Instruction Sheet 7192987 Rev. 4

Application Back-Up System (BUS) Installation Guide

Model ULT Freezers

IMPORTANT: If the freezer for which the backup system is being installed was manufactured prior to September 19, 2019, the microboard (PN: 191989) must be replaced. Failure to replace the board prior to the backup system installation will cause the system not to function properly. Please contact customer service to have the required microboard replaced. ▲

Note Included in the Back-Up System hardware bag is a DIN477 brass nut. This nut REPLACES the standard nut when connecting the back-up system to a CO2 tank, in European countries. Replace when required. ▲

Warning Before starting installation of the BUS, make sure the power to the freezer is disconnected, the battery switch is turned off (O) and the freezer has warmed to ambient temperature. ▲

Warning Working with CO_2 or LN_2 can be dangerous. Refer to the information at the back of this instruction sheet before starting this perocedure. ▲

The built-in BUS (back up system) maintains the freezer chamber temperature below the critical level in the event of a power or equipment failure. If power to the freezer fails, or temperature increases to the back up set point, the BUS injects liquefied gas into the chamber to keep the chamber temperature within the specified range.

Thermo SCIENTIFIC

The BUS operates on an internal 12-volt, rechargeable battery which is kept charged during normal operation by the integral battery charger.

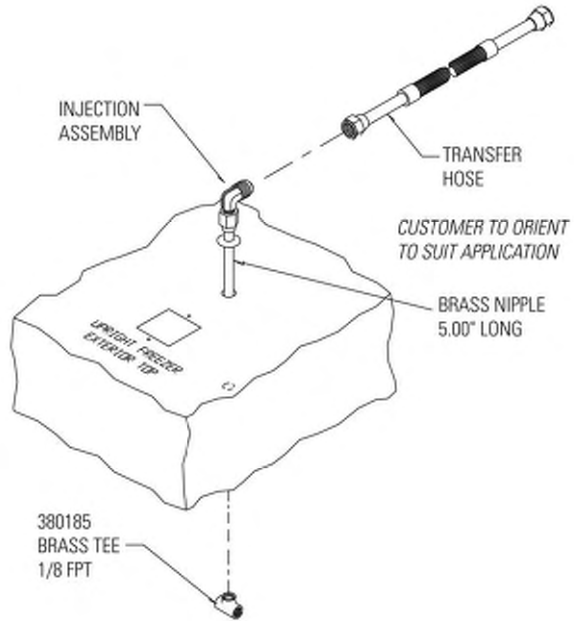

Note *Installation instructions for chest freezers begin on page 7.* ▲

Figure 1. BUS

Install Vent Stack, Solenoid & Inj. Tee - Upright Freezers

1. Install the injection assembly through the 1/2” pre-punched hole, directly behind the 2” vent stack hole in the center of the chamber ceiling. Using a long blade screwdriver or similar instrument, punch a guide hole up through the foam insulation to the top exterior ceiling opening.

Caution Do not use injection assembly to bore hole. Injection assembly could become clogged with insulation and not function correctly. ▲

Note Cover the open end of injection assembly with tape to keep insulation from entering the nipple.

2. Slide 3/8” flatwasher over open end of nipple.

3. Insert the covered end of the injection assembly through exterior hole.

4. Remove the tape covering from the end of the nipple and install the 1/8” NPT brass tee on the open end of the nipple. Place Permagum sealant between the brass tee and the interior top.

Install Vent Stack, Solenoid & Inj. Tee - Upright Freezers (cont.)

5. Use the 1-3/8" x 20" copper tubing. Remove the plastic cap from the beveled end (Caution - it is sharp!) and place the cap on the non-beveled end. Position the beveled end of the tubing against the foam opening and use a back and forth twisting motion to cut a hole through the insulation to the top external opening.

6. Remove the two Phillips head screws securing the metal bracket on the vent stack assembly.

7. Install the vent stack through the opening and secure it to the top of the freezer, using screws.

8. Go to the interior and seal around the end of the vent stack with Permagum.

9. Install the transfer hose connecting one end to the injection assembly, the other end to the solenoid valve. Install the solenoid valve to the supply source.

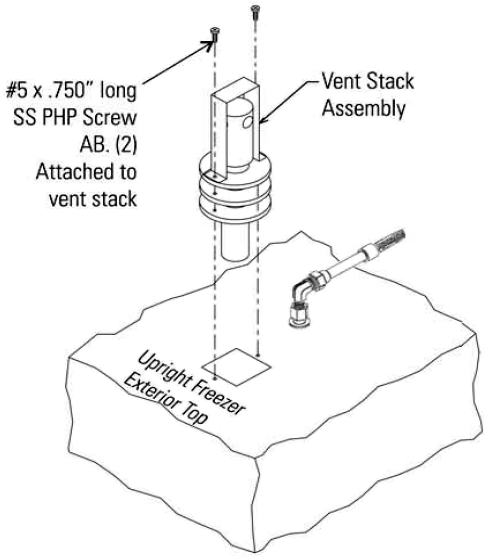

Figure 2. Vent Stack Assembly

Caution When selecting a CO_2 supply cylinder, it must be equipped with a siphon tube. ▲

Install BUS Control Board and Panel Overlay

1. Remove the top three screws securing the left (facing the freezer) side panel. Loosen the bottom three screws to obtain access to the micro board. The micro board (Figure 3) is located on the left, near the back of the freezer base.

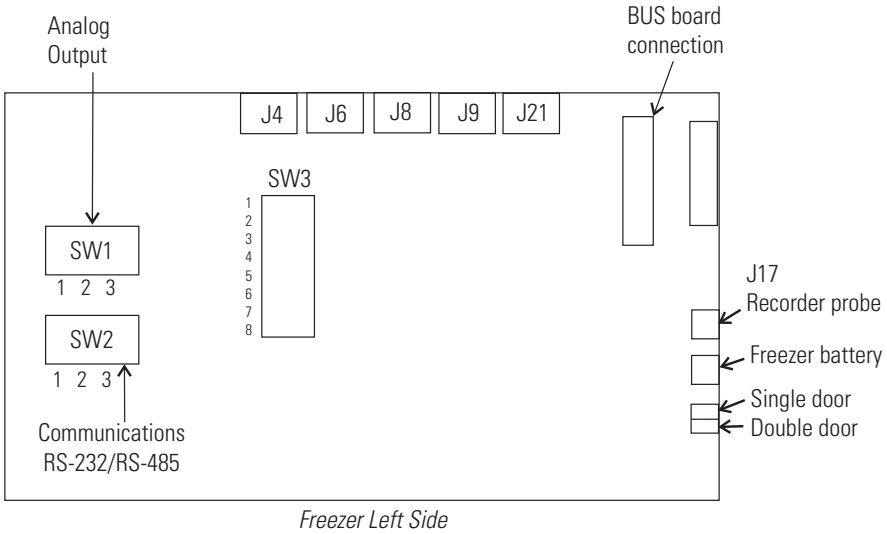

Figure 3. Microboard

Install BUS Control Board and Panel Overlay (cont.)

2. Install the BUS control board onto the bracket supplied. Mount the bracket above the micro board with screws. Refer to Figure 4.

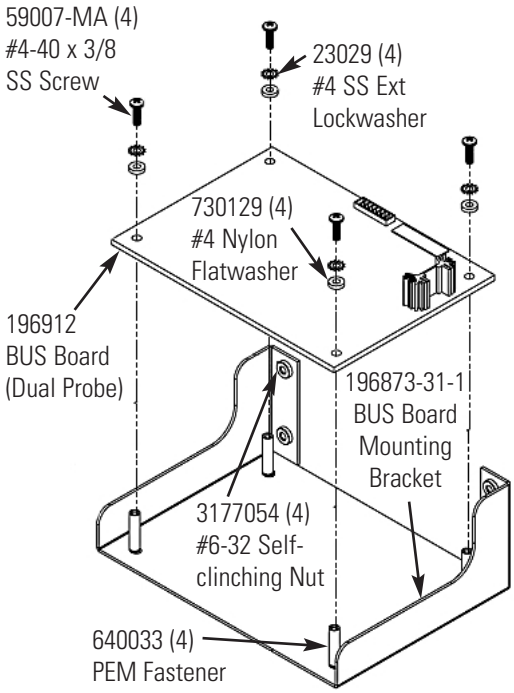

Figure 4. Board to Bracket

3. For Hysteresis & Dual probe fault mode settings (Figure 5), locate Jumper J17 near to solenoid/ sensor connector (J1), refer to table below for operation details:

PWM mode: If both probes fail, the solenoid will activate peridically, allowing the flow of refrigerant (CO2 or LN2).
Non-PWM mode: If both probes fail, the solenoid remains OFF and no refrigerant will flow.

Jumper PIN	Status	Hysteresis	Dual Probe Fault Mode
J17 PIN 1 & PIN 2	Short Together/ Jumper Cap Installed	5°C	Non-PWM Mode
J17 PIN 1 & PIN 2	Open/No-Jumper Installed	9°C	PWM Mode

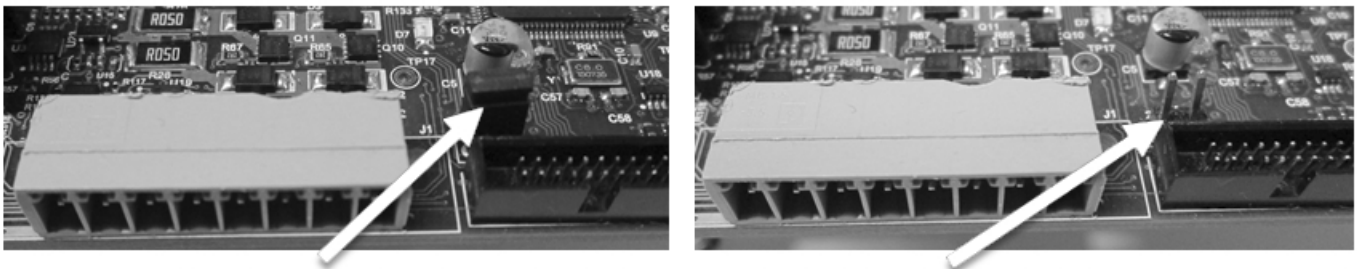

Figure 5. Jumper Cap for Hysteresis & Dual Probe Fault Mode Selection

Install BUS Control Board and Panel Overlay (cont.)

4. Connect BUS control board to the micro board with the ribbon cable.

5. Install the BUS battery. Open the lower door by grasping the bottom left corner. The battery location is the front left corner of the compressor compartment. Locate the freezer battery. If the freezer battery is secured with a mounting bracket and wing nuts as shown in Figure 6, proceed to Step 7.

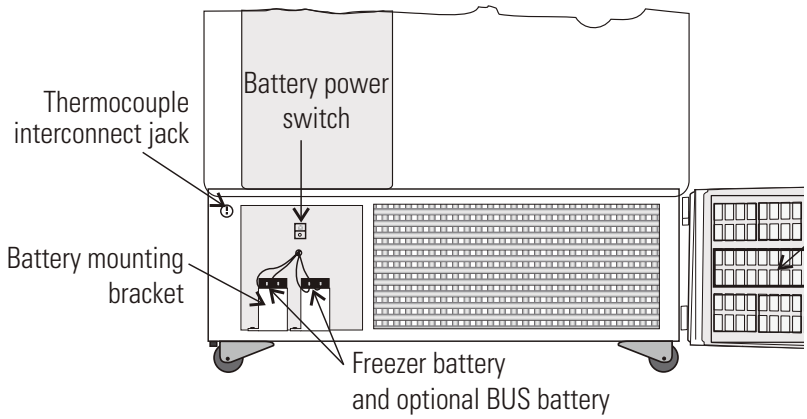

Figure 6. Battery Location

6. Install the battery bracket supplied with this kit. The bracket has two pieces. Locate the mounting holes on the compartment floor next to the freezer battery. Secure each piece of the bracket to the compartment floor with a screw. Place supplied gasket in between brackets on floor. Install the battery with the terminals facing the front and exposed. Install nylon cable tie around battery and brackets. Proceed to Step 7.

7. Directly above the battery(s) is the battery power switch. The battery power switch should be in the Off position (O). Remove the three nuts securing the battery bracket. Remove the bracket. Install the battery and secure (see Figure 6).

8. Install the BUS wiring harness. Plug the keyed connection end into the BUS control board. Route the wires forward through the freezer base to the panel containing the battery switch. Connect the white wire to the bottom tab, red wire to the middle tab, and black wire to the top tab of the battery switch.

9. Route the terminal connections through the panel to the battery. Connect the battery terminal wires (red to positive and black to negative).

10. At the freezer front door, remove six screws holding the control bezel in place.

Install BUS Control Board and Panel Overlay (cont.)

11. Remove the six screws securing the control panel display board.
12. Plug the BUS overlay onto display board. The BUS control panel is connected at the bottom of the freezer display panel. Align the three stand-offs and the 6 pin connector on the BUS panel and connect. The 6 pin connector does not fully seat.
13. Remove two screws securing BUS panel cover. Discard cover & screws.
14. Re-install the display board.
15. Replace the control bezel and secure.

Install Temperature Probe

1. Locate the 0.500” pre-punched hole in the upper left hand back corner of the chamber ceiling. Using a screwdriver, or similar instrument, punch a guide hole up through the foam insulation to the top external opening.
2. Remove the tie wrap securing the coiled probe/solenoid harness. Uncoil the probe lead and run the probe tip (approximately 12”) down through 0.500” porthole (Figure 8).
3. As shown in Figure 7, thread the small tie wrap through the openings in the front of the bracket. Secure the probe on the back of the bracket with the tie wrap.
4. Tap #8-32 the two pre-punched holes located on the interior left wall of the freezer. Mount the bracket. Figure 8 shows the Back-Up probes mounted on the interior left side wall of the freezer.

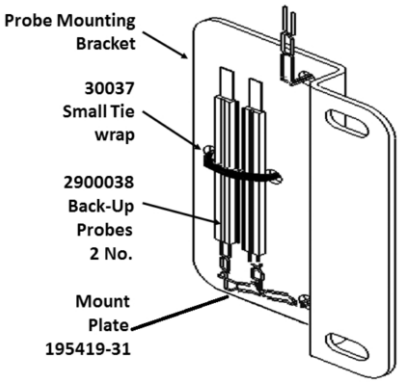

Figure 7. BUS Probes Mounting

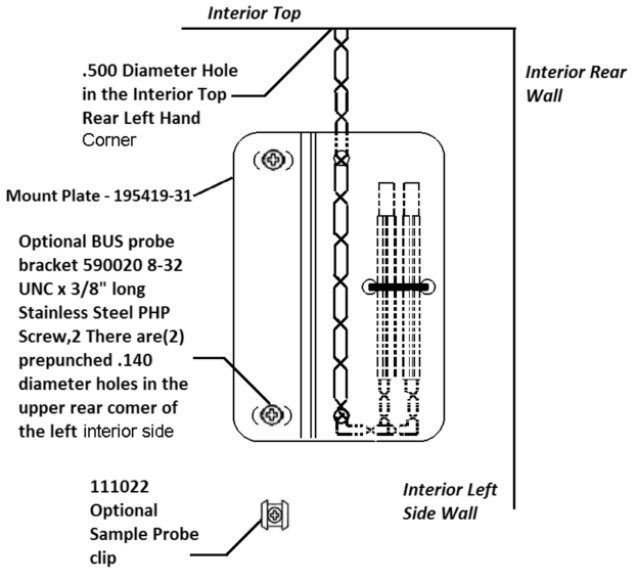

Figure 8. Bus Probes Bracket Installation

Connect the Probe/Solenoid Harness

1. Remove the four screws on the freezer back panel and use them to mount the tie wrap anchors as shown in Figure 10. Secure the two probe assembly wires with tie wraps.

2. Plug the solenoid/probe connector into the BUS connection and secure with a screw on the right and left side (Figure 9). The connector is keyed.

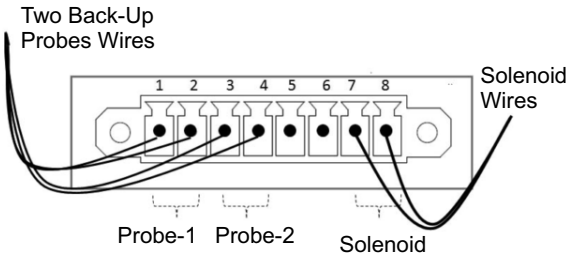

Figure 9. Probe Wires

3. Loosen the terminal screws on the solenoid. Slide the spade lug connectors under the screws. Tighten to secure.

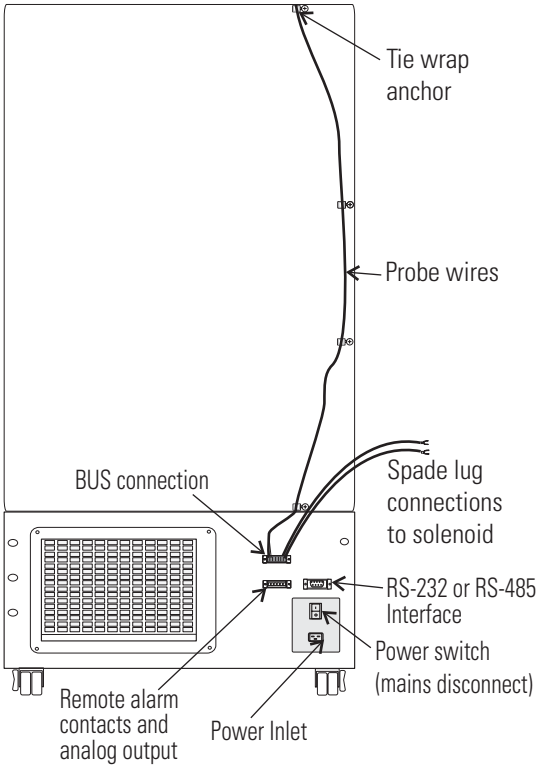

Figure 10. BUS Connections

4. Connect power to the freezer. Turn the freezer On, with the battery switch Off (O).

   a. **Arming on Power On**

   The arming function occurs only one time at initial power-on. It may occur in 3 ways; BUS timeout arming, both sensors fail and BUS temperature sensor arming.

   At power-on, the BUS will perform a Hold-off period check. The BUS will not inject the refrigerant for a Hold-off period, calculated as follows:

   <u>Hold-off period:</u>
   - 12 hour is between 0 and +70C
   - 12 hour is between 0 and (BUS Setpoint - Hysteresis)
   - 0 hours is below (BUS Setpoint - Hysteresis)
   - 0 hours is temperature Out Of Range or both probes fail.

   b. The Low Battery indicator may also illuminate.

5. Turn the battery switch to Standby mode (⏻) to charge both batteries.

6. Allow the unit to stabilize.

Connect the Probe/Solenoid Harness (cont.)

Caution The back-up system is designed to inject refrigerant (CO_2 or LN_2). In the unlikely event of both probes failing, the back-up system will operate in PWM or Non-PWM mode based on jumper setting (Figure 5). ▲

Note The solenoid will not engage if lid is open. ▲

Confirm System Readiness: After the BUS is fully installed and cycled through the Hold-off period, perform the following checks:

- Confirm the battery is charging
- Verify solenoid operation by performing a Press-to-Test operation
- Check the system for fault codes in accordance with BUS Display instructions (page 14).

Test the BUS: After the freezer has stabilized and both batteries are fully charged, the BUS can be tested to verify proper operation.

1. Disconnect the AC power to the freezer by turning power switch off.
2. As the freezer warms up, verify the BUS injects at the desired temperature. Displayed temperature may vary by a few degrees from inject temperature due to the differences in probe locations.

Preventive Maintenance - Monthly maintenance action to check CO_2 or LN_2 back-up system operation, and battery voltage.
- Check for fault codes on the BUS probe per Table 1 (page 15). Also verify solenoid operation by performing a Press-To-Test.

Install Injection Assembly on Chest Freezers

1. Locate the mounting hole for installing the injection tee assembly. See Figure 11. Using a long blade screwdriver or similar instrument, punch a guide hole through the foam insulation to back exterior wall opening.

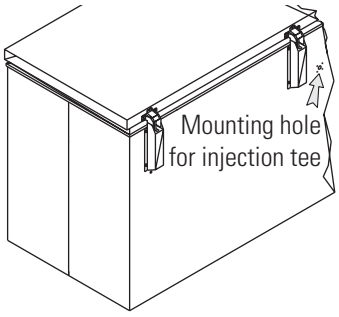

Figure 11. Mounting Hole

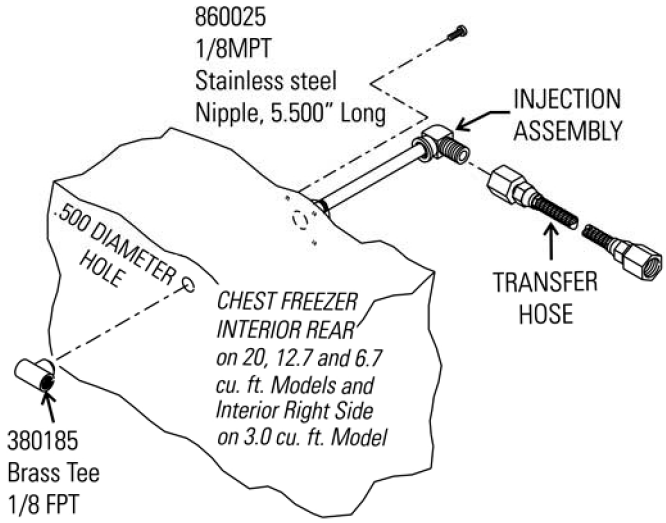

Figure 12. Injection Assembly

Install Injection Assembly on Chest Freezers (cont.)

Caution Do not use injection assembly to bore hole. Injection assembly could become clogged with insulation and not function correctly. ▲

Note Cover the open end of injection assembly with tape to keep insulation from entering the nipple. ▲

2. Slide 3/8” flatwasher over open end of nipple.
3. Insert the covered end of the injection assembly through exterior hole.
4. Remove the tape covering from the end of the nipple and install the 1/8” NPT brass tee on the open end of the nipple. Place Permagum sealant between the brass tee and the interior top.
5. Go to the interior and seal around end of vent stack with Permagum.
6. Install the transfer hose connecting one end to the injection assembly, the other end to the solenoid valve. Install the solenoid valve to the supply source.

Note The solenoid will not engage if lid is open.

Caution When selecting a CO_2 supply cylinder, it must be equipped with a siphon tube. ▲

Install the BUS Control Board on Chests

1. **3.0 and 6.7 cu. ft. units:** Remove the top three screws securing the left (facing the freezer) side panel. Loosen the bottom three screws to obtain access to the micro board. The micro board (Figure 13) is located on the left, near the back of the freezer base.

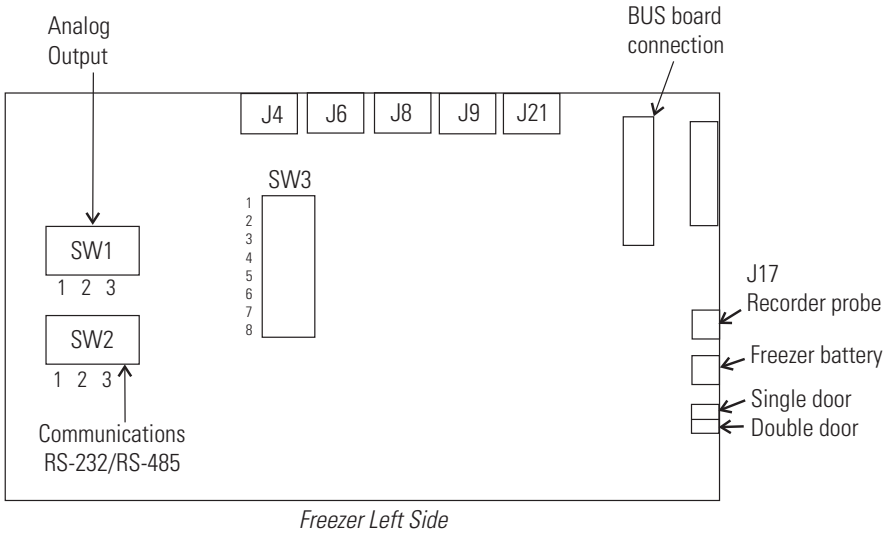

Figure 13. Microboard

Install the BUS Control Board on Chests (cont.)

PWM mode: If both probes fail, the solenoid will activate peridically, allowing the flow of refrigerant (CO2 or LN2).
Non-PWM mode: If both probes fail, the solenoid remains OFF and no refrigerant will flow.

2. Install the BUS control board onto the bracket supplied. Mount the bracket above the micro board with screws. See Figure 14.

3. For Hysteresis & Dual probe fault mode settings (Figure 15), locate Jumper J17 near to solenoid/sensor connector (J1), refer to the following table for operation details:

Jumper PIN	Status	Hysteresis	Dual Probe Fault Mode
J17 PIN 1 & PIN 2	Short Together/ Jumper Cap Installed	5°C	Non-PWM Mode
J17 PIN 1 & PIN 2	Open/No-Jumper Installed	9°C	PWM Mode

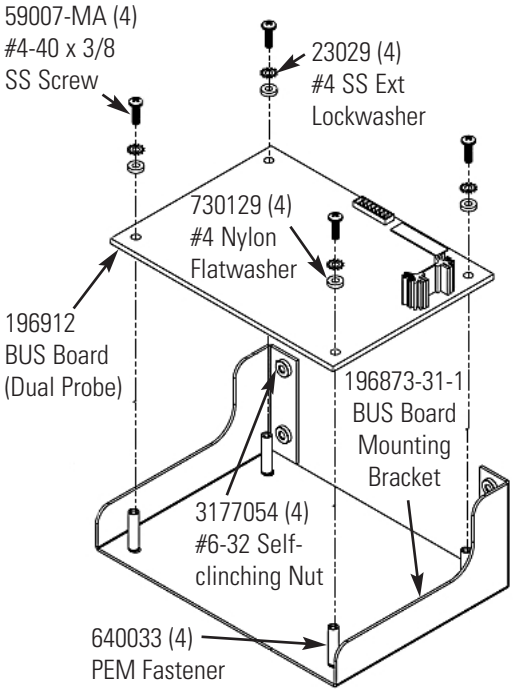

Figure 14. Board to Bracket

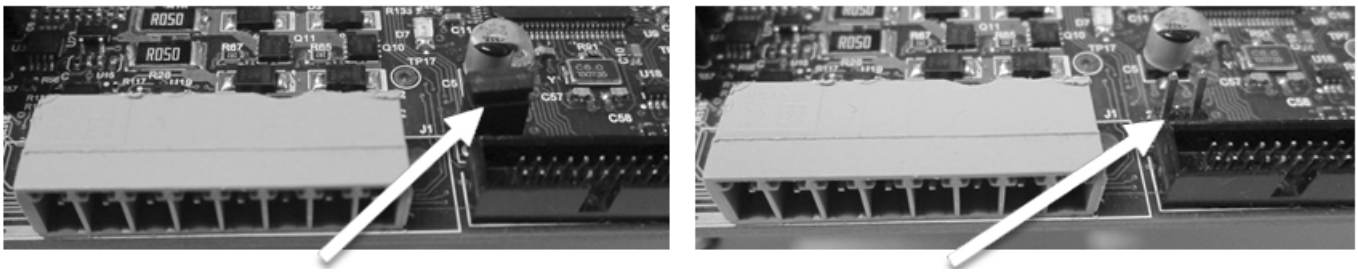

Figure 15. Jumper Cap for Hysteresis & Dual Probe Fault Mode Selection

4. Connect the BUS control board to the micro board with the ribbon cable (Figure 13).

5. The battery power switch is located in the front of the freezer. Open the lower door by grasping the bottom left corner. Verify that the battery power switch is in the Off position (O).

6. Install the BUS battery. Remove the screws securing the back grille. Remove the two nuts securing the battery bracket. Remove the bracket. Install the battery and secure (see Figure 16).

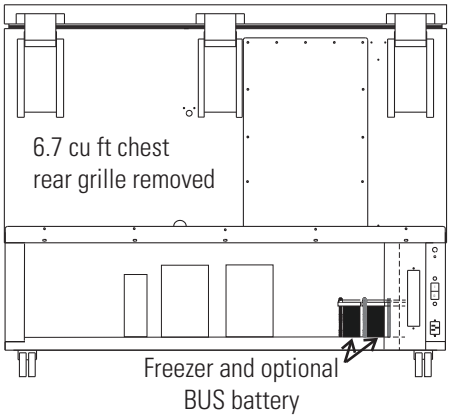

Figure 16. Location of Batteries

Install the BUS Control Board on Chests (cont.)

7. Install the BUS wiring harness. Plug the keyed connection end into the BUS control board. Route the wires forward through the freezer base to the panel containing the battery switch. Connect the white wire to the bottom tab, red wire to the middle tab, and black wire to the top tab of the battery switch.

8. Route the terminal connections through the panel to the battery. Connect the battery terminal wires (red to positive and black to negative).

Proceed to CONTROL PANEL OVERLAY on Page 12.

9. **12.7 and larger cu. ft. units:** Remove the screws securing the side panel. Remove the rear access plate.

10. The micro board is located on the left, near the back of the freezer sidecar above the relay enclosure.

11. Install the BUS control board onto the bracket supplied. Mount the bracket perpendicular to the micro board with screws. See Figure 19. Connect the BUS control board to the micro board with the ribbon cable (see Figure 13). Ensure correct orientation of the J17 jumper cap (see Figure 15).

12. Open the lower door by grasping the bottom left corner. Turn the battery switch off.

13. Install the BUS battery. The battery location is near the front of the freezer, accessed through the sidecar. The freezer and BUS battery are secured in place by a mounting bracket with three wing nuts. Remove the three nuts securing the battery bracket. Remove the bracket. Install the battery and secure.

14. Install the BUS wiring harness. Plug the keyed connection end into the BUS control board. Route the wires forward through the freezer base to the panel containing the battery switch. Connect the white wire to the bottom tab, red wire to the middle tab, and black wire to the top tab of the battery switch.

15. Route the terminal connections through the sidecar to the battery. Connect the battery terminal wires (red to positive and black to negative).

Install the Control Panel Overlay on Chests

1. At the freezer front, remove the screws securing the control bezel.
2. Remove the six screws securing the control panel display board.
3. Remove the two screws securing the BUS panel cover. Discard cover and screws.
4. Plug the BUS overlay onto the display board. The BUS control panel is connected at the bottom of the freezer display panel. Align the three stand-offs and the 6 pin connector on the BUS panel and connect. The 6 pin connector does not fully seat.
5. Re-install the display board.
6. Replace the control bezel and secure.

Install Temp Probe/ Solenoid Harness - Chests

1. Plug the solenoid/probe connector into the BUS connection. Loop the probe wire back into the base/side car. Secure the ends of the connector with a screw. The connector is keyed.

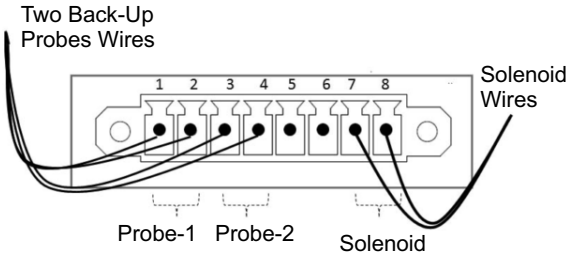

Figure 17. Probe Wires

2. Route the temp probe through the interior probe port. The probe port is located in the upper right corner of 12.7, 17 and 20 cu. ft. models, and in the lower right corner (viewed from the back) of 3.0 and 6.7 cu. ft. models.
3. Carefully remove the existing Permagum sealant from around the probe port opening.
4. Open the freezer lid and locate the probe cover on the upper front left wall. Remove the two Phillips head screws securing the probe cover (see Figure 18).
5. Carefully remove the Permagum sealant from the interior probe port opening. Route the two BUS probes through the probe port, approximately 12” (Figure 19). Secure the two back-up probes to the temperature probe using a small tie wrap (Figure 18).

Install Temp Probe/ Solenoid Harness - Chests (cont.)

6. Seal around the interior and exterior opening of the probe port with Permagum sealant.

7. Install the probe cover (Figure 18).

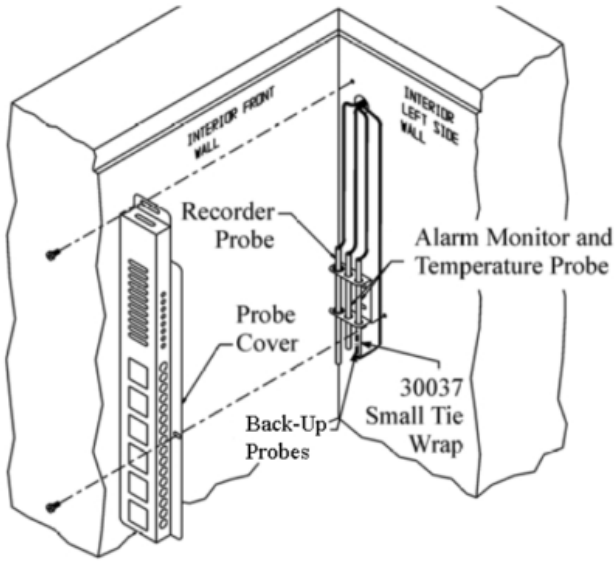

Figure 18. Probes

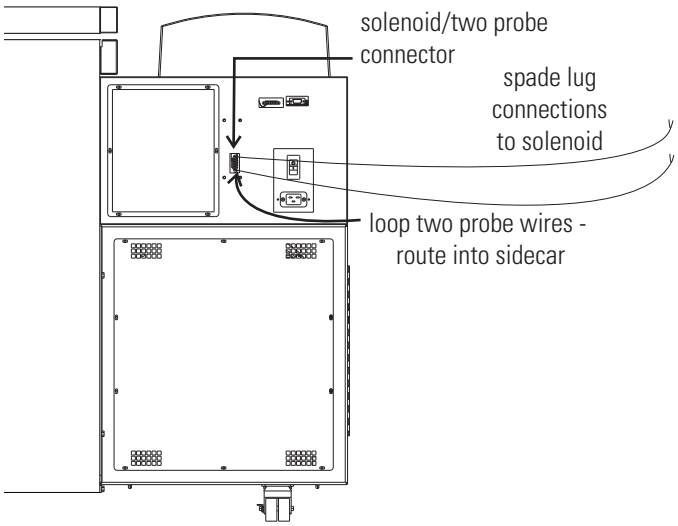

Figure 19. Connections

8. Carefully coil the extra probe lead in the compressor compartment, and secure it to the compartment wall with a tie wrap and tie wrap anchor provided. Additional tie wraps and anchors may be used to secure the probe lead to the exterior back wall of the freezer.

9. Replace the Permagum seal in the probe access port and install the probe cover.

10. Loosen the terminal screws on the solenoid. Slide the spade lug connectors under the screws and tighten to secure.

11. Plug the solenoid/probe connector into the BUS connection and secure with a screw on the right and left side (Figure 17). The connector is keyed.

12. Connect power to the freezer. Turn the freezer On, with the battery switch Off (O).

    a. Arming on Power On

    The arming function occurs only one time at initial power-on. It may occur in 3 ways; BUS timeout arming, both sensors fail and BUS temperature sensor arming.

    At power-on, the BUS shall perform a Hold-off period check. The BUS will not inject the refrigerant for a Hold-off period, calculated as follows:

Install Temp Probe/ Solenoid Harness - Chests (cont.)

Hold-off period:

- 12 hour is between 0 and +70°C
- 12 hour is between 0 and (BUS Setpoint - Hysteresis)
- 0 hours is below (BUS Setpoint - Hysteresis)
- 0 hours is temperature Out Of Range or both probes fail.

b. The Low Battery indicator may also illuminate.

13. Turn the battery switch to Standby mode (⏻) to charge both batteries.

14. Re-install all panels.

Caution Make sure the pressure relief valve on any LN_2 tank is adjusted to 30 PSI maximum blow-off. ▲

Caution The back-up system is designed to inject refrigerant (CO_2 or LN_2). In the unlikely event of both probes failing, the back-up system will operate in PWM or Non-PWM mode based on jumper setting (Figure 15). ▲

Note The solenoid will not engage if lid is open. ▲

Confirm System Readiness: After the BUS is fully installed and cycled through the Hold-off period, perform the following checks:

- Confirm the battery is charging
- Verify solenoid operation by performing a Press-to-Test operation
- Check the system for fault codes in accordance with BUS Display instructions (page 14).

Test the BUS: After the freezer has stabilized and both batteries are fully charged, the BUS can be tested to verify proper operation.

1. Disconnect the AC power to the freezer by turning power switch off.
2. As the freezer warms up, verify the BUS injects at the desired temperature. Displayed temperature may vary by a few degrees from inject temperature due to the differences in probe locations.

Preventive Maintenance - Monthly maintenance action to check CO_2 or LN_2 back-up system operation, and battery voltage.
- Check for fault codes on the BUS probe per Table 1 (page 15). Also verify solenoid operation by performing a Press-To-Test.

BUS Display

The BUS PCB will use the new display (Figure 20). The upgrade procedure will add capability to the existing control panel display to show fault codes and still perform the solenoid test function.Changes to the BUS set points and CO_2/LN_2 gas are made through the control panel display. After the PCB has received a change, the setting is retained within the board until a subsequent change is initiated. Refer to the freezer operating manual for more details on the BUS configuration changes.

Figure 20. BUS Display

1. Normal Operation

- Low Battery: Illuminates only after a battery test which occurs every 8 hours. The battery test is a loaded test and during the test, the battery voltage is monitored. When the battery voltage is less than a certain threshold, this light will illuminate and stay illuminated until the next battery test.
- Solenoid Engaged: Illuminates any time the controller is activating the solenoid. Illumination will only occur when the controller senses the solenoid is active and calling for injection.

2. Fault Code

   This same user interface will also permit fault codes to be easily viewed when the user presses and releases the Press to Test button in less than 2 seconds. When this occurs, both the Low Battery LED and Solenoid Engaged LED will blink twice ON/OFF quickly indicating that fault code display mode is active. For the next ~10 seconds, the fault codes will be displayed as shown in the table below. The display shows only the lower number fault code until that fault is resolved.

Low Battery LED	Solenoid Engaged LED	Fault Code Number	Fault Code Definition
OFF	OFF	0	Normal Operation
OFF	Blinks 1 time	1	Primary Probe Failure
OFF	Blinks 2 times	2	Secondary Probe Failure
OFF	Blinks 3 times	3	Solenoid Driver Failure
OFF	Blinks 4 times	4	Low Tank

Table 1. BUS Fault Codes

Each blink will take one second, with half of the second interval being ON (illuminated) and the other half of the second interval being OFF. After the sequence concludes, both the Low Battery LED and the Solenoid Engaged LED will flash four times ON/OFF quickly to indicate a return to normal display.

BUS Display (cont.)

3. BUS Injection Test

   The user must press and hold the Press-to-Test button for >= 2 seconds before injection occurs. After the Press-to-Test button is pressed for >30 seconds, the solenoid will turn off. This will avoid a button or button signal becoming stuck in an active condition.

   During a Press-to-Test injection, if either RTD #1 or RTD #2 reads a temperature less than 20^{0}C below BUS set point and it is determined to be a valid input, then injection will terminate immediately.

4. BUS Set point "Validation" Feedback

   Whenever the BUS set point or working fluid changes, the BUS acknowledges the set point acceptance by causing the Low Battery LED and Solenoid Engaged LED to blink three times ON/OFF quickly. This does not imply that the BUS error-checked the values, other than that the value received was within the range of the BUS working correctly with prior programming.

Specifications

Temperature Range for BUS board

0°C (32°F) to -75°C (-103°F) in an 18°C to 32°C * (64.4°F to 89.6°F) ambient.

Electrical Power supply for existing compatible

+14V from ULT main control board

Note For freezer specifications, refer to freezer operating manual.

Intended Use The BUS board is a board that acts as a backup source of cooling control for the system. In the event of an AC power failure, or other loss of mechanical cooling capacity due for instance due to compressor failure, the Backup System (BUS) will inject LN2 or CO2 into the cabinet and maintain cooling for some time. The BUS board operates completely independent from other boards in the system in the event of failure of any or all of the other boards. They are intended to be used for controlling the cabinet temperature when main system fails. This unit is an accessory to a cold storage device.

Non-intended Use The BUS system may not be operated in potentially explosive areas. The devices are not intended to interface with model other than specified.

Appendix A Handling Liquid CO_2

Warning High concentrations of CO_2 gas can cause asphyxiation! OSHA Standards specify that employee exposure to carbon dioxide in any eight-hour shift of a 40-hour work week shall not exceed the eight-hour time weighted average of 5000 PPM (0.5% CO_2). The short term exposure limit for 15 minutes or less is 30,000 PPM (3% CO_2). Carbon dioxide monitors are recommended for confined areas where concentrations of carbon dioxide gas can accumulate. ▲

Store and use liquid CO_2 only in a well-ventilated place.

As the liquid evaporates, the resulting gas tends to displace the normal air from the area. In closed areas, excessive amounts of CO_2 gas reduce the concentration of oxygen and can result in asphyxiation. Because CO_2 gas is colorless, odorless and tasteless, it cannot be detected by the human senses and will be breathed as if it were air. Breathing an atmosphere that contains less than 18% oxygen can cause dizziness and quickly result in unconsciousness and death.

Note The cloudy vapor that appears when liquid CO_2 is exposed to the air is condensed moisture; not the gas itself. The issuing gas is invisible.

Never dispose of liquid CO_2 in confined areas or places where others may enter.

Disposal of liquid CO_2 should be done outdoors in a safe place. Pour the liquid slowly on gravel or bare earth where it can evaporate without causing damage. Do not pour the liquid on pavement.

Appendix B Handling Liquid Nitrogen

Warning Contact of liquid nitrogen or cold gas with the skin or eyes may cause serious freezing (frostbite) injury. ▲

Handle liquid nitrogen carefully.

The extremely low temperature can freeze human flesh very rapidly. When spilled on a surface the liquid tends to cover it completely and intimately, cooling a large area. The gas issuing from the liquid is also extremely cold. Delicate tissue, such as that of the eyes, can be damaged by an exposure to the cold gas which would be too brief to affect the skin of the hands or face.

Never allow any unprotected part of your body to touch objects cooled by liquid nitrogen.

Such objects may stick fast to the skin and tear the flesh when you attempt to free yourself. Use tongs to withdraw objects immersed in the liquid, and handle the object carefully.

Wear protective clothing.

Protect your eyes with a face shield or safety goggles (safety glasses without side shields do not give adequate protection). Always wear gloves when handling anything that is, or may have been, in immediate contact with liquid nitrogen. Insulated gloves are recommended, but heavy leather gloves may also be used. The gloves should fit loosely, so that they can be thrown off quickly if liquid should splash into them. When handling liquid in open containers, it is advisable to wear high-top shoes. Trousers (which should be cuffless if possible) should be worn outside the shoes.

Introduction

The safe handling and use of liquid nitrogen in cryogenic refrigerators and dewar flasks is largely a matter of knowing the potential hazards and using common-sense procedures based on that knowledge. There are two important properties of liquid nitrogen that present potential hazards:

1. It is extremely cold. At atmospheric pressure, liquid nitrogen boils at -320°F (-196°C).

2. Very small amounts of liquid vaporize into large amounts of gas. One liter of liquid nitrogen becomes 24.6 cu. ft. (700l) of gas.

The safety precautions in this booklet must be followed to avoid potential injury or damage which could result from these two characteristics. Do not attempt to handle liquid nitrogen until you read and fully understand the potential hazards, their consequences, and the related safety precautions. Keep this booklet handy for ready reference and review.

Note Because argon is an inert gas whose physical properties are very similar to those of nitrogen, the precautions and safe practices for handling and use of liquid argon are the same as those for liquid nitrogen.

Use only containers designed for low temperature liquids.

Cryogenic containers are specifically designed and made of materials that can withstand the rapid changes and extreme temperature differences encountered in working with liquid nitrogen. Even these special containers should be filled SLOWLY to minimize the internal stresses that occur when any material is cooled. Excessive internal stresses can damage the container.

Do not cover or plug the entrance opening of any liquid nitrogen refrigerator or dewar. Do not use any stopper or other device that would interfere with venting of gas.

These cryogenic liquid containers are generally designed to operate with little or no internal pressure. Inadequate venting can result in excessive gas pressure which could damage or burst the container. Use only the loose-fitting necktube core supplied or one of the approved accessories for closing the necktube. Check the unit periodically to be sure that venting is not restricted by accumulated ice or frost.

Use proper transfer equipment.

Use a phase separator or special filling funnel to prevent splashing and spilling when transferring liquid nitrogen into or from a dewar or refrigerator. The top of the funnel should be partly covered to reduce splashing. Use only small, easily-handled dewars for pouring liquid. For the larger, heavier containers, use a cryogenic liquid withdrawal device to transfer liquid from one container to another. Be sure to follow instructions supplied with the withdrawal device. When liquid cylinders or other large storage containers are used for filling, follow the instructions supplied with those units and their accessories.

Do not overfill containers.

Filling above the bottom of the necktube (or specified maximum level) can result in overflow and spillage of liquid when the necktube core or cover is placed in the opening.

Never use hollow rods or tubes as dipsticks.

When a warm tube is inserted into liquid nitrogen, liquid will spout from the top of the tube due to gasification and rapid expansion of liquid inside the tube.

Warning Nitrogen gas can cause suffocation without warning! ▲

Store and use liquid nitrogen only in a well-ventilated place.

As the liquid evaporates, the resulting gas tends to displace the normal air from the area. In closed areas, excessive amounts of nitrogen gas reduce the concentration of oxygen and can result in asphyxiation. Because nitrogen gas is colorless, odorless and tasteless, it cannot be detected by the human senses and will be breathed as if it were air. Breathing an atmosphere that contains less than 18% oxygen can cause dizziness and quickly result in unconsciousness and death.

Note The cloudy vapor that appears when liquid nitrogen is exposed to the air is condensed moisture; not the gas itself. The issuing gas is invisible.

Never dispose of liquid nitrogen in confined areas or places where others may enter.

Disposal of liquid nitrogen should be done outdoors in a safe place. Pour the liquid slowly on gravel or bare earth where it can evaporate without causing damage. Do not pour the liquid on pavement.

Appendix C First Aid

If a person seems to become dizzy or loses consciousness while working with liquid nitrogen or carbon dioxide, move to a well-ventilated area immediately. If breathing has stopped, apply artificial respiration. If breathing is difficult, give oxygen. Call a physician. Keep warm and at rest.

If exposed to liquid or cold gas, restore tissue to normal body temperature (98.6° F) as rapidly as possible, followed by protection of the injured tissue from further damage and infection. Remove or loosen clothing that may constrict blood circulation to the frozen area. Call a physician. Rapid warming of the affected part is best achieved by using water at 108° F. Under no circumstance should the water be over 112° F, nor should the frozen part be rubbed either before or after rewarming. The patient should neither smoke nor drink alcohol.

Important operating and/or maintenance instructions. Read the accompanying text carefully.

Potential electrical hazards. Only qualified persons should perform procedures associated with this symbol.

Equipment being maintained or serviced must be turned off and locked off to prevent possible injury.

WEEE Compliance: Thermo Fisher Scientific has contracted with companies for recycling/disposal in each EU Member State. For further information, send an email to weee.recycle@thermofisher.com.

- ✔ Always use proper protective equipment (clothing, gloves, goggles, etc.)
- ✔ Always dissipate extreme cold or heat and wear protective clothing.
- ✔ Always follow good hygiene practices.
- ✔ Each individual is responsible for his or her own safety.

Do You Need Information or Assistance on Thermo Scientific Products?

If you do, please contact us 8:00 a.m. to 6:00 p.m. (Eastern Time) at:

1-740-373-4763	Direct
1-800-438-4851	Toll Free, U.S. and Canada
1-877-213-8051	FAX
http://www.thermofisher.com	Internet Worldwide Web Home Page
service.led.marietta@thermofisher.com	Tech Support Email Address
www.unitylabservices.com	Certified Service Web Page

Our **Sales Support** staff can provide information on pricing and give you quotations. We can take your order and provide delivery information on major equipment items or make arrangements to have your local sales representative contact you. Our products are listed on the Internet and we can be contacted through our Internet home page.

Our **Service Support** staff can supply technical information about proper setup, operation or troubleshooting of your equipment. We can fill your needs for spare or replacement parts or provide you with on-site service. We can also provide you with a quotation on our Extended Warranty for your Thermo Scientific products.

Whatever Thermo Scientific products you need or use, we will be happy to discuss your applications. If you are experiencing technical problems, working together, we will help you locate the problem and, chances are, correct it yourself...over the telephone without a service call.

When more extensive service is necessary, we will assist you with direct factory trained technicians or a qualified service organization for on-the-spot repair. If your service need is covered by the warranty, we will arrange for the unit to be repaired at our expense and to your satisfaction.

Regardless of your needs, our professional telephone technicians are available to assist you Monday through Friday from 8:00 a.m. to 6:00 p.m. Eastern Time. Please contact us by telephone or fax. If you wish to write, our mailing address is:

Thermo Fisher Scientific (Asheville) LLC
401 Millcreek Road, Box 649
Marietta, OH 45750

International customers, please contact your local Thermo Scientific distributor.

Instruction Sheet 7192987

Rev	ECR/ECN	Date	Description	By
4	ECNM-000533	09/19/19	Important note regarding microboard was added.	TFI
3	41370	10/20/17	BUS update	bpg
2	41299	11/4/16	Safety information added	ccs
1	40374	8/29/16	Updates	ccs
0	40374	6/27/16	Original	ccs