Installation and Operation Manual

Thermo Scientific® Harris MBF-700 Refrigeration System

Part of Thermo Fisher Scientific

Thermo SCIENTIFIC

TABLE OF CONTENTS

SECTION 1 – INTRODUCTION

In this manual and on labels attached to this product, the words WARNING and CAUTION mean the following:

- WARNING: a potentially hazardous situation which, if not avoided, could result in serious injury or death.
- CAUTION: a potentially hazardous situation which, if not avoided, may result in minor or moderate injury or damage to the equipment.

Before installing, using or maintaining this product, please be sure to read this manual and product warning labels carefully. Failure to follow these instructions may cause this product to malfunction, which could result in injury or damage.

SAFETY CONSIDERATIONS

Below are important safety precautions that apply to this product:

- Use this product only in the way described in the product literature and in this manual. Before using it, verify that this product is suitable for its intended use.
- Do not modify system components, especially the controller. Use OEM exact replacement equipment or parts. Before use, confirm that the product has not been altered in any way.
- Your unit must be properly grounded in conformity with national and local electrical codes. Never connect the unit to overloaded power sources.
- Disconnect the unit from all power sources before cleaning, troubleshooting, or performing other maintenance on the product or its controls.

GENERAL CONSTRUCTION

The MBF-700 is a low temperature freezer designed to operate with a chamber temperature in the range of–65 to –85 °C. (-85 to –121 °F.)

The cabinet configuration is that of a rectangular solid measuring 121” long (307.3cm) x 47.5” high (120.7cm) with lid and all covers in place x 35.312” deep (89.7cm). When installing the freezer, a minimum of six inches (6”) must be provided on all sides of the freezer for proper air circulation.

Weight is 1510 lbs. (684.8Kg) net.
Shipping weight is 1790 lbs (811.8Kg).

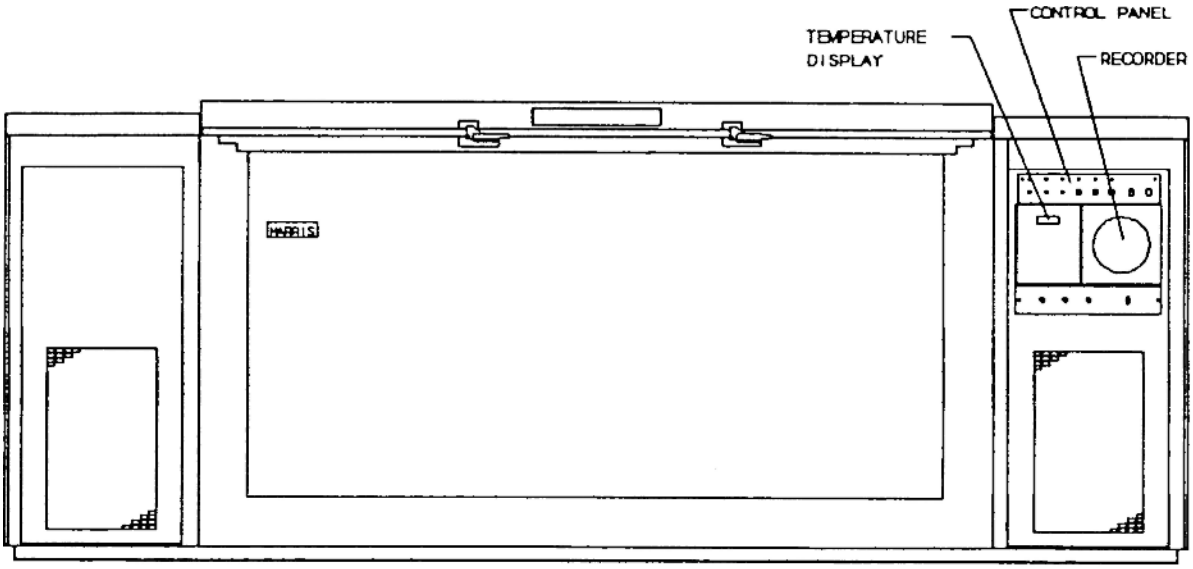

Figure 1 .General Freezer Outline
(see Figure 3for control panel details)

The interior useable space is also rectangular. The four corners are coved. With insulating sub lids in place it measures 71” long (180.3cm) x 35.37” high (89.9cm) x 22.63” deep (57.5cm). The interior volume is 31 Ft. (878.7 liters.)

The cabinet is insulated with nominal 5” of foamed-in-place polyurethane insulation.

CAUTION	Do not discard the sub lids. They are necessary for the operation of the unit.

The refrigeration arrangement employed in this freezer is a specially designed assembly using four semi- hermetic motor compressors. This design is termed a “redundant cascade system”. Stainless steel storage racks for inventory control are available as an option and must be ordered separately.

The lid is held tightly closed by means of cam locks having provision for a user supplied padlock.

Durable corrosion protection is provided by an electrostatically applied epoxy fused powder coating over cold rolled steel.

To provide a redundant refrigeration system, the inner tank is double wrapped with copper tubing forming a dual circuit evaporator. In addition, each of these circuits has its own compressor, condenser and liquid refrigerant control (capillary tube). Each of the redundant systems will support full operation to maintain the storage temperature. When set to alternate between system “A” and system “B”, refrigeration is applied to the freezer chamber alternating between systems on each cycle.

SECTION 2 – RECEIVING AND UNPACKING

At delivery, examine the exterior for physical damage while the carrier's representative is present. If exterior damage is present, carefully unpack and inspect the unit and all accessories for damage. If there is no exterior damage, unpack and inspect the equipment within five days of delivery. If you find any damage, keep the packing materials and immediately report the damage to the carrier. Do not return goods to Thermo Scientific without written authorization. *When submitting a claim for shipping damage request that the carrier inspect the shipping container and equipment.*

RECEIVING

Note: Do not discard the sublids from chest-style units. The sublids are necessary to maintain correct temperature, moisture control, and economy of operation.

UNPACKING

The tools necessary for unpacking are:

- Hammer
- Small pinch bar
- Nail puller (handy but not required)
- Side cutting pliers

CAUTION: Do not tip the unit over or stand it on end. Call the factory first for specific instructions if unit absolutely must be tipped on end.

There are two Tiltwatch Labels affixed to the end of the freezer packaging. The center of these labels has a small round window which turns bright red to signal mishandling of the product.

1. When shipment is received note the color of the indicators.
2. If either label has been activated, note on the delivery receipt which packages show a red label and request the carrier's driver to sign the receipt acknowledging that the label was activated.
3. Before turning over the receipt to the driver, uncrate the unit and, if there is internal damage, please note the fact on the delivery receipt. At this time you may refuse the shipment.
4. The shipment will be removed by the carrier and returned to the warehouse. It is recommended at this point that you call the manufacturer and advise of the condition of the shipment.
5. After the protective packaging has been removed from the freezer, it will be left standing on the shipping base with foam pads between the freezer and the shipping base.
6. To remove the freezer from the base, it is recommended hat a fork truck be used.
7. Slide the forks under the freezer from the front and at the center.
8. Raise it high enough to remove both foam pads and the shipping base.
9. Place blocks under one end of the freezer and lower the forks.

SECTION 3 -- INSTALLATION

Do not attempt to operate this freezer until the preceding Installation Check List steps have been completed.

INSTALLATION CHECK LIST

		Date	Initial
The freezer is in place.			
The freezer has been leveled.			
Check freezer data plate voltage.			
Check supply voltage is the same as data plate.			
Check that power panel circuit protection rating does not exceed that indicated on the data plate.			
LCO2 supply valve is Off			
Facility monitoring system connected to freezer's remote alarm contacts.			
Compressor shipping bolts have been loosened (*see* the following section8)			
If applicable, water supply and discharge are connected if unit uses a water-cooled condenser in accordance with WATER-COOLED CONDENSING UNIT CONNECTIONS, page 9.			
No product loaded in freezer.			
Main building power panel breakers are On.			
Using key provided, turn the compressor key switch to ON.			
Set primary control set points. (*see* Section 4 for information on the control panel)		—	—
a	Depress Scan button (key #7) until LED for temperature set point is lit (key #1a). Turn cabinet temperature setpoint adjusting screw (key #4) until the desired temperature is shown on the digital display (#12).		
b	Depress Scan button until LED for cold alarm set point (key #1b) is lit. Turn cold alarm setpoint adjusting screw (#5) until the desired temperature is shown on the digital display (key #12). It is recommended that this setting be 10 ˚C colder than the control setpoint.		
c	Depress Scan button until LED for warm alarm set point (#1c) is lit. Turn warm alarm setpoint adjusting screw (#6) until the desired temperature is shown on the digital display (#12). It is recommended that this setting be 10 °C warmer than the control setpoint.		
Turn LCO2 supply valve On after cabinet reaches operating temperature.			

LOOSENING COMPRESSOR MOUNTS

Compressors are mounted using the assembly illustrated at the right. When units are shipped from the factory, the motor compressors are rigidly secured to the base by the mounting components. Before these units are placed into operation, the Y2” top mounting nut must be loosened to allow the compressor to float on the springs. Using a Y2” combination box and open-end wrench, loosen the nut enough for 1/16 inch clearance between the nut and rubber spacer. If subsequent shipping is necessary, re-tighten the upper nut.

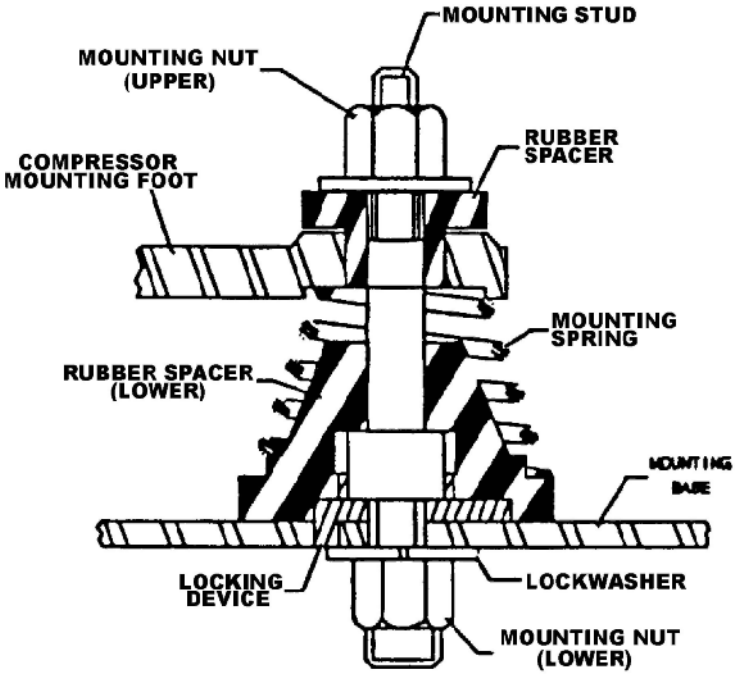

CHART RECORDER

Set Up and Operation

To prepare the recorder to function properly, complete the following steps:

1. Open the recorder door to access the recorder.
2. Connect the nine volt DC battery located at the recorder's upper right corner. This battery provides backup power.
3. Install clean chart paper.
4. Remove the plastic cap from the pen stylus and close the recorder door.

Recorder operation begins when the system is powered on.The recorder may not respond until the system reaches temperatures within the recorder's range.

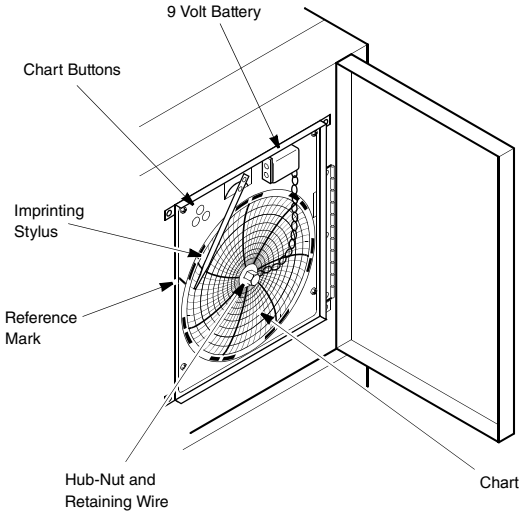

Figure 1. Chart Recorder

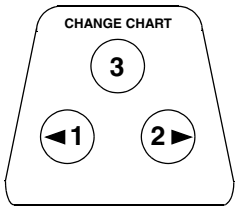

Figure 2. Chart Buttons

CAUTION! Do not use sharp or pointed objects to depress the chart buttons. This may cause permanent damage to the recorder.

Power Supply

The recorder normally uses AC power when the system is operating. If AC power fails, the LED indicator flashes to alert you to a power failure. The recorder continues sensing cabinet temperature and the chart continues turning for approximately 24 hours with back-up power provided by the nine-volt battery.

The LED indicator glows continuously when main power is functioning and the battery is charged.

When the battery is low, the LED flashes to indicate that the battery needs to be changed.

Changing Chart Paper

To change the chart paper, complete the following steps:

1. Locate the pressure sensitive buttons at the front, upper left of the recorder panel.
2. Press and hold the Change Chart button (#3) for one second. The pen will move off the scale.
3. Unscrew the center nut, remove the old chart paper, and install new chart paper. Carefully align the day and time with the reference mark (a small groove on the left side of the recorder panel).
4. Replace the center nut and hand tighten. Press the Change Chart button again to resume temperature recording.

Calibration Adjustment

This recorder has been accurately calibrated at the factory and retains calibration even during power interruptions. If required, however, adjustments can be made as follows:

1. Run the unit continuously at the control setpoint temperature. Continue steady operation for at least two hours to provide adequate time for recorder response.
2. Measure cabinet center temperature with a calibrated temperature monitor.
3. Compare the recorder temperature to the measured cabinet temperature. If necessary, adjust recorder by pressing the left (#1) and right (#2) chart buttons.

Note: *The stylus does not begin to move until the button is held for five seconds.*

LIQUID CO2 BACKUP SYSTEM

When connected to a user supplied siphon tank of liquid CO2, the backup system will provide a source of backup refrigeration in case of power failure to the mechanical refrigeration equipment. The control assembly operates on 120VAC, 1 , 60Hz. A backup battery supply is continuously charging for operation of the backup system during power failure.

Installation

1. Place the LCO2 control system on top of the System B mechanical section.
2. Connect the LCO2 supply to the back of the control system.
3. Connect theLCO2 distribution tube to the back of the unit.
4. Connect the LCO2 temperature sensor to the Mate-N-Loc connector that hangs from the rear of System B mechanical section.
5. Connect the LCO2 control system harness to the Mate-N-Loc connector that hangs from the rear of System B mechanical section.
6. The assembly of the LCO2 to the cabinet is now complete.

NOTE	An LCO2 supply must be provided by the customer. The supply pressure must be 900 – 1,000 PSIG.

7. Uncoil the tubing from the control unit and connect to the LCO2 tank or supply connection.
8. Turn on the LCO2 valve.
9. Refer to the Backup System Owners Manual for operation instructions.

NOTE	LCO2 backup systems built by Harris Manufacturing are typically built with a relief valve set for 1,300 PSIG.

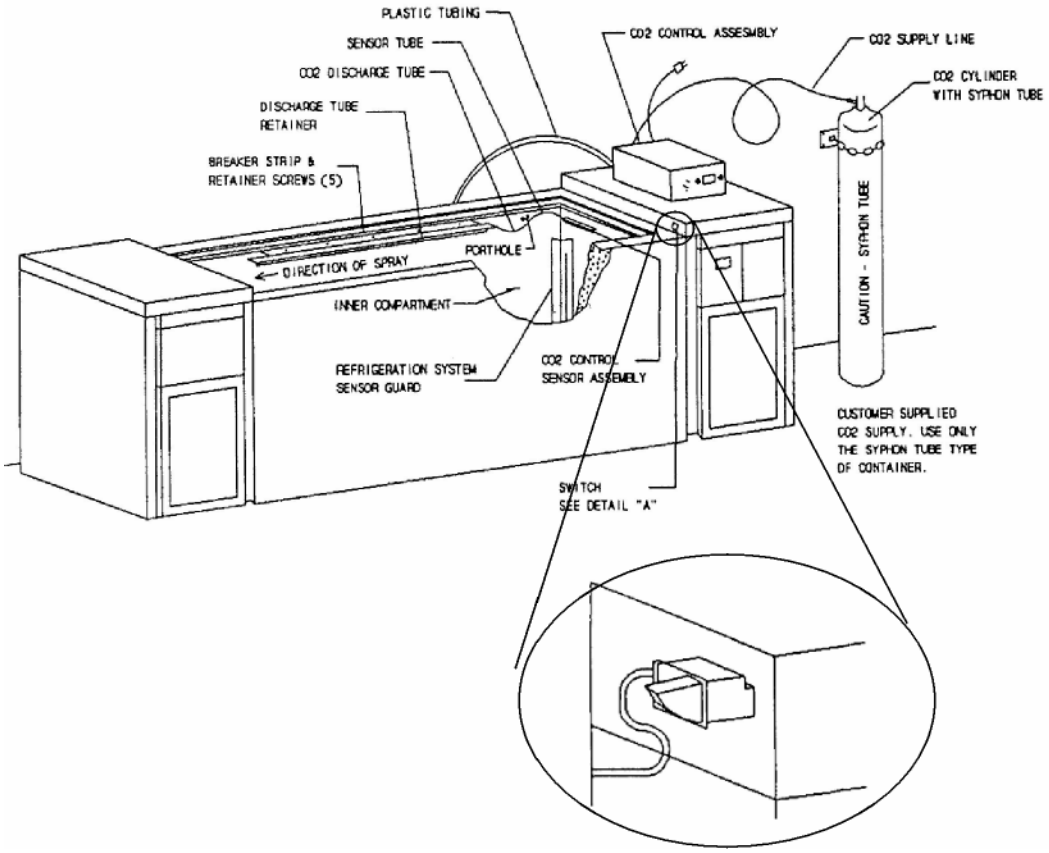

LCO2 Control System Battery Condition

The charge level light illuminates when the battery is below 80% of full charge. It is also possible that the charge level light will illuminate when the control system is dispensing LCO2.

Placing LCO2 control system in storage

CAUTION	Any rise in temperature will cause a rapid rise of pressure of liquid CO2 trapped in the supply line. After turning off the LCO2 supply, bleed the supply line by lowering the LCO2 setpoint sufficiently to cause the LCO2 solenoid to open. With the solenoid open, disconnect the supply line from the backup system control unit.

WATER-COOLED CONDENSING UNIT CONNECTIONS

CAUTION	ONLY QUALIFIED REFRIGERATION TECHNICIANS ARE TO MAKE CONNECTIONS OR ADJUSTMENTS.

The MBF700 can be purchased with air-cooled condenser, water-cooled condenser, or both. If purchased with water-cooled condensers, there are two water supply and two water discharge connections to be made at the rear of the cabinet (see Figure 12) if you wish to use the water cooling feature:

1. Locate the machine sections at each end of the freezer as you face the rear of the cabinet.
2. At the bottom of each machine section are two 3/8" O.D. copper tubes stubbed out through the cabinet grille (see diagram, next page). The outermost tubes are the COLD WATER INLET and the inner-most tube is the WATER OUTLET.

- The four tubes terminate with 3/8" 45° SAE flare nuts.

NOTE	If it is necessary to reship these units and water has been connected in the past, the lines must be blown clear with compressed air in order to preclude freezing and rupturing the water cooled condenser.

There are normally three possible sources of cooling water for these freezers, and any one may be satisfactory used. They are:

1. City water supply, discharge water wasted to drain.
2. Chilled water from a building air conditioning chiller. In this case, the discharge water goes back to the chilled water loop and is recirculated.
3. Cooling tower water supply, discharge water goes back to the tower water loop.

Factory specification for maximum water supply temperature is 85°F. The automatic water regulating valve allows use of any of these sources. Seasonal water temperature changes may require slight adjustment of the water regulating valve. The factory setting is 195 PSIG.

The Selector Ball Valve can be accessed by removing the end cover on each of the machine compartments. The valve may be identified by the square wrench flats on its top. The flow-indicating arrow will be perpendicular to the tubing when the valve is closed, and parallel to the tubing when the valve is open.

NOTE	Adjustment of the Selector Ball Valve is to be performed only by a qualified refrigeration technician.

- For air cooling only, do not connect water and leave valve closed.
- For use with water cooling, connect water and open the valve.

To adjust the automatic water regulating valve for best operating economy, install a head pressure gauge; with the compressor operating, turn the adjusting stem (located on top of the valve) until a head pressure of 195 PSIG is measured. Clockwise rotation of the adjusting stem lowers the head pressure; counterclockwise rotation raises the head pressure.

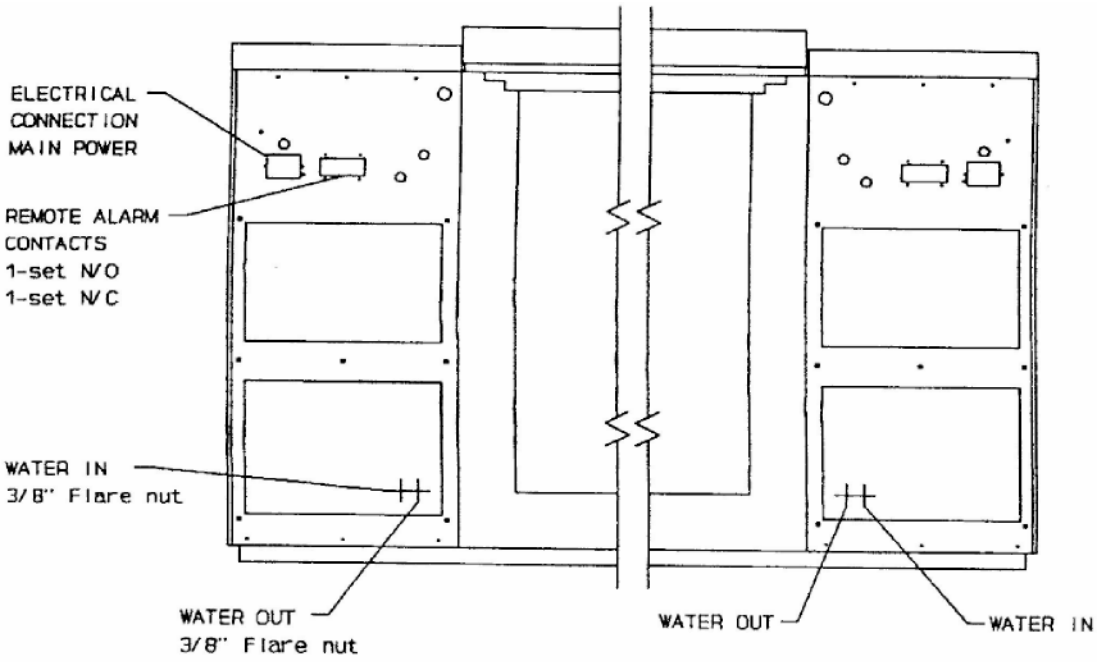

Rear view of cabinet showing connections

SECTION 3 – CONTROL OPERATION

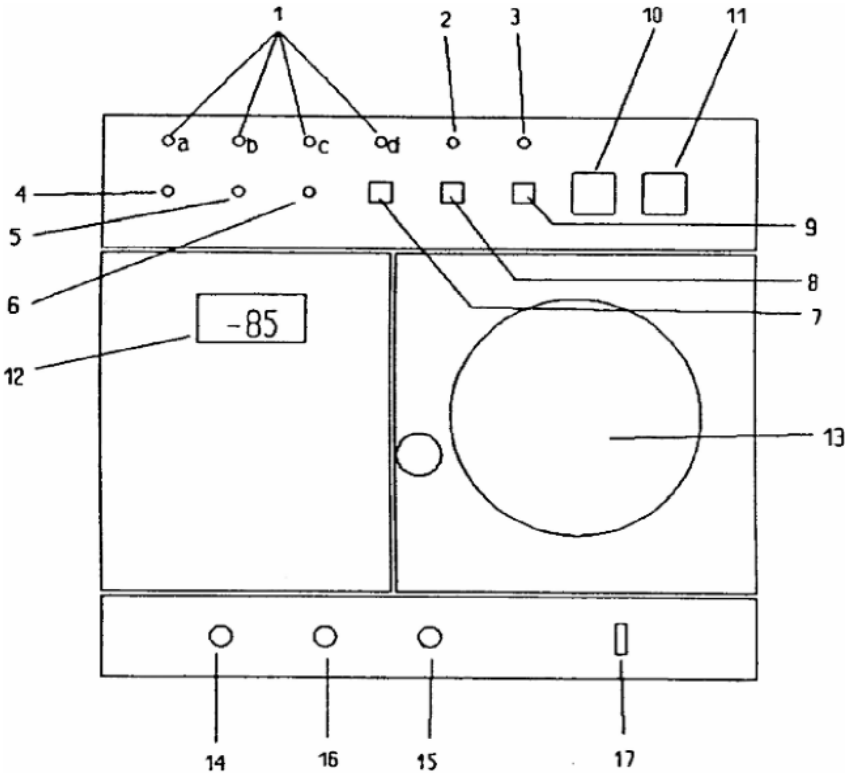

NOTE	A flat blade screwdriver (1/8" wide x 3 1/2" blade) will be required to adjust setpoints at items 4, 5, & 6.

1. Indicator LED's for display modes.
   a. Cabinet temperature setpoint (amber) b. Cold alarm setpoint (amber)
   c. Warm alarm setpoint (amber) d. Cabinet temperature (green)
2. Temperature failure LED (red) "ON" when cabinet temperature has exceeded set alarm points.
3. Power failure LED (red) "ON" when AC power is not available at the freezer.
4. Cabinet temperature setpoint adjusting screw. Sets control set point.
5. Cold alarm setpoint adjusting screw. Sets cold alarm point.
6. Warm alarm setpoint adjusting screw. Sets warm alarm set point.
7. Scan button. Sets parameter displayed in digital display.
8. Audio silence button. Temporarily silences local audio for 5-7 minutes.
9. Alarm test button. Provides test of warm alarm point.
10. Key-operated alarm ON/OFF switch. Turns on local audio alarm.
11. Key-operated compressor ON/OFF switch. Turns on power to compressors and control system.
12. Digital temperature indicator.
13. Temperature recorder, 7-day, 6" diameter.
14. System "B" indicator light. "ON" when system "B" 2nd stage running.
15. System "A" indicator light. "ON" when system "A" 2nd stage running.
16. Alternate system alarm indicator light. "ON" when auxiliary control causing both systems to operate.
17. Heater switch. Operates breaker strip condensate heater.

All controls are located at the right end of the cabinet. The labeled illustration on the next page shows the panel top section with status indicator lights, control adjusting screws and system push buttons. Directly below the control panel at the left is the Digital Display window. The Emergency Stop button is on the right.

NOTE	To set the adjusting screws, use a flat blade screwdriver with a 1/8" wide by approximately 3 1/2" long blade

Pressing the Scan button (item #7) repeatedly will sequentially light the red, green and amber status LED's. When the LED above the desired function is illuminated, turning the adjusting screw will change the digital display indicating a change in the setting being made. When the green cabinet temperature LED is on, the display will be indicating actual cabinet temperature.

SECTION 4 – OPERATION AND MAINTENANCE

OPERATOR'S RESPONSIBILITIES

NOTE	These paragraphs define the Operator's responsibilities for reporting trouble symptoms on startup of the freezer and also observing its operation on an ongoing basis in order to prevent any mechanical or electrical failures that could result in loss of blood products.

Frequency Of Task		**Description Of Tasks, Observations & Record Keeping Requirements**
Once on first start	a.	Time required for initial pulldown. If a freezer has been in warehouse storage for any length of time, the joints between compressor gaskets for metallic mating parts may leak refrigerant due to the gaskets drying out. If only partial loss of the refrigerant has occurred, the sign will be slow pulldown time required reaching -80 °C. Pulldown time should be 2.5 hours or less. If it is more than 2.5 hours, the technician must either determine the cause and the remedy therefore or IMMEDIATELY SHUT DOWN THE FREEZER until the problem can be diagnosed and remedied.
	b.	Carefully record the first few on-off periods with freezer empty, and then again loaded with product. Keep this record with the freezer at all times for future reference in troubleshooting.
	c.	If the installation is made in an air-conditioned area, there will not be much, if any, change in cycle. However, if the ambient temperature is subject to changes, make a record of cycle times at these various ambient temperatures.
Daily	a.	Listen for rattles. If refrigerant-carrying copper tubing is allowed to rub against other tubes or any object, a leak will very quickly occur resulting in loss of the refrigerant charge and cabinet temperature.
	b.	Watch the system operation indicator light. It should not be showing the same system always operating. For instance, when system A has been operating and shuts off, system B should start on the next control call for cooling.
Weekly	a.	Air-Cooled units only: clean the condenser air filter when its original jet-black color has changed. Attention to this detail will assure shortest running times and prolong the life of the freezer.
	b.	Make sure the lid closes without interference and that sub lids are always in place.
	c.	Ensure that the sub lids are in place.
	d.	Verify that the LCO2 vent is free of frost accumulation.
On Using	a.	Watch for lid gasket tears. Streaks of frost will collect inside the freezer at the precise location of the torn or cut gaskets.
	b.	Defrost the cabinet if frost or ice build-up exceeds 1/4” thickness: remove product, turn power key switch Off, leave unit open 48 hours, remove moisture, restart unit.

Call the Maintenance Department or the manufacturer’s Technical Service group (1-800-438-4851) for assistance.

MAINTENANCE PROCEDURES

CLEANING THE FREEZER SURFACES

The inside and outside of the freezer are coated with a heat fused epoxy powder finish. It may be cleaned with any non-abrasive cleaner such as hand dish washing detergent. To prevent odors on the inside of the freezer after cleaning, it is recommended that, after cleaning with detergent, the entire surface be wiped with a clean cloth soaked with a solution of one-half(1/2) gallon of water and one-quarter (1/4) cup of baking soda.

STORAGE

Before placing the freezer in storage, turn the key switch to Off, unplug the power cord, open the lid and allow the interior to warm up to ambient temperature. Dry out the interior. Prop the lid open at least 6" and secure in this position. If water cooling has been used, the water lines of BOTH water cooled condensers must be blown out to prevent freezing.

AIR COOLED CONDENSERS

Because heavy traffic areas are dustier than others, a cleaning schedule for air-cooled condensers and filters is difficult to predict. A suggested schedule, however, is 6 months, which can be adjusted as needed. Access to the filters is gained by removing the three screws at the outboard edge of both front hinged panels and swinging them open. The filter will come out and can be washed with a mild detergent, rinsed and replaced. It is not necessary to dry the filter. The condenser coil itself may be vacuumed clean at the same time.

COMPRESSOR OIL LEVEL

Lubricating oil is retained in both the compressor crankcase and in passages below the motor rotor. It will not leave the compressor unless a serious refrigerant leak has occurred. Oil slingers at the motor end of the crankshaft pick up the oil and feed it to the crankshaft. Centrifugal force then delivers oil under pressure to the bearings, crank pins, etc. THE UNIT MUST BE LEVEL. If the compressor end is too low, oil cannot reach the slingers. These compressors have a sight glass and the oil level should be visible in the upper half of the glass. Too much oil encroaches on the clearance space between the rotor and stator of the motor and should be avoided.

FAN MOTORS

One or more cooling fans are provided in the machine compartment of Harris freezers, whether water-cooled or air-cooled. No oiling is necessary. During periodic maintenance, these fans should be checked for operation. If the compressors are running but any one of the fan motors is not, the inoperative one must be replaced.

DEFROSTING

Chest type freezers do not require defrosting more often than once every six months to a year unless they are subject to heavy usage. Frost will begin to build at first around the top of the inner liner and will decrease in proportion to the distance from the top. Frost or “snow” will be the most apparent accumulation and it may be removed with a plastic scraper. If any hard ice has developed, do not chip it using metallic objects. Instead, remove all products stored in the freezer, turn the key “off”, unplug the unit, and allow it to warm up. When temperature has risen far enough, the ice can be readily dislodged.

To check gaskets for proper sealing, use a 2” x 6” piece of paper (a dollar bill is handy) closed between the gasket and the lid at 12” intervals around the perimeter of the lid. At each position, pull on the free end of the paper. A slight resistance should be felt. While performing this test, inspect the gasket for cuts or tears. An improperly sealing gasket must be replaced.

LCO2 VENT

On a semi-annual or monthly basis (depending on frequency of lid opening), verify that the LCO2 vent is free of dirt and frost/ice accumulation that might interfere with the venting function.

WEEE Compliance

WEEE Compliance. This product is required to comply with the European Union's Waste Electrical & Electronic Equipment (WEEE) Directive 2002/96EC. It is marked with the following symbol. Thermo Fisher Scientific has contracted with one or more recycling/disposal companies in each EU Member State, and this product should be disposed of or recycled through them. Further information on our compliance with these Directives, the recyclers in your country, and information on Thermo Scientific products which may assist the detection of substances subject to the RoHS Directive are available at **www.thermo.com/**

Great Britain

WEEE Konformittät. Dieses Produkt muss die EU Waste Electrical & Electronic Equipment (WEEE) Richtlinie 2002/96EC erfüllen. Das Produkt ist durch folgendes Symbol gekennzeichnet. Thermo Fisher Scientific hat Vereinbarungen getroffen mit Verwertungs-/Entsorgungsanlagen in allen EU-Mitgliederstaaten und dieses Produkt muss durch diese Firmen widerverwetet oder entsorgt werden. Mehr Informationen über die Einhaltung dieser Anweisungen durch Thermo Scientific, dieVerwerter und Hinweise die Ihnen nützlich sein können, die Thermo Fisher Scientific Produkte zu identizfizieren, die unter diese RoHS. Anweisungfallen, finden Sie unter **www.thermo.com/**

Deutschland

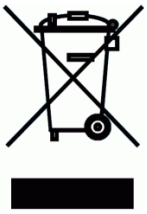

Conformità WEEE. Questo prodotto deve rispondere alla direttiva dell' Unione Europea 2002/96EC in merito ai Rifiuti degli Apparecchi Elettrici ed Elettronici (WEEE). È marcato col seguente simbolo.Thermo Fischer Scientific ha stipulato contratti con una o diverse società di riciclaggio/smaltimento in ognuno degli Stati Membri Europei. Questo prodotto verrà smaltito o riciclato tramite queste medesime. Ulteriori informazioni sulla conformità di Thermo Fisher Scientific con queste Direttive, l'elenco delle ditte di riciclaggio nel Vostro paese e informazioni sui prodotti Thermo Scientific che possono essere utili alla rilevazione di sostanze soggette alla Direttiva RoHS sono disponibili sul sito **www.thermo.com**/

Italia

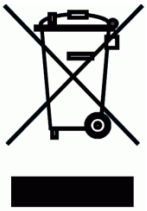

Conformité WEEE. Ce produit doit être conforme à la directive euro-péenne (2002/96EC) des Déchets d'Equipements Electriques et Electroniques (DEEE). Il est marqué par le symbole suivant. Thermo Fisher Scientific s'est associé avec une ou plusieurs compagnies de recyclage dans chaque état membre de l'union européenne et ce produit devraitêtre collecté ou recyclé par celles-ci. Davantage d'informations sur laconformité de Thermo Fisher Scientific à ces directives, les recycleurs dans votre pays et les informations sur les produits Thermo Fisher Scientific qui peuvent aider le détection des substances sujettes à la directive RoHS sont disponibles sur www.thermo.com/

France

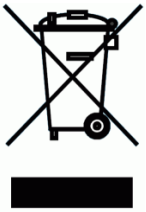

Important

For your future reference and when contacting the factory, please have the following information readily available:

Model Number: _____

Serial Number: _____

Date Purchased: _____

The above information can be found on the dataplate attached to the equipment. If available, please provide the date purchased, the source of purchase (manufacturer or specific agent/rep organization), and purchase order number.

IF YOU NEED ASSISTANCE:

SALES DIVISION

Phone: 1-866-984-3766 (866-9-THERMO)

LABORATORY PARTS and SERVICE

Phone: 1-800-438-4851

TECHNICAL SUPPORT

Phone: 1-800-438-4851

Thermo Fisher Scientific Inc.

275 Aiken Road
Asheville, NC 28804
United States

www.thermofisher.com

Thermo
SCIENTIFIC

316004H01