CO_2 backup cooling system for units

Operating Instructions

Valid: 05.2006 / 50 061 512 C

Thermo
ELECTRON CORPORATION

Thermo Electron LED GmbH
Robert-Bosch-Strasse 1
D - 63505 Langenselbold
Germany

The following are the addresses of the international Thermo Sales Organisations.

Postanschrift Deutschland
Thermo Electron LED GmbH
D – 63505 Langenselbold
Robert-Bosch-Straße 1

Anfragen aus Deutschland
Telefon
Vertrieb 0800 1 536376
Service 0800 1 112110
Fax
Vertrieb/Service 0800 1 112114
E-Mail
info.labequipment.de@thermo.com

Enquiries from Europe, Middle East and Africa
Tel. + 49(0) 6184 / 90-6940
Fax + 49(0) 6184 / 90-7474
E-Mail
info.labequipment.de@thermo.com

Postal address USA
Thermo Electron Corporation.
275 Aiken Road
Asheville, NC 28804
USA

Enquiries from North America
Phone + 1 800-879 7767
Fax + 1 828-658 0363
E-Mail
info.labequipment@thermo.com

Enquiries from Latin America
Phone + 1 828-658 2711
Fax + 1 828-645 9466
E-Mail
info.labequipment@thermo.com

Enquiries from Asia Pacific
Phone + 1 852-2711 3910
Fax + 1 852-2711 3858
E-Mail
info.labequipment@thermo.com

Internet: www.thermo.com

Contents

Figures

1. Safety instructions

1.1 Notes for the operator

Dear Operator,
the CO_2 backup cooling system has been manufactured in keeping with the latest technological developments and is operationally safe. However, the system may present potential hazards, particularly if it is operated by inadequately trained personnel or if it is not used to the intended purpose:

For any operation of this unit, the operator must prepare written instructions in a reasonable form and in the language of the operating and cleaning personnel based on these operating instructions, on the safety data sheets, and on the relevant Technical Guidelines (Germany: accident prevention regulations, UVV VBG 1 § 7, 2).

Use these operating instructions to familiarize the operating personnel with the functions, operation, and maintenance of the system.

The contents of the operating instructions are subject to change without further notice.

Concerning translations into foreign languages, the German version of these operating instructions is binding.

For safety reasons, unauthorized modifications or reconditioning of the system are prohibited and will make the warranty void.

Keep these operating instructions close to the system so that safety instructions and important information are always accessible.

1.2 Notes for the user

Dear User,
Prior to the initial operation of the system, please read these operating instructions carefully to make sure that you can fully exploit the advantages of a unit in combination with the system and to prevent possible damage:

These operating instructions describe the **CO_2 backup cooling system** for units.

Units in combination with the CO_2 backup cooling system must be operated only by authorized and adequately trained personnel.

The installation of the system must be carried out only by trained and authorized expert personnel.

Should you encounter problems that are not mentioned in these operating instructions, please contact your supplier immediately for your own safety.

1. Safety instructions

1.3 Explanation of symbols

Symbols used in the operating instructions:

WARNING!
is used if non-observance may cause serious or even lethal injuries.

CAUTION!
is used if non-observance may cause medium to minor injuries or damage.

NOTE!
is used for hints and useful information.

RECYCLING!
Valuable raw materials can be reused.

Wear safety gloves!

Wear safety goggles!

Corrosive substances!

Explosive!

Symbols on the unit:

CE symbol

Observe operating instructions!

1.4 General safety instructions

Correct usage:
The CO_2 backup cooling system is used for temporary cooling of the interior of freezers in case of refrigeration system or power supply failures.

If pressure cylinders are used for the CO_2 supply, use only cylinders with vertical piping and individual connection.

The CO_2 backup cooling system is generally suited for units used in the following areas:
- Laboratories for microbiological and biotechnical experiments;
- Medical-microbiological laboratories according to DIN 58 956;
- Laboratories in the central area of clinics and hospitals;
- Laboratories of safety levels L1, L2, and L3.

Limits of correct usage:
The function period of the CO_2 backup cooling system depends on:
- the number and volume of the connected CO_2 cylinders,
- the preselected setpoint temperature,
- the number of stored specimen,
- the ambient conditions.

Incorrect usage:
Units in combination with a CO_2 backup cooling system must not be operated in rooms that do not comply with the location requirements (refer to section on location requirements in the operating instructions of the units).
The CO_2 backup cooling system must not be operated if specimen that react with CO_2 are stored in the unit .

Safety requirements:
The CO_2 backup cooling system - consisting of unit-internal accessories and external installation - is in accordance with the safety requirements of the following standards and directives:

- DIN EN 61010,
- Low Voltage Directive 73/23 EWG,
- EMV Directive 89/336 EWG,
- UVV VBG 20.

1. Safety instructions

1.4 General safety instructions

Safety devices:
Units with CO_2 backup cooling system are equipped with the following additional safety devices:

Opening sensor
The opening sensor monitors the opening/closing state of the door or of the lid. If the door or the lid is opened, the electronic unit interrupts the CO_2 supply.

Pressure relief valve
A pressure relief valve compensates the pressures between the interior of the unit and the room where it is installed.
When CO_2 is injected, the valve compensates overpressure built in the interior of the unit.

NOTE – Function check

Check the pressure relief valve at regular intervals for correct operation.

Rupture disk (rupture joint)
A rupture disk installed in the connection component at the unit and the cooling system prevents an unacceptable pressure rise in the connection lines of the CO_2 cylinders.

NOTE – Rupture disk bursting

If the rupture disk bursts as a result of a pressure rise, the disk must be replaced by the Technical Service before the CO_2 backup cooling system is reoperated.

Installation of the system:
When installing the system, the Technical Directives for Pressure Gases, the General Requirements for Pressure Containers, the Instructions for Handling Pressure Containers (TRG 280) and the particular characteristics of CO_2 must be considered.
See Annex A, Safety data sheet for carbon dioxide (CO_2).

1.4 General safety instructions

Reusable materials

Disposal:
The units and the packaging contain materials that can be reused.
The external components of the CO_2 backup cooling system, lines, and connections must be disposed properly.

NOTE - Pressure cylinders!

Pressure cylinders must be returned to the supplier.

Materials used:
For a list of the materials used, please refer to section Materials used.

1. Safety instructions

1.4 General safety instructions

NOTE – Definition of terms!

Storage: Storage means keeping CO_2 cylinders available.
Provision: Provision exclusively means the connection to a terminal unit for emptying CO_2 cylinders.
The following notes on handling CO_2 apply only for the **provision of CO_2 cylinders.**

Handling pressure containers:
CO_2 for the backup cooling system is supplied in special pressure containers (CO_2 cylinders).
CO_2 cylinders must be operated in a way that ensures their operational safety:

- the climatic ambient conditions must not cause external corrosion,
- CO_2 cylinders must not be exposed to sources of heat,
- CO_2 cylinders must be protected from shocks and impacts,
- the CO_2 cylinders and all equipment components must be protected from grease and oil.

While CO_2 cylinders are pressurized, works to

- screws of pressurized components,
- screwed-in valves,
- connections

must only be performed by expert personnel using the appropriate tools.

NOTE – Briefing!

Personnel operating units with CO_2 backup cooling system must be briefed in the special handling of CO_2 cylinders:

- operation of the cylinders,
- special hazards resulting from the handling of CO_2 cylinders,
- compulsory reporting about damages or failures of CO_2 cylinders,
- measures to be taken in case of accident or failure.

The briefings must be repeated at appropriate intervals and include the particular operating instructions of the gas supplier.

1.4 General safety instructions

CAUTION - Danger of suffocation !

Large amounts of CO_2 released in the room atmosphere may cause suffocation. Leave the room immediately and stop others from entering it!
Inform safety service or fire department!
See Annex A, Safety data sheet for carbon dioxide (CO_2).

CAUTION - Danger of burns!

Contact with liquid CO_2 may cause cold burns or frost injuries.

For all works to the CO_2 system, wear protective clothing, safety gloves, and safety goggles!

Danger of fire:
Even though CO_2 is not flammable, pressurized CO_2 cylinders exposed to heat may present a hazard.

CAUTION - Pressure container!

CO_2 cylinders are sources of danger! The liquid CO_2 in the cylinders is highly pressurized. Overfilling of CO_2 cylinders, excessive ambient temperatures, and external heat sources may cause a pressure increase in the cylinders

1. Safety instructions

1.5 Safety data for CO_2

Rupture disk (rupture joint):
To protect the CO_2 backup cooling system and its installation components from damage due to overpressure, the system is equipped with a rupture disk that breaks at a predetermined pressure.
When the pressure increases to 90 bar (± 5 bar), the rupture disk breaks so that the overpressure is released and the CO_2 cylinder(s) is/are emptied completely.
CO_2 cylinders should generally be stored and used in ventilated rooms with ambient temperatures below 30° C. If it is not ensured that this ambient temperature can be permanently maintained, the use of an additional overflow valve is recommended. For more information, please contact the Service Department of Thermo Electron. As an alternative, underfilled cylinders can be used (see table below). For more information, please contact your gas supplier.

Cylinder filling:
The cylinder pressure depends on the ambient temperature and filling level.
The manufacturer fills CO_2 cylinders only up to 75 % of the actual cylinder volume. The remaining 25 % are required for compensating the liquid expansion at elevated ambient temperatures.
Cylinders with a test pressure of 250 bar are already completely (100 %) full at an ambient temperature of 22° C; when the ambient temperature increases by 5° C, the cylinder pressure increases to more than 80 bar (see table).

1.5 Safety data for CO_2

Cylinder pressure (depending on ambient temperature and filling volume):

Ambient temperature / °C	Filling volume CO_2 in %	Cylinder pressure / bar
+22	75	60
	68	60
	60	60
+25	75	70
	68	65
	60	65
+30	75	92
	68	80
	60	74
+32	75	105
	68	85
	60	80

☞ **HINWEIS - Cylinder pressure!**

As the cylinder pressure depends on the ambient temperature, an assessment of the filling level can only be made by weighing the CO_2 cylinder.

1. Safety instructions

1.5 Safety data for CO_2

Behaviour in the room atmosphere
Since CO_2 is heavier than air, it accumulates near the ground or in rooms below the ground. Immediate at the leaving point, escaping CO_2 may cool down to a temperature of –78 °C when it expands (i.e. when it mixes with the room air).

Properties of CO_2 :
- Molar mass: 44.01 g/mol

Gaseous state:
- Density, 0 °C, 1013 mbar: 1.9770 g/l
- Rel. gas density (air = 1): 1.53
- Ignition temperature, explosion limit: none

Critical point:
- Temperature: 31.04 °C
- Pressure: 73.83 bar
- Density: 468 kg/m³

Triple point:
- Temperature: -56.77 °C
- Pressure: 5.18 bar

1.5 Safety data for CO_2

Air limit value (TRGS 900): 9000 mg/m³, 5000ml/m³
- Peak limit.: 4

Liquid state:
- Melting point, 5.3 bar – -56.6 °C
- Boiling point: -79 °C
- Density at boiling point: 1.5289 g/cm³
- Vapour pressure, 20 °C – 57.3 bar

- Solubility in water, 20 °C – 1.5 g/l
- Water pollution class (WKG no. 256): 0
- Supplied state: Liquefied gas
- Cylinder fill pressure: 57 bar max. (at 20 °C)

1mg/m³ = 0.5467 ml/m³
1 ml/m³ = 1.829 mg/m³

For additional safety data, see Annex A.

2. Delivery

2.1 Scope of delivery

Standard version for three CO_2 cylinders:
The CO_2 backup cooling system comprises the following external components:

- 1 distributor [1] including pipe connectors for each connection
- 1 dummy plug [2]
- screws and dowels [6] for attaching the distributor to a wall
- 1 connection line [5] (approx. 2.5 m) for connecting the unit to the distributor
- 3 connection lines [3] (approx. 1.5 m each) for connecting the distributor to the CO_2 cylinders
- 3 cylinder connections [4] with union nut, gasket, including pipe connectors
- operating instructions

Extension set (optional)
The CO_2 backup cooling system can be extended. With each extension set, two additional CO_2 cylinders can be connected to the system.
The extension set comprises the following:

- 1 distributor [1] including pipe connectors for each connection
- 1 dummy plug [2]
- screws and dowels [5] for attaching the distributor to a wall
- 1 connecting pipe [6] for connecting the distributors
- 2 connection lines [3] (approx. 1.5 m each) for connecting the distributor to the CO_2 cylinders
- 2 cylinder connections [4] with union nut, gasket, including pipe connectors

2.2 Checking the delivery

After unpacking the external components of the CO_2 backup cooling system, check for completeness and possible transport damages.
If the delivery is incomplete or if damages are detected, please contact your dealer.

Figure 1 / 2

Fig. 1, Connection components for three cylinders

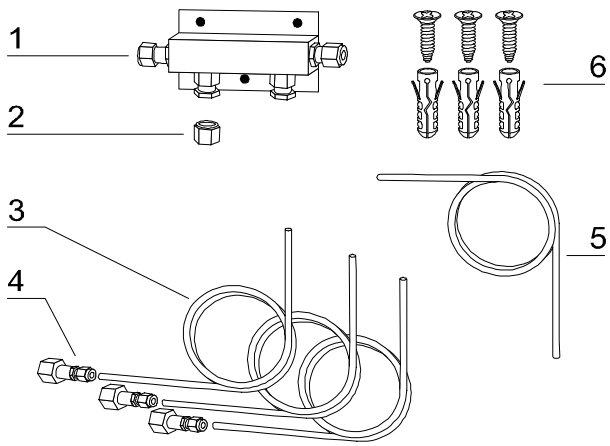

Fig. 2, Extension set

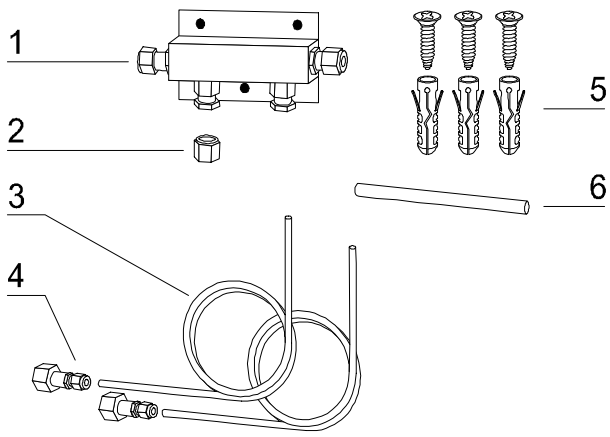

3. Location requirements

3.1 Prohibitions and restrictions

Units with CO_2 backup cooling system must only be installed at locations that:

- are in accordance with the particular ambient conditions for the installation of the units,
- are additionally in accordance with the restrictions that apply when pressure containers for CO_2 are provided to be emptied.
  For Germany, the following directives apply:
  ZH 1/119[1], ZH 1/392 ff., and TRG 280[2]. In other countries, the national regulations must be observed.

[1] ZH: Directives of the commercial trade associations,
[2] Technical Directives for Pressure Gases: Operating Pressure Containers,
Available from: Carl Heymanns Verlag KG, Köln

Inadmissible locations
The CO_2 cylinders must not be installed:

- at so marked emergency exits,
- in staircases, corridors, narrow yards as well as in passages or in their immediate vicinity,
- at outside stairs,
- in garages and rooms where motor vehicles are parked.

Admissible locations
In rooms below ground level (i.e. in rooms whose floor is 1.5 m below the area adjacent to the building), CO_2 cylinders must be installed only under the following conditions:

- A technical ventilation system is installed and operated continuously. The room must be equipped with a warning system that triggers an alert if the ventilation fails.
- The technical ventilation is operated at intervals but is equipped with a gas warning system that turns on the technical ventilation automatically if gas is detected.
- Some other room ventilation is installed that is in accordance with the operational conditions of the unit and the room is not more than 1.5 m below ground.

3.2 Ideal ambient conditions

Ideal locations
The following locations are ideal for the operation of a unit with CO_2 backup cooling system:

- They are equipped with a technical ventilation that exchanges the entire room air at least 12 times per hour.
- They are additionally equipped with a gas warning system.
- They are located above ground level.

4. Views of the system

4.1 System with three CO_2 cylinders

Figure 3

Front view, Fig. 3:

- Pressure relief valve for freezer cabinet [1]
- Pressure relief valve for freezer chest [3]
- Connection component with rupture disk at the rear of the unit [2]
- Connection line [4] for connecting the unit to the distributor
- Distributor [5]
- Connection line [6] with cylinder connector [7] for connecting the distributor to the CO_2 cylinder
- CO_2 cylinders [8]
- Support for CO_2 cylinders [8]

Fig. 3, System with three CO_2 cylinders

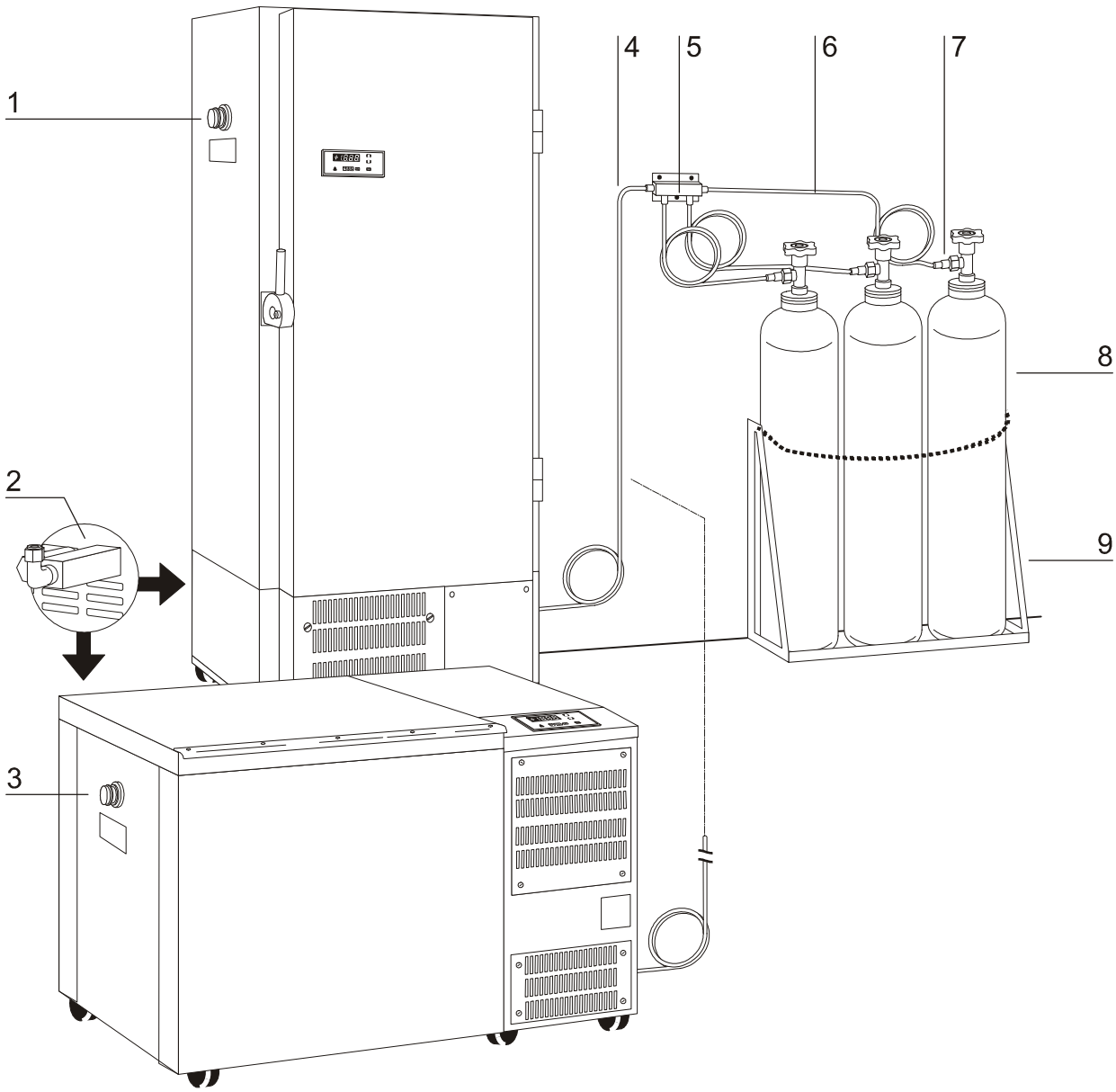

4. Views of the system

4.2 System with five CO_2 cylinders

Figure 4

Front view, Fig. 4:

- Pressure relief valve for freezer cabinet [1]
- Pressure relief valve for freezer chest [3]
- Connection component with rupture disk at the rear of the unit [2]
- Connection line [4] unit - distributor
- Primary distributor [5] with connections for two cylinders
- Adapter [6] to secondary distributor
- Secondary distributor [7] with connections for three cylinders
- Connection line [8] with cylinder connector [9] for connecting the distributor to the CO_2 cylinder
- Support [10] for CO_2 cylinders
- CO_2 cylinders [11]

Fig. 4, System with five CO_2 cylinders

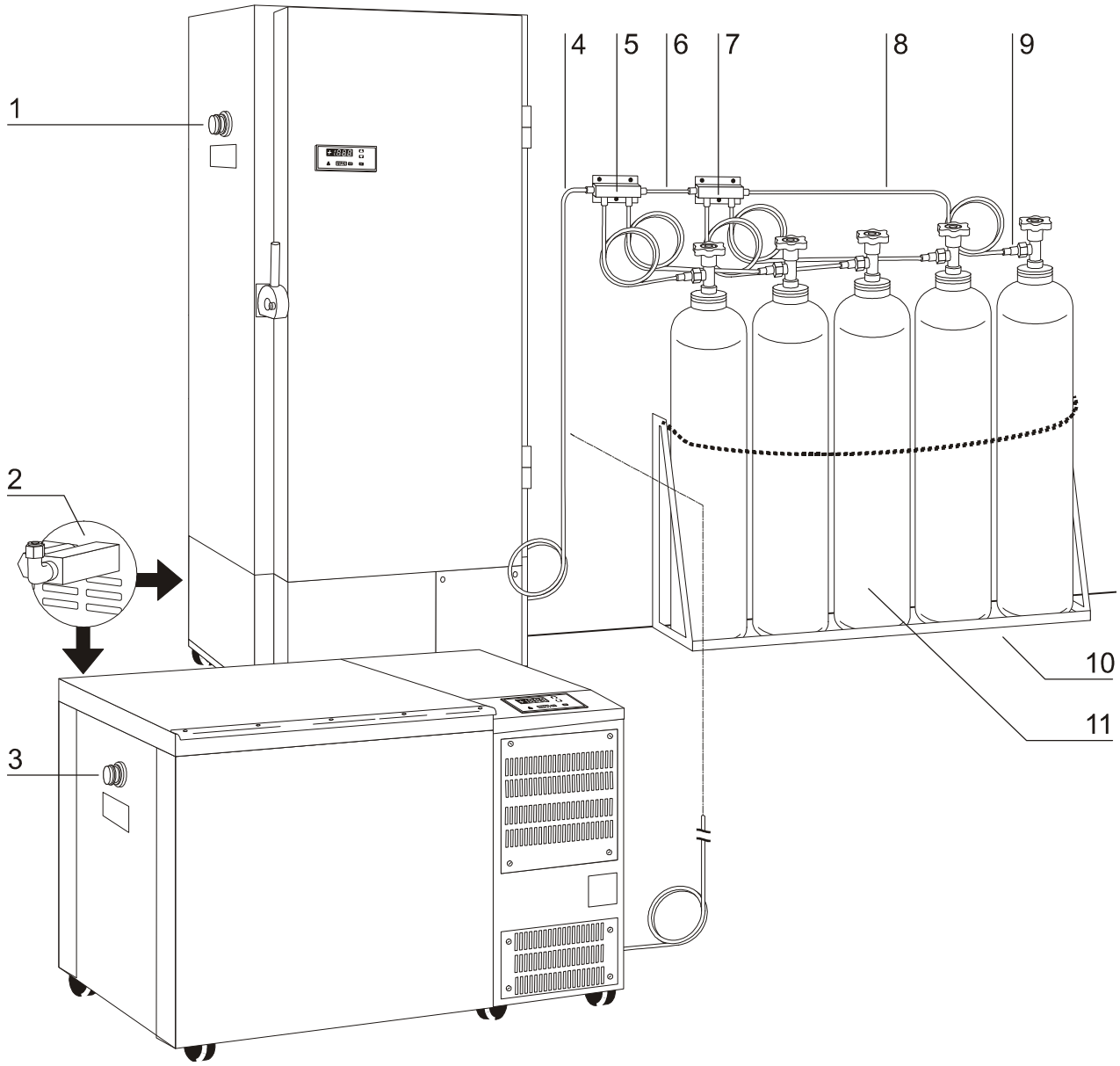

5. Unit functions

5.1 System control

The backup cooling system is an integral part of the unit's safety system.
In case of power failure, the CO_2 backup cooling system is supplied with voltage from a battery. As soon as the preset backup cooling temperature ( ) in the interior of the unit is reached, the CO_2 backup cooling system solenoid opens, and liquefied CO_2 is injected into the interior.
The control system of the unit measures and controls the interior temperature.
Depending on the change of the temperature, the control system controls the supply of liquefied CO_2 with the solenoid of the CO_2 backup cooling system.

NOTE – Battery capacity!

The battery is designed for an operational interruption of up to 72 hours so that the correct operation of the CO_2 backup cooling system throughout a weekend is ensured provided that a sufficient number of CO_2 cylinders is connected. For the consumption of CO_2, please refer to section specifications.

5.2 Mode of action

The liquefied CO_2 from the CO_2 cylinders is injected into the interior of the unit.
The liquefied CO_2 then expands to ambient pressure and evaporates in the interior.
Due to the expansion of the CO_2, the interior air is cooled down to the preset backup cooling temperature ( ).

5.3 Maximum operating time

The operating time of the CO_2 backup cooling system depends on the interaction of several components:

- the effective volume of the unit,
- the number of connected CO_2 cylinders,
- the filling level of the CO_2 cylinders,
- the ambient temperature,
- the loading level of the unit.

For detailed information about the maximum operating time, please refer to section specifications.

6. Start-up

6.1 Preparations

NOTE – Installation!

The CO_2 backup cooling system must be installed only by authorized expert personnel.

Checking the location
Prior to the installation, check to see if the chosen location is in accordance with the particular requirements or which additional installations are required for the operation.

Installation equipment
The following components are required for installing the backup cooling system but not included in the scope of delivery:

- Support for positioning and securing the CO_2 cylinders.

CO_2 cylinder layout
The components for installing the CO_2 backup cooling system are laid out for the operation of CO_2 cylinders with vertical piping for the extraction of liquid CO_2 and individual connections.

6.1 Preparations

CAUTION – Check cylinders!

Before connecting the cylinder to the line system, check the manufacturer's instructions on the cylinder!

- **Do not use substances other than liquefied CO_2 for the backup cooling system.**
- **Make sure that the CO_2 cylinder is equipped with vertical piping and individual connection.**
- **Do not connect CO_2 cylinders without vertical piping. Do not turn CO_2 cylinders upside down and do not operate them in that position.**
- **Do not use a pressure reducer for connecting the CO_2 cylinders.**

CAUTION - Electric shock:

Contact with current-carrying components may cause a lethal electric shock.
Prior to the installations, remove the power supply plug from the socket and protect it from accidental reconnection!

6. Start-up

6.2 Installation of the distributor

NOTE – Place of installation:

The dimensions of the CO_2 cylinders depend on the filling level. When choosing the place of installation for the distributor and routing the pipes, make sure that a connection of cylinders of different sizes (filling levels) remains possible.

NOTE – Cylinder size:

Thermo Electron recommend to connect a minimum of three CO_2 cylinders with a volume of 50 l each so that a failed unit can be overridden throughout a weekend.

Installation of the distributor
The distributor must be attached to a wall or to a mounting hanging from a wall.

1. **Fig. 5:** Mark the dowel holes through the holes on the distributor [1].
2. Drill the dowel holes and insert the plastic dowels into the holes.
3. Secure the distributor using the three retaining screws.

6.3 Connection of the lines

Line cleaning
Prior to the connection, carefully clean the interior and the exterior of the connection lines. Blow the pipes clean using compressed air and make sure that there is no foreign material in the lines.

Safety stretch
The connection line between the individual components must not be taut as otherwise the connections may leak if the cylinders or the lines are subjected to mechanical stress.

- **Fig. 6:** The safety stretch consists of a flexible spiral bend [1] with a radius (r) of at least 60 mm or a subsequent U-shaped bend [2] with a radius (r) of 60 mm.

Figure 5 / 6

Fig. 5, Installation of the distributor

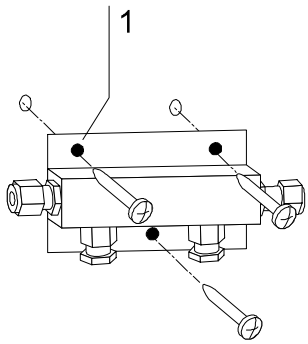

Fig. 6, Safety strech for connection lines

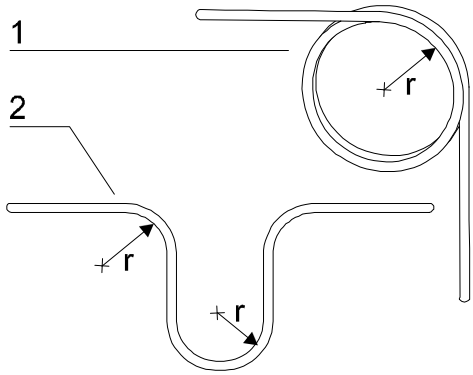

6. Start-up

6.3 Connection of the lines

CAUTION – Bite-type connections!

The liquid CO_2 is highly compressed. The pipe connections of the backup cooling system must be capable of enduring these pressures.
Do not use bite-type connectors for connecting the pipes. Use clamping ring connectors!

NOTE – Pipe connections:

Thermo Electron guarantees the proper function of the system only if the supplied Swagelok® clamping ring pipe connectors are used.
Characteristics of this pipe connector:

- The connection components are preassembled and ready to use.
- The pipe connections can be opened and closed repeatedly.

Installation of the pipe connections
The pipe connection is preassembled at the static end: Unit connection, distributor connection, and cylinder connection.
Prior to the initial operation, leave the pipe connections in the preassembled state and do not disassemble them as otherwise foreign material may enter the connection which may result in a leaking connection.

Fig. 7: The pipe connection consists of a hex-head fitting [2] and a union nut [1] with clamping ring.
The two ends of the connection line that is to connect the two pipes must not be deformed or damaged. The ends must be cut off flatly.

1. Carefully insert the end of the connection line [3] all the way into the union nut [1] and tighten the union nut using your fingers.
2. Tighten the union nut 1¼ turns while holding the pipe connection at the hex-head socket [2].

Figure 7

Fig. 7, Installation of the pipe connections

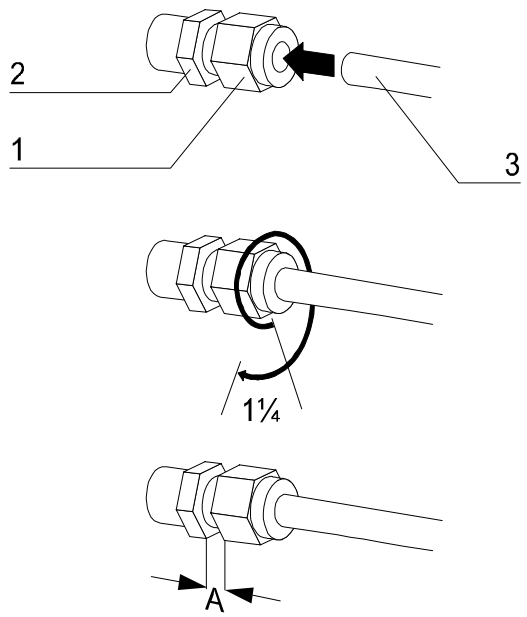

3. Using a feeler gauge or equivalent, measure the gap [A = 3.5 mm] between the union nut and the heax-head socket. If the gauge **can not** be inserted or if the gap A is below 3.5 mm, the torque is correct; otherwise slightly retighten the union nut and recheck the gap.

Connection sequence
Install the connection lines in the following sequence:

1. Connection line between unit and distributor.
2. Connection lines between distributor and cylinders.

6. Start-up

6.4 Connection of the CO_2 cylinders

CAUTION – Danger of injuries!

When liquefied CO_2 expands it produces extremely low temperatures.
Contact with CO_2 may cause cold burns and eye injuries.
For all works to CO_2 cylinders, wear protective equipment!

- **Wear safety gloves.**
- **Wear safety goggles.**
- **Wear protective clothing on arms and legs.**

Positioning CO_2 cylinders
The CO_2 cylinders must be installed in a cylinder support [5]; they must also be protected from falling and against the effects of shocks and impacts.

Connection of CO_2 cylinders
1. **Fig. 10:** Unscrew the protective cap [1] of the CO_2 cylinder.
2. Position the cylinder connector [4] to the connection valve [3] of the CO_2 cylinder and secure it using the union nut (30 mm wrench).
3. Carefully open the cylinder valve [2] by rotating the handwheel counterclockwise.

NOTE – Leak tightness of the connection:

Check all pipe connections and connectors to see if they are leak tight. Liquefied CO_2 forms ice residues around a leak when it escapes.
If leaks are detected, the system must not be started up.

NOTE – Filling state:

To ensure the safe operation of the backup cooling system, connect only full CO_2 cylinders to the system.

Checking the filling state
During operation, the filling state of the CO_2 cylinders should be checked in in short temporal separations.

Figure 8

Fig. 8, Connection of the cylinders

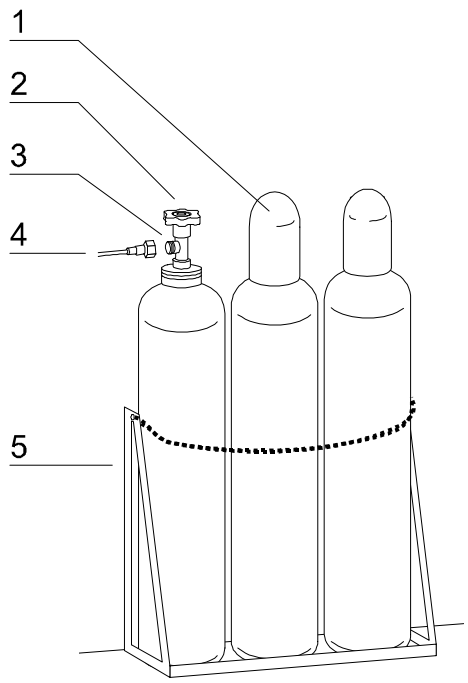

Always check the filling state after the backup cooling system was activated as the result of an increase of temperature (failure code F48).
The filling state can only be determined by comparing the cylinder full weight (as supplied) and the actual weight. This is done by weighing the cylinder on a scale.
At delivery the bottles are filled with 75% of the bottles space volume.
It is sufficient to weigh only one cylinder of a cylinder set as the liquefied CO_2 is withdrawn evenly from all connected and opened cylinders.

NOTE – Extraction quantity:

As liquid CO_2 for cooling it only ca can be taken about 70% of the CO_2-filling quantity.

7. Operation

7.1 Activating the system

The backup cooling system is activated in the following sequence:

1. Open the CO_2 cylinder valves.
2. Set the backup cooling temperature.
3. Turn the backup cooling system on.
4. Start test operation (see operating instructions of the unit). At this CO_2 is injected two times into the interior. Thereby it is ensured, that the cooling system is filled with liquid CO_2. If no liquid CO_2 is injected, repeat procedure.

NOTE – Leak tightness of connections:

To ensure the safe operation of the backup cooling system, always perform a leak test when opening the CO_2 cylinder valves. Therefore start the test operation (see point 4. above).

NOTE – Starting cycle:

During the starting cycle of the unit (alarm code flashes), the CO_2 backup cooling system is deactivated by the unit control.
The turned on CO_2 backup cooling system is activated only after the end of the starting cycle (alarm code off).

NOTE – Test of solenoid valve:

To test the function of the solenoid valve, a test run should be carried out in temporal separations of approx. 3 months (see operating instructions of the unit).

7.2 Deactivating the system

To deactivate the backup cooling system, proceed as follows:

1. Turn off the backup cooling system.
2. Close the CO_2 cylinder valves.

7. Operation

7.3 Setting the backup cooling temperature

Setting the backup cooling temperature[1] – mode

Setting the backup cooling temperature determines the reference temperature that the backup cooling system uses.

NOTE – Opening sensor:

When the door of the unit is opened, the CO_2 injection is interrupted!

No	Instruction	Operating steps	Typical display	Description
1.	Activate mode	Press **Mode** key	-86	The first mode ( ) is displayed. If no input occurs within 10 s, the actual temperature is displayed.
2.	Select mode	Press △ key or Press ▽ key	-65	The originally set value is displayed on the value display (upper). The selected mode is displayed on the mode display (lower).
3.	Enable mode change	Press **Set** key	-65	The value display flashes.
4.	Increase value	Press △ key	-60	The value display stops flashing. The value is changed by one counter. Depressing the key for approx. 3 s will trigger a continuous, ascending counter sequence.
5.	Decrease value	Press ▽ key	-70	The value display stops flashing. The value is changed by one counter. Depressing the key for approx. 3 s will trigger a continuous, descending counter sequence.
6.	Store mode change	Press **Set** key	-70	The new value is displayed and stored. If the SET key is not pressed within 10 s, the original value is maintained, and the actual temperature is displayed.
7.	Exit menu	Press **Mode** key	+25	The actual temperature is displayed.

[1] Factory settings:
HFU/HFC series freezers: -60 °C

7. Operation

7.4 Enabling the backup cooling system

Enabling the backup cooling system – mode

When this function is enabled, the backup cooling system will be activated as soon as the temperature within the interior chamber reaches the preset backup cooling temperature value.

No	Instruction	Operating steps	Typical display	Description
1.	Activate mode	Press **Mode** key	-86	The first mode ( ) is displayed. If no input occurs within 10 s, the actual temperature is displayed.
2.	Select mode	Press △ key or Press ▽ key	off	The set switching state is displayed on the value display (upper). The selected mode is displayed on the mode display (lower).
3.	Enable mode change	Press **Set** key	off	The value display flashes.
4.	Enable backup cooling	Press △ key	on	The value display stops flashing as long as the key is depressed.
5.	Disable backup cooling	Press ▽ key	oFF	The value display stops flashing as long as the key is depressed.
6.	Store mode change	Press **Set** key	oFF	The new setting is displayed and stored. If the SET key is not pressed within 10 s, the original value is maintained, and the actual temperature is displayed.
7.	Exit menu	Press **Mode** key	-86	The actual temperature is displayed.
Display while backup cooling is activated and during CO_2 injection				
			-65	The injection solenoid is activated, the triggered mode is displayed in the mode display (lower).

7. Operation

7.5 Alarm codes for operation with CO_2 backup cooling system

NOTE – Repairing faults!

If a fault can not be repaired using the measures described below, record the alarm code and contact Technical Service.

Alarm codes			
Display	**Description**	**Possible cause**	**Possible repairs / Notes**
	Battery supply activated	• Power supply interrupted	• Reestablish power supply
	Actual temperature not within alarm limits	• Alarm oppression at restart of the unit	• Display goes off automatically after start-up max. 480 minutes
	Battery monitoring	• Battery voltage below lower limit, accumlator is defect	• Check power supply • Battery will be recharged after power supply has been reestablished

7. Operation

7.6 Failure codes for operation with CO_2 backup cooling system

NOTE – Repairing faults!

If a fault can not be repaired using the measures described below, record the alarm code and contact Technical Service.

Failure codes			
Display	**Description**	**Possible cause**	**Possible repairs/Notes**
	Backup cooling system supply	• Cylinder is empty • Valve closed • Faulty pressure switch	• Connect full cylinder • Open valve • Contact Technical Service
	Backup cooling system activated CO_2 is injected	• Interior chamber temperature reached backup cooling temperature value • Newly stored specimen cause temperature rise (e.g too many specimen or specimen too warm) • Door/lid open too long • Power supply interrupted • Faulty refrigeration system	• Check backup cooling temperature setting and set point of the units temperature • Check load, allow unit to cool down, switch off CO_2 • Close door/lid and allow unit to cool down • Check power supply • Contact Technical Service

8. Shut-down

8.1 Shutting down CO_2 backup cooling system

The backup cooling system must be shut down if the CO_2 cylinders are separated from the line system to be replaced or checked.

CAUTION – Pressure load!

The connection lines of the backup cooling system are pressurized!
When disconnecting the cylinder connections, release pressure by slowly opening the union nut.

Separating CO_2 cylinders from the line system

1. Close the CO_2 cylinder valve [2].
2. Disable the backup cooling system.
3. Activate test run ( ) repeatedly to release line pressure in CO_2 connection lines.
4. Slowly open the union nut (30 mm wrench) [3] and carefully remove the connector from the line system.
5. Screw protective cap [1] onto CO_2 cylinder.

NOTE – Storage of CO_2 cylinders:

CO_2 cylinders must only be stored temporarily in the operating room for the duration of repair or service works.
If the CO_2 backup cooling system is to be shut down for an extended period, the cylinders must be stored in a room that is in accordance with the local regulations.

8.2 Emptying CO_2 cylinders

NOTE – Emptying:

Rests in CO_2 cylinders must be removed only in the open by authorized expert personnel using the appropriate equipment.
If the CO_2 backup cooling system was not activated during operation, the full cylinders must be collected by the gas supplier.

Figure 9

Fig. 9, Separating cylinders from the line system

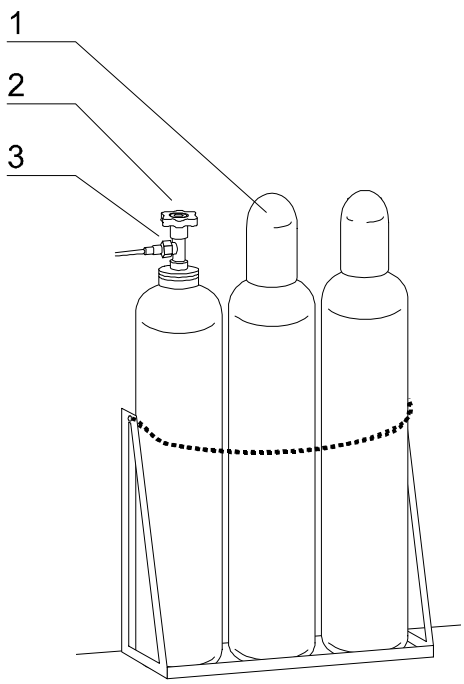

9. Maintenance

9.1 Warranty

NOTE - Warranty:

The manufacturer warrants the operational safety and the proper functions of the CO_2 backup cooling system only under the conditions that:

- the system has been installed in accordance with these operating instructions,
- the system has not been modified,
- only original spare parts are used,
- all repairs are carried out by adequately trained and qualified personnel,
- inspections are performed at the specified intervals.

NOTE – Service contract:

Thermo Electron offer a service contract for the CO_2 backup cooling system that comprises all the required inspections and maintenance works.

9.2 Annual inspection

To ensure the functionality and the operational safety of the CO_2 installations, an annual inspection must be performed by Thermo Electron or by authorized service personnel.

The annual inspection comprises the following test areas:

- Leak tightness of connections and connection lines.
- Checking the components for damage and corrosion.
- Function test for the pressure relief valve at the unit.
- Function test for the solenoid (test mode).
- Checking the charging state of the backup cooling system storage battery.
- Test of the failure codes.

NOTE – Function test:

If safety devices were removed or deactivated during service or repair works, the CO_2 backup cooling system must not be started up before the safety devices have been reinstalled and checked for proper operation.

9. Maintenance

9.3 Service and inspection

During normal operation, service to the system is not required.
The pressure relief valve at the unit must be checked at weekly intervals for its correct function and for possible ice formation:

Layout of the pressure relief valve

- **Fig. 10:** The pressure relief valve [1] is located at the exterior [A] of the pipe [2]. It is merely inserted in the pipe and retained by a clamping connection. The interior [B] of the pipe is fitted with a plug [3].

Checking the pressure relief valve

- **Fig. 11:** Pry off the pressure relief valve [1] from the pipe by inserting a screwdriver at the outer ring [2] of the pipe.
- Check the correct operation of the pressure relief valve by gently rocking it in the valve seat. If the valve shows signs of icing, allow ice to melt and check again. If excessive force is required to move the valve in its seat, the valve must be replaced.
- Check the plug [3] at the interior of the pipe for signs of icing by removing the plug from the exterior of the pipe [2] using a blunt instrument. Remove ice as required.
- Check pipe [2] for signs of icing. Remove ice as required.
- Insert the plug into the pipe.
- Insert the pressure relief valve into the pipe.

Figure 10

Fig. 10, Layout of the pressure relief valve

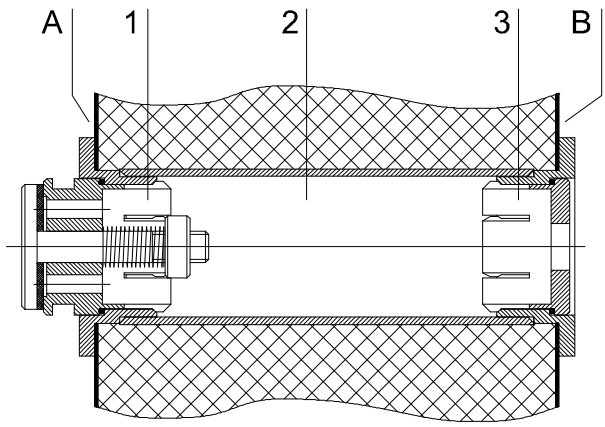

Fig. 11, Removal of the pressure relief valve

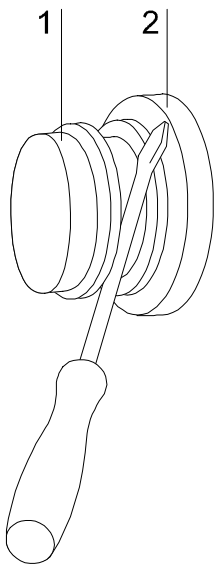

10. Spare parts and accessories

10.1 List of spare parts and accessories

NOTE – Repairs:

Use only original spare parts tested and approved by Thermo Electron. The use of other spare parts presents potential hazards and will make the warranty void.
When ordering spare parts and accessories, please hold the unit specifications of the nameplate ready.

Spare part	Order no.
Connector, distributor/distributor	50060173
Distributor	50060158
Cylinder connection assy.	50060172
Operating instructions	50059660

Accessories	Order no.
Cylinder connection extension	50060156
CO_2 pressure hose (flexible metal hose), 1 m	50060771
CO_2 pressure hose (flexible metal hose), 2 m	50060944

11. Specifications

11.1 Materials used

Component	Material
Pipe connector	Steel
Connection lines	Copper pipe / Metallflex
Distributor	Brass
Cylinder connection	Brass

11.2 Ambient conditions / Battery capacity / CO_2 consumption

	HFU 486 Top/ HFU 486 Basic	HFU 586 Top/ HFU 586 Basic	HFU 686 Top/ HFU 686 Basic	HFC 286 Top/ HFC 286 Basic	HFC 486 Top/ HFC 486 Basic	HFC 586 Top/ HFC 586 Basic	
Ambient conditions							
Ambient temperature range:	+16 to +31						°C
Battery							
Capacity	approx. 72						h

	HFU 486 Top/ HFU 486 Basic	HFU 586 Top/ HFU 586 Basic	HFU 686 Top/ HFU 686 Basic	HFC 286 Top/ HFC 286 Basic	HFC 486 Top/ HFC 486 Basic	HFC 586 Top/ HFC 586 Basic	
Backup cooling temperature –70 °C							Unit
Unit empty	2.70	2.95	3.10	1.85	2.10	2.40	kg/h
Unit half full	2.35	2.60	2.80	1.90	2.25	2.50	kg/h
Unit full	2.20	2.55	2.70	2.00	2.30	2.55	kg/h
Backup cooling temperature –60 °C							Unit
Unit empty	2.10	2.30	2.60	1.60	1.75	1.80	kg/h
Unit half full	1.90	2.00	2.40	1.75	1.80	2.00	kg/h
Unit full	1.80	2.00	2.35	1.80	1.90	2.00	kg/h
Backup cooling temperature –50 °C							Unit
Unit empty	1.90	2.05	2.30	0.90	1.00	1.20	kg/h
Unit half full	1.70	1.80	2.10	0.90	1.00	1.10	kg/h
Unit full	1.30	1.40	2.00	0.80	0.95	1.00	kg/h
Backup cooling temperature –40 °C							Unit
Unit empty	1.25	1.40	0.75	0.75	0.95	1.00	kg/h
Unit half full	1.10	1.25	0.75	0.75	0.90	1.00	kg/h
Unit full	1.00	1.20	0.70	0.70	0.80	1.00	kg/h

A Safety data sheet for carbon dioxide (CO_2)

Danger areas Carbon dioxide
Carbonic anhydride. The term carbonic acid should only be used for solutions of carbon dioxide in water. Available in liquefied form in pressure containers.

Workplace
Colorless, odorless, inflammable gas, moderately water-soluble, heavier than air, accumulates in pits, basements, sewage systems. In the liquefied state (only at elevated pressures) colorless, easily movable liquid, evaporates quickly, cools down, and forms dry ice when expanding. Released gas forms white fog when reacting with humid air.
Carbon dioxide concentrations exceeding 8 % result in symptoms of poisening due to oxygen deficiency and may cause suffocation.

A. Safety instructions

1. Provide sufficient room ventilation, particularly at ground area. When large amounts of gas escape, aspiration systems at the leak positions are required. Ducts and shafts must be protected against gas intrusion.
2. Fire extinguishers for the fire class of the flammable substances in the workroom must be installed visibly. Their location and emergency exits must be marked with signs.
3. During operation, use closed devices, connect them to te aspiration system, and route the exhaust hoses to the open. Mark gas lines and provide shut-off valves at safe places. Perform documented leak tests at regular intervals. Check hoses at least every six months. Enter rooms in which gas has escaped only with breathing apparatus with independent oxygen supply.
4. Keep containers away from open flames and other heat sources. If possible, provide spraywater cooling. Do not expose to direct sunlight. Do not store in the workroom.
5. Carbon dioxide is contained in the air at a content of approximately 0,4-1,4 %. Air exhaled by humans contains approximately 4 % carbon dioxide. Carbon dioxide accumulates as a result of fermentation and decomposition of organic materials in basements and pits, e.g. wine cellars, ships (fermenting fruits), silos, manure pits, etc. Hazards are furthermore imminent in mines, coal pits, wells and when cleaning carbonated tanks and lines with acid. Recovery mainly from process gases (e.g. ammonia synthesis gas) and for beverages from fermentation gases of distilleries, breweries, and sugar factories. Used for freezing, in chemical industry (e.g. uric acid synthesis), welding, fire extinguishing, heat transfer in nuclear power plants, shielding gas, propellant, greenhouses, and hospitals. Carbon dioxide may react vigorously with a multitude of substances, particularly at elevated temperatures, and is therefore not an all-purpose extinguishing agent. Dangerous reactions are possible e.g. with ammonium or amines.
6. During storage and operation, the containers must be leak tight and kept at an adequately ventilated place. Do not store with flammable and readily ignitible substances and not in staircases, corridors, passages or in their immediate vicinity. Do not throw containers and avoid accumulation of pressure containers outside the permissible storage areas. Observe separation directives. Do not fill or refill pressure gases in storage rooms.
7. Transportation generally in containers for high pressures. Use a suited transportation device. Protective caps and box nuts must be firmly tightened.
8. Do not use excessive force to open valves. When replacing containers, always check the valves of full and partially emptied containers. Do not release gas in closed rooms. When withdrawing gas, the container must be in a horizontal position. Withdraw gas slowly as solid CO_2 particles formed by rapid expansion may be ejected.
9. Bring leaking cylinders immediately into the open; use a salvage container, if required. Release content into the open or return to supplier like cylinders with rest gas.
10. Do not eat, drink, smoke or leave food in the workroom.
11. In case of fire, inform firemen about existence of pressure containers.
12. When transporting, storing, providing, emptying or servicing pressure containers, the detailed local regulations 280 must be observed.

A Safety data sheet for carbon dioxide (CO_2)

13. For works to the system, wear leather safety gloves and safety goggles. When encountering large gas quantities or working in containers or tanks, always use a breathing apparatus with independent oxygen supply. Filter devices are ineffective. Danger of suffocation due to oxygen deficiency.
14. Regular instruction with confirmation of the personnel about dangers and protective measures is recommended.
15. **The containers must be labeled** in accordance with the dangerous substances regulation and with the green danger board no. 2. Form and dimensions of the board may also be in accordance with the regulations of ISO/DP 7225. A dangerous substances labeling in accordance with the dangerous substances regulations is not mandatory.

B. Fire and damage notes

1. Substance not flammable, suppresses oxygen and can even be used for extinguishing fires. Fire extinguishing measures must be in accordance with surroundings. In case of heating or fire, cool with spraywater (do not use water jet!) and remove from danger area, if possible. Heat results in pressure increase and may cause bursting. Stay on the windward side.
2. When large amounts of gas escape, a breathing apparatus with independent oxygen supply must be used.
3. Carbon dioxide does not pollute water.
4. For road transport of large amounts of carbon dioxide, the vehicle must be marked with orange warning boards with label numbers, and accident safety regulations must be kept in the vehicle.

Health protection notes

1. **Action characteristics and toxicity**: Carbon dioxide performs vital physiological functions in the organism. Exhaled air contains approximately 4 %. It is non-toxic, but may cause poisening symptoms and suffocation due to oxygen suppression. For concentrations of 8-10 %, shortness of breath, quickened pulse, increasing blood pressure, headache, ringing in the ears, excitation, nausea, blueness of skin and mucous membranes, vertigo, feeling of weakness, motor disturbance, spasmodic jerks and finally unconciousness are encountered. A burning candle is extinguished at 8-10 %, thereby indicating the beginning of the dangerous concentration. However, extended exposure to carbon dioxide may result in a tolerance that reduces the sensitivity to carbon dioxide. Concentrations exceeding 20 % are lethal; if exposed to such concentrations, the affected person may suddenly collapse unconciously, and death occurs within 5-10 minutes. In case of serious brain damage, death may occur after several days. Persons at risk are among others workers in fruit storage rooms, brewery workers, and miners. Poisening with resulting death were also encountered after entering subterranean wells.
2. **First aid**: Bring affected persons to a comfortable position in fresh air at a quiet, warm place and loosen tight clothing. Rescue persons from basements, pits or similar places only with a breathing apparatus with independent oxygen supply or with a long stick with hook. In case of respiratory standstill, administer mouth-to-mouth resuscitation, in case of shortness of breath supply oxygen. Call emergency physician. In case of unconsciousness, the person must be brought or transported in the stable lateral position. In less critical cases, in-time supply with fresh air will result in quick recovery.
3. **Physician**: Oxygen supply, intubation as necessary, respiration, cardiac massage. Checking of blood gases and acid-base balance required. If necessary, control acidosis with tromethamine or sodium bicarbonate, then symptomatically.

Literature: Konietzko/Dupuis, Handbook of Occupational Medicine; Norpoth, Introduction to Occupational Medicine; Ludewig/Lohs, Acute Poisonings; DFG, Harmful Substances, MFAG Table 615

Recommended disposal for small amounts: Release into the open

A Safety data sheet for carbon dioxide (CO_2)

Properties of carbon dioxide:

- Formula – CO_2
- Molar mass: 44.01 g/mol

Gaseous state:
- Density, 0 °C, 1013 mbar: 1.9770 g/l
- Rel. gas density (air = 1): 1.53
- Ignition temperature, explosion limit: none

Critical point:
- Temperature: 31.04 °C
- Pressure: 73,83 bar
- Density: 468 kg/m³

Triple point:
- Temperature: -56.77 °C
- Pressure: 5.18 bar

Air limit value (TRGS 900): 9000 mg/m³, 5000ml/m³
- Peak limit: 4

Liquid state:
- Melting point, 5.3 bar: -56.6 °C
- Boiling point: -79 °C
- Density at boiling point: 1.5289 g/cm³
- Vapour pressure, 20 °C – 57.3 bar

- Solubility in water, 20 °C – 1.5 g/l
- Water pollution class (WKG no. 256): 0
- Supplied state: Liquefied gas
- Cylinder fill pressure: 57 bar max. (at 20 °C)

1mg/m³ = 0.5467 ml/m³
1 ml/m³ = 1.829 mg/m³

D. Additional notes
CAS no. 124-38-9 EG no. 204-696-9 Index no. UN no. 1013
VBG 1, 61, 109, 125; ZH 1/15, 118, 119, 124, 142, 172, 206; 471, 701, 703, 706, BG; Dangerous Substances Regulation; TRGS 300, 400, 402, 440, 500, 555, 900; Pressure Container Regulations; TRG 100, 280, 300, 360; Ullmann (4) Bs. A5, S. 165; Römpp (10) Vol. 3, P. 2191; Sorbe K-507-0000; Rippen, Handbook for Environmental Chemicals; Hommel Instruction Sheet 115; Gas Atlas; Messer Griesheim, Gase Handbook; GGVS Instruction Sheet (ecomed) 101300; GGVE Instruction Sheet 20.044; GGVSee Instruction Sheet (EmS) 2-09; Danger Class 2

From: Kühn Birett – Instruction Sheets for Dangerous Substances – 116. Supplement 4/99 – K 031 – 2

B Overflow valve

Overflow valve:

To protect the CO_2 cylinders from overpressure, an optional overflow valve can be installed. This overflow valve limits the cylinder pressure to 80 bar. When the pressure exceeds 80 bar, the valve opens to release the gas pressure, then closes again. Unlike a rupture disk, this installation has the advantage that the cylinders will not be completely emptied; only the momentary overpressure is released so that the cylinders lose no more than 5 to 15 % of their filling level, depending on the ambient temperature (see table in Section 1.5).

The overflow valve is installed directly to a CO_2 cylinder. It is also possible to protect several CO_2 cylinders with one overflow valve.For more information, please contact the Service Department of Thermo electron LED GmbH.

C Unit log for CO_2 backup cooling system

Record safety checks, service work, and repairs here.

Unit type:		Order number:	
Serial number:		Service number:	
Location:		Operator's notes:	

Work carried out	Notes	Date	Signature

Thermo
ELECTRON CORPORATION