# Thermo Scientific HERAfreeze

**HFC Series -40C and -86C ULT Chest Freezer**

Operating and Maintenance Manual 7018739 Rev. 2

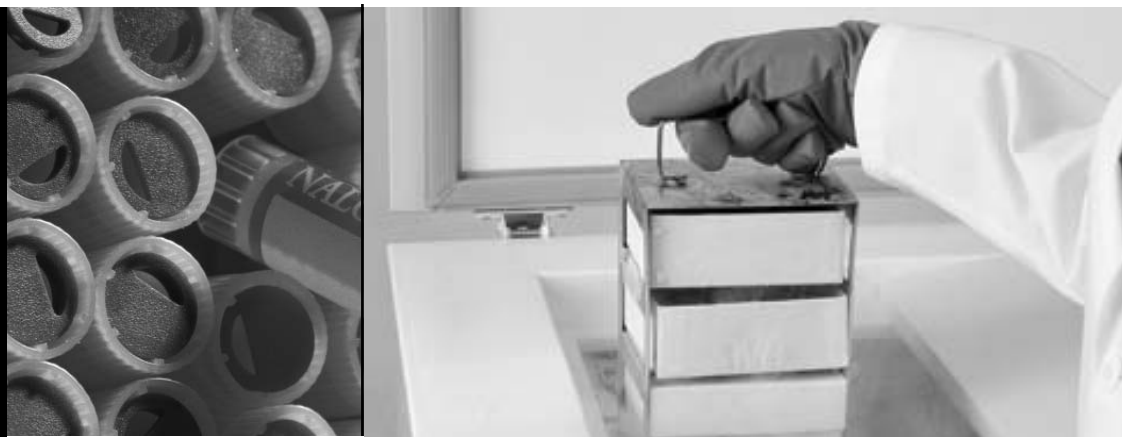

Visit us online to register your warranty
www.thermoscientific.com/labwarranty

Thermo
SCIENTIFIC

### Important installer and user information:

A redundant temperature sensing device has been included in this ULT freezer. This device is a type "T" thermocouple. For convenient access, the thermocouple (Figure 1-3) terminates in an interconnect jack (Figure 1-5) behind the base front cover. (May be located differently in chests. See Section 1.) It is strongly recommended that this thermocouple be attached to a redundant 24 hour 7 day monitoring system with alarm capabilities. Connecting the sensor to a monitoring and alarm system separate from the freezer provides the utmost in product safety, should the integral system fail. ▲

### Packing List

| Part No. | Description | Qty |
|---|---|---|
| 34040 | Key Ring | 1 |
| 213F | Key | 2 |
| 380520 | Neoprene Cap | 2 |
| 510016 | 1/4-20 x 5-1/2" Bolt | 2 |
| 195763 | Retaining Clip | 1 |
| 370563 | Remote Alarm Connector | 1 |

### -86C Models Covered

| Catalog Number | Model | Cu. ft. | Voltage |
|---|---|---|---|
| HFC390TA | 8739 | 3 | 120/60 |
| HFC390TV | 8740 | 3 | 230/50 |
| HFC1390TD | 8742 | 12.7 | 230/50 |
| HFC1390TV | 8743 | 12.7 | 230/60 |
| HFC1390TA | 8744 | 12.7 | 120/60 |
| HFC1790TA | 8745 | 17 | 120/60 |
| HFC1790TV | 8746 | 17 | 230/50 |
| HFC1790TD | 8747 | 17 | 230/60 |
| HFC2090TV | 8749 | 20 | 230/50 |
| HFC2090TD | 8750 | 20 | 230/60 |
| HFC2090TA | 8751 | 20 | 120/60 |

### -40C Models Covered

| Catalog Number | Model | Cu. ft. | Voltage |
|---|---|---|---|
| HFC350TA | 8752 | 3 | 115/60 |
| HFC350TV | 8753 | 3 | 230/50 |
| HFC1350TV | 8754 | 12.7 | 230/50 |
| HFC1350TD | 8755 | 12.7 | 230/60 |
| HFC1350TA | 8756 | 12.7 | 120/60 |
| HFC1750TA | 8757 | 17 | 120/60 |
| HFC1750TV | 8758 | 17 | 230/50 |
| HFC1750TD | 8759 | 17 | 230/60 |
| HFC2050TV | 8760 | 20 | 230/50 |
| HFC2050TD | 8761 | 20 | 230/60 |
| HFC2050TA | 8762 | 20 | 120/60 |

**MANUAL NUMBER 7018739**

| REV | ECR/ECN | DATE | DESCRIPTION | By |
|---|---|---|---|---|
| 2 | 28839/FR-2386 | 8/8/12 | Updated 120230 expl dwg, elec schematics | ccs |
| 1 | 28230/FR-2267 | 2/2/12 | Updated refrig schematics | ccs |
| 0 | FR-2267 | 1/4/12 | Compressor change - Release 7 | ccs |

**Important** Read this instruction manual. Failure to read, understand and follow the instructions in this manual may result in damage to the unit, injury to operating personnel, and poor equipment performance. ▲

**Caution** All internal adjustments and maintenance must be performed by qualified service personnel. ▲

Material in this manual is for information purposes only. The contents and the product it describes are subject to change without notice. Thermo Fisher Scientific makes no representations or warranties with respect to this manual. In no event shall Thermo be held liable for any damages, direct or incidental, arising out of or related to the use of this manual.

© 2012 Thermo Fisher Scientific. All rights reserved.

Important operating and/or maintenance instructions. Read the accompanying text carefully.

Potential electrical hazards. Only qualified persons should perform procedures associated with this symbol.

Equipment being maintained or serviced must be turned off and locked off to prevent possible injury.

Hot surface(s) present which may cause burns to unprotected skin, or to materials which may be damaged by elevated temperatures.

Marking of electrical and electronic equipment, which applies to electrical and electronic equipment falling under the Directive 2002/96/EC (WEEE) and the equipment that has been put on the market after 13 August 2005.

This product is required to comply with the European Union's Waste Electrical & Electronic Equipment (WEEE) Directive 2002/96/EC. It is marked with the WEEE symbol. Thermo Fisher Scientific has contracted with one or more recycling/disposal companies in each EU Member State European Country, and this product should be disposed of or recycled through them. Further information on Thermo's compliance with this directive, the recyclers in your country and information on Thermo Scientific products will be available at www.thermofisher.com.

- ✔ Always use the proper protective equipment (clothing, gloves, goggles, etc.)
- ✔ Always dissipate extreme cold or heat and wear protective clothing.
- ✔ Always follow good hygiene practices.
- ✔ Each individual is responsible for his or her own safety.

## Do You Need Information or Assistance on Thermo Scientific Products?

If you do, please contact us 8:00 a.m. to 6:00 p.m. (Eastern Time) at:

| | |
|---|---|
| 1-740-373-4763 | Direct |
| 1-800-438-4851 | Toll Free, U.S. and Canada |
| 1-877-213-8051 | FAX |
| http://www.thermoscientific.com | Internet Worldwide Web Home Page |
| service.led.marietta@thermofisher.com | Tech Support Email Address |
| www.unitylabservices.com | Certified Service Web Page |

Our **Sales Support** staff can provide information on pricing and give you quotations. We can take your order and provide delivery information on major equipment items or make arrangements to have your local sales representative contact you. Our products are listed on the Internet and we can be contacted through our Internet home page.

Our **Service Support** staff can supply technical information about proper setup, operation or troubleshooting of your equipment. We can fill your needs for spare or replacement parts or provide you with on-site service. We can also provide you with a quotation on our Extended Warranty for your Thermo Scientific products.

Whatever Thermo Scientific products you need or use, we will be happy to discuss your applications. If you are experiencing technical problems, working together, we will help you locate the problem and, chances are, correct it yourself...over the telephone without a service call.

When more extensive service is necessary, we will assist you with direct factory trained technicians or a qualified service organization for on-the-spot repair. If your service need is covered by the warranty, we will arrange for the unit to be repaired at our expense and to your satisfaction.

Regardless of your needs, our professional telephone technicians are available to assist you Monday through Friday from 8:00 a.m. to 6:00 p.m. Eastern Time. Please contact us by telephone or fax. If you wish to write, our mailing address is:

Thermo Fisher Scientific
401 Millcreek Road, Box 649
Marietta, OH 45750

International customers, please contact your local Thermo Scientific distributor.

# Table of Contents

**Section 1 Installation and Start-up . . . . . 1-1**
Control Panel Keys, Display, Indicators . . . . . 1-5
Install Freezer . . . . . 1-7
Displays . . . . . 1-7
RS-232 Communications . . . . . 1-8
Install Wall Bumpers . . . . . 1-8
Choose Location . . . . . 1-8
Remote Alarm Contacts and Analog Output . . . . . 1-9
Connect Unit to Electrical Power . . . . . 1-10
Attach Power Cord . . . . . 1-10
Freezer Start-Up . . . . . 1-11
Set Operating Temperature . . . . . 1-11
Set Low Temperature Alarm . . . . . 1-12
Set High Temperature Alarm . . . . . 1-12
Access Code . . . . . 1-13
Run Mode . . . . . 1-13

**Section 2 Calibrate . . . . . 2-1**
Calibrate Mode . . . . . 2-1
Calibrate Control Probe . . . . . 2-1

**Section 3 Configuration . . . . . 3-1**
Low Alarm Test . . . . . 3-1
High Alarm Test . . . . . 3-1
BUS Battery Test . . . . . 3-2
System Battery Test . . . . . 3-2
Set Access Code . . . . . 3-3
Clear High Stage Alarm . . . . . 3-3
Display Temperature . . . . . 3-3
Back Up System Type . . . . . 3-4
RS485 Address . . . . . 3-4
Reset Excursion . . . . . 3-4
Warm Excursion . . . . . 3-4
Cold Excursion . . . . . 3-4

**Section 4 Alarms . . . . . 4-1**
Lost Communication . . . . . 4-2
Micro Board Failure Alarm . . . . . 4-2
Multiple Alarms . . . . . 4-2
High Stage System Failure Alarm . . . . . 4-2

**Section 5 Maintenance . . . . . 5-1**
Clean Condenser . . . . . 5-1
Clean Air Filter . . . . . 5-1
Replace Battery(s) . . . . . 5-2
Clean Lid Gasket . . . . . 5-2
Defrost Chamber . . . . . 5-2
All Models Except 3 cu ft . . . . . 5-3
3 cu ft Models . . . . . 5-3
Prepare Unit for Storage . . . . . 5-4
PREVENTIVE MAINTENANCE . . . . . 5-5

**Section 6 Factory Installed Options . . . . . 6-1**
Back Up System (BUS) . . . . . 6-1
Install Injection Assembly . . . . . 6-1
Install Temperature Probe . . . . . 6-2
BUS Control Panel . . . . . 6-4
Connect Probe/Solenoid Harness . . . . . 6-4
Set Optional BUS Set Point . . . . . 6-5
Configure Optional Back Up System (BUS) . . . . . 6-5
Test the BUS . . . . . 6-6
Disconnect Fitting Assembly, Transfer Hose . . . . . 6-6
Chart Recorder . . . . . 6-6
Calibrate Chart Recorder . . . . . 6-7
Change Program . . . . . 6-7
Install Chart Paper . . . . . 6-7

**Section 7 Specifications . . . . . 7-1**

**Section 8 Exploded Parts Drawings . . . . . 8-1**

**Section 9 Refrigeration Schematics . . . . . 9-1**

**Section 10 Electrical Schematics . . . . . 10-1**

**Section 11 Warranty Information . . . . . 11-1**

**Appendix Handling Liquid Nitrogen . . . . . A-1**
**Handling Liquid CO2 . . . . . A-4**
**First Aid . . . . . A-5**

# Section 1 Installation and Start-up

Figures 1-1 and 1-2 show the front view of the freezer and indicate the following freezer components:

- Control Panel - keypad, displays and indicators.
- BUS (Optional Back Up System) panel.
- Optional temperature recorder (7 day, one pen) or datalogger.
- Keylock - keyed lid lock.

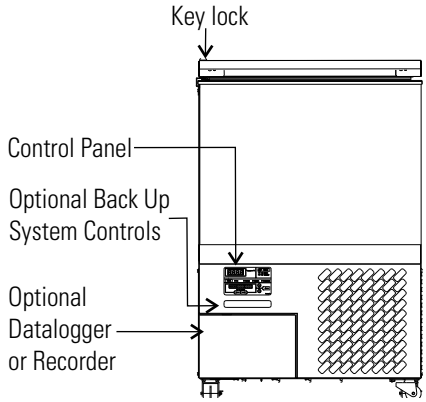


**Figure 1-1.** Front View 3 cu ft Models

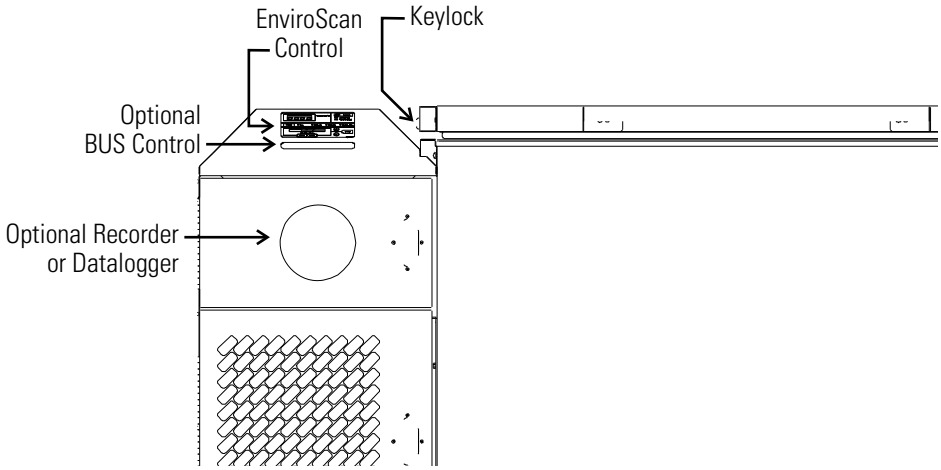


**Figure 1-2.** Front View Remaining Models

Figures 1-3 and 1-4 display the rear view of the freezer and indicate the following freezer components:

- Remote alarm contacts and selectable analog output connection - 0-1V, 4-20mA (default), 0-5V).
- Power inlet for power cord connection.
- Optional BUS connections for probe and solenoid.
- RS-232 or RS-485 interface.
- Power Switch (mains disconnect).

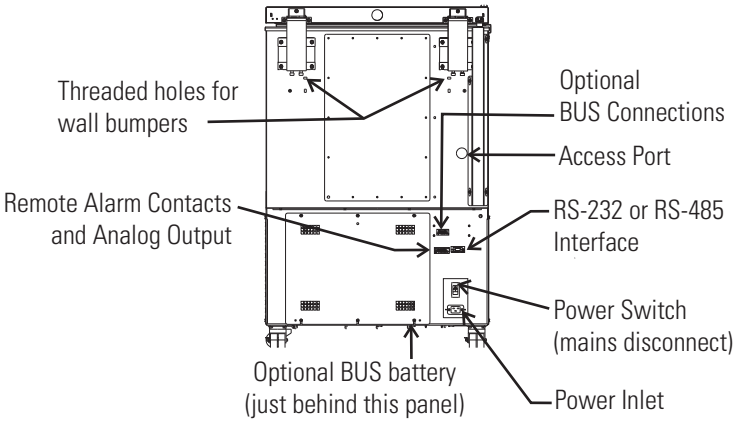


**Figure 1-3.** Rear View 3 cu ft Models

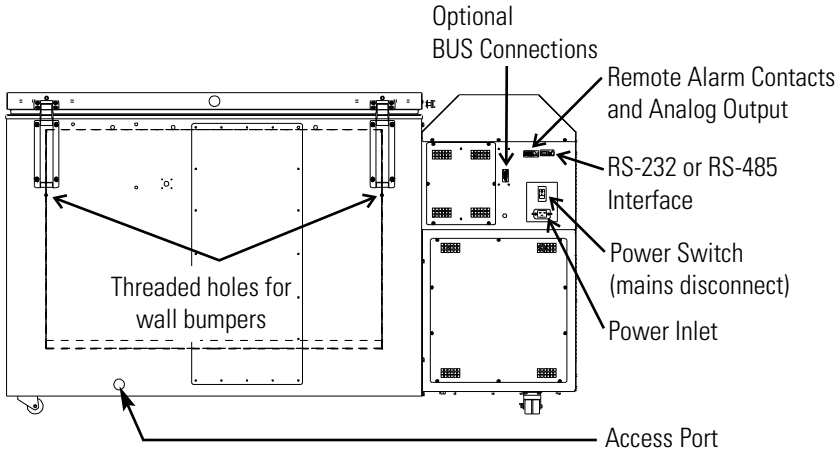


**Figure 1-4.** Rear View Remaining Models

The probe cover houses the control, optional recorder, datalogger, Model 1535 alarm, or BUS probes.

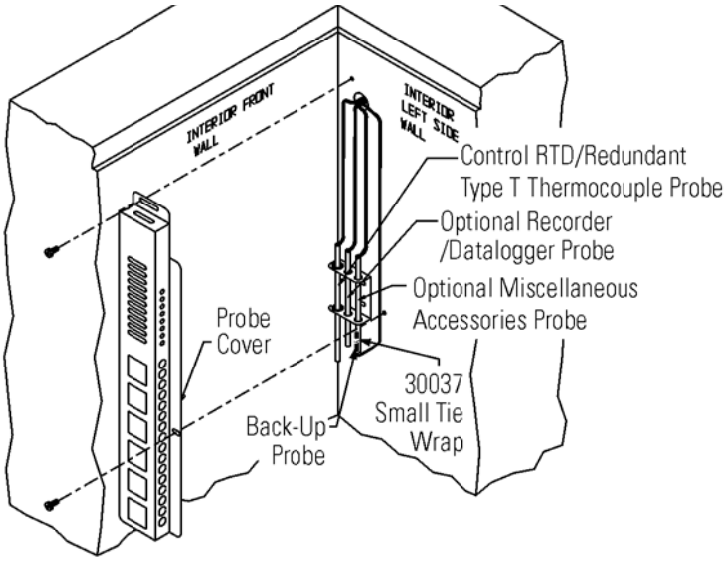


**Figure 1-5.** Probe Cover

Figures 1-6, 1-7, and 1-8 indicate the following components:

- Freezer filter location
- Battery power switch (freezer and BUS)
- Thermocouple receptacle
- Battery mounting bracket
- Freezer and optional BUS battery

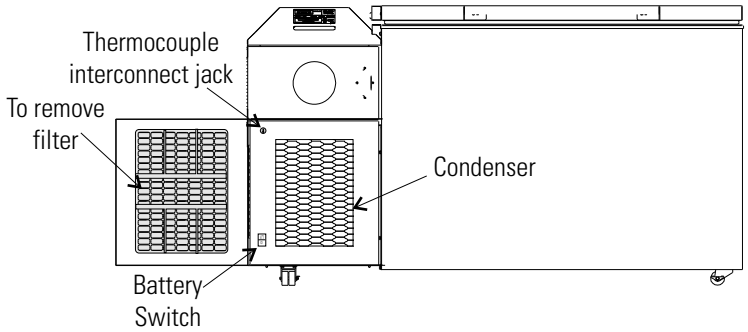


**Figure 1-6.** All Models Except 3 cu ft

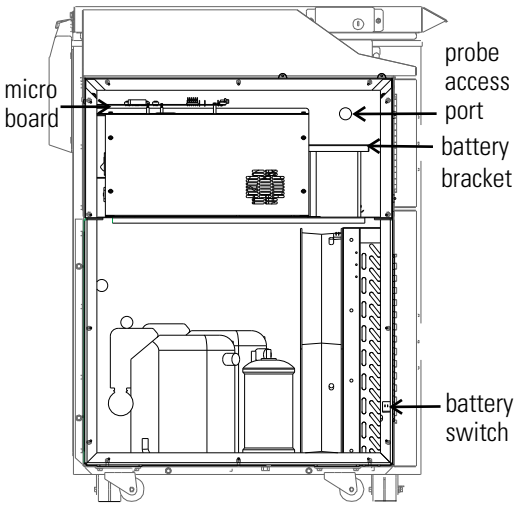


**Figure 1-7.** Freezer Left Side - Sidecar panel removed

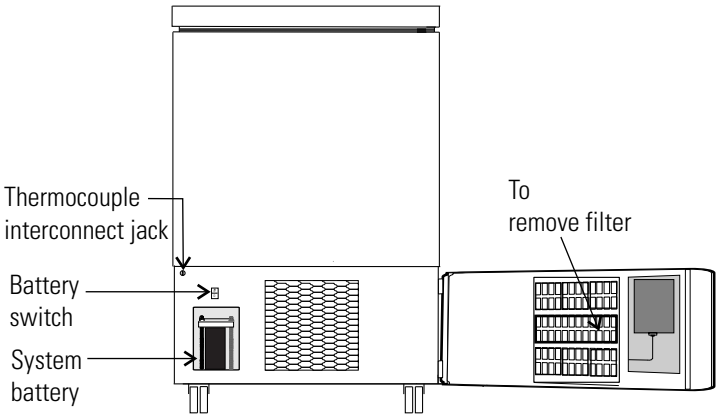


**Figure 1-8.** 3 cu ft Models

## Control Panel Keys, Display, Indicators

**Mode Select Switch** - Used to select Run, Settings, Calibrate and System Configuration Modes.

Mode Select Indicators -

Run: Run Menu

Settings: Set Points Menu

Calibrate: Calibrate Menu

Configuration: Configuration Menu

**Temperature Display** - Displays temperature in degrees Celsius.

**Alarm Indicator** - Light pulses on/off during an alarm condition.

**Silence** - Mutes the audible alarm.

**Low Battery** - indicates a low battery condition of the freezer battery.

**Hot Condenser** - indicates a hot condenser condition.

**Message Center** - displays system status and alarms.

**Scroll for Parameters Arrows** - moves through the choices of the selected mode.

**Up and Down Arrows** - Increases or decreases values, toggles between choices.

**Enter** - Stores the value into computer memory.

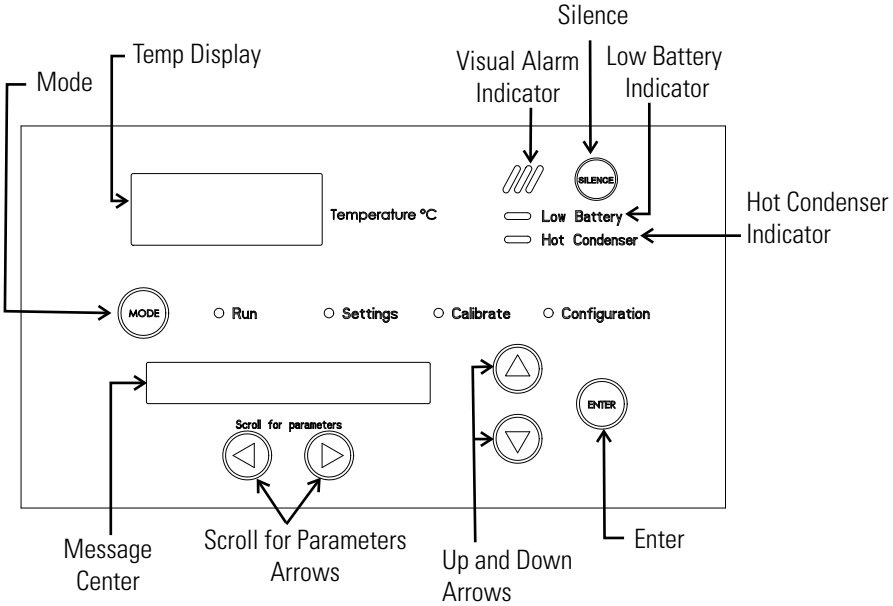


**Figure 1-9.** Control Panel Keys, Display and Indicators

# Panel Keys, Display, Indicators (cont.)

HFC Series freezers have four basic modes which allow freezer setup: Run, Settings, Calibrate and Configuration.

**Run** is the default mode which the freezer will normally be in during operation.

**Settings** is used to enter system set points for freezer operation.

**Calibrate** is used to calibrate various system parameters.

**Configuration** allows for custom setup of various options.

The chart below shows the selections under each of the modes.

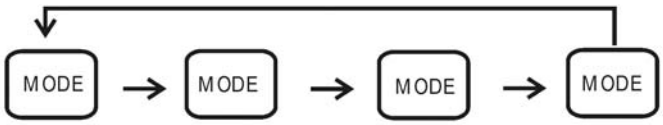


| Run | Settings | Calibrate | Configuration |
|---|---|---|---|
| Default Mode System Ok | Control Set Point | Control Probe | High Alarm Test |
| Line Voltage | High Alarm Set Point | Optional Sample Probe | Low Alarm Test |
| Compensated Voltage | Low Alarm Set Point | | System Battery Test |
| * HSHX Temperature | Optional Back Up System Set Point | | BUS Battery Test |
| | | | Display Temperature |
| | | | * Clear High Stage Alarm |
| | | | Set Access Code |
| | | | RS485 Address |
| | | | BUS type CO2 or LN2 |
| | | | Cold Excursion |
| | | | Warm Excursion |
| | | | Reset Excursion |

**Table 1-1.** Modes of Operation

** -86C units only*

## Panel Keys, Display, Indicators (cont.)

**Scroll for Parameters** Arrows: Steps the operator through the parameters of Settings, Calibrate and Configuration Modes. The right arrow goes to the next parameter, the left arrow returns to the previous parameter.

Up Arrow: Increases or toggles the parameter value that has been selected in the Settings, Calibrate, and Configuration Modes.

**Enter**: Must press Enter key to save to memory all changed values.

Down Arrow: Decreases or toggles the parameter values that have been selected in the Settings, Calibrate, and Configuration Modes.

**Silence** Key: Press to mute the audible alarm. See Section 4 for alarm ringback times.

Message Center: Displays the system status (Mode) at all times. Displays SYSTEM OK during normal operation, or alarm messages if the system detects an alarm condition. See Section 4 - Alarms.

## Displays

There are two displays on the control panel. The temperature display shows the temperature in degrees Celsius. The message center displays the system status (Mode) at all times. The message SYSTEM OK displays during normal operation. Alarm messages are displayed if the system detects an alarm condition. See Section 4 - Alarms.

## Install Freezer

To remove the freezer from the pallet, use a 7/16" wrench to remove all the bolts securing the shipping bracket to the pallet.

**Note** If tipped more than 45°, allow the unit to set upright for 24 hours before start up. ▲

Remove the shipping bracket. Remove the ramp boards from the pallet and place the slotted end over the ramp brackets on the pallet. The support blocks on the ramps will be facing down. Before moving the freezer, make sure the casters are unlocked and moving freely. Align the caster with the ramp boards. Use adequate personnel to roll the freezer off the pallet.

The freezer can be easily pushed to the desired approved location, as described previously. When the freezer is in position, set the front caster brakes.

**Note** Do not move the freezer with the product load inside. ▲

## Choose Location

Locate the freezer on a firm, level surface in an area with an ambient temperature between 18°C and 32°C. Provide ample room to reach the mains disconnect switch (power switch) located on the rear of the freezer.

**Note** For proper ventilation and airflow, a minimum clearance of 5” at the rear and front and a clearance of 8” on the side of the freezer is required. Allow adequate space for lid opening. If ambient increases above 36°C, clearance at the rear of the cabinet must be increased to 8”. ▲

## Install Wall Bumpers

The parts bag, located inside the cabinet, contains the following parts.

| Quantity | Stock # | Description | Purpose |
|---|---|---|---|
| 2 | 510016 | 1/4-20 x 5-1/2” Bolt | Wall Bumper |
| 2 | 380520 | Neoprene Cap | Cap Protector |

Install the bolts into the pre-tapped holes on the back of the compressor section. Install a neoprene cap on each bolt. Refer to Figure 1-2 for the locations of the pre-tapped holes.

## RS-232 Communications

HFC Series freezers have a data communications interface. The factory default setting is RS-232.

The wiring identification for the interface is shown in Figure 1-10. One nine pin, sub "D" style connector is located on the back of the freezer. See Figure 1-2 for the location of the connector on the freezer.

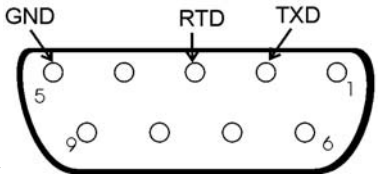


**Figure 1-10.** RS-232 Interface

The freezer transmits temperature information every 60 minutes. A standard DB9 serial extension cable can be used to connect the freezer to a serial device. Some serial devices may require a null modem adapter.

Data format:

Baud . . . . . .1200
Data bits . . . . . .8 (7 bit ASCII with leading zero)
Start bits . . . . . .1
Stop bits . . . . . .2
Parity . . . . . .none

## RS-232 Communications (continued)

The data transfer sequence is transmitted in the following format. X refers to numerical temperature data.

(NUL) (-) XXX (SP) C (SP) (Error Message) (SP) (LF) (CR) (EOT) (SP)

In the event of a CNTRLFAIL, Er07, or the control probe is out of range error, the numerical temperature data (XXX) in the transmission would be replaced by T_ERR.

If no alarm condition exists, spaces will be sent. A total of 20 characters will be sent.

SP - Space
LF - Line feed
CR - Carriage return
EOT - End of text (4)
NUL - Null character (00)

If an alarm condition does exist, "Error Message" in the protocol will be replaced by the following:

UNDERTEMP (temperature above the low alarm setpoint)
OVERTEMP (temperature below the high alarm setpoint)
PWRFAIL (AC power failure)
CNTRLFAIL (Control probe failure)
Er07 (micro failure)
* HSHX FAIL (Heat exchanger failure)
HOT COND (Hot condenser)

**Note** The RS-232 is not compatible with Model 1535 Monitor/Alarm System. ▲

** -86C units only*

## Remote Alarm Contacts and Analog Output

HFC Series freezers have remote alarm contacts and analog output. See Figures 1-3 and 1-4 for the location of the remote alarm contacts. The remote alarm connector is located in the parts bag provided with the manual. It must be installed if connecting the freezer to an alarm system. After installing the wiring from the alarm system to the connector, install the connector to the freezer microboard and secure with the two screws provided. The remote alarm provides a NO (normally open) output, a NC (normally closed) output and COM (common). The contacts will trip on a power outage, high temperature alarm or low temperature alarm. They will also trip on high stage (-86C units only), control probe and microboard failures. Figure 1-11 shows the remote contacts in alarm state.

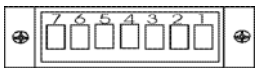


| REMOTE CONTACTS/ANALOG OUTPUT | |
|---|---|
| PIN# 1 | Analog Output + |
| PIN# 2 | Analog Output - |
| PIN# 3 | Not Connected |
| PIN# 4 | Not Connected |
| PIN# 5 | Normally Closed |
| PIN# 6 | Common. |
| PIN# 7 | Normally Open |

CONTACT RATING: 1A @ 30V
CONTACTS IN ALARM STATE

**Figure 1-11.** Remote Alarm Contacts

## Remote Alarm Contacts and Analog Output (cont.)

The analog output function allows the freezer to output signals representing the temperature of the freezer cabinet. The factory default setting is 4-20 mA. Refer to Table 1-2 for output specifications.

**IMPORTANT USER INFORMATION**

Caution! Stored product should be protected by a redundant 24 hour/day monitoring system with alarm capability. An interconnect jack and thermocouple are installed for centralized monitoring, should on-board system fail.

**Table 1-2.** Analog Output Specifications

| | 4-20 mA | 0-1V | 0-5V |
|---|---|---|---|
| Temperature | -100 to +50°C | -100 to +50°C | -100 to +50°C |

## Attach Power Cord

Insert the power cord into the power inlet module. Place the retaining bracket (P/N 195763) over the connector. Tighten retaining screws to secure.

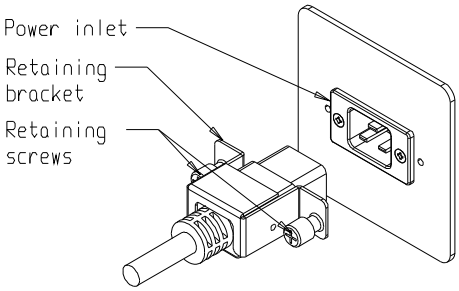


**Figure 1-12.** Power Cord Attachment

## Connect Unit to Electrical Power

**Note** See the serial tag on the side of the unit for electrical specifications or refer to the electrical schematics in this manual. ▲

The freezer should be operated on a dedicated, grounded service. Check the voltage rating on the serial tag of the unit and compare it with the outlet voltage. Then, with the power switch turned off, plug the line cord into the wall outlet.

First, turn on the freezer power switch. Then open the lower front door by grasping the bottom left corner. Locate the battery switch (Figure 1-4) and turn it to Standby mode (⏻). During initial freezer start-up, the system battery may require charging and the Low Battery message may appear in the message center.

**Note** Ensure the battery switch is turned to Standby mode (⏻). The rechargeable batteries require 36 hours to charge at initial start-up. A “Low Battery” alarm may occur until the batteries are fully charged. Should a power failure occur during the initial start-up period, the electronics will have limited operation. ▲

## Freezer Start-Up

With the freezer properly installed and connected to power, system set points can be entered. The following set points can be entered in Settings mode: Control temperature, high temperature alarm set point, low temperature alarm set point, and (optional) BUS set point. Default settings are shown in the table below. See Chart 1-1 for more detail.

| -86C Units | | -40C Units | |
|---|---|---|---|
| Control Set Point | -80°C | Control Set Point | -40°C |
| High Temperature Alarm | -70°C | High Temperature Alarm | -30°C |
| Low temperature alarm | -90°C | Low temperature alarm | -50°C |
| Optional BUS Set Point | -60°C | Optional BUS Set Point | -30°C |

**Note** If the set point is changed and the low temperature and high temperature alarms are set 10° from the set point, the alarm set points will be adjusted automatically to maintain a distance of at least 10° from set point. ▲

## Set Operating Temperature

The freezer has an operating temperature range of -50°C to -86°C (-86C units) or -10°C to -40°C (-40C units), depending on ambient temperature. The freezer is shipped from the factory with a temperature set point of -80°C (-86C units) or -40° (-40C units). To change the operating temperature set point:

1. Press the Mode key until the Settings indicator lights.
2. Press the right arrow until “SET PT = -XX” is displayed in the message center.
3. Press the up/down arrow key until the desired temperature set point is displayed.
4. Press Enter to save the set point.
5. Press the Mode key until the Run indicator lights for Run mode or press the right/left arrow keys to go to next/previous parameter.

If no control keys are pressed, the freezer will automatically return to RUN mode after 5 minutes.

## Set High Temperature Alarm

The high temperature alarm activates an audible/visual warning when the freezer chamber temp reaches or exceeds the high temp alarm set point.

To set the high temperature alarm set point:

1. Press the Mode key until the Set indicator lights.
2. Press right arrow until “HI ALM = -XX” displays in message center.
3. Press the up or down arrow key until the desired high temperature alarm set point is displayed.
4. Press Enter to save the setting.
5. Press the Mode key until the Run indicator lights or press the right or left arrow to go to the next or previous parameter.

If no control keys are pressed, the freezer will automatically return to RUN mode after 5 minutes.

**Note** The high alarm set point must be set at least 5°C from the control set point. ▲

**Note** At initial start-up, the high temperature alarm is disabled until the cabinet reaches set point or 12 hours elapse. ▲

## Set Low Temperature Alarm

The low temperature alarm activates an audible/visual warning when the freezer chamber temp reaches or decreases below low temp alarm set point.

To set the low temperature alarm set point:

1. Press the Mode key until the Settings indicator lights.
2. Press right arrow until “LO ALM = -XX” displays in message center.
3. Press the up or down arrow key until the desired low temperature alarm set point is displayed.
4. Press Enter to save the setting.
5. Press the Mode key until the Run indicator lights or press the right or left arrow to go to the next or previous parameter.

If no control keys are pressed, the freezer will automatically return to RUN mode after 5 minutes.

**Note** The low alarm set point must be set at least 5°C from the control set point. ▲

## Access Code

An access code can be set to prevent unauthorized change of settings in Calibrate, Configuration and Settings mode. (An access code of 000 is required to make changes.) If the access code is not at the default 000, you can not leave RUN mode without entering a code. See Section 3, Configuration for instructions on modifying the access code.

## Run Mode

Run mode is the default mode for the freezer. The run mode displays the cabinet temperature on the temperature display and 'SYSTEM OK' on the message center under normal operating conditions. In addition, the Run mode allows display of the following information:

LINE VOLTAGE

COMPENSATED VOLTAGE

* HSHX TEMPERATURE (heat exchanger temperature); -86C units only

This information is scrolled individually by pressing the right arrow key. In each case, the message center returns to SYSTEM OK in 10 seconds if no keys are pressed.

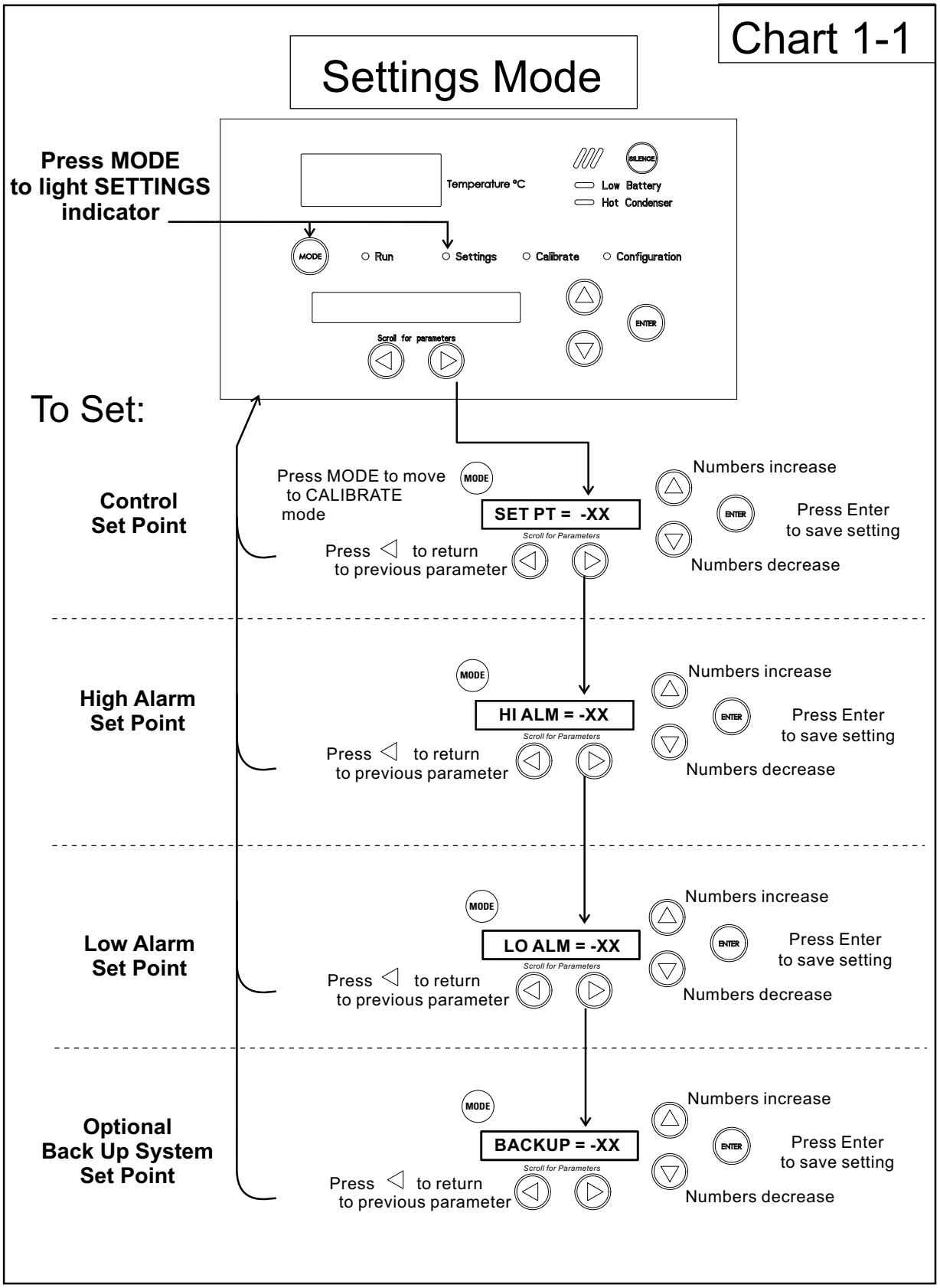
Chart 1-1
Settings Mode
Press MODE to light SETTINGS indicator
Temperature °C
SILENCE
Low Battery
Hot Condenser
MODE
Run
Settings
Calibrate
Configuration
ENTER
Scroll for parameters
To Set:
Control Set Point
Press MODE to move to CALIBRATE mode
SET PT = -XX
Scroll for Parameters
Press ◁ to return to previous parameter
Numbers increase
Press Enter to save setting
Numbers decrease
High Alarm Set Point
HI ALM = -XX
Low Alarm Set Point
LO ALM = -XX
Optional Back Up System Set Point
BACKUP = -XX

# Section 2 Calibrate

## Calibrate Mode

Once the freezer has stabilized, the control probe may need to be calibrated. Calibration frequency is dependent on use, ambient conditions and accuracy required. A good laboratory practice would require at least an annual calibration check. On new installations, all parameters should be checked after the stabilization period.

**Note** Before making any calibration or adjustments to the unit, it is imperative that all reference instruments be properly calibrated. ▲

## Calibrate Control Probe

Plug a type T thermocouple reader into the receptacle located inside the lower door (see Figures 1-4 and 1-6). Compare the control temperature set point to the temperature of the measuring device. See Chart 2-1 at the end of this section for more detail.

1. Press the Mode key until the Calibrate indicator lights.
2. Press the right arrow until “CONT T = -XX.X” appears in the message center.
3. Press up/down arrow to match the display to calibrated instrument.
4. Press Enter to store calibration.
5. Press the Mode key to return to Run or the right/left arrow to go to next/previous parameter.

### Temperature Stabilization Periods

Startup - Allow 12 hours for the temperature in the cabinet to stabilize before proceeding.

Already Operating - Allow at least 2 hours after the display reaches set point for temperature to stabilize before proceeding.

Note During calibration, the temperature display will not be available.

If no keys are pressed for approximately five minutes while in calibration mode, the system will reset to Run mode.

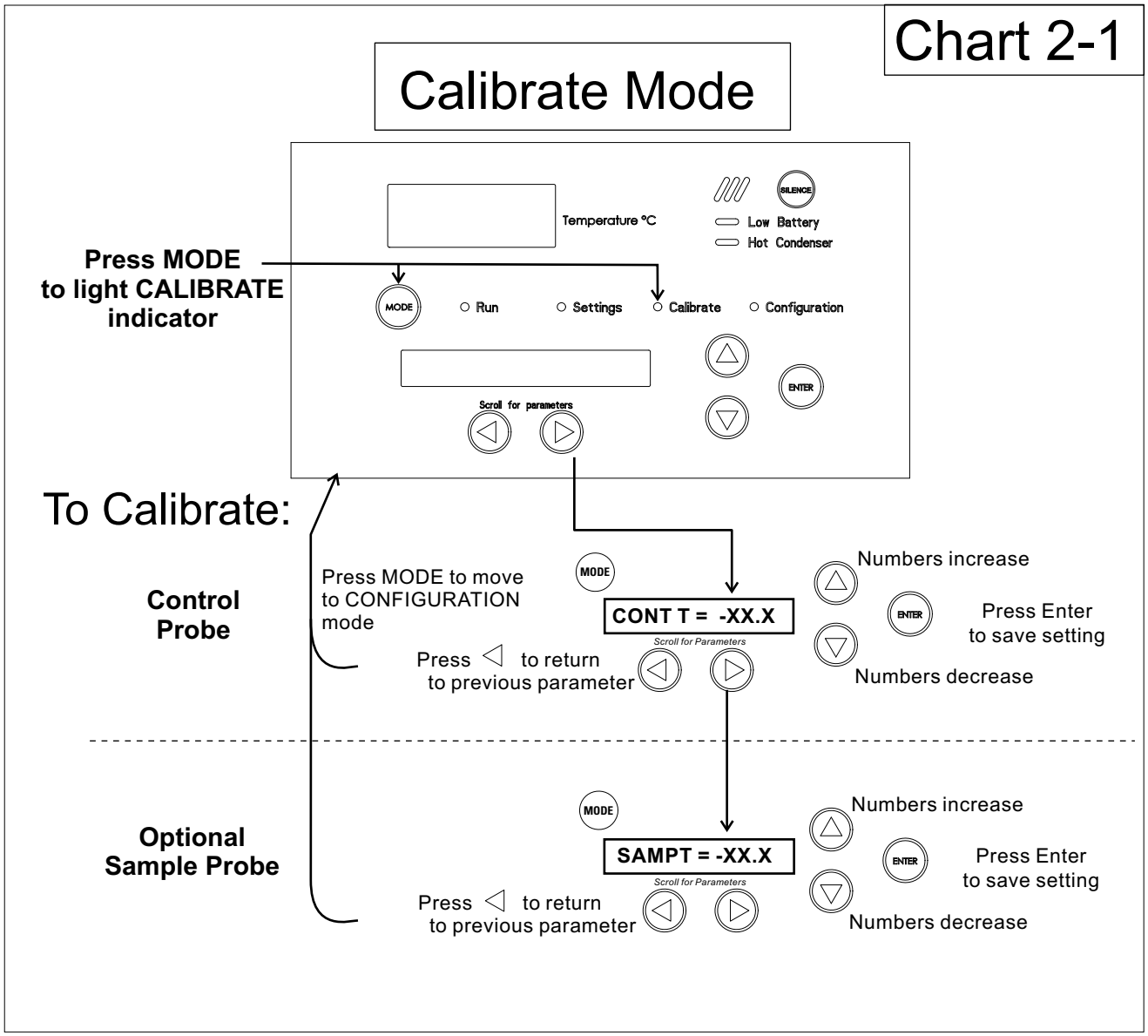
Chart 2-1
Calibrate Mode
Temperature °C
SILENCE
Low Battery
Hot Condenser
Press MODE
to light CALIBRATE
indicator
MODE
Run
Settings
Calibrate
Configuration
ENTER
Scroll for parameters
To Calibrate:
Control
Probe
Press MODE to move
to CONFIGURATION
mode
MODE
CONT T = -XX.X
Scroll for Parameters
Press ◁ to return
to previous parameter
Numbers increase
ENTER
Press Enter
to save setting
Numbers decrease
Optional
Sample Probe
MODE
SAMPT = -XX.X
Scroll for Parameters
Press ◁ to return
to previous parameter
Numbers increase
ENTER
Press Enter
to save setting
Numbers decrease

# Section 3 Configuration

Configuration Mode is used for testing and custom setup of the freezer. The configuration functions listed and described below may not be necessary in all applications, but are available if needed. See Chart 3-1 for more detail.

## High Alarm Test

The high alarm test is used to verify that the high alarm will activate, should the freezer temperature equal or exceed the high alarm set point.

1. Press the Mode key until the Configuration indicator lights.
2. Press the right arrow until HI ALRM TEST is displayed in the message center.
3. Press Enter to initiate the test.

The temperature on the display will begin to increase until the high alarm set point has been reached. The audible alarm will sound and the alarm indicator will flash. Press the Silence key to mute the alarm.

## Low Alarm Test

The low alarm test is used to verify the that low alarm will activate, should the freezer temperature equal or become less than the low alarm set point.

1. Press the Mode key until the Configuration indicator lights.
2. Press the right arrow until LO ALRM TEST is displayed in the message center.
3. Press Enter to initiate the test.

The temperature on the display will begin to decrease until the low alarm set point has been reached. The audible alarm will sound and the alarm indicator will flash. Press the Silence key to mute the alarm.

## System Battery Test

To test the charge of the freezer battery:

1. Press the Mode key until the Configuration indicator lights.
2. Press the right arrow until SYS BAT TEST is displayed in the message center.
3. Press Enter to initiate the test.

TESTING BATT will display during the testing period. Upon completion of the test the message center will display BATT GOOD or BATT FAIL When a test is failed, the audible alarm will sound, the alarm indicator and the Low Battery indicator will light. Press the Silence key and the alarm indicator will go off. The Low Battery light will stay on until a future battery test is performed and passed.

## BUS Battery Test

To test the charge of the BUS battery:

1. Press the Mode key until the Configuration indicator lights.
2. Press the right arrow until BUS BAT TEST is displayed in the message center.
3. Press Enter to initiate the test.

TESTING BATT will display during the testing period. Upon completion of the test the message center will display BBAT GOOD or BBAT FAIL If this test fails, the audible alarm will sound, the alarm indicator and the Low Battery indicator will light. Press the Silence key. The audible alarm and alarm indicator will go off. The Low Battery light will stay on. If the test fails, it is recommended to replace the BUS battery.

## Display Temperature

This function, only available on freezers with the optional sample probe, allows the user to select which temperature is displayed in the temperature display window. The options are CONTROL or SAMPLE.

1. Press the Mode key until the Configuration indicator lights.
2. Press the right arrow until DISP CONTROL or DISP SAMPLE is displayed in the message center.
3. Press up/down arrow to toggle between the two display selections.
4. Press Enter to save.

If control probe is selected, the temperature display will be on continuously. If sample probe is selected, the temperature display will be preceded with a letter 'S'.

## Clear High Stage Alarm (-86C units only)

Should a high stage alarm have occurred, it may become necessary to clear the alarm condition after the condition has been corrected.

1. Press the Mode key until the Configuration indicator lights.
2. Press the right arrow until CLR HS ALARM is displayed in the message center.
3. Press Enter to clear the alarm.

## Set Access Code

To set the Access Code:

1. Press the Mode key until the Configuration indicator lights.
2. Press the right arrow until "SET ACC CODE" is displayed in the message center.
3. Press Enter.
4. The message center will display ACC CODE = 000. Press the up or down arrow key until the desired access code is displayed (000 - 999). Press the left or right arrow key to select digit 1, 2, 3.

**Note** The left and right arrow keys are used to move from the first through the third digits within the access code. ▲

5. Press Enter to save the setting
6. Press the Mode key until the Run indicator lights.A 3-digit Access Code can be entered to avoid unauthorized personnel from changing the set points, calibration, or configuration. A setting of 000 will bypass the access code. The factory setting is 000.

## RS485 Address

If the freezer is configured for RS-485 communications, it will need to have a unique identification address. This address is set through the Configuration mode.

1. Press the Mode key until the Configuration indicator lights.
2. Press the right arrow until RS485ADDR is displayed in the message center.
3. Press Enter. The message center will display **485 ADDR XX**.
4. Press up/down arrow to select the appropriate address for the freezer (1 - 24).
5. Press Enter to save.

## Back Up System Type

This function, which is only available on freezers with the optional back up system (BUS), allows the user to select which type of gas is injected into the freezer chamber. The options are $CO_2$ and $LN_2$.

1. Press the Mode key until the Configuration indicator lights.
2. Press the right arrow until BUS TYPE CO2 or BUS TYPE LN2 is displayed in the message center.
3. Press up/down arrow to toggle between the two display selections.
4. Press Enter to save.

## Cold Excursion

This function displays the coldest temperature recorded by the control probe.

## Warm Excursion

This function displays the warmest temperature recorded by the control probe.

## Reset Excursion

This function resets the cold and warm excursions.

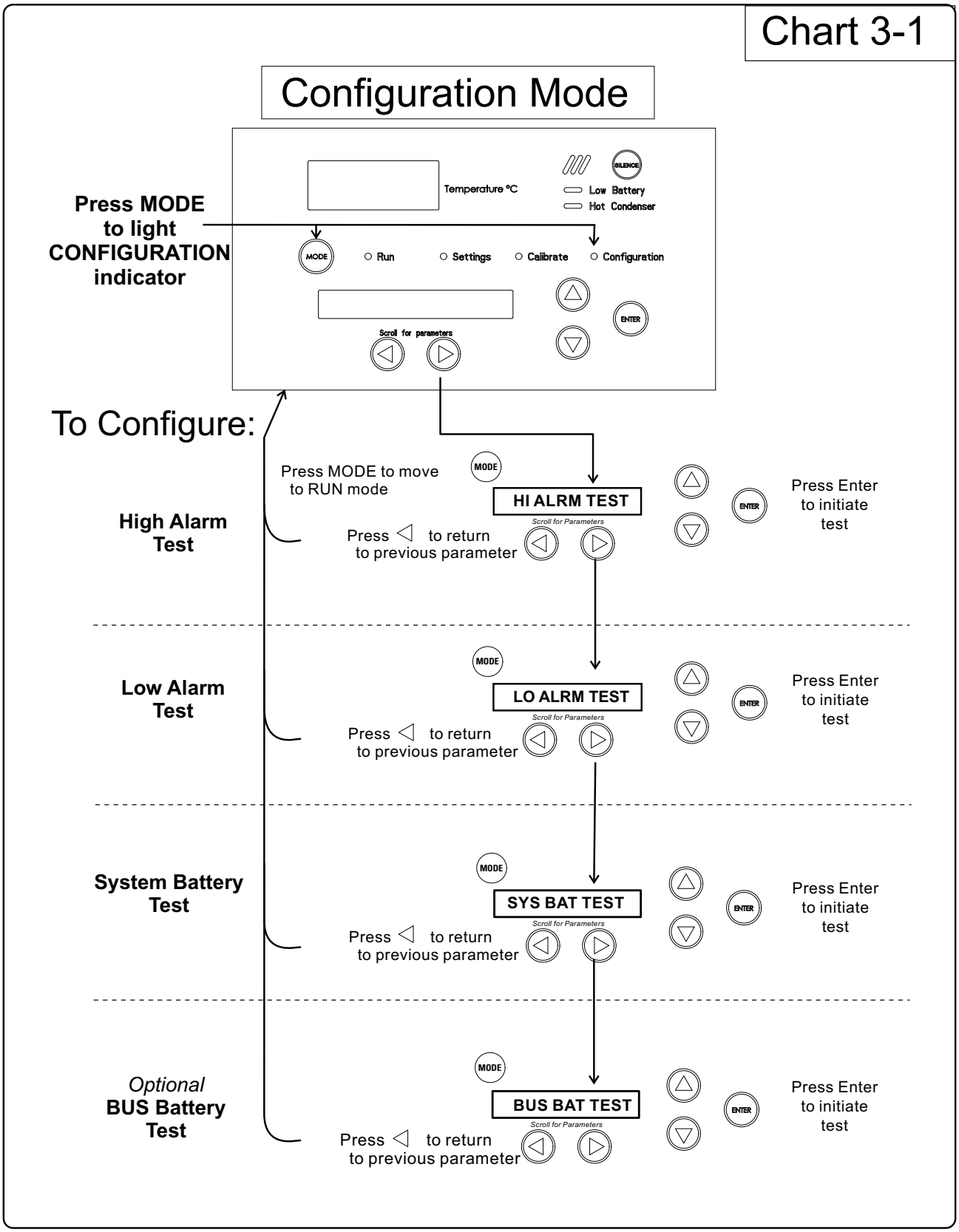
Chart 3-1
Configuration Mode
Temperature °C
SILENCE
Low Battery
Hot Condenser
Press MODE to light CONFIGURATION indicator
MODE
Run
Settings
Calibrate
Configuration
ENTER
Scroll for parameters
To Configure:
Press MODE to move to RUN mode
MODE
HI ALRM TEST
Scroll for Parameters
Press ◁ to return to previous parameter
ENTER
Press Enter to initiate test
High Alarm Test
MODE
LO ALRM TEST
Scroll for Parameters
Press ◁ to return to previous parameter
ENTER
Press Enter to initiate test
Low Alarm Test
MODE
SYS BAT TEST
Scroll for Parameters
Press ◁ to return to previous parameter
ENTER
Press Enter to initiate test
System Battery Test
MODE
BUS BAT TEST
Scroll for Parameters
Press ◁ to return to previous parameter
ENTER
Press Enter to initiate test
Optional BUS Battery Test

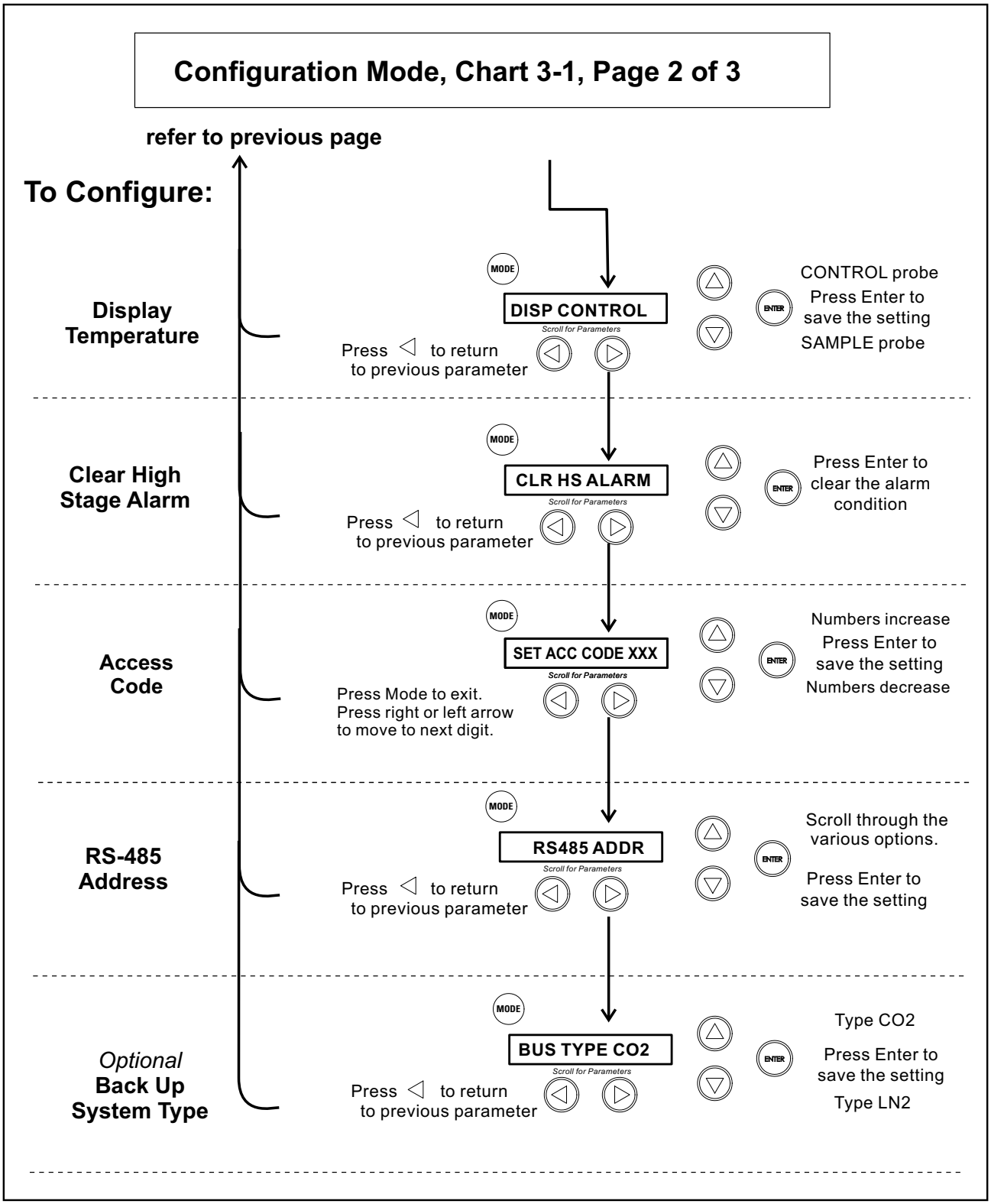
Configuration Mode, Chart 3-1, Page 2 of 3
refer to previous page
To Configure:
Display Temperature
MODE
DISP CONTROL
Scroll for Parameters
Press ◁ to return to previous parameter
CONTROL probe
Press Enter to save the setting
SAMPLE probe
ENTER
Clear High Stage Alarm
MODE
CLR HS ALARM
Scroll for Parameters
Press ◁ to return to previous parameter
Press Enter to clear the alarm condition
ENTER
Access Code
MODE
SET ACC CODE XXX
Scroll for Parameters
Press Mode to exit.
Press right or left arrow to move to next digit.
Numbers increase
Press Enter to save the setting
Numbers decrease
ENTER
RS-485 Address
MODE
RS485 ADDR
Scroll for Parameters
Press ◁ to return to previous parameter
Scroll through the various options.
Press Enter to save the setting
ENTER
Optional Back Up System Type
MODE
BUS TYPE CO2
Scroll for Parameters
Press ◁ to return to previous parameter
Type CO2
Press Enter to save the setting
Type LN2
ENTER

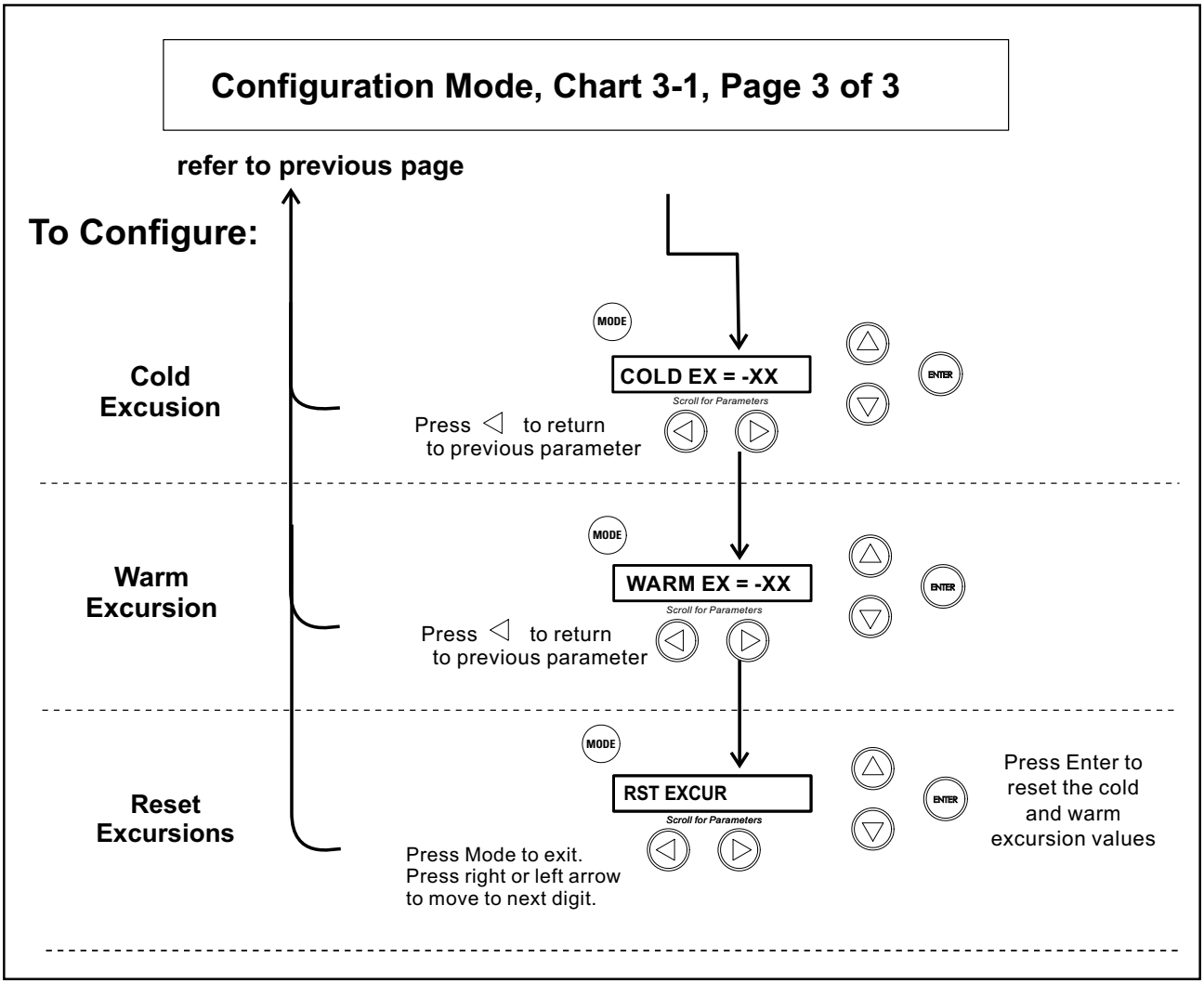
Configuration Mode, Chart 3-1, Page 3 of 3
refer to previous page
To Configure:
Cold Excusion
MODE
COLD EX = -XX
Scroll for Parameters
ENTER
Press ◁ to return to previous parameter
Warm Excursion
MODE
WARM EX = -XX
Scroll for Parameters
ENTER
Press ◁ to return to previous parameter
Reset Excursions
MODE
RST EXCUR
Scroll for Parameters
ENTER
Press Enter to reset the cold and warm excursion values
Press Mode to exit.
Press right or left arrow to move to next digit.

# Section 4 Alarms

The HFC Series freezer alarm system is shown below. When an alarm is active, a message appears in the LED message center. Press the Silence key to mute the audible alarm for the ringback period. The visual alarm continues until the freezer returns to a normal condition. The alarms are momentary alarms only. If an alarm condition occurs and then returns to normal, the freezer automatically clears the alarm condition and the message center.

**Table 4-1.** Alarms

| Description | Message | Delay | Ringback | Relay |
|---|---|---|---|---|
| No alarm condition exists | SYSTEM OK | ---- | ---- | ---- |
| Power Failure | POWER FAIL | 1 min. | 15 min. | Yes |
| High Temperature Alarm | TEMP IS HIGH | 1 min. | 15 min. | Yes |
| Low Temperature Alarm | TEMP IS LOW | 1 min. | 15 min. | Yes |
| Door Ajar | DOOR IS OPEN | 1 min. | 15 min. | No |
| Low Battery* | LOW BATTERY | 1 min. | 8 hours | No |
| Low BUS Battery (optional) | LOW BUS BATT | 1 min | 15 min. | No |
| Control Probe Failure | CNT PRB FLT | 1 min. | 15 min. | Yes |
| Heat Exchanger Probe Failure ** | HSHX PRB FLT | 1 min. | 15 min. | No |
| Condenser Probe | COND PRB FLT | 1 min. | 15 min. | No |
| Sample Probe Failure (optional) | SMPL PRB FLT | 1 min. | 15 min. | No |
| High Stage System Failure ** | HS SYST FAIL | 1 min. | 15 min. | YES |
| Condenser Hot Condition | HOT CONDENSR | 1 min. | none | No |
| Wrong Power | WRONG POWER | 0 min. | none | YES |
| Micro Board Failure | MICRO FAIL | 0 min. | 15 min. | YES |

*All alarm delays and ringback times are +30 seconds.*

**The automatic battery test runs immediately on power-up, then every 8 hours thereafter.*

*** -86C units only*

## High Stage System Failure Alarm (-86C units only)

This condition is created when the high stage compressor and fans run for 30 minutes and are not capable of cooling the interstage heat exchanger to the proper temperature. Under this condition, the high stage compressor and fans will turn off after 30 minutes and an audible and visual alarm will occur along with the "HS SYST FAIL" message in the LED message center.

## Multiple Alarms

When multiple alarm conditions occur, active messages are displayed in the message center one at a time, updating at 5 second intervals. Pressing Silence during multiple alarms causes all active alarms to be silenced and to ring back in 15 minutes.

## Micro Board Failure Alarm

An internal communication failure has occurred with the micro board. During this alarm, the compressor(s) attempt to run continuously. However, with this type of failure, freezer operation becomes undependable.

## Lost Communication

Communication between the micro board and the display board has been lost. Under this condition, the visual alarm flashes along with dashes in the temperature display (----). Contact Technical Services.

| Error | High End Message | Notes |
|---|---|---|
| Er00 | "INV. MODEL" | **Name:** Improper model selected.<br>**Description:** Indicates that DIP SW3 has not selected a proper model or can't be accessed properly.<br>**Response:** Display shows "Er00" and will not start-up until a proper model is selected. Contact Technical Services. |
| ErA1 | " NO FREQUENCY" | This error condition will prevent peripherals (fans, compressors, etc.) from powering up with the incorrect voltage.<br>**Name:** Voltage/Frequency failure<br>**Description:** Indicates the measured RMS line voltage did not agree with the logic level sensed by the micros provided by the installed high voltage PCB; or the measured RMS voltage is not within a tolerable range (<180VAC < 270 for 230VAC unit / <85 VAC < 160 for 115VAC unit); or the frequency measured over 10 cycles was not within a tolerable range (55 Hz < Freq < 70 Hz for 60 Hz units / 40 Hz < Freq < 55 Hz for 50 Hz units)<br>**Response:** This condition is checked at power on reset and if it is active the unit will NOT power up. The unit will indefinitely display "Er_1" in the display and continue to monitor the frequency and voltage. Furthermore, the audible alarm will sound. Other startup error messages may be displayed prior to this message; however, the system will stop the startup sequence for this condition.<br>ErA1 .. No pulses (zero crossings) detected to determine frequency (50 / 60 Hz)<br>ErC1 .. Frequency detected is below 50 Hz<br>Erd1 .. Frequency detected is above 60 Hz (Possible noise spikes on supply voltage)<br>ErE1 .. Unit is 230V and the voltage detected is below the low limit (180VRMS)<br>ErF1 .. Unit is 230V and the voltage detected is above the high limit (260VRMS)<br>Erg1 .. Unit is 115V and the voltage detected is below the low limit (85VRMS)<br>ErH1 .. Unit is 115V and the voltage detected is above the high limit (160VRMS) |
| ErC1 | "FREQ <50Hz" | |
| Erd1 | "FREQ >60Hz" | |
| ErE1 | "VAC < 180V" | |
| ErF1 | "VAC > 260V" | |
| Erg1 | "VAC < 85V" | |
| ErH1 | "VAC > 160V" | |

| Error (cont.) | High End Message | Notes |
|---|---|---|
| Er02 | "CNT PRB FLT" | **Name:** Control (Cabinet) Sensor Failure<br>**Description:** This condition indicates that the control sensor has failed to produce a valid reading for ≥12 consecutive reads (~60 seconds).<br>**Response:** The unit will stage both compressors on (if necessary) and the unit will attempt to head to bottom out. If the sensor recovers, the system will begin to operate normally and respond to the temperature feedback. The remote alarm contacts will become active regardless of the key position for this mode of failure. 'Er02' will be added to the main display queue and the last valid cabinet temperature value will not be displayed |
| Er03 | "HSHX PRB FLT"<br>-86C units only | **Name:** Heat Exchange Sensor Failure<br>**Description:** This condition indicates that the heat exchange sensor has failed to produce a valid reading for ≥12 consecutive reads (~60 seconds).<br>**Response:** The display will show "Er03" only when the button sequence to read the heat exchange sensor is depressed. |
| Er05 | N/A | **Name:** Display Firmware Integrity Failure<br>**Description:** The display firmware has failed to pass its CRC CCITT checksum integrity test.<br>**Response:** The display performs this check at startup and the display board will fail to startup with out any error indication if it does not pass this at power on. |
| Er06 | N/A | **Name:** Micro Firmware Integrity Failure<br>**Description:** The micro firmware has failed to pass its CRC CCITT checksum integrity test.<br>**Response:** This is checked at power on reset and the "Er06" will be displayed for ~10 seconds at startup if this condition exists. |
| Er07 | "MICRO FAIL" | **Name:** Micro Fail - CS5521 SPI Failure / UISR Failure<br>**Description:** This condition indicates a micro board failure due to either the SPI bus is unable to communicate with the ADC device or a UISR event caused the microcontroller to be in an unstable state.<br>**Response:** The unit will try to recover from this fault three times by a hardware reset of the micro board. In the event that the system couldn't rectify the issue, the following sequence of events will occur:<br>1. Remote alarm contacts will become active.<br>2. Buzzer will annunciate audibly and will have a ringback of 15 minutes.<br>3. "Seven segment" display will show "Er07".<br>4. The -86C system will have 10 minute staging between the high stage compressor and the low stage compressor activation (-40C units will activate the compressor).<br>5. The system will go to bottom out temperatures. |

| Error (cont.) | High End Message | Notes |
|---|---|---|
| Er09 | N/A | **Name:** Stuck Button<br>**Description:** This condition indicates that the display board has a stuck button.<br>**Response:** The Er09 will show on the display periodically. |
| Er11 | "COND PRB FLT" | **Name:** Condenser Probe Sensor Failure<br>**Description:** This condition indicates that the condenser probe sensor has failed to produce a valid reading for ≥12 consecutive reads (~60 seconds).<br>**Response:** The display shows "Er11". |
| N/A | "SMPL PRB FLT" | **Name:** Sample Probe Sensor Failure<br>**Description:** This condition indicates that the sample probe sensor has failed to produce a valid reading for ≥12 consecutive reads (~60 seconds).<br>**Response:** The message center shows "SMPL PRB FLT". |
| dErr | N/A | **This is a general display error in which the value being displayed can not be represented within the characters provided.** |
| (four dashes) ---- in display | N/A | **Name:** Lost Communication<br>**Description:** Communication between the micro board and the display board has been lost. Under this condition, the visual alarm flashes along with dashes in thetemperature display (----). Contact Technical Services. |

# Section 5 Maintenance

Wipe down the freezer exterior using soap and water and a general use laboratory disinfectant. Rinse thoroughly with clean water and dry with a soft cloth.

**Caution** Avoid the excessive use of water around the control area due to the risk of electrical shock. Damage to the controls may also result. ▲

## Clean Air Filter

The air filter should be cleaned a minimum of four times per year.

1. Open the front door by grasping the handle.
2. Locate the grille on the door. See Figures 1-6 and 1-8. Grasp the middle of the grille material and gently pull out to remove.
3. Wash the filter material using water and a mild detergent.
4. Dry by pressing between two towels.
5. Install the filter back into the grille and close the door.

Depending upon environmental conditions, the filter may need to be cleaned or replaced more frequently. If the filter becomes torn or excessively dirty, a replacement can be purchased from Thermo. Order part number 398216 for 3 cu. ft. units, or 398217 for 13, 17, and 20 cu. ft. units.

## Clean Condenser

The condenser should be cleaned a minimum of once per year.

1. Open the front door by grasping the handle. See Figures 1-6 amd 1-8.
2. Using a vacuum cleaner, exercising care to not damage the condenser fins, clean the condenser.

Depending upon environmental conditions, the condenser may need to be cleaned more frequently.

## Defrost Chamber

1. Remove all product and place it in another freezer.
2. Turn the unit off and disconnect it from the power source.
3. Turn off the battery switch (O). See Figures 5-1 and 5-2.
4. Open the lid and remove sub-lids. Place towels on the chamber floor.
5. Allow the frost to melt and become loose. Remove with a soft cloth.
7. After defrosting is complete, clean the interior with a non-chloride detergent. Rinse thoroughly with clean water and dry with a soft cloth.
8. Plug unit in and turn power switch on.
9. Turn the battery power switch to Standby mode (⏻).
10. Allow the freezer to operate empty overnight before reloading the product.

## Clean Lid Gasket

The lid gasket should be cleaned a minimum of once per month. Using a soft cloth, remove any frost build-up from the gasket, sub-lids and lids. The clean gasket alarm occurs every three months as a reminder to remove frost build-up from the gasket and doors. Press the Silence key to mute the audible alarm. The lid gasket may need to be cleaned more frequently if dirt or excessive frost build-up prevents the door from closing properly.

## Replace Battery(s)

The following instructions describe the battery replacement procedure for specific models.

### All Models Except 3 cu ft

1. Open the front door by grasping the handle and pulling.
2. Locate the battery power switch (Figure 5-1). Turn the battery power switch to the Off position (O).
3. Remove the four screws holding the recorder bezel to gain access to the battery.
4. Remove the three nuts securing the battery bracket. See Figure 5-1.
5. Remove the bracket and old battery. Discard properly. Install the new battery and secure.

## All Models Except 3 cu ft (continued)

6. Reconnect the battery (red to positive and black to negative).
7. Replace the recorder bezel.
8. Turn the battery power switch to Standby mode (⏻).
9. Close lower panel door.

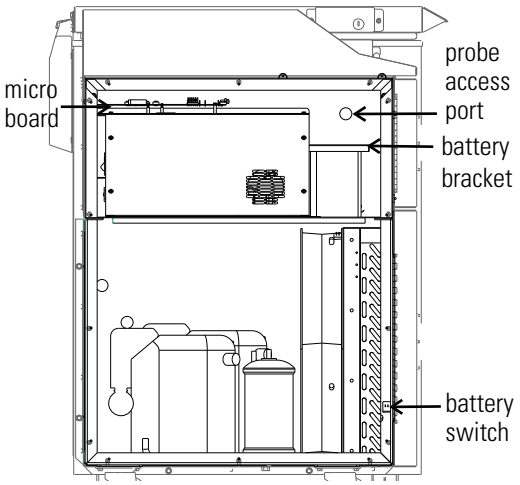


**Figure 5-1.** Battery and Switch location

## 3 cu ft Models

1. Open the front door by grasping the handle and pulling.
2. Locate the battery power switch (Figure 5-2). Turn the battery power switch to the Off position (O).
3. Remove the two nuts securing the battery bracket. See Figure 5-2.
5. Remove the bracket and old battery. Discard properly. Install the new battery and secure.

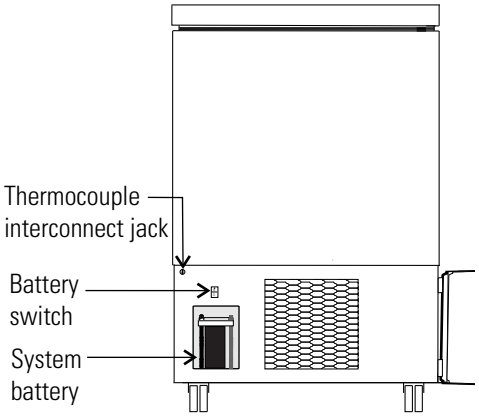


**Figure 5-2.** Battery and Switch location

6. Reconnect the battery (red to positive and black to negative).
7. Replace the recorder bezel.
8. Turn the battery power switch to Standby mode (⏻).
9. Close lower panel door.

**Note** For a consistent and dependable charge, replace the battery every 2 years. Replacement batteries must be rechargeable and are available from Thermo. Refer to the parts list for stock number and description of the replacement batteries (P/N 400159). Dispose of the used batteries in a safe manner and in accordance with good environmental practices. ▲

## Prepare Unit for Storage

Defrost the unit as previously described. This prepares the unit for storage. Turn Off the battery power switch (O). Turn Off the freezer power switch.

**Note** If the unit has been in service, turn it off and disconnect the power cord connector before proceeding with any maintenance. ▲

## PREVENTIVE MAINTENANCE
### Freezers

Your equipment has been thoroughly tested and calibrated before shipment. Regular preventive maintenance is important to keep your unit functioning properly. The operator should perform routine cleaning and maintenance on a regular basis. For maximum performance and efficiency, it is recommended that the unit be checked and calibrated periodically by a qualified service technician.

The following is a condensed list of preventive maintenance requirements. See the specified section of the instruction manual for further details.

We have qualified service technicians, using NIST traceable instruments, available in many areas. For more information on Preventive Maintenance or Extended Warranties, please contact the Technical Services Department.

Cleaning and calibration adjustment intervals are dependent upon use, environmental conditions and accuracy required.

Tips:

- Fill an upright by starting at the bottom near the probe and add racks to one shelf at a time. Allow freezer to recover to set point between shelves.
- Fill a chest by starting at the left side near the probe. Filling with room temperature racks will result in a long pull-down time.
- Fill unit with frozen product to help overall performance; frozen water jugs, for example.
- Always make certain the vacuum relief port is free of frost and ice, to allow for timely re-entry into the freezer after a door opening.

| Action | Monthly | Yearly | Every 2 Years |
|---|---|---|---|
| Verify ambient temperature, <90°F | ✔ | | |
| * Adjust door handle for firm latching, as needed | ✔ | | |
| Check and clean probe cover, gaskets, hinges and lid(s) of ice and snow. See Figure 1-5 for probe location. See “Clean Lid Gasket”. | ✔ *More frequent cleaning may be required, depending on use and environmental conditions.* | | |
| Check air filter. Clean or replace as needed. See “Clean Air Filter”. | | ✔ 4X | |
| Check alarm back-up battery. See “Connect Unit to Electrical Power” in Section 1 and “Replace Battery” in Section 5. | ✔ | | **Replace |
| Check condenser fan motor for unusual motor noise or vibration. | | ✔ | |
| * Verify and document calibration, at the minimum, annually. See Section 2 Calibration. | | ✔ | |
| * Clean condenser compartment and wipe off condenser. See “Clean Condenser” in Section 5. | | ✔ | |

* Qualified service technicians only

** Dispose of properly, according to all state and federal regulations.

# Section 6 Factory Installed Options

## Back Up System (BUS) - P/N 1950533, 1950535

**Note** Before installation of BUS components, make sure the power to the freezer is disconnected, the battery switch is turned off (O) and the freezer has warmed to ambient temperature. ▲

The built-in BUS (back up system) will keep the freezer chamber temperature below the critical level in the event of a power or equipment failure. If power to the freezer fails, or temperature increases to the back up alarm set point, the BUS injects liquefied gas into the chamber to keep the chamber temperature within the specified range.

## Install Injection Assembly

The BUS operates on an internal 12-volt, rechargeable battery which is kept charged during normal operation by the integral battery charger.

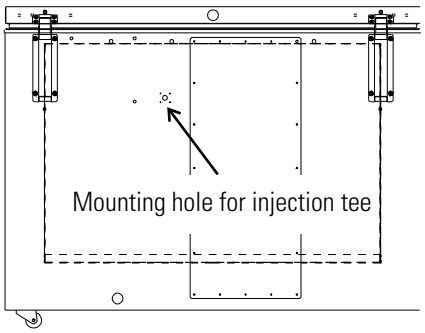


**Figure 6-1.** Mounting location

1. Locate the mounting hole for installing the injection tee assembly. See Figure 6-1.

**Note** Cover open end of injection assembly with tape to keep insulation from entering the nipple. ▲

2. Slide 3/8” flatwasher over open end of nipple.

3. Insert the covered end of the injection assembly through exterior hole.

## Install Injection Assembly (continued)

4. Remove the tape covering the end of the nipple and install the 1/8" NPT brass tee on the open end of the nipple. Place Permagum sealant between the brass tee and the interior top.

5. Go to the interior and seal around injection assembly with Permagum.

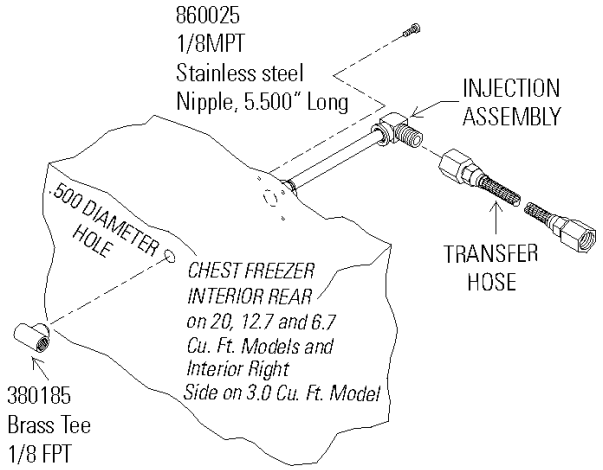


**Figure 6-2.** Injection Assembly

6. Install the transfer hose connecting one end to the injection assembly, the other end to the solenoid valve. Install the solenoid valve to the supply source. The solenoid mounting bracket is not required and may be discarded.

**Note** When selecting a $CO_2$ supply cylinder, it must be equipped with a siphon tube. ▲

## Install Temperature Probe

1. Plug the solenoid/probe connector into the BUS connection. Loop the probe wire back into the base/side car. Secure the connector with a screw on the ends of the connector. The connector is keyed.

2. Route the temperature probe through the probe port. The probe port is located in the upper right corner (viewed from the side) of 12.7 and 20 cu. ft. models, and in the lower right corner (viewed from the back) of 3.0 cu. ft. models.

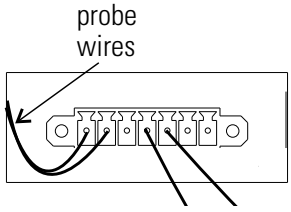


**Figure 6-3.** Probe and Solenoid Connections

## Install Temperature Probe (continued)

3. Carefully remove the existing Permagum sealant from around the probe port opening.

4. Open the freezer lid and locate the probe cover on the upper front left wall. Remove the two Phillips head screws securing the probe cover (see Figure 6-5).

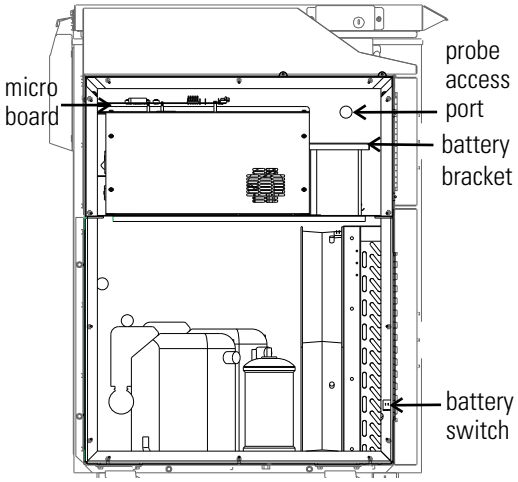


**Figure 6-4.** Probe Access Port

5. Route the BUS probe through the probe port, approximately 12”. Secure the back-up probe to the temperature probe using a small tie wrap (Figure 6-5).

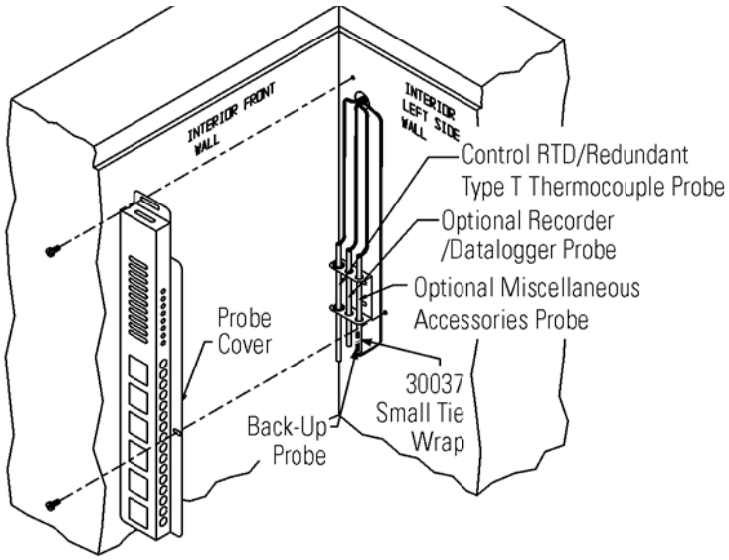


**Figure 6-5.** Probe location

6. Seal around the interior and exterior opening of the probe port with Permagum sealant.

7. Reinstall the probe cover (Figure 6-5).

## Connect Probe/Solenoid Harness

1. Carefully coil the extra probe lead in the compressor compartment, and secure it to the compartment wall with a tie wrap and tie wrap anchor provided. Additional tie wraps and anchors may be used to secure the probe lead to the exterior back wall of the freezer.

2. Loosen the terminal screws on the solenoid. Slide the spade lug connectors under the screws and tighten to secure.

3. Connect power to the freezer. Turn the freezer On, with battery switch Off (O).

   a. The Solenoid Engaged light on the BUS control panel illuminates (no injection occurs). This light stays on until the unit is below BUS setpoint.

   b. The Low Battery indicator may also illuminate.

4. Turn the battery switch to Standby mode (⏻) to charge both batteries.

## BUS Control Panel

The following section describes the configuration and operation of the BUS.

**Warning** When activated, this unit injects liquid nitrogen or carbon dioxide. Liquid nitrogen can cause serious freezing (frostbite) if it comes in contact with unprotected skin or eyes. Nitrogen suppresses oxygen levels and may cause suffocation if area is not well ventilated. Refer to Appendix A for the proper handling of liquid $LN_2$. ▲

**Caution** Make sure the pressure relief valve on any $LN_2$ tank is adjusted to 30 PSI maximum blow-off. ▲

**Warning** Carbon dioxide gas suppresses oxygen levels and may cause suffocation if area is not well ventilated. Refer to “Handling Liquid $CO_2$ in Appendix B of this manual. ▲

## BUS Control Panel (continued)

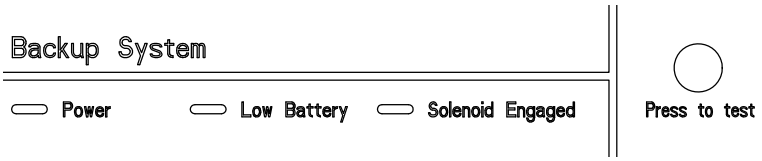


**Figure 6-6.** BUS Control Panel

**Power** - indicates the unit has AC power.

**Low Battery** - battery charge is low. The battery needs replaced or recharged.

**Solenoid Engaged** - BUS has opened the solenoid so it can inject gas ($CO_2$ or $LN_2$).

**Press-To-Test** - Activates the solenoid and injects $LN_2$ or $CO_2$ into the freezer chamber as long as the button is depressed. The solenoid engaged indicator should light. If the Low Battery indicator lights during the test, replace the BUS battery.

**Note** The solenoid will not engage if lid is open. ▲

## Configure Optional Back Up System (BUS)

The optional BUS can be configured for $LN_2$ or $CO_2$ supply. Section 3 - Configuration contains instructions for setting the BUS type.

## Set Optional BUS Set Point

The optional back up system is designed to inject CO2 or LN2 into the freezer compartment if the temperature rises above back up system set point. To set the BUS set point:

1. Press the Mode key until the Settings indicator lights.
2. Press right arrow until “BACKUP = -XX” displays in message center.
3. Press up or down arrow key until desired BUS set point is displayed.
4. Press Enter to save the setting.
5. Press the Mode key until the Run indicator lights, or press the right or left arrow to go to the next or previous parameter.

If no control keys are pressed, the freezer will automatically return to RUN mode after 5 minutes.

## Set Optional BUS Set Point (continued)

**Warning** Changing operating temp set point can affect BUS set point. BUS set point self adjusts to maintain a temp of at least 10°C above the operating temp set point. ▲

**Note** The BUS set point cannot be set any colder than the high temperature alarm set point. (See Section 1 - Setting the High Temperature Alarm). If the back-up system is installed with $CO_2$, then -65°C is the coldest BUS set point that can be used (if the cabinet set point is -75°C or colder). ▲

## Test the BUS

After the freezer has stabilized and both batteries are fully charged, the BUS can be tested to verify proper operation.

1. Disconnect the AC power to the freezer by turning power switch off.
2. As the freezer warms up, verify the BUS injects at the desired temperature. Displayed temperature may vary by a few degrees from inject temperature due to the differences in probe locations.

## Disconnect Fitting Assembly, Transfer Hose

To disconnect the freezer back-up from the gas supply:

1. Close the supply valve.
2. Depress the test button on the Back-Up System control box to remove the gas from the line.
3. Slowly disconnect the fitting assembly from the supply (in the event that any gas remains in the line).

# Chart Recorder

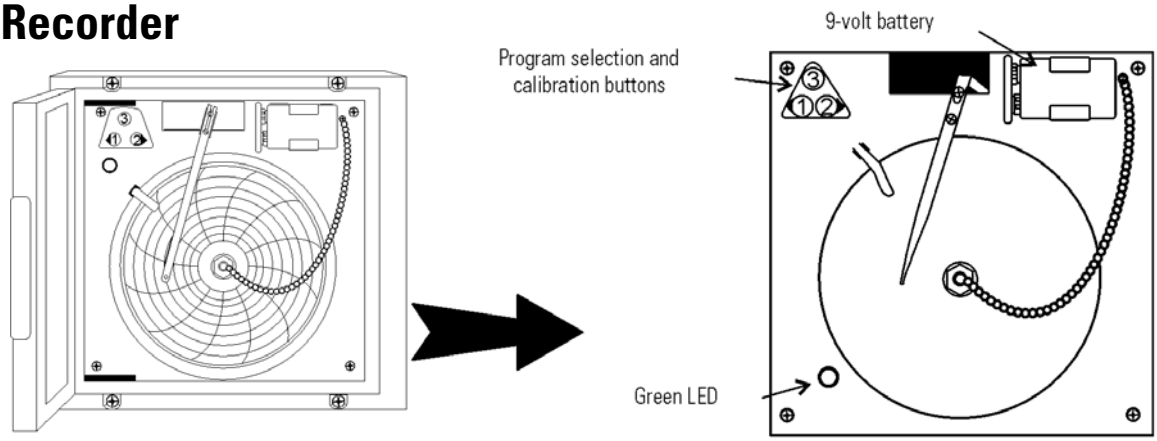


**Figure 6-7.** Recorder Details

## Install Chart Paper

The following section describes the set up and operation of the optional chart recorder.

1. Open the plastic door of the recorder and press button #3 until the pen begins to move outward.
2. Unscrew the knob at the center of the chart and remove the paper.
3. Install the new chart paper, position the paper to the correct time line and replace the knob.
4. Remove the cap from the felt pen and press button #3.

## Change Program

The chart recorder contains eight temperature ranges and is factory-programmed for the freezer. To change the recorder range:

1. Press and hold button #3 for one second, then let the pen move off the chart paper.
2. Press and hold for five seconds either button #1 or button #2.
3. Release the button and the green LED will begin to flash. Count the number of flashes to determine the present program setting.
4. To change the program setting, press the left or right arrows to increase or decrease the count.
5. When the desired program number is flashing, press button #3 to bring the pen arm back onto the chart. Recording will begin in the new program.

| Program | From | To |
|---|---|---|
| 1 | -40 | 30°C |
| 2 | 0 | 60°C |
| 3 | -100 | 38°C |
| 4 | -5 | 50°C |
| 5 | 0 | 100°C |
| 6 | -100 | 200°C |
| 7 | -115 | 50°C |
| 8 | -10 | 70°C |

## Calibrate Chart Recorder

The recorder must be in service for 24 hours before performing the following calibration procedure.

1. Place an accurate thermometer in the chamber next to the recorder probe.
2. Temperature probes for the recorder are located in the left front corner of the freezer chamber (Figure 1-4).
3. After about three minutes, compare the thermometer reading with the chart recorder reading.

## Calibrate Chart Recorder (continued)

4. If an adjustment is necessary, press the #1 button to move the pen to the left or the #2 to move the pen to the right. The button must be held about five seconds before the pen begins to move. Release the button when the pen position matches the thermometer.

**Note** The felt-tip pen on the recorder requires periodic replacement. Usually the ink will appear to fade before replacement becomes necessary. Additional pen tips may be purchased from Thermo. ▲

# Section 7 Specifications

| Number (Model) | HFC390TA (8739) | HFC390TV (8740) |
|---|---|---|
| Temperature Range | -50°C(-58°F) to -86°C(-123°F) in an 18C to 32C * (64.4F to 89.6F) ambient | |
| Exterior Dimensions | 28.5"W x 43.8" H x 29.9" F-B<br>(72.4cm x 111.3cm x 75.9cm)<br>Add 7.9" (20.1cm) to F-B for wall spacer/handle. | |
| Interior Dimensions | 18.5"W x 16.5"H x 18.5" F-B<br>(47.0cm x 41.9cm x 47.0cm) | |
| Capacity | 3.0 cu. ft. (84.9 liters) | |
| Refrigeration | Cascade system, (2) hermetically-sealed compressors | |
| Insulation | Non CFC, foamed-in-place urethane: 5.0" (12.7cm) cabinet; 2.0" (5.0cm) lid; 1.0" (12.5cm) sub-lids | |
| Electrical -<br>Nominal voltage ±10% | 120VAC, 1 PH, 60 Hz, 10.5 FLA<br>Operating Range: 108VAC-130VAC | 230VAC, 1 PH, 50 Hz, 5.4 FLA<br>Operating Range: 208VAC-240VAC |
| Breaker Requirements | 20 Amp Dedicated Circuit,<br>20 Amp Time Delay Breaker | 15 Amp Dedicated Circuit,<br>15 Amp Time Delay Breaker |
| Shipping Weight | 432 lbs. (196 kg) | |

| Number (Model) | HFC1390TD (8742) | HFC1390TV (8743) | HFC1390TA (8744) |
|---|---|---|---|
| Temperature Range | -50°C(-58°F) to -86°C(-123°F) in an 18C to 32C * (64.4F to 89.6F) ambient | | |
| Exterior Dimensions | 72.0"W x 40.5" H x 33.4" F-B<br>(182.9cm x 102.9cm x 84.8cm)<br>Add 7.9" (20.1cm) to F-B for wall spacer/handle. | | |
| Interior Dimensions | 42.5"W x 28.0"H x 18.5" F-B<br>(108.0cm x 71.1cm x 47.0cm) | | |
| Capacity | 12.7 cu. ft. (360 liters) | | |
| Refrigeration | Cascade system, (2) hermetically-sealed compressors | | |
| Insulation | Non CFC, foamed-in-place urethane: 5.0" (12.7cm) cabinet; 2.0" (5.0cm) lid; 1.0" (12.5cm) sub-lids | | |
| Electrical -<br>Nominal voltage ±10% | 230VAC, 1 PH, 50 Hz, 12.0 FLA<br>Operating Range: 208VAC-240VAC | 230VAC, 1 PH, 60 Hz, 12.0 FLA<br>Operating Range: 208VAC-240VAC | 120VAC, 1 PH, 60 Hz, 16.0 FLA<br>Operating Range: 108VAC-130VAC |
| Breaker Requirements | 15 Amp Dedicated Circuit,<br>15 Amp Time Delay Breaker | 15 Amp Dedicated Circuit,<br>15 Amp Time Delay Breaker | 20 Amp Dedicated Circuit,<br>20 Amp Time Delay Breaker |
| Shipping Weight | 716 lbs. (325 kg) | | |

| **Number (Model)** | **HFC1790TA (8745)** | **HFC1790TV (8746)** | **HFC1790TD (8747)** |
|---|---|---|---|
| **Temperature Range** | -50°C(-58°F) to -86°C(-123°F) in an 18C to 32C * (64.4F to 89.6F) ambient | | |
| **Exterior Dimensions** | 87.6”W x 40.5” H x 33.8” F-B<br>(222.5cm x 102.9cm x 85.9cm)<br>Add 7.9” (20.1cm) to F-B for wall spacer/handle. | | |
| **Interior Dimensions** | 58.8”W x 28.0”H x 18.5” F-B<br>(149.4cm x 71.1cm x 47.0cm) | | |
| **Capacity** | 17.0 cu. ft. (481.4 liters) | | |
| **Refrigeration** | Cascade system, (2) hermetically-sealed compressors | | |
| **Insulation** | Non CFC, foamed-in-place urethane: 5.0" (12.7cm) cabinet; 2.0" (5.0cm) lid; 1.0" (12.5cm) sub-lids | | |
| **Electrical-**<br>Nominal voltage ±10% | 120VAC, 1 PH, 60 Hz, 16.0 FLA<br>Operating Range: 108VAC-130VAC | 230VAC, 1 PH, 50 Hz, 12.0 FLA<br>Operating Range: 208VAC-240VAC | 230VAC, 1 PH, 60 Hz, 12.0 FLA<br>Operating Range: 208VAC-240VAC |
| **Breaker Requirements** | 20 Amp Dedicated Circuit,<br>20 Amp Time Delay Breaker | 15 Amp Dedicated Circuit,<br>15 Amp Time Delay Breaker | 15 Amp Dedicated Circuit,<br>15 Amp Time Delay Breaker |
| **Shipping Weight** | 821 lbs. ( 372 kg) | | |

| **Number (Model)** | **HFC2090TV (8749)** | **HFC2090TD (8750)** | **HFC2090TA (8751)** |
|---|---|---|---|
| **Temperature Range** | -50°C(-58°F) to -86°C(-123°F) in an 18C to 32C * (64.4F to 89.6F) ambient | | |
| **Exterior Dimensions** | 96.0”W x 40.5” H x 33.4” F-B<br>(243.8cm x 102.9cm x 84.8cm)<br>Add 7.9” (20.1cm) to F-B for wall spacer/handle. | | |
| **Interior Dimensions** | 66.5”W x 28.0”H x 18.5” F-B<br>(168.9cm x 71.1cm x 47.0cm) | | |
| **Capacity** | 20.0 cu. ft. (566.3 liters) | | |
| **Refrigeration** | Cascade system, (2) hermetically-sealed compressors | | |
| **Insulation** | Non CFC, foamed-in-place urethane: 5.0" (12.7cm) cabinet; 2.0" (5.0cm) lid; 1.0" (12.5cm) sub-lids | | |
| **Electrical-**<br>Nominal voltage ±10% | 230VAC, 1 PH, 50 Hz, 12.0 FLA<br>Operating Range: 208VAC-240VAC | 230VAC, 1 PH, 60 Hz, 12.0 FLA<br>Operating Range: 208VAC-240VAC | 120VAC, 1 PH, 60 Hz, 16.0 FLA<br>Operating Range: 108VAC-130VAC |
| **Breaker Requirements** | 15 Amp Dedicated Circuit,<br>15 Amp Time Delay Breaker | 15 Amp Dedicated Circuit,<br>15 Amp Time Delay Breaker | 20 Amp Dedicated Circuit,<br>20 Amp Time Delay Breaker |
| **Shipping Weight** | 833 lbs. ( 378 kg) | | |

| Number (Model) | HFC350TA (8752) | HFC350TV (8753) |
|---|---|---|
| **Temperature Range** | -10°C (-14°F) to -40°C (-40°F) in an 18C to 32C * (64.4F to 89.6F) ambient | |
| **Exterior Dimensions** | 28.5”W x 43.8” H x 29.9” F-B<br>(72.4cm x 111.3cm x 75.9cm)<br>Add 7.9” (20.1cm) to F-B for wall spacer/handle. | |
| **Interior Dimensions** | 18.5”W x 16.5”H x 18.5” F-B<br>(47.0cm x 41.9cm x 47.0cm) | |
| **Capacity** | 3.0 cu. ft. (84.9 liters) | |
| **Refrigeration** | Hermetically-sealed compressor | |
| **Insulation** | Non CFC, foamed-in-place urethane: 5.0" (12.7cm) cabinet; 2.0" (5.0cm) lid; 1.0" (12.5cm) sub-lids | |
| **Electrical-**<br>Nominal voltage ±10% | 115VAC, 1 PH, 60 Hz, 6.0 FLA<br>Operating Range: 108VAC-130VAC | 230VAC, 1 PH, 50 Hz, 3.0 FLA<br>Operating Range: 208VAC-240VAC |
| **Breaker Requirements** | 20 Amp Dedicated Circuit,<br>20 Amp Time Delay Breaker | 15 Amp Dedicated Circuit,<br>15 Amp Time Delay Breaker |
| **Shipping Weight** | 432 lbs. (196kg) | |

| Number (Model) | HFC1350TV (8754) | HFC1350TD (8755) | HFC1350TA (8756) |
|---|---|---|---|
| **Temperature Range** | -10°C (-14°F) to -40°C (-40°F) in an 18C to 32C * (64.4F to 89.6F) ambient | | |
| **Exterior Dimensions** | 72.0”W x 40.5” H x 33.4” F-B<br>(182.9cm x 102.9cm x 84.8cm)<br>Add 7.9” (20.1cm) to F-B for wall spacer/handle. | | |
| **Interior Dimensions** | 42.5”W x 28.0”H x 18.5” F-B<br>(108.0cm x 71.1cm x 47.0cm) | | |
| **Capacity** | 12.7 cu. ft. (360 liters) | | |
| **Refrigeration** | Hermetically-sealed compressor | | |
| **Insulation** | Non CFC, foamed-in-place urethane: 5.0" (12.7cm) cabinet; 2.0" (5.0cm) lid; 1.0" (12.5cm) sub-lids | | |
| **Electrical-**<br>Nominal voltage ±10% | 230VAC, 1 PH, 50 Hz, 3.0 FLA<br>Operating Range: 208VAC-240VAC | 230VAC, 1 PH, 60 Hz, 3.0 FLA<br>Operating Range: 208VAC-240VAC | 120VAC, 1 PH, 60 Hz, 6.0 FLA<br>Operating Range: 108VAC-130VAC |
| **Breaker Requirements** | 15 Amp Dedicated Circuit,<br>15 Amp Time Delay Breaker | 15 Amp Dedicated Circuit,<br>15 Amp Time Delay Breaker | 20 Amp Dedicated Circuit,<br>20 Amp Time Delay Breaker |
| **Shipping Weight** | 716 lbs. (325 kg) | | |

| **Number (Model)** | **HFC1750TA (8757)** | **HFC1750TV (8758)** | **HFC1750TD (8759)** |
|---|---|---|---|
| **Temperature Range** | -10°C (-14°F) to -40°C (-40°F) in an 18C to 32C * (64.4F to 89.6F) ambient | | |
| **Exterior Dimensions** | 87.6”W x 40.5” H x 33.8” F-B<br>(222.5cm x 102.9cm x 85.9cm)<br>Add 7.9” (20.1cm) to F-B for wall spacer/handle. | | |
| **Interior Dimensions** | 58.8”W x 28.0”H x 18.5” F-B<br>(149.4cm x 71.1cm x 47.0cm) | | |
| **Capacity** | 17.0 cu. ft. (481.4 liters) | | |
| **Refrigeration** | Hermetically-sealed compressor | | |
| **Insulation** | Non CFC, foamed-in-place urethane: 5.0" (12.7cm) cabinet; 2.0" (5.0cm) lid; 1.0" (12.5cm) sub-lids | | |
| **Electrical-**<br>Nominal voltage ±10% | 120VAC, 1 PH, 60 Hz, 9.0 FLA<br>Operating Range: 108VAC-130VAC | 230VAC, 1 PH, 50 Hz, 7.0 FLA<br>Operating Range: 208VAC-240VAC | 230VAC, 1 PH, 60 Hz, 7.0 FLA<br>Operating Range: 208VAC-240VAC |
| **Breaker Requirements** | 20 Amp Dedicated Circuit,<br>20 Amp Time Delay Breaker | 15 Amp Dedicated Circuit,<br>15 Amp Time Delay Breaker | 15 Amp Dedicated Circuit,<br>15 Amp Time Delay Breaker |
| **Shipping Weight** | 821 lbs. (372kg) | | |

| **Number (Model)** | **HFC2050TV (8760)** | **HFC2050TD (8761)** | **HFC2050TA (8762)** |
|---|---|---|---|
| **Temperature Range** | -10°C (-14°F) to -40°C (-40°F) in an 18C to 32C * (64.4F to 89.6F) ambient | | |
| **Exterior Dimensions** | 96.0”W x 40.5” H x 33.4” F-B<br>(243.8cm x 102.9cm x 84.8cm)<br>Add 7.9” (20.1cm) to F-B for wall spacer/handle. | | |
| **Interior Dimensions** | 66.5”W x 28.0”H x 18.5” F-B<br>(168.9cm x 71.1cm x 47.0cm) | | |
| **Capacity** | 20.0 cu. ft. (566.3 liters) | | |
| **Refrigeration** | Hermetically-sealed compressor | | |
| **Insulation** | Non CFC, foamed-in-place urethane: 5.0" (12.7cm) cabinet; 2.0" (5.0cm) lid; 1.0" (12.5cm) sub-lids | | |
| **Electrical-**<br>Nominal voltage ±10% | 230VAC, 1 PH, 50 Hz, 6.5 FLA<br>Operating Range: 208VAC-240VAC | 230VAC, 1 PH, 60 Hz, 6.5 FLA<br>Operating Range: 208VAC-240VAC | 120VAC, 1 PH, 60 Hz, 10.0 FLA<br>Operating Range: 108VAC-130VAC |
| **Breaker Requirements** | 15 Amp Dedicated Circuit,<br>15 Amp Time Delay Breaker | 15 Amp Dedicated Circuit,<br>15 Amp Time Delay Breaker | 20 Amp Dedicated Circuit,<br>20 Amp Time Delay Breaker |
| **Shipping Weight** | 833 lbs. (378 kg) | | |

### Certifications

Declaration of Conformity is available from the factory

### Safety Specifications

Indoor Use Only
Altitude - up to 2,000 meters
Temperature - 5°C to 43°C
Humidity - Maximum RH 80% for temperatures up to 31°C, decreasing linearly to 50% RH at 40°C
Mains Supply Fluctuations - Mains supply voltage fluctuations not to exceed ±10% of the nominal voltage
Installation Category II [1]
Pollution Degree 2 [2]
Class of Equipment I

### Intended Use

This product is intended for use as a General Purpose Laboratory Freezer for storing samples or inventory between -40 and -86C.

This unit is not intended for use in an explosive environment, nor to be used for the storage of flammable inventory. This unit is not intended for use in a Class II medical application as defined by Title 21 of the Federal Code of Regulations.

---

[1] Installation category (overvoltage category) defines the level of transient overvoltage which the instrument is designed to withstand safely. It depends on the nature of the electricity supply and its overvoltage protection means. For example, in CAT II which is the category used for instruments in installations supplied from a supply comparable to public mains such as hospital and research laboratories and most industrial laboratories, the expected transient overvoltage is 2500V for a 230V supply and 1500V for a 120V supply.

[2] Pollution degree describes the amount of conductive pollution present in the operating environment. Pollution degree 2 assumes that normally only non-conductive pollution such as dust occurs with the exception of occasional conductivity caused by condensation.

| BILL OF MATERIALS | | |
|---|---|---|
| ITEM NO. | PART NO. | PART DESCRIPTION |
| 1 | 209017 | DRYER |
| 2 | 211051 | HEAT EXCHANGER ASSEMBLY |
| 3 | 227927 | HIGH STAGE CAP. TUBE |
| 4 | 227928 | LOW STAGE CAP. TUBE |

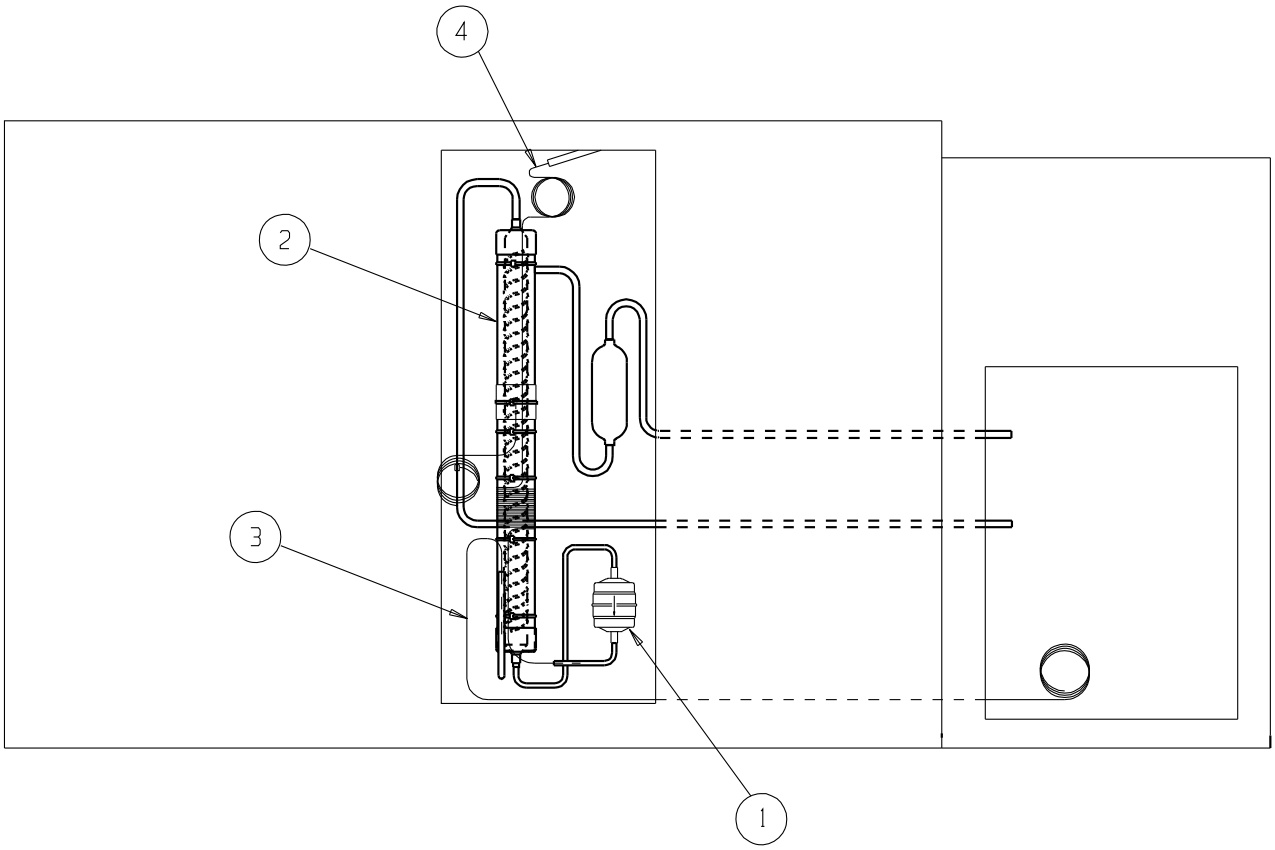


Exploded Drawing
12.7, 17, 20 Chest
Freezer - Interstage
Heat Exchanger Assy

8704-201-1 Rev. 0
Page 1 of 1

BILL OF MATERIALS

| ITEM NO. | PART NO. | PART DESCRIPTION |
|---|---|---|
| 1 | 202003 | ACCUMULATOR ASSEMBLY |
| 2 | 209019 | DRYER |
| 3 | 211044 | HEAT EXCHANGER ASSEMBLY |
| 4 | 227992 | HIGH & LOW STAGE CAP. TUBE |

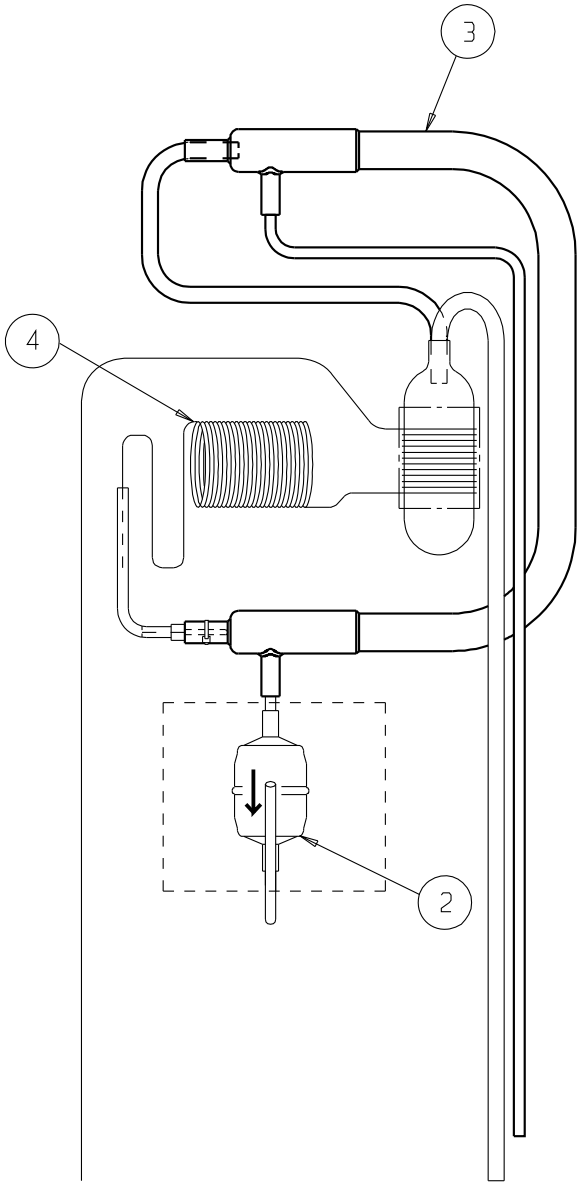


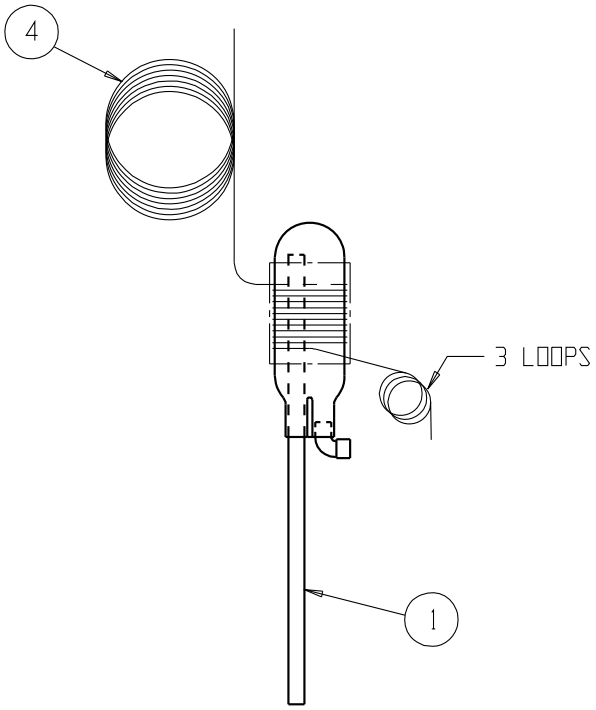


Exploded Drawing
3 cu ft Chest Freezer
Heat Exchanger

8700-201-1-B Rev. 0
Page 1 of 1

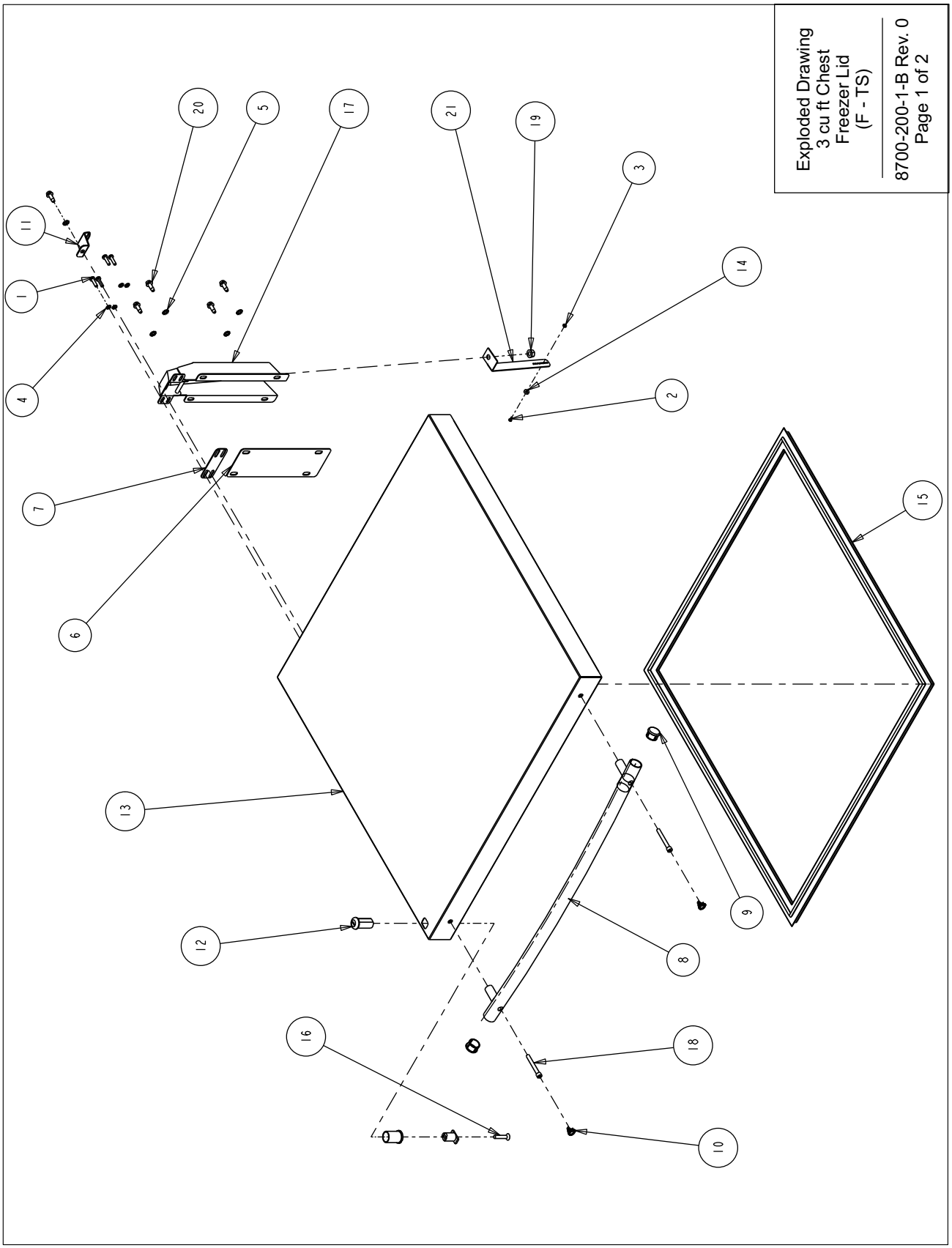
Exploded Drawing
3 cu ft Chest
Freezer Lid
(F - TS)
8700-200-1-B Rev. 0
Page 1 of 2
20
5
17
21
19
3
11
1
14
4
2
7
15
6
13
9
12
8
16
18
10

## BILL OF MATERIALS

| ITEM NO. | PART NO. | PART DESCRIPTION |
|---|---|---|
| 1 | 22057 | #10-32 X 3/4 SS PHP SCREW |
| 2 | 22130 | #4-40 X 1/4 SS PHP SCREW |
| 3 | 23005 | #4-40 SS HEX NUT |
| 4 | 23032 | #10 SS EXT TOOTH LOCKWASHER |
| 5 | 23062 | 1/4 SS EXT TOOTH LOCKWASHER |
| 6 | 52007 | CHEST FREEZER CABINET HINGE SHIM |
| 7 | 52008 | CHEST FREEZER LID HINGE SHIM |
| 8 | 115038 | 646 SID BLUE RADIUSED HANDLE |
| 9 | 180314 | THERMO ULT CHEST HANDLE END CAP |
| 10 | 180315 | ULT CHEST HANDLE SCREW COVER |
| 11 | 189611 | CHEST FREEZER HINGE REINF. BRACKET |
| 12 | 195332 | LOCK MOUNT ASSEMBLY |
| 13 | 195950 | 3.0 CU. FT. CHEST FREEZER LID |
| 14 | 360257 | SWITCH MAGNET |
| 15 | 431148 | 3.0 CU. FT. CHEST FREEZER LID GASKET |
| 16 | 490023 | #1/4-28 X 1-1/4 SS FHP SCREW |
| 17 | 505100 | SPRING-LOADED LID HINGE |
| 18 | 530027 | 1/4-20 X 2L SS HEX SOCKET CAP SCREW |
| 19 | 610118 | 5/16-24 ZP LKWASH HEX NUT |
| 20 | 680005 | 1/4-20 X 3/4" SELF TAPPING SCREW |
| 21 | 1950373-31-1 | CHEST LID MAGNET ANGLE LAYOUT |

Exploded Drawing
3 cu ft Chest
Freezer Lid
(F - TS)

8700-200-1-B Rev. 0
Page 2 of 2

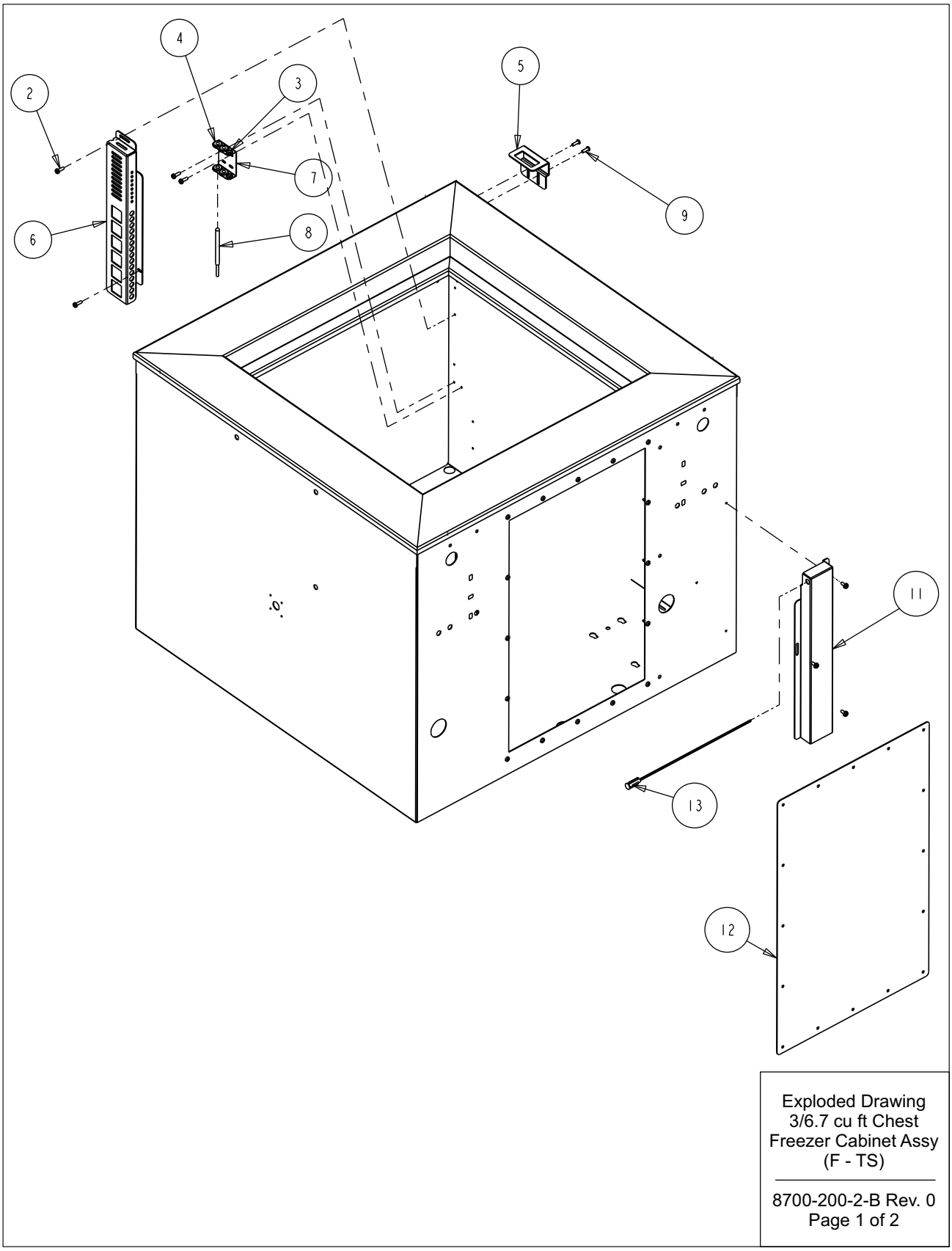


Exploded Drawing
3/6.7 cu ft Chest
Freezer Cabinet Assy
(F - TS)

8700-200-2-B Rev. 0
Page 1 of 2

## BILL OF MATERIALS

| ITEM NO. | PART NO. | PART DESCRIPTION |
|---|---|---|
| 1 | 24030 | #8 X 1/2" TEKS SCREW |
| 2 | 24042 | #8-32 X 1/2 SS PHP SCREW F POINT |
| 3 | 30073 | 5/16" X 3/16" ID GROMMET |
| 4 | 114020 | 5/8" X 1/2" ID GROMMET |
| 5 | 189526 | LID LOCK MOUNT LAYOUT |
| 6 | 195866 | PROBE GUARD |
| 7 | 195867 | PROBE MOUNT |
| 8 | 290176 | CONTROL PROBE |
| 9 | 550022 | #8-32 X 1/2L BUTTON HD TORX SCREW |
| 10 | 590020 | #8-32 X 3/8 SS PHP EXT SEMS SCREW |
| 11 | 1950371 | 3 C.F. CHEST LID SWITCH BRACKET |
| 12 | 195622-34-1 | REAR COVER PLATE |
| 13 | 360230 | MAGNETIC SWITCH |

Exploded Drawing
3/6.7 cu ft Chest
Freezer Cabinet Assy
(F - TS)

8700-200-2-B Rev. 0
Page 2 of 2

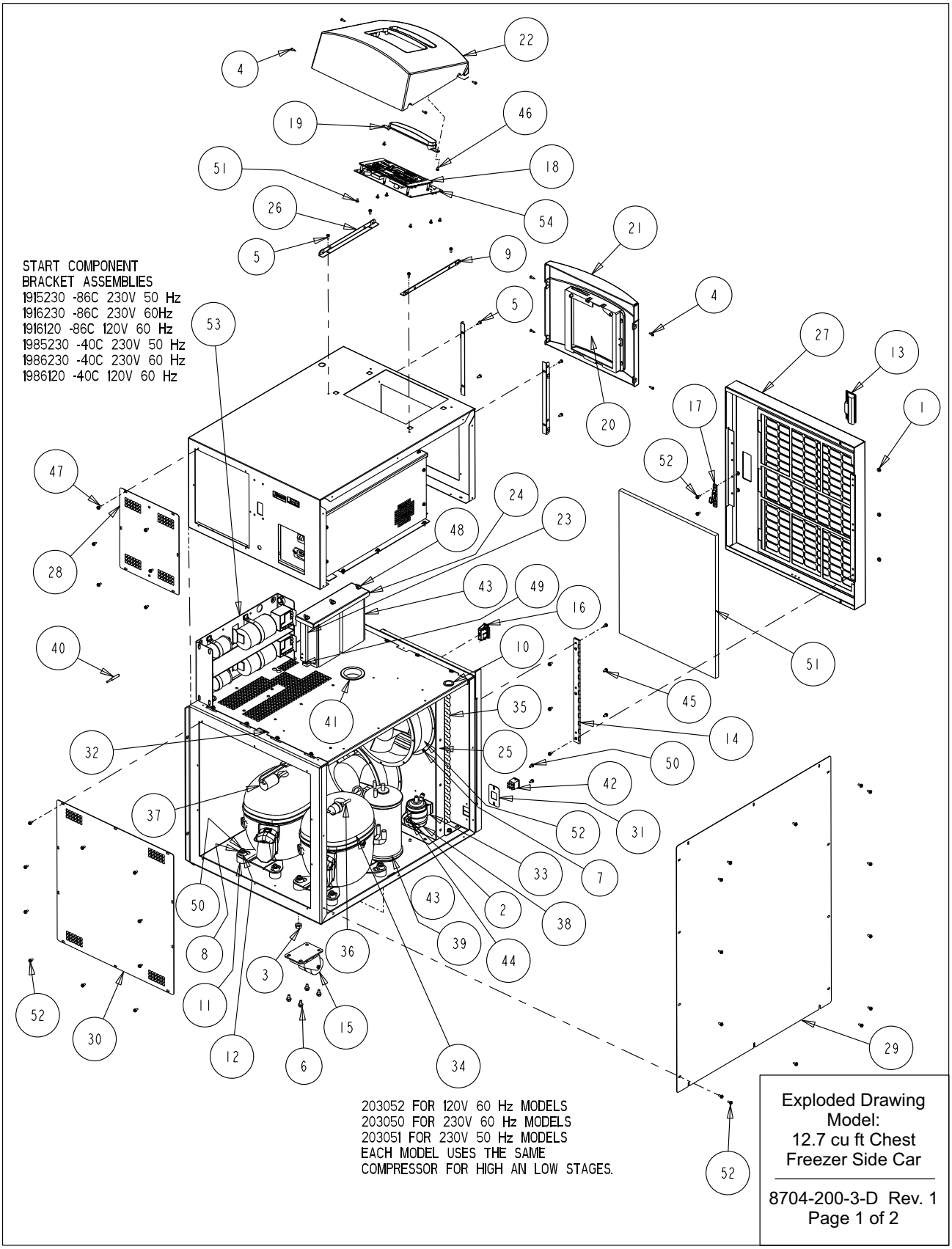


Exploded Drawing
Model:
12.7 cu ft Chest
Freezer Side Car

8704-200-3-D Rev. 1
Page 1 of 2

| REV | ECN NO. | DATE | BY | CAD | APPD | DESCRIPTION OF REVISION |
|---|---|---|---|---|---|---|
| 0 | FR-2202 | 06-15-11 | SKS | SAG | DRP | RELEASED FOR PRODUCTION |
| 1 | FR-2267 | 11-10-11 | JWE | SAG | CCS | COMPRESSOR CHANGE/RELEASE 7 |

## BILL OF MATERIALS

| ITEM NO. | PART NO. | PART DESCRIPTION |
|---|---|---|
| 1 | 23002 | #8-32 ZP LKWASH HEX NUT |
| 2 | 23011 | 1/4-20 ZP LKWASH HEX NUT |
| 3 | 23013 | 3/8-16 ZP LKWASH HEX NUT |
| 4 | 24016 | #6 X 1/2" SS PHP SCREW AB POINT |
| 5 | 24032 | #8-32 X 3/8 SS PHP SCREW F POINT |
| 6 | 24038 | 1/4-20 X 1/2 SELF TAPPING SCREW |
| 7 | 24042 | #8-32 X 1/2 SS PHP SCREW F POINT |
| 8 | 24049 | 1/4 ZP FLAT WASHER |
| 9 | 25040 | #6 U SPEED NUT STL. STL. |
| 10 | 30016 | 1" SNAP BUSHING |
| 11 | 114033 | COMPRESSOR MOUNTING FOOT |
| 12 | 114034 | COMPRESSOR MOUNTING SLEEVE |
| 13 | 115032 | BLACK ABS PLASTIC PULL |
| 14 | 116115 | FRONT PANEL HINGE |
| 15 | 120011 | DUAL WHEEL CASTER |
| 16 | 121071 | LATCH CATCH, PART OF 121071 ASSEMBLY |
| 17 | 121071 | LATCH KEEPER, PART OF 121071 ASSEMBLY |
| 18 | 140367 | CONTROL PANEL ASSEMBLY |
| 19 | 180306 | THERMO BACK-UP SYSTEM BLANK PANEL "SID BLUE" |
| 20 | 180308 | CONTROL CENTER RECORDER BLANK "SID BLU" |
| 21 | 180311 | THERMO SIDE CAR RECORDER BEZEL |
| 22 | 180327 | THERMO CHEST CONTROL CENTER BEZEL |
| 23 | 191385 | FILTER HOLD DOWN ROD |
| 24 | 195768 | BATTERY MOUNT TOP |
| 25 | 195782 | CHEST FREEZER FAN SHROUD |
| 26 | 195783 | CHEST FREEZER CONTROL PANEL MOUNTING ANGLE |
| 27 | 195791 | CHEST FREEZER FRONT PANEL ASSEMBLY |
| 28 | 195806 | CHEST FREEZER REAR ACCESS PANEL |
| 29 | 195807 | CHEST FREEZER SIDE CAR SIDE COVER |
| 30 | 195808 | CHEST FREEZER SIDE CAR REAR PANEL |
| 31 | 195931 | 3.0 & 6.7 CU. FT. BATTERY SWITCH BRACKET |
| 32 | 195949 | CHEST FREEZER SIDE CAR DIVIDER |
| 33 | 200126 | 2" RIGID HANGER |
| 34 | 203050 | H/L STG CHEST COMPRESSOR 230V 60HZ |
| 35 | 204010 | CONDENSER W/DESUPERHEATER |
| 36 | 207008 | PRESSURE SWITCH |
| 37 | 207010 | PRESSURE SWITCH |
| 38 | 209020 | LIQUID LINE FILTER DRYER WITH ACCESS PORT |
| 39 | 214006 | OIL SEPARATOR |
| 40 | 290178 | CONDENSER PROBE |
| 41 | 330039 | 2-1/2" SNAP BUSHING |
| 42 | 360248 | MINI SNAP-IN POWER SWITCH |
| 43 | 400159 | SEALED LEAD ACID BATTERY - 12 VOLT - 7.2 Ah |
| 44 | 550043 | 1/4-20 X 1"L ZP CARRIAGE BOLT |
| 45 | 590020 | #8-32 X 3/8 SS PHP EXT SEMS SCREW |
| 46 | 590027 | #6-32 X 1/4 SS PHP EXT SEMS SCREW |
| 47 | 590029 | #8-32 X 3/8 SS PHP EXT SEMS SCREW W/PATCH |
| 48 | 610009 | 1/4-20 S.S. WING NUT |
| 49 | 610078 | 1/4-20 NUT RETAINER (.025-.063 PANEL) |
| 50 | 680008 | 1/4-20 X 1-3/4 SELF TAPPING SCREW |
| 51 | 760212 | 12, 17 AND 20 CU. FT. CHEST AIR FILTER |
| 52 | 900113 | 10" TUBEAXIAL FAN, 115V |
| 53 | 120230-01- | CHEST FREEZER START COMPONENT BRACKET ASSEMBLY |
| 54 | 191953_ | FREEZER DISPLAY BOARD |

THIS DOCUMENT CONTAINS PROPRIETARY INFORMATION AND SUCH INFORMATION IS NOT TO BE DISCLOSED TO OTHERS FOR ANY PURPOSE NOR USED FOR MANUFACTURING PURPOSE WITHOUT WRITTEN PERMISSION FROM THERMO FISHER SCIENTIFIC

MODEL/PART NAME: -

DWG TITLE: 12.7 CU. FT. CHEST FREEZER SIDE CAR (F-TS)

DWN: MB | CAD: MB | APPD: MH | DATE: 02-19-03 | SCALE: 0.078

MATERIAL: -

PAINT: N/A

TOLERANCE UNLESS OTHERWISE SPECIFIED
ANGLES: DECIMAL: .XX=±
.XXX=±

DRAWING NUMBER: 8704-200-3

SIZE: B

Thermo Fisher SCIENTIFIC
BOX 649, MARIETTA, OHIO 45750

Exploded Drawing
Model:
12.7 cu ft Chest
Freezer Side Car

8704-200-3-D Rev. 1
Page 2 of 2

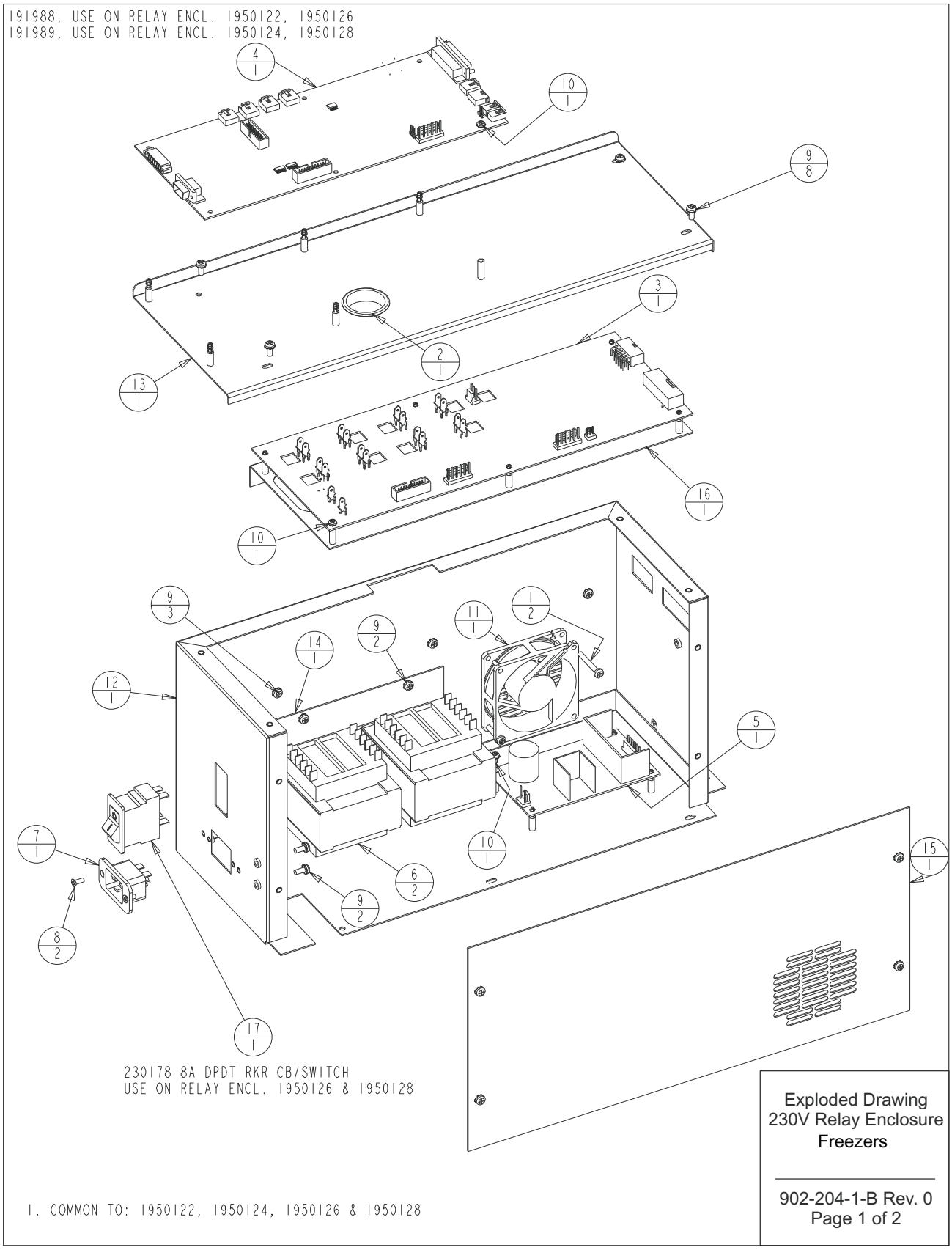


Exploded Drawing
230V Relay Enclosure
Freezers

902-204-1-B Rev. 0
Page 1 of 2

## BILL OF MATERIALS

| ITEM NO. | PART NO. | PART DESCRIPTION |
|---|---|---|
| 1 | 22143 | #8-32 x 1-1/4 SS PHP SCREW |
| 2 | 30077 | 1-1/2" SNAP BUSHING |
| 3 | 191923 | HIGH VOLTAGE BOARD 230V |
| 4 | 191988 | MICRO BOARD ( LOW END) |
| 5 | 400165 | SWITCHER BOARD |
| 6 | 420090 | 175V TRANSFORMER |
| 7 | 460169 | POWER INLET, 16/20A |
| 8 | 490009 | #6-32 X 3/8 SS FHP UC SCREW |
| 9 | 590020 | #8-32 X 3/8 SS PHP EXT SEMS SCREW |
| 10 | 590027 | #6-32 X 1/4 SS PHP EXT SEMS SCREW |
| 11 | 900134 | TUBEAXIAL FAN, 30 CFM, 12V |
| 12 | 195631-16-1 | RELAY ENCLOSURE SPOTWELD SUB-ASSEMBLY |
| 13 | 195631-16-4 | RELAY ENCLOSURE COVER/191656 SUPPORT |
| 14 | 195631-31-3 | TRANSFORMER HOLD DOWN |
| 15 | 195631-31-5 | RELAY ENCLOSURE COVER (MAIN) |
| 16 | 195730-16-1 | 191658 SUPPORT BRACKET SUB-ASSEMBLY |
| 17 | 230184 | 15A DPDT SWITCH/CIRCUIT BKR |

Exploded Drawing
230V Relay Enclosure
Freezers

902-204-1-B Rev. 0
Page 2 of 2

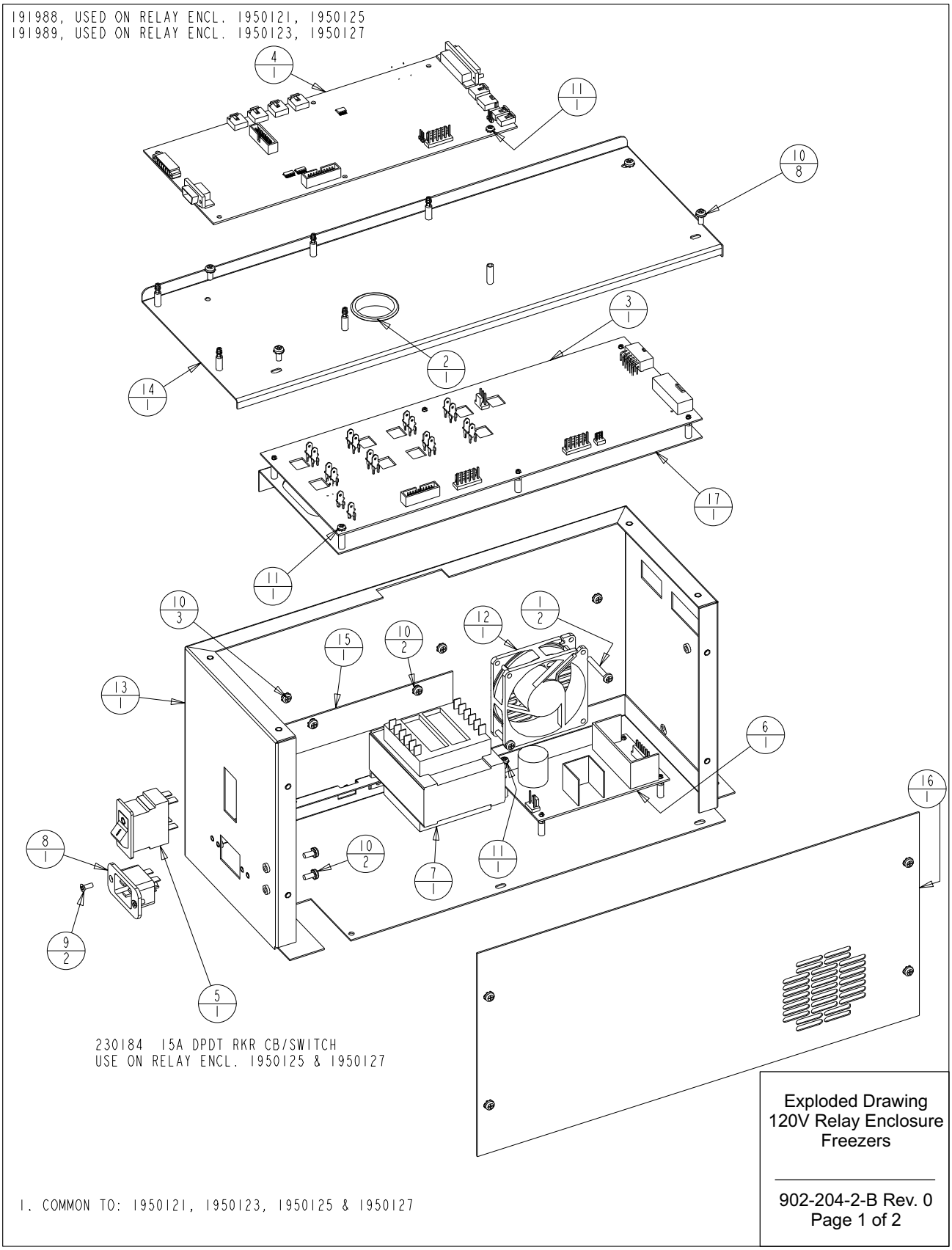


Exploded Drawing
120V Relay Enclosure
Freezers

902-204-2-B Rev. 0
Page 1 of 2

## BILL OF MATERIALS

| ITEM NO. | PART NO. | PART DESCRIPTION |
|---|---|---|
| 1 | 22143 | #8-32 x 1-1/4 SS PHP SCREW |
| 2 | 30077 | 1-1/2" SNAP BUSHING |
| 3 | 191932 | HIGH VOLTAGE BOARD 120V |
| 4 | 191988 | MICRO BOARD ( LOW END) |
| 5 | 230183 | 20A DPDT SWITCH/CIRCUIT BKR |
| 6 | 400165 | SWITCHER BOARD |
| 7 | 420065 | 175V TRANSFORMER |
| 8 | 460169 | POWER INLET, 16/20A |
| 9 | 490009 | #6-32 X 3/8 SS FHP UC SCREW |
| 10 | 590020 | #8-32 X 3/8 SS PHP EXT SEMS SCREW |
| 11 | 590027 | #6-32 X 1/4 SS PHP EXT SEMS SCREW |
| 12 | 900134 | TUBEAXIAL FAN, 30 CFM, 12V |
| 13 | 195631-16-1 | RELAY ENCLOSURE SPOTWELD SUB-ASSEMBLY |
| 14 | 195631-16-4 | RELAY ENCLOSURE COVER/191656 SUPPORT |
| 15 | 195631-31-3 | TRANSFORMER HOLD DOWN |
| 16 | 195631-31-5 | RELAY ENCLOSURE COVER (MAIN) |
| 17 | 195730-16-1 | 191658 SUPPORT BRACKET SUB-ASSEMBLY |

Exploded Drawing
120V Relay Enclosure
Freezers

902-204-2-B Rev. 0
Page 2 of 2

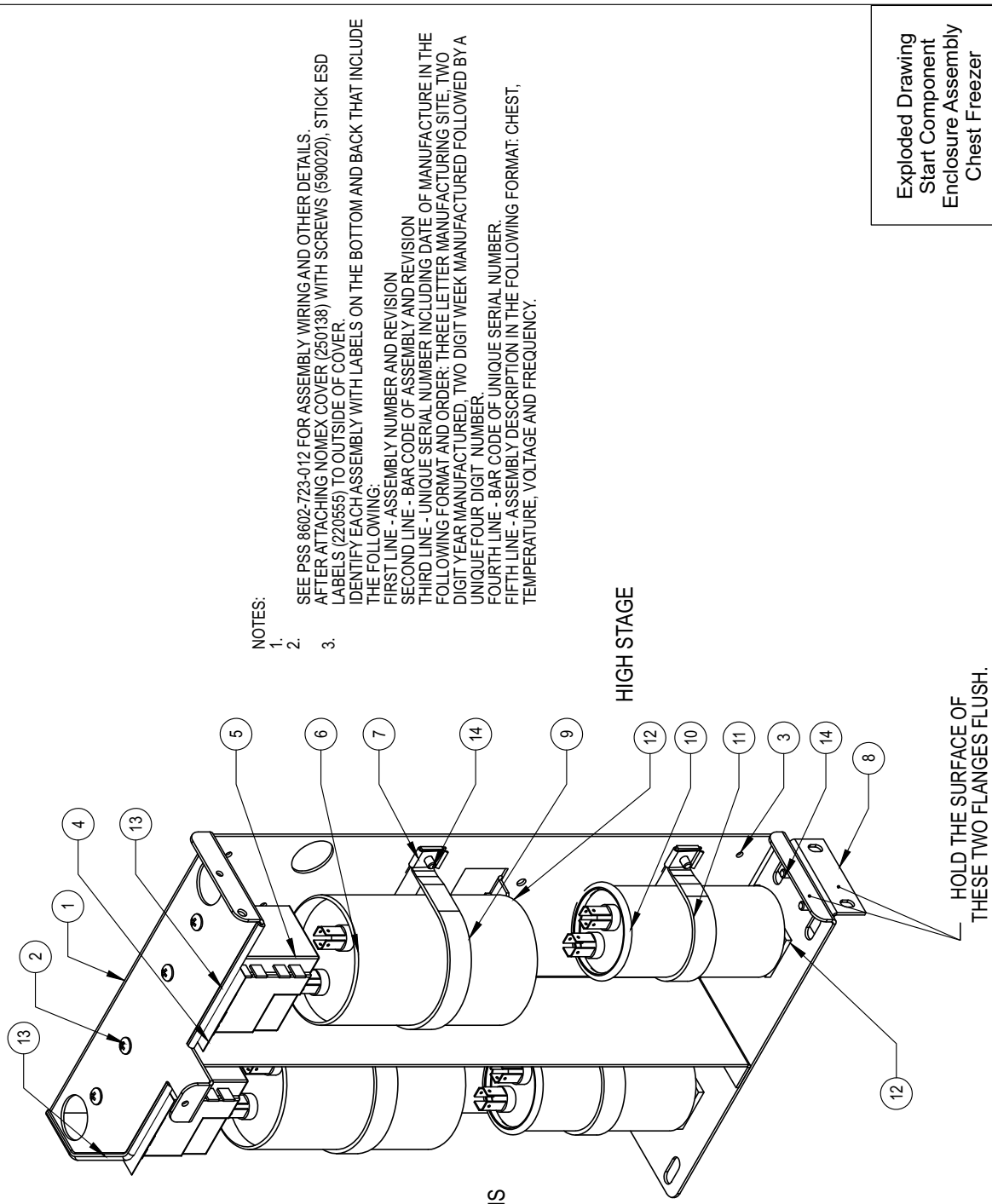
NOTES:
1. SEE PSS 8602-723-012 FOR ASSEMBLY WIRING AND OTHER DETAILS.
2. AFTER ATTACHING NOMEX COVER (250138) WITH SCREWS (590020), STICK ESD LABELS (220555) TO OUTSIDE OF COVER.
3. IDENTIFY EACH ASSEMBLY WITH LABELS ON THE BOTTOM AND BACK THAT INCLUDE THE FOLLOWING:
FIRST LINE - ASSEMBLY NUMBER AND REVISION
SECOND LINE - BAR CODE OF ASSEMBLY AND REVISION
THIRD LINE - UNIQUE SERIAL NUMBER INCLUDING DATE OF MANUFACTURE IN THE FOLLOWING FORMAT AND ORDER: THREE LETTER MANUFACTURING SITE, TWO DIGIT YEAR MANUFACTURED, TWO DIGIT WEEK MANUFACTURED FOLLOWED BY A UNIQUE FOUR DIGIT NUMBER.
FOURTH LINE - BAR CODE OF UNIQUE SERIAL NUMBER.
FIFTH LINE - ASSEMBLY DESCRIPTION IN THE FOLLOWING FORMAT: CHEST, TEMPERATURE, VOLTAGE AND FREQUENCY.
HIGH STAGE
LOW STAGE
USE THIS SIDE FOR
-40C CONFIGURATIONS
HOLD THE SURFACE OF
THESE TWO FLANGES FLUSH.
CHEST FREEZER START COMPONENT BRACKET ASSEMBLIES
Exploded Drawing
Start Component
Enclosure Assembly
Chest Freezer
120230-01-1-B Rev. 4
Page 1 of 2

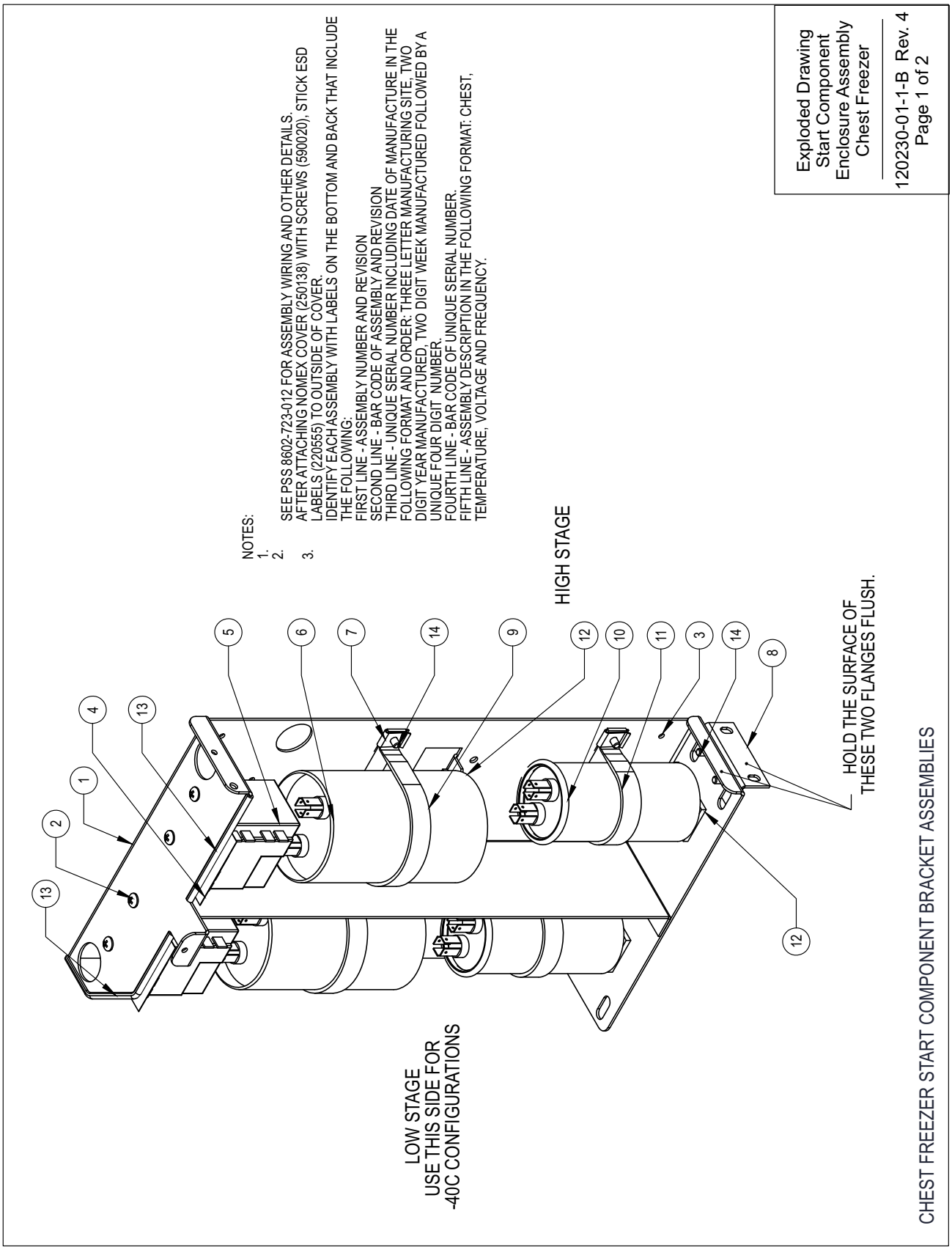
NOTES:
1. SEE PSS 8602-723-012 FOR ASSEMBLY WIRING AND OTHER DETAILS.
2. AFTER ATTACHING NOMEX COVER (250138) WITH SCREWS (590020), STICK ESD LABELS (220555) TO OUTSIDE OF COVER.
3. IDENTIFY EACH ASSEMBLY WITH LABELS ON THE BOTTOM AND BACK THAT INCLUDE THE FOLLOWING:
FIRST LINE - ASSEMBLY NUMBER AND REVISION
SECOND LINE - BAR CODE OF ASSEMBLY AND REVISION
THIRD LINE - UNIQUE SERIAL NUMBER INCLUDING DATE OF MANUFACTURE IN THE FOLLOWING FORMAT AND ORDER: THREE LETTER MANUFACTURING SITE, TWO DIGIT YEAR MANUFACTURED, TWO DIGIT WEEK MANUFACTURED FOLLOWED BY A UNIQUE FOUR DIGIT NUMBER.
FOURTH LINE - BAR CODE OF UNIQUE SERIAL NUMBER.
FIFTH LINE - ASSEMBLY DESCRIPTION IN THE FOLLOWING FORMAT: CHEST, TEMPERATURE, VOLTAGE AND FREQUENCY.
HIGH STAGE
HOLD THE SURFACE OF THESE TWO FLANGES FLUSH.
LOW STAGE USE THIS SIDE FOR -40C CONFIGURATIONS
CHEST FREEZER START COMPONENT BRACKET ASSEMBLIES
Exploded Drawing Start Component Enclosure Assembly Chest Freezer
120230-01-1-B Rev. 4
Page 1 of 2

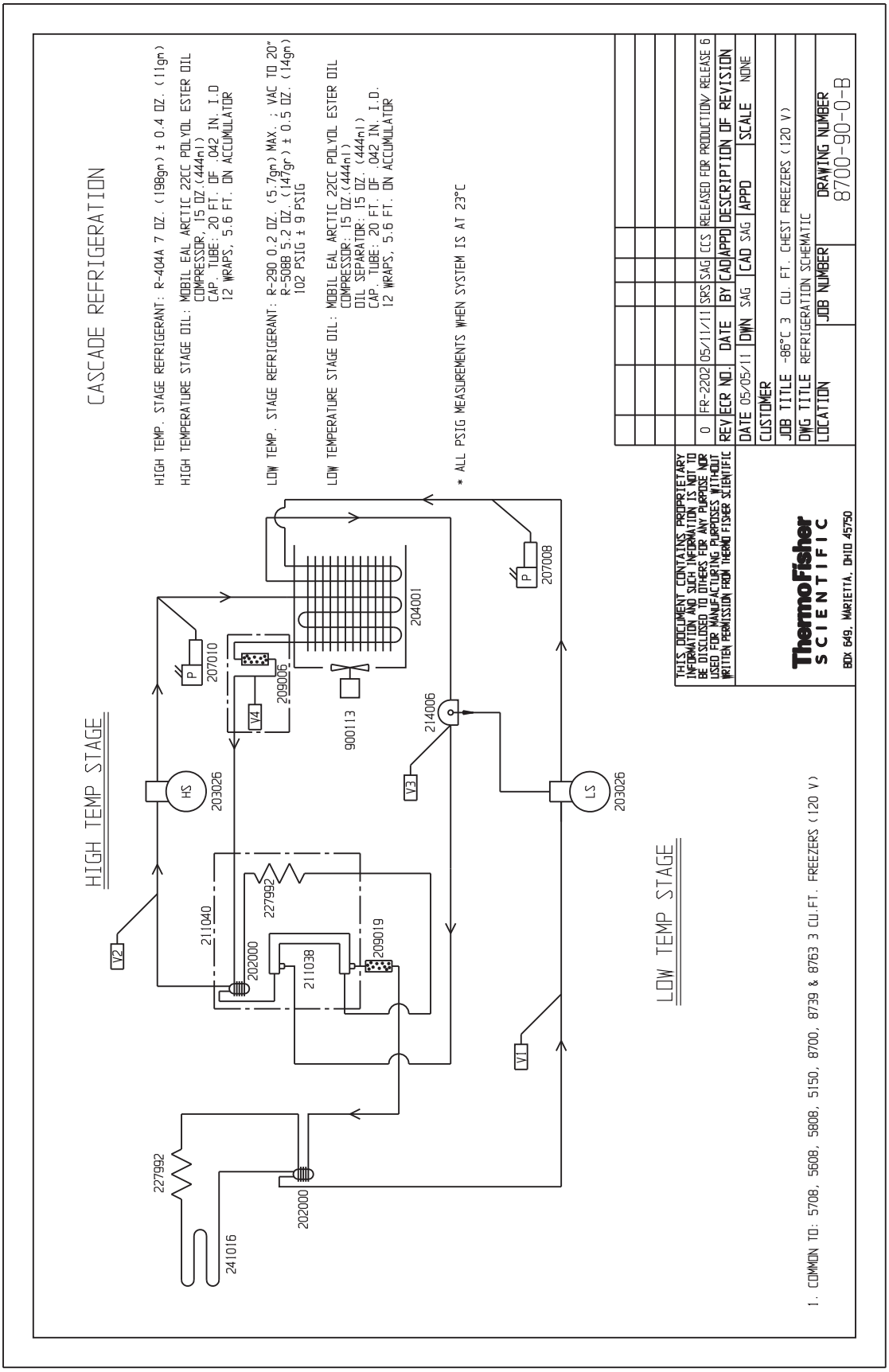
CASCADE REFRIGERATION
HIGH TEMP. STAGE REFRIGERANT: R-404A 7 OZ. (198gn) ± 0.4 OZ. (11gn)
HIGH TEMPERATURE STAGE OIL: MOBIL EAL ARCTIC 22CC POLYOL ESTER OIL
COMPRESSOR, 15 OZ.(444ml)
CAP. TUBE: 20 FT. OF .042 IN. I.D
12 WRAPS, 5.6 FT. ON ACCUMULATOR
LOW TEMP. STAGE REFRIGERANT: R-290 0.2 OZ. (5.7gn) MAX. ; VAC TO 20"
R-508B 5.2 OZ. (147gr) ± 0.5 OZ. (14gn)
102 PSIG ± 9 PSIG
LOW TEMPERATURE STAGE OIL: MOBIL EAL ARCTIC 22CC POLYOL ESTER OIL
COMPRESSOR: 15 OZ.(444ml)
OIL SEPARATOR: 15 OZ. (444ml)
CAP. TUBE: 20 FT. OF .042 IN. I.D.
12 WRAPS, 5.6 FT. ON ACCUMULATOR
* ALL PSIG MEASUREMENTS WHEN SYSTEM IS AT 23°C
HIGH TEMP STAGE
LOW TEMP STAGE
HS
203026
LS
203026
P
207010
P
207008
V1
V2
V3
V4
209006
204001
900113
214006
211040
227992
202000
211038
209019
227992
202000
241016
THIS DOCUMENT CONTAINS PROPRIETARY INFORMATION AND SUCH INFORMATION IS NOT TO BE DISCLOSED TO OTHERS FOR ANY PURPOSE NOR USED FOR MANUFACTURING PURPOSES WITHOUT WRITTEN PERMISSION FROM THERMO FISHER SCIENTIFIC
REV ECR NO. DATE BY CAD APPD DESCRIPTION OF REVISION
0 FR-2202 05/11/11 SRS SAG CES RELEASED FOR PRODUCTION/ RELEASE 6
DATE 05/05/11 DWN SAG CAD SAG APPD SCALE NONE
CUSTOMER
JOB TITLE -86°C 3 CU. FT. CHEST FREEZERS (120 V)
DWG TITLE REFRIGERATION SCHEMATIC
LOCATION JOB NUMBER DRAWING NUMBER
8700-90-0-B
ThermoFisher SCIENTIFIC
BOX 649, MARIETTA, OHIO 45750
1. COMMON TO: 5708, 5608, 5808, 5150, 8700, 8739 & 8763 3 CU.FT. FREEZERS (120 V)

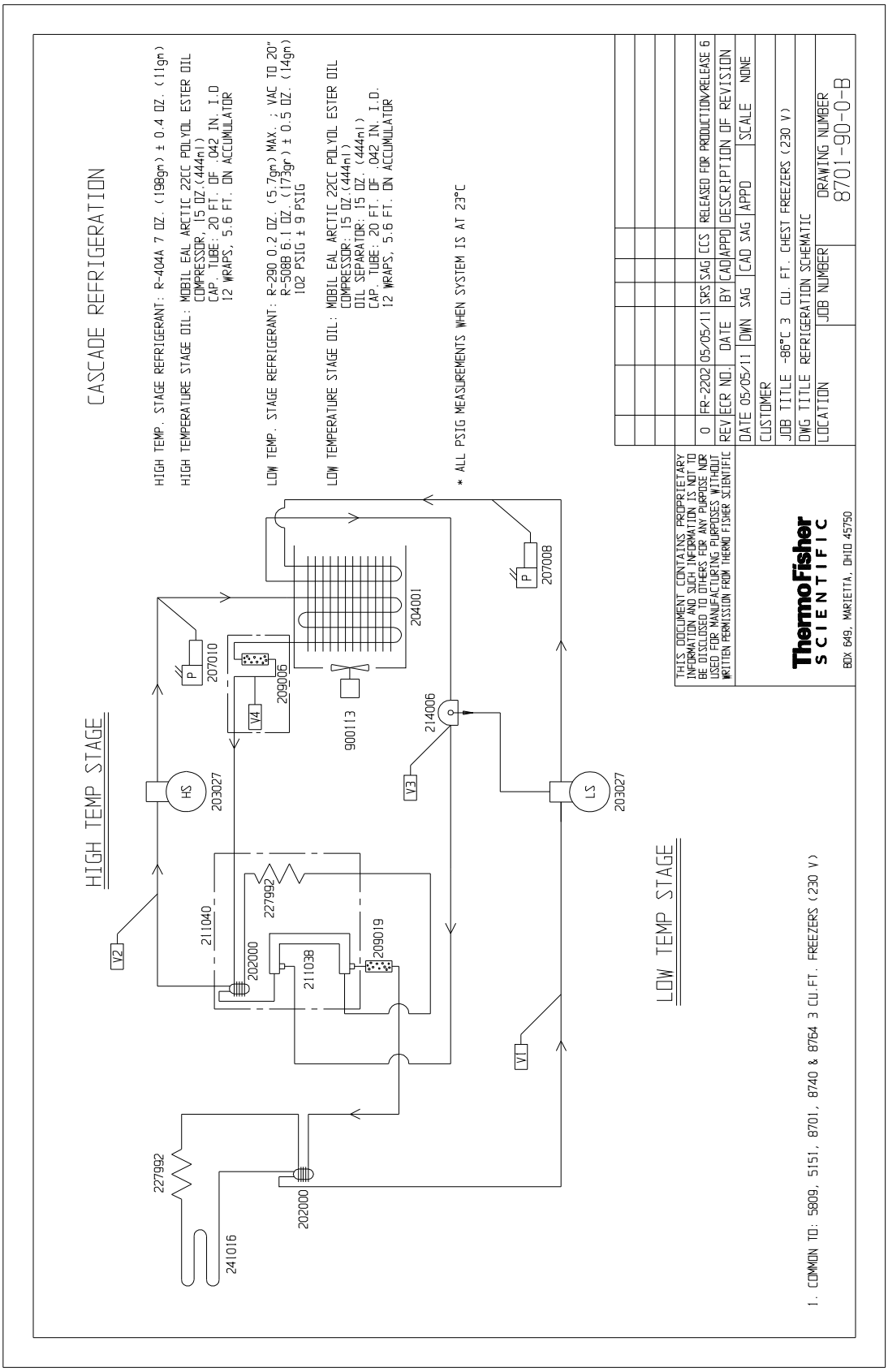
CASCADE REFRIGERATION
HIGH TEMP. STAGE REFRIGERANT: R-404A 7 OZ. (198gm) ± 0.4 OZ. (11gm)
HIGH TEMPERATURE STAGE OIL: MOBIL EAL ARCTIC 22CC POLYOL ESTER OIL
COMPRESSOR, 15 OZ.(444ml)
CAP. TUBE: 20 FT. OF .042 IN. I.D
12 WRAPS, 5.6 FT. ON ACCUMULATOR
LOW TEMP. STAGE REFRIGERANT: R-290 0.2 OZ. (5.7gm) MAX. ; VAC TO 20"
R-508B 6.1 OZ. (173gr) ± 0.5 OZ. (14gm)
102 PSIG ± 9 PSIG
LOW TEMPERATURE STAGE OIL: MOBIL EAL ARCTIC 22CC POLYOL ESTER OIL
COMPRESSOR: 15 OZ.(444ml)
OIL SEPARATOR: 15 OZ. (444ml)
CAP. TUBE: 20 FT. OF .042 IN. I.D.
12 WRAPS, 5.6 FT. ON ACCUMULATOR
* ALL PSIG MEASUREMENTS WHEN SYSTEM IS AT 23°C
HIGH TEMP STAGE
LOW TEMP STAGE
HS
LS
P
V1
V2
V3
V4
203027
207010
209006
204001
900113
214006
207008
211040
227992
202000
211038
209019
241016
THIS DOCUMENT CONTAINS PROPRIETARY INFORMATION AND SUCH INFORMATION IS NOT TO BE DISCLOSED TO OTHERS FOR ANY PURPOSE NOR USED FOR MANUFACTURING PURPOSES WITHOUT WRITTEN PERMISSION FROM THERMO FISHER SCIENTIFIC
REV ECR NO. DATE BY CAD APPD DESCRIPTION OF REVISION
0 FR-2202 05/05/11 SRS SAG CCS RELEASED FOR PRODUCTION-RELEASE 6
DATE 05/05/11 DWN SAG CAD SAG APPD SCALE NONE
CUSTOMER
JOB TITLE -86°C 3 CU. FT. CHEST FREEZERS (230 V)
DWG TITLE REFRIGERATION SCHEMATIC
LOCATION JOB NUMBER DRAWING NUMBER
8701-90-0-B
ThermoFisher SCIENTIFIC
BOX 649, MARIETTA, OHIO 45750
1. COMMON TO: 5809, 5151, 8701, 8740 & 8764 3 CU.FT. FREEZERS (230 V)

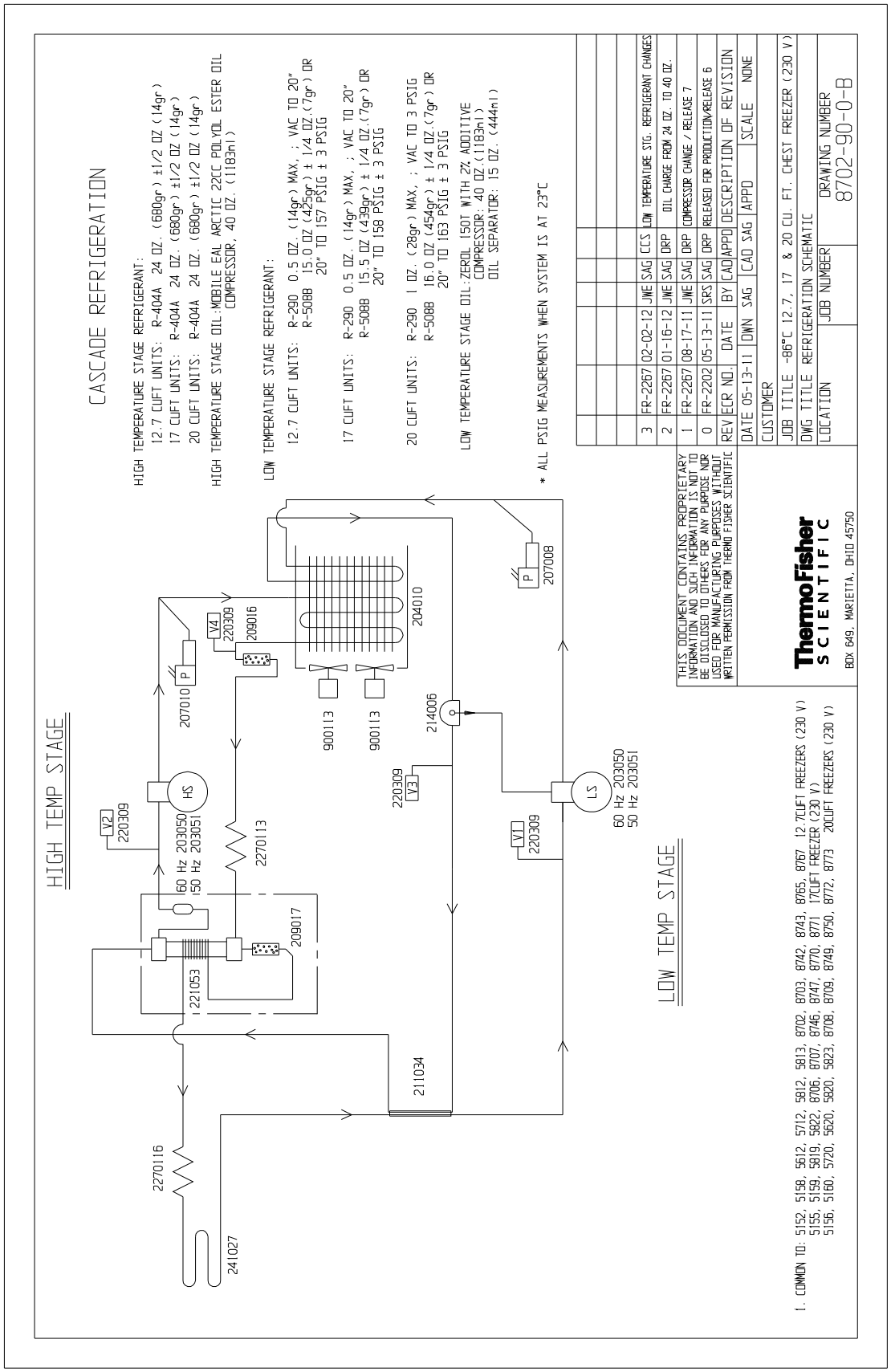
CASCADE REFRIGERATION
HIGH TEMPERATURE STAGE REFRIGERANT:
12.7 CUFT UNITS: R-404A 24 OZ. (680gr) ±1/2 OZ (14gr)
17 CUFT UNITS: R-404A 24 OZ. (680gr) ±1/2 OZ (14gr)
20 CUFT UNITS: R-404A 24 OZ. (680gr) ±1/2 OZ (14gr)
HIGH TEMPERATURE STAGE OIL:MOBILE EAL ARCTIC 22CC POLYOL ESTER OIL
COMPRESSOR, 40 OZ. (1183ml)
LOW TEMPERATURE STAGE REFRIGERANT:
12.7 CUFT UNITS: R-290 0.5 OZ. (14gr) MAX, ; VAC TO 20"
R-508B 15.0 OZ (425gr) ± 1/4 OZ.(7gr) OR
20" TO 157 PSIG ± 3 PSIG
17 CUFT UNITS: R-290 0.5 OZ. (14gr) MAX, ; VAC TO 20"
R-508B 15.5 OZ (439gr) ± 1/4 OZ.(7gr) OR
20" TO 158 PSIG ± 3 PSIG
20 CUFT UNITS: R-290 1 OZ. (28gr) MAX, ; VAC TO 3 PSIG
R-508B 16.0 OZ (454gr) ± 1/4 OZ.(7gr) OR
20" TO 163 PSIG ± 3 PSIG
LOW TEMPERATURE STAGE OIL:ZEROL 150T WITH 2% ADDITIVE
COMPRESSOR: 40 OZ.(1183ml)
OIL SEPARATOR: 15 OZ. (444ml)
* ALL PSIG MEASUREMENTS WHEN SYSTEM IS AT 23°C
HIGH TEMP STAGE
LOW TEMP STAGE
HS
LS
60 Hz 203050
50 Hz 203051
V1
V2
V3
V4
220309
207010
207008
209016
209017
204010
214006
221053
211034
2270113
2270116
241027
900113
900113
1. COMMON TO: 5152, 5158, 5612, 5712, 5812, 5813, 8702, 8703, 8742, 8743, 8765, 8767 12.7CUFT FREEZERS (230 V)
5155, 5159, 5819, 5822, 8706, 8707, 8746, 8747, 8770, 8771 17CUFT FREEZER (230 V)
5156, 5160, 5720, 5620, 5820, 5823, 8708, 8709, 8749, 8750, 8772, 8773 20CUFT FREEZERS (230 V)
THIS DOCUMENT CONTAINS PROPRIETARY INFORMATION AND SUCH INFORMATION IS NOT TO BE DISCLOSED TO OTHERS FOR ANY PURPOSE NOR USED FOR MANUFACTURING PURPOSES WITHOUT WRITTEN PERMISSION FROM THERMO FISHER SCIENTIFIC
ThermoFisher SCIENTIFIC
BOX 649, MARIETTA, OHIO 45750
3 FR-2267 02-02-12 JWE SAG CCS LOW TEMPERATURE STG. REFRIGERANT CHANGES
2 FR-2267 01-16-12 JWE SAG DRP OIL CHARGE FROM 24 OZ. TO 40 OZ.
1 FR-2267 08-17-11 JWE SAG DRP COMPRESSOR CHANGE / RELEASE 7
0 FR-2202 05-13-11 SRS SAG DRP RELEASED FOR PRODUCTION/RELEASE 6
REV ECR NO. DATE BY CAD APPD DESCRIPTION OF REVISION
DATE 05-13-11 DWN SAG CAD SAG APPD SCALE NONE
CUSTOMER
JOB TITLE -86°C 12.7, 17 & 20 CU. FT. CHEST FREEZER (230 V)
DWG TITLE REFRIGERATION SCHEMATIC
LOCATION JOB NUMBER DRAWING NUMBER
8702-90-0-B

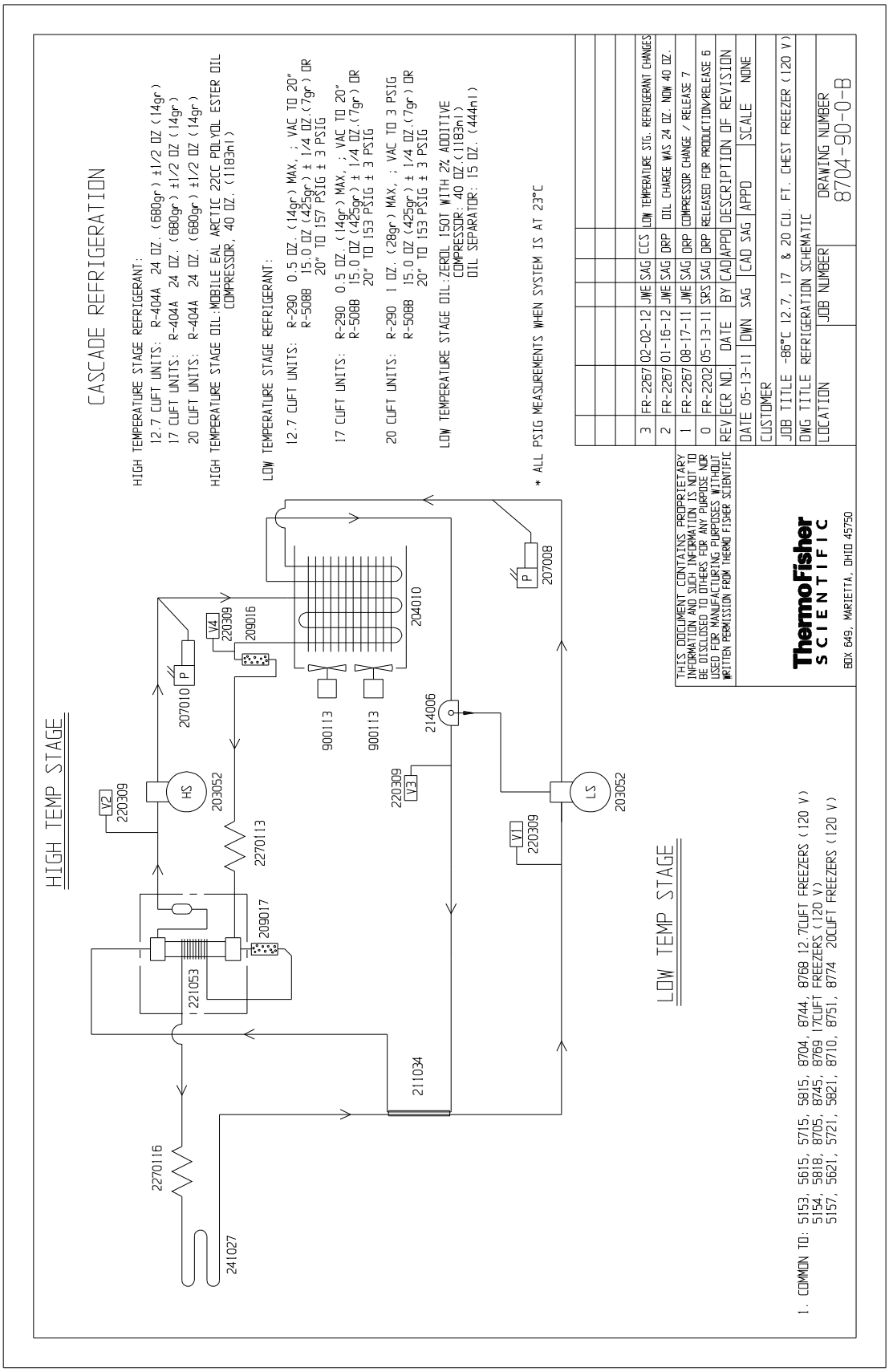
CASCADE REFRIGERATION
HIGH TEMPERATURE STAGE REFRIGERANT:
12.7 CUFT UNITS: R-404A 24 OZ. (680gr) ±1/2 OZ (14gr)
17 CUFT UNITS: R-404A 24 OZ. (680gr) ±1/2 OZ (14gr)
20 CUFT UNITS: R-404A 24 OZ. (680gr) ±1/2 OZ (14gr)
HIGH TEMPERATURE STAGE OIL: MOBILE EAL ARCTIC 22CC POLYOL ESTER OIL COMPRESSOR, 40 OZ. (1183ml)
LOW TEMPERATURE STAGE REFRIGERANT:
12.7 CUFT UNITS: R-290 0.5 OZ. (14gr) MAX, ; VAC TO 20" R-508B 15.0 OZ (425gr) ± 1/4 OZ.(7gr) OR 20" TO 157 PSIG ± 3 PSIG
17 CUFT UNITS: R-290 0.5 OZ. (14gr) MAX, ; VAC TO 20" R-508B 15.0 OZ (425gr) ± 1/4 OZ.(7gr) OR 20" TO 153 PSIG ± 3 PSIG
20 CUFT UNITS: R-290 1 OZ. (28gr) MAX, ; VAC TO 3 PSIG R-508B 15.0 OZ (425gr) ± 1/4 OZ.(7gr) OR 20" TO 153 PSIG ± 3 PSIG
LOW TEMPERATURE STAGE OIL: ZEROL 150T WITH 2% ADDITIVE COMPRESSOR: 40 OZ.(1183ml) OIL SEPARATOR: 15 OZ. (444ml)
* ALL PSIG MEASUREMENTS WHEN SYSTEM IS AT 23°C
HIGH TEMP STAGE
LOW TEMP STAGE
V2 220309
HS 203052
V4 220309
209016
207010
P
204010
900113
900113
214006
220309 V3
V1 220309
LS 203052
207008
P
2270113
209017
221053
211034
2270116
241027
THIS DOCUMENT CONTAINS PROPRIETARY INFORMATION AND SUCH INFORMATION IS NOT TO BE DISCLOSED TO OTHERS FOR ANY PURPOSE NOR USED FOR MANUFACTURING PURPOSES WITHOUT WRITTEN PERMISSION FROM THERMO FISHER SCIENTIFIC
ThermoFisher SCIENTIFIC
BOX 649, MARIETTA, OHIO 45750
3 FR-2267 02-02-12 JWE SAG CCS LOW TEMPERATURE STG. REFRIGERANT CHANGES
2 FR-2267 01-16-12 JWE SAG DRP OIL CHARGE WAS 24 OZ. NOW 40 OZ.
1 FR-2267 08-17-11 JWE SAG DRP COMPRESSOR CHANGE / RELEASE 7
0 FR-2202 05-13-11 SRS SAG DRP RELEASED FOR PRODUCTION/RELEASE 6
REV ECR NO. DATE BY CAD APPD DESCRIPTION OF REVISION
DATE 05-13-11 DWN SAG CAD SAG APPD SCALE NONE
CUSTOMER
JOB TITLE -86°C 12.7, 17 & 20 CU. FT. CHEST FREEZER (120 V)
DWG TITLE REFRIGERATION SCHEMATIC
LOCATION JOB NUMBER DRAWING NUMBER 8704-90-0-B
1. COMMON TO: 5153, 5615, 5715, 5815, 8704, 8744, 8768 12.7CUFT FREEZERS (120 V)
5154, 5818, 8705, 8745, 8769 17CUFT FREEZERS (120 V)
5157, 5621, 5721, 5821, 8710, 8751, 8774 20CUFT FREEZERS (120 V)

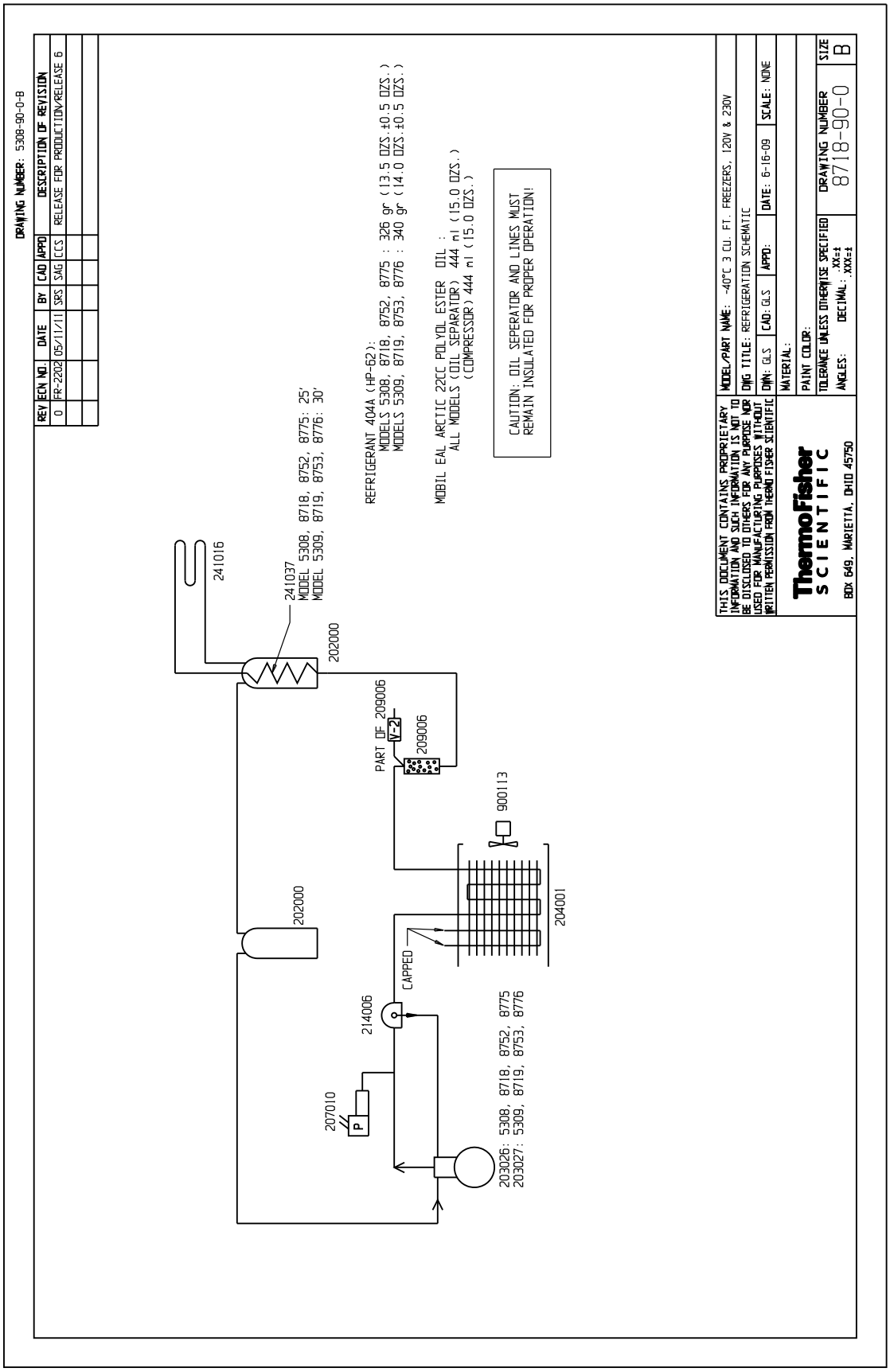
DRAWING NUMBER: 5308-90-0-B
REV ECN NO. DATE BY CAD APPD DESCRIPTION OF REVISION
0 FR-2202 05/11/11 SRS SAG CCS RELEASE FOR PRODUCTION-RELEASE 6
241016
241037
MODEL 5308, 8718, 8752, 8775: 25'
MODEL 5309, 8719, 8753, 8776: 30'
202000
REFRIGERANT 404A (HP-62):
MODELS 5308, 8718, 8752, 8775 : 326 gr (13.5 OZS.±0.5 OZS.)
MODELS 5309, 8719, 8753, 8776 : 340 gr (14.0 OZS.±0.5 OZS.)
MOBIL EAL ARCTIC 22CC POLYOL ESTER OIL :
ALL MODELS (OIL SEPARATOR) 444 ml (15.0 OZS.)
(COMPRESSOR) 444 ml (15.0 OZS.)
CAUTION: OIL SEPERATOR AND LINES MUST
REMAIN INSULATED FOR PROPER OPERATION!
PART OF 209006
V-2
209006
900113
204001
202000
CAPPED
214006
207010
P
203026: 5308, 8718, 8752, 8775
203027: 5309, 8719, 8753, 8776
THIS DOCUMENT CONTAINS PROPRIETARY INFORMATION AND SUCH INFORMATION IS NOT TO BE DISCLOSED TO OTHERS FOR ANY PURPOSE NOR USED FOR MANUFACTURING PURPOSES WITHOUT WRITTEN PERMISSION FROM THERMO FISHER SCIENTIFIC
MODEL/PART NAME: -40°C 3 CU. FT. FREEZERS, 120V & 230V
DWG TITLE: REFRIGERATION SCHEMATIC
DWN: GLS CAD: GLS APPD: DATE: 6-16-09 SCALE: NONE
MATERIAL:
PAINT COLOR:
TOLERANCE UNLESS OTHERWISE SPECIFIED
ANGLES: DECIMAL: .XX±
.XXX±
ThermoFisher
SCIENTIFIC
BOX 649, MARIETTA, OHIO 45750
DRAWING NUMBER
8718-90-0
SIZE
B

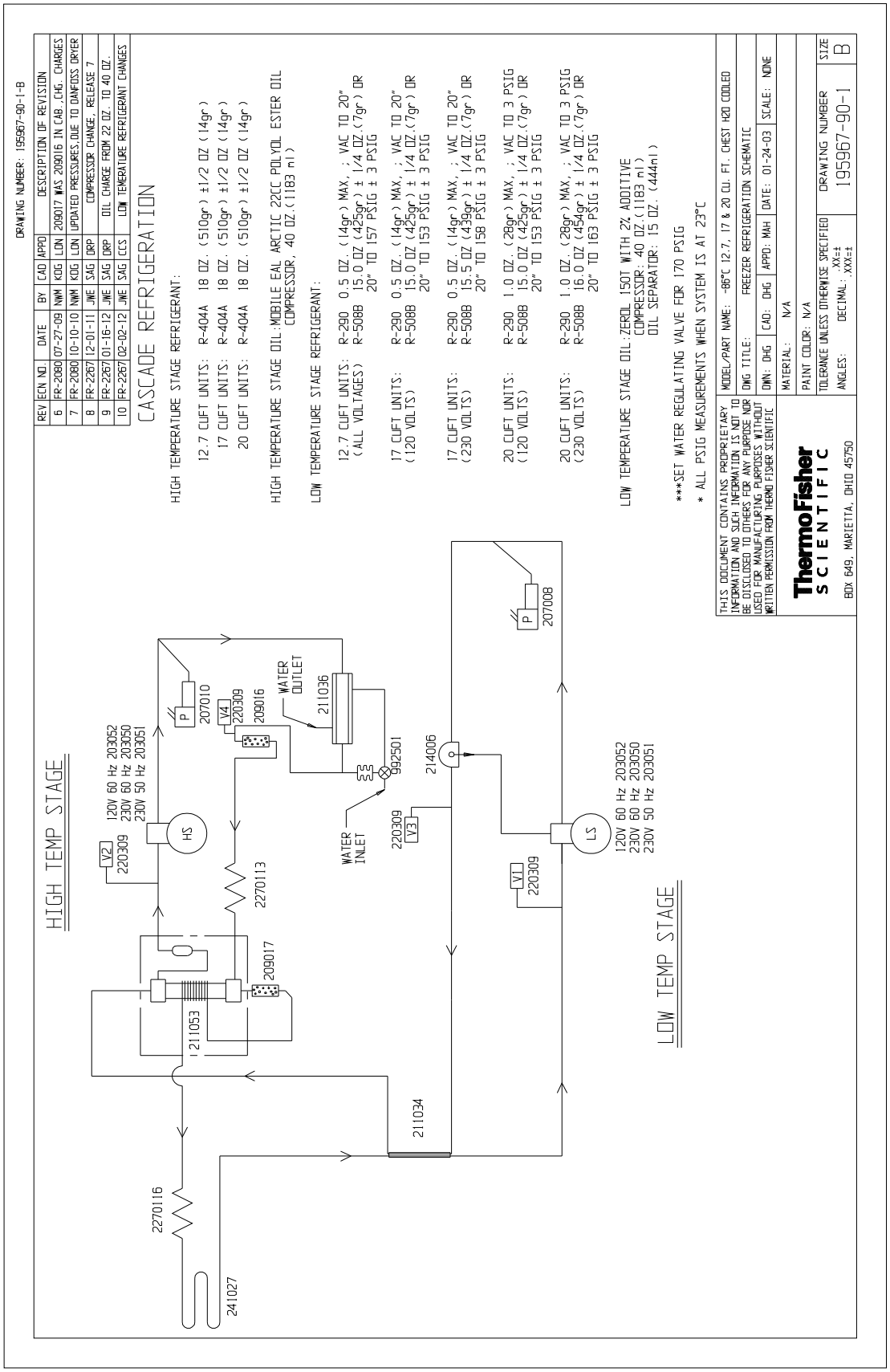
DRAWING NUMBER: 195967-90-1-B
REV ECN NO. DATE BY CAD APPD DESCRIPTION OF REVISION
6 FR-2080 07-27-09 NWM KDG LDN 209017 WAS 209016 IN CAB.,CHG. CHARGES
7 FR-2080 10-10-10 NWM KDG LDN UPDATED PRESSURES DUE TO DANFOSS DRYER
8 FR-2267 12-01-11 JWE SAG DRP COMPRESSOR CHANGE, RELEASE 7
9 FR-2267 01-16-12 JWE SAG DRP OIL CHARGE FROM 22 OZ. TO 40 OZ.
10 FR-2267 02-02-12 JWE SAG CCS LOW TEMERATURE REFRIGERANT CHANGES
CASCADE REFRIGERATION
HIGH TEMPERATURE STAGE REFRIGERANT:
12.7 CUFT UNITS: R-404A 18 OZ. (510gr) ±1/2 OZ (14gr)
17 CUFT UNITS: R-404A 18 OZ. (510gr) ±1/2 OZ (14gr)
20 CUFT UNITS: R-404A 18 OZ. (510gr) ±1/2 OZ (14gr)
HIGH TEMPERATURE STAGE OIL: MOBILE EAL ARCTIC 22CC POLYOL ESTER OIL
COMPRESSOR, 40 OZ.(1183 ml)
LOW TEMPERATURE STAGE REFRIGERANT:
12.7 CUFT UNITS: R-290 0.5 OZ. (14gr) MAX. ; VAC TO 20"
(ALL VOLTAGES) R-508B 15.0 OZ (425gr) ± 1/4 OZ (7gr) OR
20" TO 157 PSIG ± 3 PSIG
17 CUFT UNITS: R-290 0.5 OZ. (14gr) MAX. ; VAC TO 20"
(120 VOLTS) R-508B 15.0 OZ (425gr) ± 1/4 OZ.(7gr) OR
20" TO 153 PSIG ± 3 PSIG
17 CUFT UNITS: R-290 0.5 OZ. (14gr) MAX. ; VAC TO 20"
(230 VOLTS) R-508B 15.5 OZ (439gr) ± 1/4 OZ (7gr) OR
20" TO 158 PSIG ± 3 PSIG
20 CUFT UNITS: R-290 1.0 OZ. (28gr) MAX. ; VAC TO 3 PSIG
(120 VOLTS) R-508B 15.0 OZ (425gr) ± 1/4 OZ (7gr) OR
20" TO 153 PSIG ± 3 PSIG
20 CUFT UNITS: R-290 1.0 OZ. (28gr) MAX. ; VAC TO 3 PSIG
(230 VOLTS) R-508B 16.0 OZ (454gr) ± 1/4 OZ (7gr) OR
20" TO 163 PSIG ± 3 PSIG
LOW TEMPERATURE STAGE OIL: ZEROL 150T WITH 2% ADDITIVE
COMPRESSOR: 40 OZ (1183 ml)
OIL SEPARATOR: 15 OZ. (444ml)
***SET WATER REGULATING VALVE FOR 170 PSIG
* ALL PSIG MEASUREMENTS WHEN SYSTEM IS AT 23°C
THIS DOCUMENT CONTAINS PROPRIETARY INFORMATION AND SUCH INFORMATION IS NOT TO BE DISCLOSED TO OTHERS FOR ANY PURPOSE NOR USED FOR MANUFACTURING PURPOSES WITHOUT WRITTEN PERMISSION FROM THERMO FISHER SCIENTIFIC
MODEL/PART NAME: -86°C 12.7, 17 & 20 CU. FT. CHEST H2O COOLED
DWG TITLE: FREEZER REFRIGERATION SCHEMATIC
DWN: DHG CAD: DHG APPD: MAH DATE: 01-24-03 SCALE: NONE
MATERIAL: N/A
PAINT COLOR: N/A
TOLERANCE UNLESS OTHERWISE SPECIFIED .XX=± .XXX=±
ANGLES: DECIMAL:
DRAWING NUMBER 195967-90-1
SIZE B
ThermoFisher SCIENTIFIC
BOX 649, MARIETTA, OHIO 45750
HIGH TEMP STAGE
LOW TEMP STAGE
HS
LS
P
V1 220309
V2 220309
V3 220309
V4 220309
120V 60 Hz 203052
230V 60 Hz 203050
230V 50 Hz 203051
207010
209016
WATER OUTLET
211036
992501
WATER INLET
214006
207008
209017
211053
2270113
211034
2270116
241027

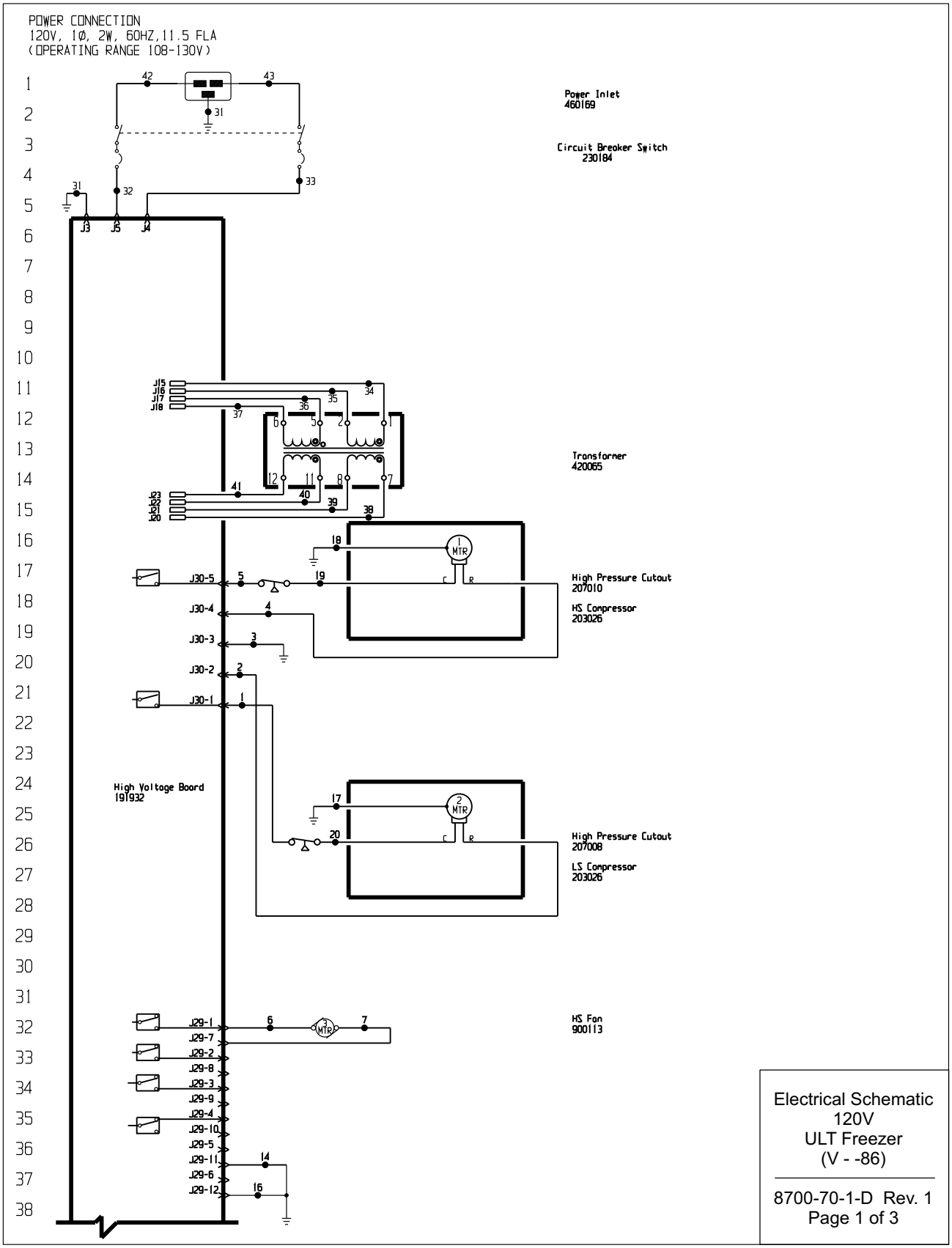
POWER CONNECTION
120V, 1Ø, 2W, 60HZ,11.5 FLA
(OPERATING RANGE 108-130V)
Power Inlet
460169
Circuit Breaker Switch
230184
Transformer
420065
High Pressure Cutout
207010
HS Compressor
203026
High Voltage Board
191932
High Pressure Cutout
207008
LS Compressor
203026
HS Fan
900113
J30-5
J30-4
J30-3
J30-2
J30-1
J29-1
J29-7
J29-2
J29-8
J29-3
J29-9
J29-4
J29-10
J29-5
J29-11
J29-6
J29-12
Electrical Schematic
120V
ULT Freezer
(V - -86)
8700-70-1-D Rev. 1
Page 1 of 3

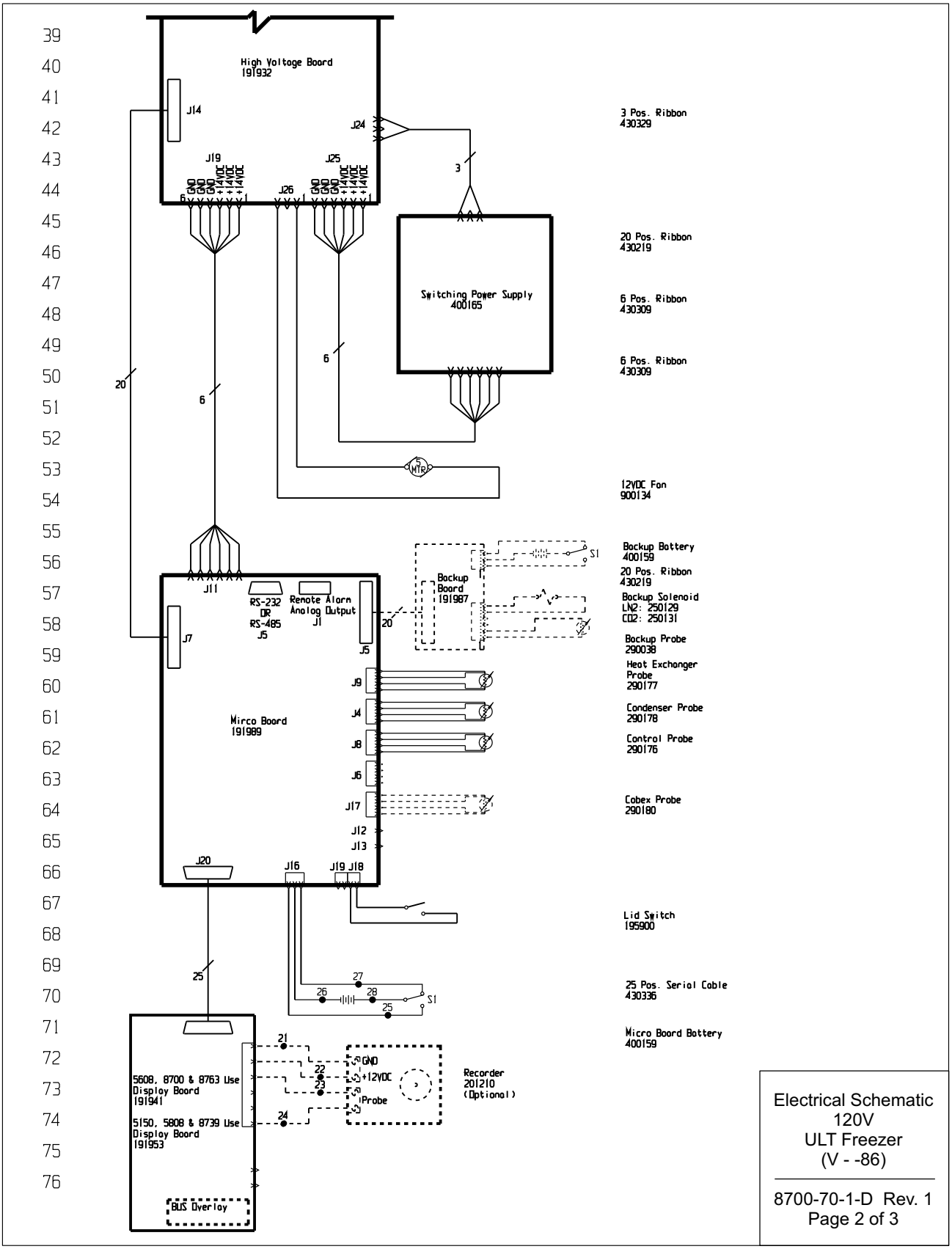


Electrical Schematic
120V
ULT Freezer
(V - -86)

8700-70-1-D Rev. 1
Page 2 of 3

| WIRE # | COLOR | GAUGE | WIRE # | COLOR | GAUGE |
|---|---|---|---|---|---|
| 1 | BLK | 14 | 25 | WHT | 18 |
| 2 | RED | 14 | 26 | BLK | 18 |
| 3 | GRN/YEL | 14 | 27 | BLK | 18 |
| 4 | RED | 14 | 28 | RED | 18 |
| 5 | BLK | 14 | 29 | | |
| 6 | BLK | 18 | 30 | | |
| 7 | BLK | 18 | 31 | GRN/YEL | 14 |
| 8 | | | 32 | BLK | 14 |
| 9 | | | 33 | BLU | 14 |
| 10 | | | 34 | BLK | 14 |
| 11 | | | 35 | BLU | 14 |
| 12 | | | 36 | BLK | 14 |
| 13 | | | 37 | BLU | 14 |
| 14 | GRN/YEL | 18 | 38 | BLK | 14 |
| 15 | | | 39 | BLU | 14 |
| 16 | GRN/YEL | 18 | 40 | BLK | 14 |
| 17 | GRN/YEL | 14 | 41 | BLU | 14 |
| 18 | GRN/YEL | 14 | 42 | BLK | 14 |
| 19 | BLK | 14 | 43 | BLU | 14 |
| 20 | BLK | 14 | | | |
| 21 | BLK | 18 | | | |
| 22 | RED | 18 | | | |
| 23 | BLK | 18 | | | |
| 24 | RED | 18 | | | |

3 CU.FT. CHEST MODELS:
5150, 5608, 5808, 8700, 8739, 8763

SW3 SETTINGS

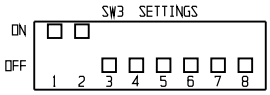


RS-232 SPECIFICATION

BAUD = 1200
PARITY = N
BITS = 8
STOP BITS = 2

| RS-232 PORT | |
|---|---|
| PIN# 2 | TXD |
| PIN# 3 | RXD |
| PIN# 5 | GND |

| REMOTE CONTACTS/ANALOG OUTPUT | |
|---|---|
| PIN# 1 | Analog Output + |
| PIN# 2 | Analog Output - |
| PIN# 3 | Not Connected |
| PIN# 4 | Not Connected |
| PIN# 5 | Normally Closed |
| PIN# 6 | Common. |
| PIN# 7 | Normally Open |

CONTACT RATING: 1A @ 30V
CONTACTS IN ALARM STATE

SW1 Settings for Analog Output

4-20mA Output

0-1V Output

0-5V Output

SW2 Settings for Communication Output

RS-485

RS-232

1. Lid switch shown in open position.
2. Battery switch shown in the OFF position.
3. Circuit breaker switch shown in OFF position.
4. Options and acessories shown in doshed lines.

| REV | ECN NO. | DATE | BY | CAD | APPD | DESCRIPTION OF REVISION |
|---|---|---|---|---|---|---|
| 1 | FR-2386 | 08/08/12 | CCS | CCS | CCS | CORRECTED VOLTAGE RANGE |
| 0 | FR-2202 | 05/03/11 | SRS | SAG | CCS | RELEASED FOR PRODUCTION / RELEASE 6 |

THIS DOCUMENT CONTAINS PROPRIETARY INFORMATION AND SUCH INFORMATION IS NOT TO BE DISCLOSED TO OTHERS FOR ANY PURPOSE NOR USED FOR MANUFACTURING PURPOSES WITHOUT WRITTEN PERMISSION FROM THERMO FISHER SCIENTIFIC

MODEL/PART NAME: 5600 SERIES, 120V, ULT FREEZERS
DWG TITLE: UNIT SCHEMATIC
DWN: HCE | CAD: KDG | APPD: LDN | DATE: 10-10-10 | SCALE: NONE
MATERIAL:
PAINT COLOR:
TOLERANCE UNLESS OTHERWISE SPECIFIED
ANGLES: DECIMAL: .XX=± .XXX=±
DRAWING NUMBER 8700-70-1
SIZE D

ThermoFisher SCIENTIFIC
BOX 649, MARIETTA, OHIO 45750

ATTENTION
OBSERVE PRECAUTIONS
ELECTROSTATIC
SENSITIVE DEVICES

Electrical Schematic
120V
ULT Freezer
(V - -86)

8700-70-1-D Rev. 1
Page 3 of 3

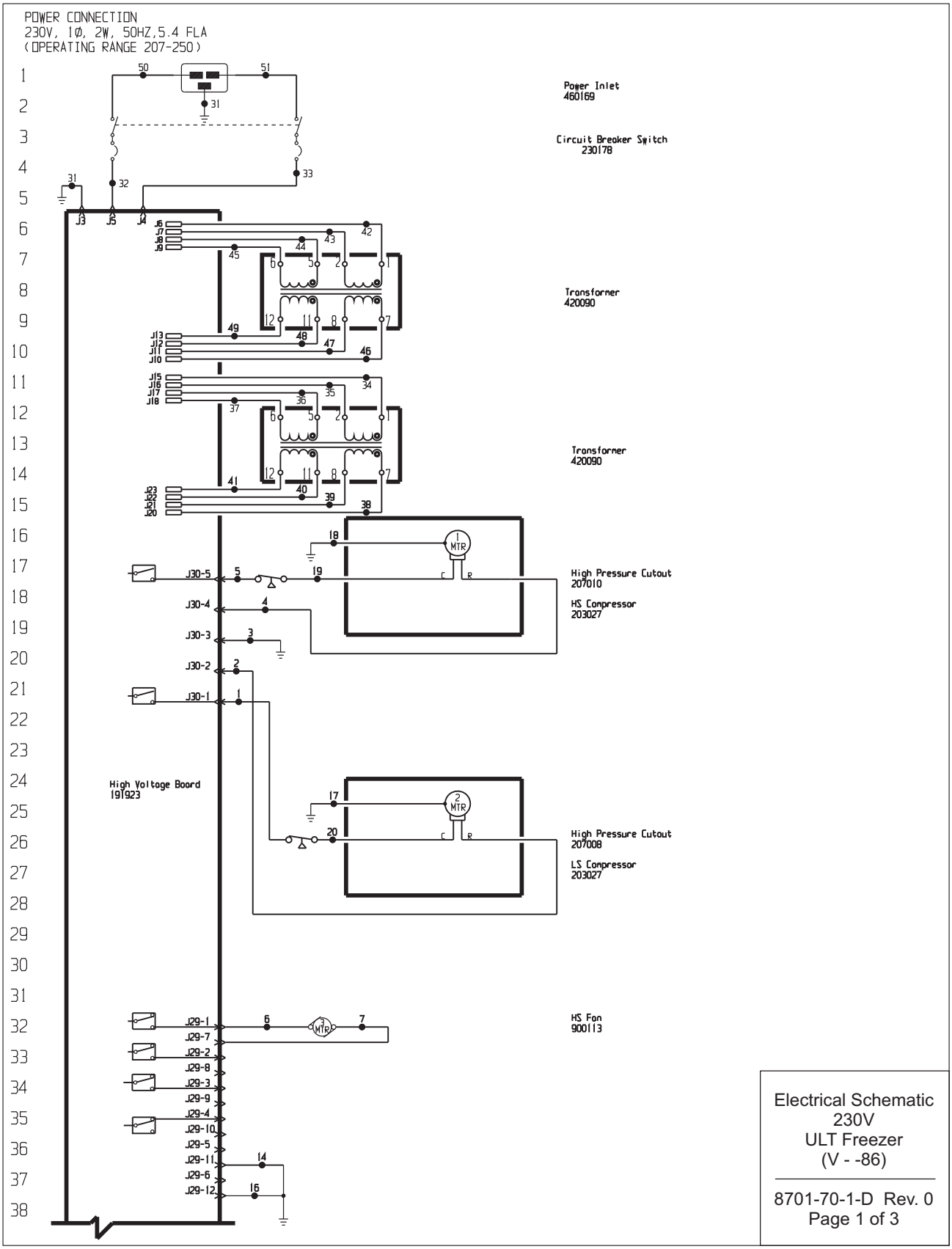


Electrical Schematic
230V
ULT Freezer
(V - -86)

8701-70-1-D Rev. 0
Page 1 of 3

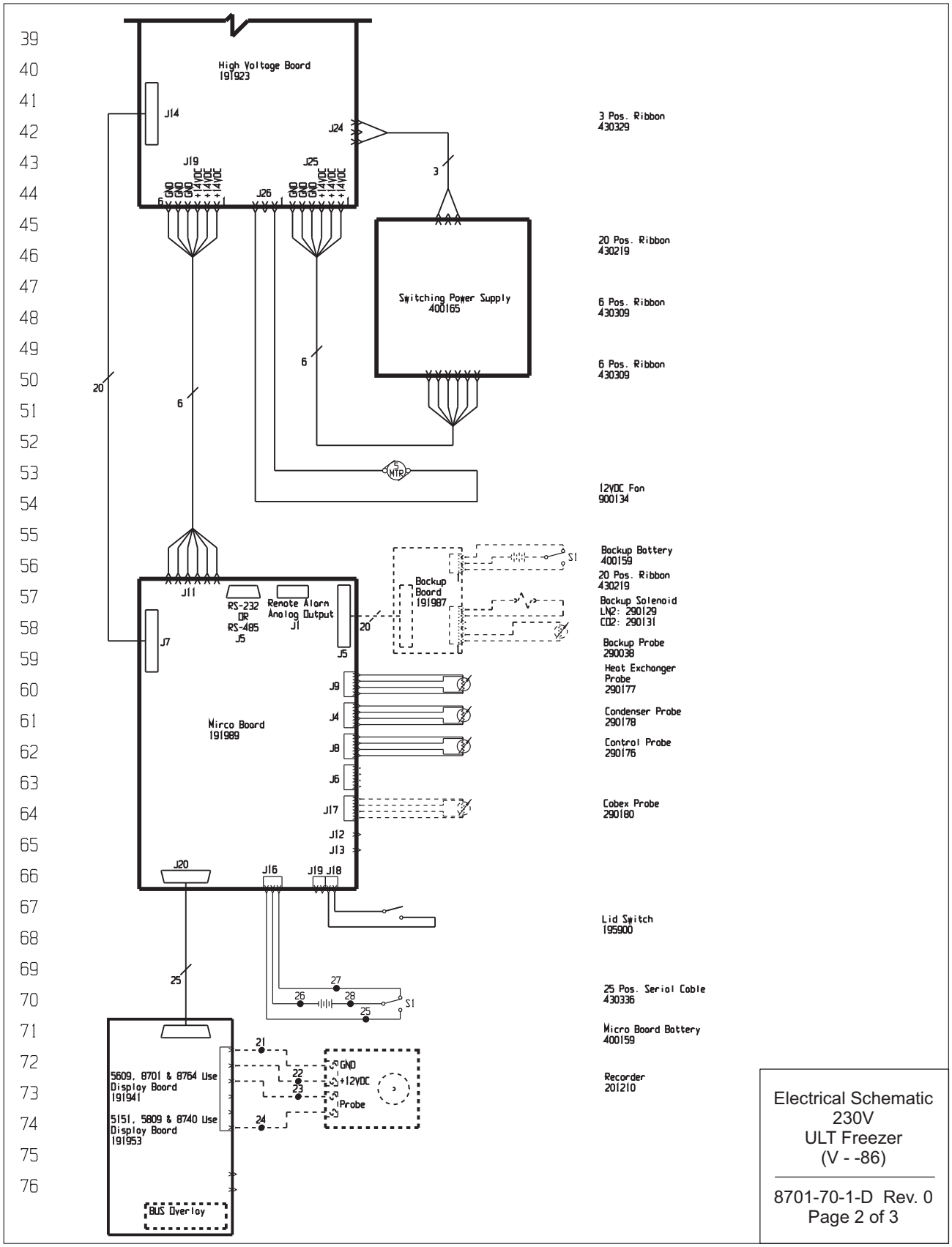
High Voltage Board
191923
J14
J24
J19
J25
J26
GND
+14VDC
3 Pos. Ribbon
430329
20 Pos. Ribbon
430219
Switching Power Supply
400165
6 Pos. Ribbon
430309
6 Pos. Ribbon
430309
12VDC Fan
900134
Backup Battery
400159
20 Pos. Ribbon
430219
Backup Solenoid
LN2: 290129
CO2: 290131
Backup Probe
290038
Heat Exchanger
Probe
290177
Condenser Probe
290178
Control Probe
290176
Cobex Probe
290180
Lid Switch
195900
25 Pos. Serial Cable
430336
Micro Board Battery
400159
Recorder
201210
Backup
Board
191987
S1
J11
RS-232
OR
RS-485
J5
Remote Alarm
Analog Output
J1
J7
J5
Mirco Board
191989
J9
J4
J8
J6
J17
J12
J13
J20
J16
J19 J18
5609, 8701 & 8764 Use
Display Board
191941
5151, 5809 & 8740 Use
Display Board
191953
GND
+12VDC
Probe
BUS Overlay
Electrical Schematic
230V
ULT Freezer
(V - -86)
8701-70-1-D Rev. 0
Page 2 of 3

| WIRE # | COLOR | GAUGE |
|---|---|---|
| 1 | BLK | 14 |
| 2 | RED | 14 |
| 3 | GRN/YEL | 14 |
| 4 | RED | 14 |
| 5 | BLK | 14 |
| 6 | BLK | 18 |
| 7 | BLK | 18 |
| 8 | | |
| 9 | | |
| 10 | | |
| 11 | | |
| 12 | | |
| 13 | | |
| 14 | GRN/YEL | 18 |
| 15 | | |
| 16 | GRN/YEL | 18 |
| 17 | GRN/YEL | 14 |
| 18 | GRN/YEL | 14 |
| 19 | BLK | 14 |
| 20 | BLK | 14 |
| 21 | BLK | 18 |
| 22 | RED | 18 |
| 23 | BLK | 18 |
| 24 | RED | 18 |

| WIRE # | COLOR | GAUGE |
|---|---|---|
| 25 | WHT | 18 |
| 26 | BLK | 18 |
| 27 | BLK | 18 |
| 28 | RED | 18 |
| 29 | | |
| 30 | | |
| 31 | GRN/YEL | 14 |
| 32 | BLK | 14 |
| 33 | BLU | 14 |
| 34 | BLK | 14 |
| 35 | BLU | 14 |
| 36 | BLK | 14 |
| 37 | BLU | 14 |
| 38 | BLK | 14 |
| 39 | BLU | 14 |
| 40 | BLK | 14 |
| 41 | BLU | 14 |
| 42 | BLK | 14 |
| 43 | BLU | 14 |
| 44 | BLK | 14 |
| 45 | BLU | 14 |
| 46 | BLK | 14 |
| 47 | BLU | 14 |
| 48 | BLK | 14 |
| 49 | BLU | 14 |
| 50 | BLK | 14 |
| 51 | BLU | 14 |

3 CU.FT. CHEST MODELS:
5151, 5809, 8701, 8740, 8764

SW3 SETTINGS

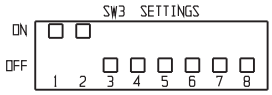


| REMOTE CONTACTS/ANALOG OUTPUT | |
|---|---|
| PIN# 1 | Analog Output + |
| PIN# 2 | Analog Output - |
| PIN# 3 | Not Connected |
| PIN# 4 | Not Connected |
| PIN# 5 | Normally Closed |
| PIN# 6 | Common. |
| PIN# 7 | Normally Open |

CONTACT RATING: 1A @ 30V
CONTACTS IN ALARM STATE

RS-232 SPECIFICATION

BAUD = 1200
PARITY = N
BITS = 8
STOP BITS = 2

| RS-232 PORT | |
|---|---|
| PIN# 2 | TXD |
| PIN# 3 | RXD |
| PIN# 5 | GND |

SW1 Settings for Analog Output

4-20mA Output

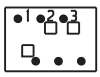


0-1V Output

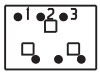


0-5V Output

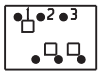


SW2 Settings for Communication Output

RS-485

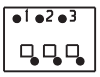


RS-232

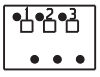


1. Lid switch shown in open position.
2. Battery switch shown in the OFF position.
3. Circuit breaker switch shown in OFF position.
4. Options and acessories shown in dashed lines.

| REV | ECN NO. | DATE | BY | CAD | APPD | DESCRIPTION OF REVISION |
|---|---|---|---|---|---|---|
| 0 | FR-2202 | 05/19/11 | SRS | SAG | CCS | RELEASED FOR PRODUCTION / RELEASE 6 |

ATTENTION
OBSERVE PRECAUTIONS
ELECTROSTATIC
SENSITIVE DEVICES

THIS DOCUMENT CONTAINS PROPRIETARY INFORMATION AND SUCH INFORMATION IS NOT TO BE DISCLOSED TO OTHERS FOR ANY PURPOSE NOR USED FOR MANUFACTURING PURPOSES WITHOUT WRITTEN PERMISSION FROM THERMO FISHER SCIENTIFIC

ThermoFisher SCIENTIFIC
BOX 649, MARIETTA, OHIO 45750

MODEL/PART NAME: 5600 SERIES, 230V, ULT FREEZERS
DWG TITLE: UNIT SCHEMATIC
DWN: SAG | CAD: SAG | APPD: LDN | DATE: 05/19/11 | SCALE: NONE
MATERIAL:
PAINT COLOR:
TOLERANCE UNLESS OTHERWISE SPECIFIED
ANGLES: DECIMAL: .XX=± .XXX=±
DRAWING NUMBER 8701-70-1
SIZE D

Electrical Schematic
230V
ULT Freezer
(V - -86)

8701-70-1-D Rev. 0
Page 3 of 3

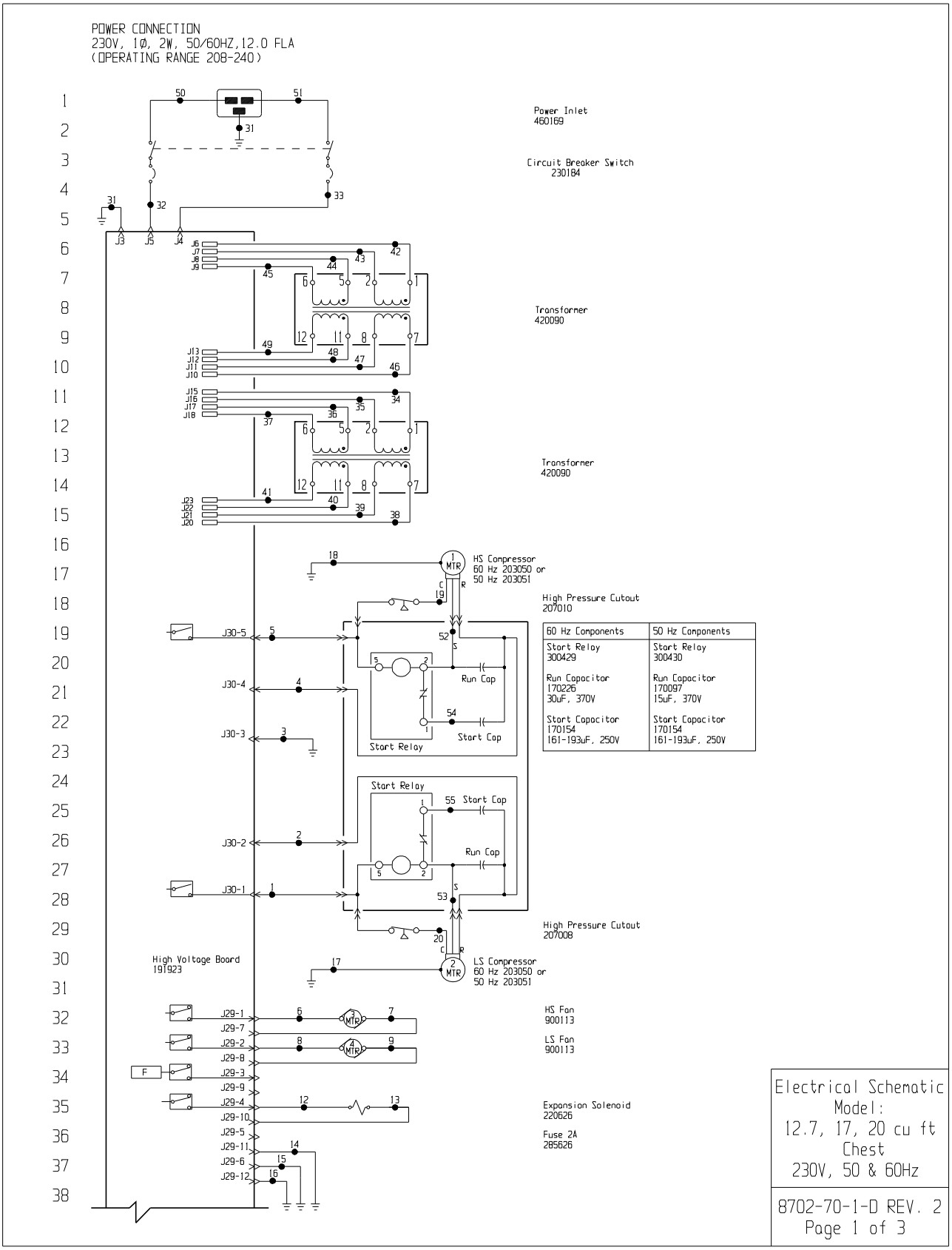


| 60 Hz Components | 50 Hz Components |
|---|---|
| Start Relay<br>300429 | Start Relay<br>300430 |
| Run Capacitor<br>170226<br>30uF, 370V | Run Capacitor<br>170097<br>15uF, 370V |
| Start Capacitor<br>170154<br>161-193uF, 250V | Start Capacitor<br>170154<br>161-193uF, 250V |

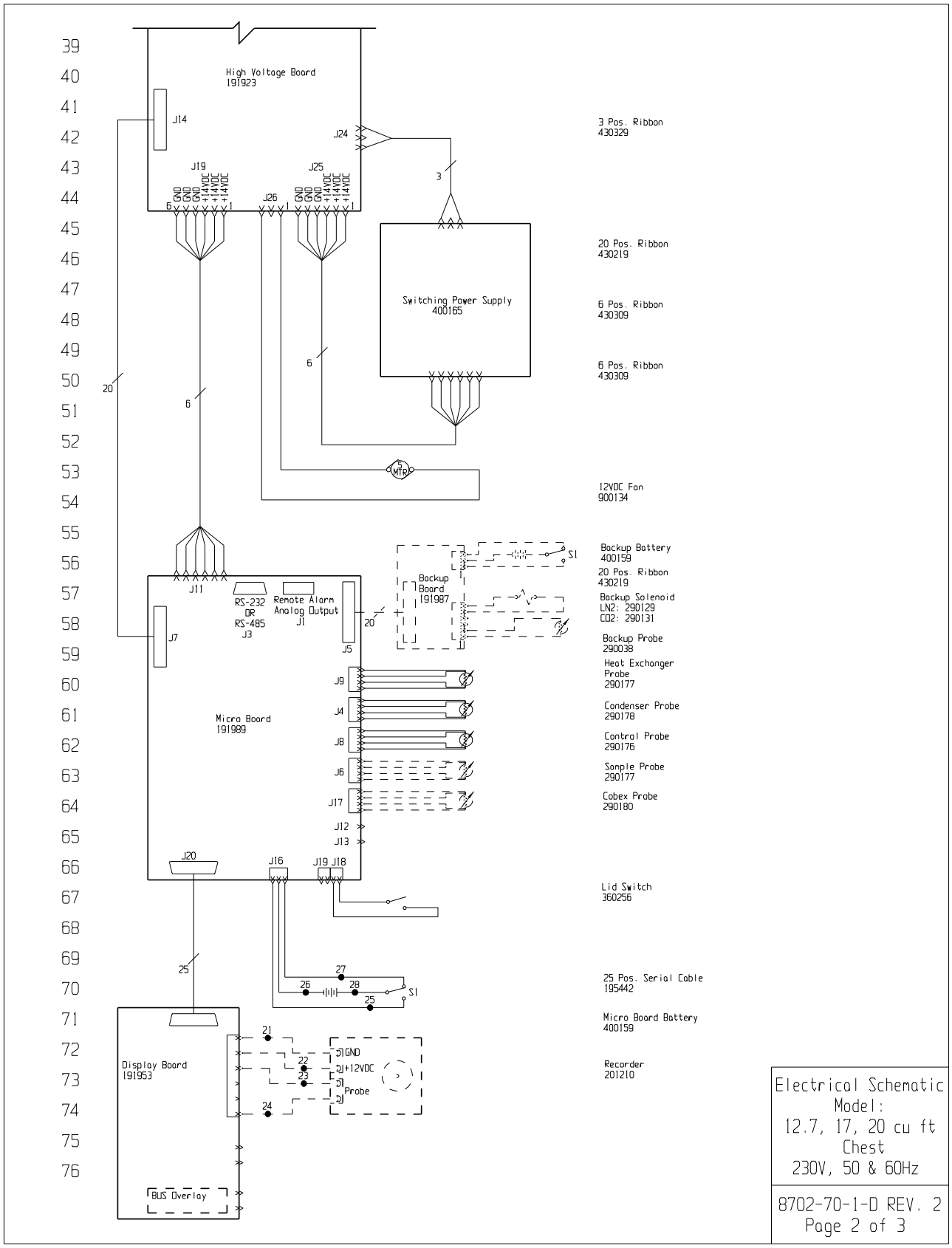
High Voltage Board
191923
J14
J24
J19
J25
J26
GND
+14VDC
3 Pos. Ribbon
430329
20 Pos. Ribbon
430219
Switching Power Supply
400165
6 Pos. Ribbon
430309
6 Pos. Ribbon
430309
MTR
12VDC Fan
900134
Backup Battery
400159
S1
20 Pos. Ribbon
430219
Backup Board
191987
Backup Solenoid
LN2: 290129
CO2: 290131
Backup Probe
290038
Heat Exchanger
Probe
290177
Condenser Probe
290178
Control Probe
290176
Sample Probe
290177
Cobex Probe
290180
J11
RS-232
OR
RS-485
J3
Remote Alarm
Analog Output
J1
J5
J7
J9
J4
J8
J6
J17
J12
J13
Micro Board
191989
J20
J16
J19 J18
Lid Switch
360256
25 Pos. Serial Cable
195442
Micro Board Battery
400159
Recorder
201210
Display Board
191953
GND
+12VDC
Probe
BUS Overlay
Electrical Schematic
Model:
12.7, 17, 20 cu ft
Chest
230V, 50 & 60Hz
8702-70-1-D REV. 2
Page 2 of 3

| WIRE # | COLOR | GAUGE | WIRE # | COLOR | GAUGE |
|---|---|---|---|---|---|
| 1 | BLK | 14 | 29 | - | - |
| 2 | RED | 14 | 30 | - | - |
| 3 | GRN/YEL | 14 | 31 | GRN/YEL | 14 |
| 4 | RED/WHT | 14 | 32 | BLK | 14 |
| 5 | BLK/WHT | 14 | 33 | BLU | 14 |
| 6 | BLK | 18 | 34 | BLK | 14 |
| 7 | BLK | 18 | 35 | BLU | 14 |
| 8 | BLK | 18 | 36 | BLK | 14 |
| 9 | BLK | 18 | 37 | BLU | 14 |
| 10 | BLK | 18 | 38 | BLK | 14 |
| 11 | BLK | 18 | 39 | BLU | 14 |
| 12 | BLK | 18 | 40 | BLK | 14 |
| 13 | BLK | 18 | 41 | BLU | 14 |
| 14 | GRN/YEL | 18 | 42 | BLK | 14 |
| 15 | GRN/YEL | 18 | 43 | BLU | 14 |
| 16 | GRN/YEL | 18 | 44 | BLK | 14 |
| 17 | GRN/YEL | 14 | 45 | BLU | 14 |
| 18 | GRN/YEL | 14 | 46 | BLK | 14 |
| 19 | BLK/WHT | 14 | 47 | BLU | 14 |
| 20 | BLK | 14 | 48 | BLK | 14 |
| 21 | BLK | 18 | 49 | BLU | 14 |
| 22 | RED | 18 | 50 | BLK | 14 |
| 23 | BLK | 18 | 51 | BLU | 14 |
| 24 | RED | 18 | 52 | YEL/WHT | 14 |
| 25 | WHT | 18 | 53 | YEL | 14 |
| 26 | BLK | 18 | 54 | BLU/WHT | 14 |
| 27 | BLK | 18 | 55 | BLU | 14 |
| 28 | RED | 18 | | | |

CHEST MODELS:
12.7 CU.FT. - 5152, 5158, 5612, 5812, 5813, 8702, 8703, 8742, 8743, 8765, 8767
17 CU.FT. - 5155, 5159, 5819, 5822, 8706, 8707, 8746, 8747, 8770, 8771
20 CU.FT. - 5156, 5160, 5620, 5820, 5823, 8708, 8709, 8749, 8750, 8772, 8773

| REMOTE CONTACTS/ANALOG OUTPUT | |
|---|---|
| PIN# 1 | Analog Output + |
| PIN# 2 | Analog Output - |
| PIN# 3 | Not Connected |
| PIN# 4 | Not Connected |
| PIN# 5 | Normally Closed |
| PIN# 6 | Common. |
| PIN# 7 | Normally Open |

CONTACT RATING: 1A @ 30V
CONTACTS IN ALARM STATE

RS-232 SPECIFICATION

BAUD = 1200
PARITY = N
BITS = 8
STOP BITS = 2

| RS-232 PORT | |
|---|---|
| PIN# 2 | TXD |
| PIN# 3 | RXD |
| PIN# 5 | GND |

SW1 Settings for Analog Output

4-20mA Output

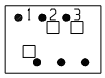


0-1V Output

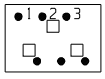


0-5V Output

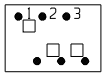


SW2 Settings for Communication Output

RS-485

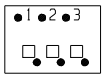


RS-232

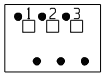


SW3 SETTINGS

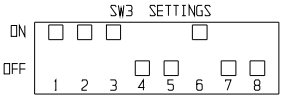


1. Schematic represents chest models.
2. Door switches shown in open position.
3. Battery switch shown in the OFF position.
4. Circuit breaker switch shown in OFF position.
5. Options and acessories shown in dashed lines.

| REV | ECN NO. | DATE | BY | CAD | APPD | DESCRIPTION OF REVISION |
|---|---|---|---|---|---|---|
| 2 | FR-2386 | 07-27-12 | MAM | KDG | CCS | CHG. 300421 RELAY TO 300429, 300420 TO 300430 |
| 1 | FR-2267 | 08/17/11 | JWE | SAG | DRP | COMPRESSOR CHANGE / RELEASE 7 |
| 0 | FR-2202 | 05/04/11 | SRS | SAG | DLP | RELEASED FOR PRODUCTION / RELEASE 6 |

Electrical Schematic
Model:
12.7, 17, 20 cu ft
Chest
230V, 50 & 60Hz

ATTENTION
OBSERVE PRECAUTIONS
ELECTROSTATIC
SENSITIVE DEVICES

THIS DOCUMENT CONTAINS PROPRIETARY INFORMATION AND SUCH INFORMATION IS NOT TO BE DISCLOSED TO OTHERS FOR ANY PURPOSE NOR USED FOR MANUFACTURING PURPOSES WITHOUT WRITTEN PERMISSION FROM THERMO FISHER SCIENTIFIC

ThermoFisher SCIENTIFIC
BOX 649, MARIETTA, OHIO 45750

MODEL/PART NAME: ULT -86C CHEST FREEZERS, 230V, 50 & 60Hz
DWG TITLE: UNIT SCHEMATIC
DWN: SAG | CAD: SAG | APPD: | DATE: 05/04/11 | SCALE: NONE
MATERIAL:
PAINT COLOR:
TOLERANCE UNLESS OTHERWISE SPECIFIED
ANGLES: DECIMAL: .XX=± .XXX=±
DRAWING NUMBER 8702-70-1
SIZE D

8702-70-1-D REV. 2
Page 3 of 3

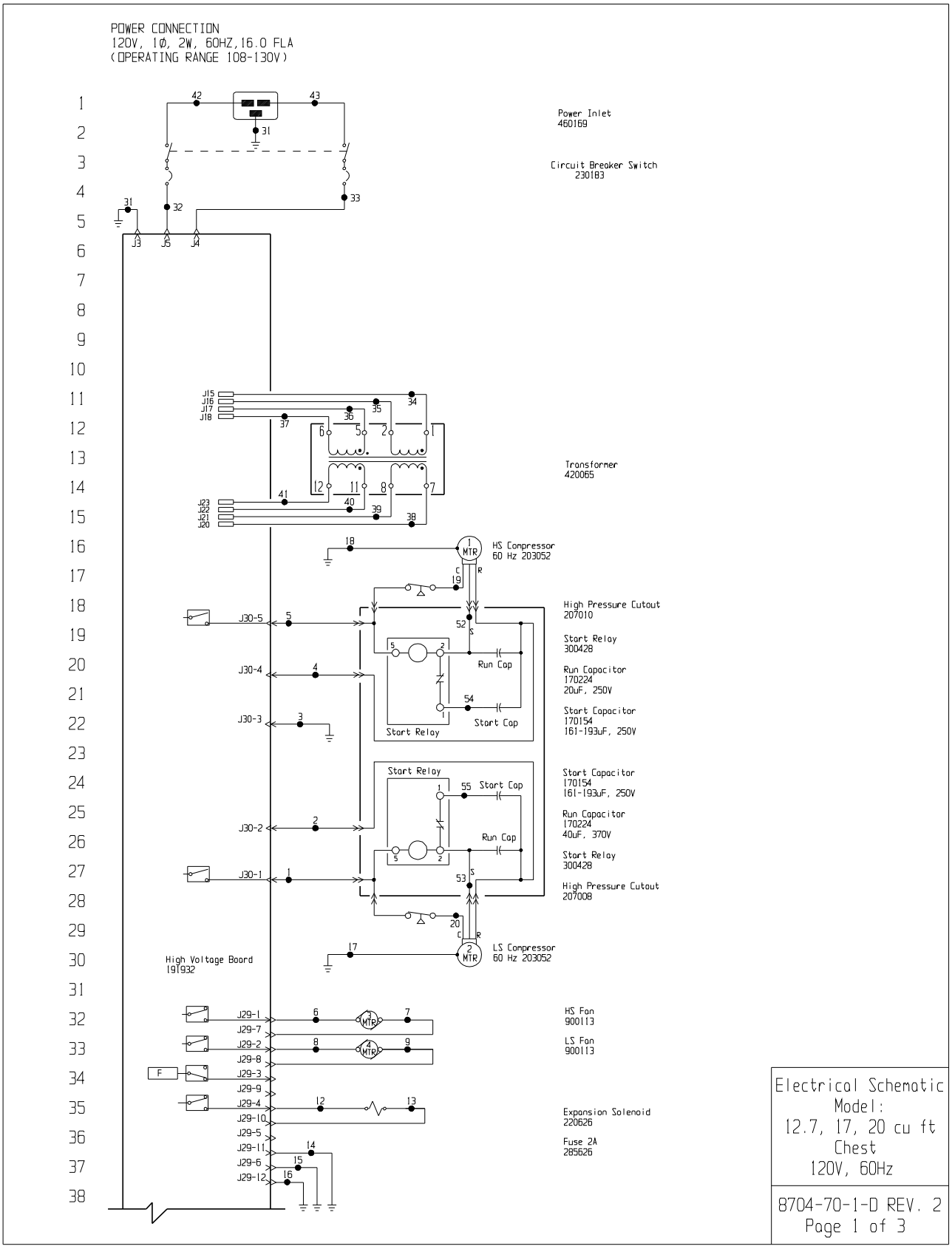
POWER CONNECTION
120V, 1Ø, 2W, 60HZ, 16.0 FLA
(OPERATING RANGE 108-130V)
Power Inlet
460169
Circuit Breaker Switch
230183
Transformer
420065
HS Compressor
60 Hz 203052
High Pressure Cutout
207010
Start Relay
300428
Run Capacitor
170224
20uF, 250V
Start Capacitor
170154
161-193uF, 250V
Start Capacitor
170154
161-193uF, 250V
Run Capacitor
170224
40uF, 370V
Start Relay
300428
High Pressure Cutout
207008
LS Compressor
60 Hz 203052
High Voltage Board
191932
HS Fan
900113
LS Fan
900113
Expansion Solenoid
220626
Fuse 2A
285626
Electrical Schematic
Model:
12.7, 17, 20 cu ft
Chest
120V, 60Hz
8704-70-1-D REV. 2
Page 1 of 3

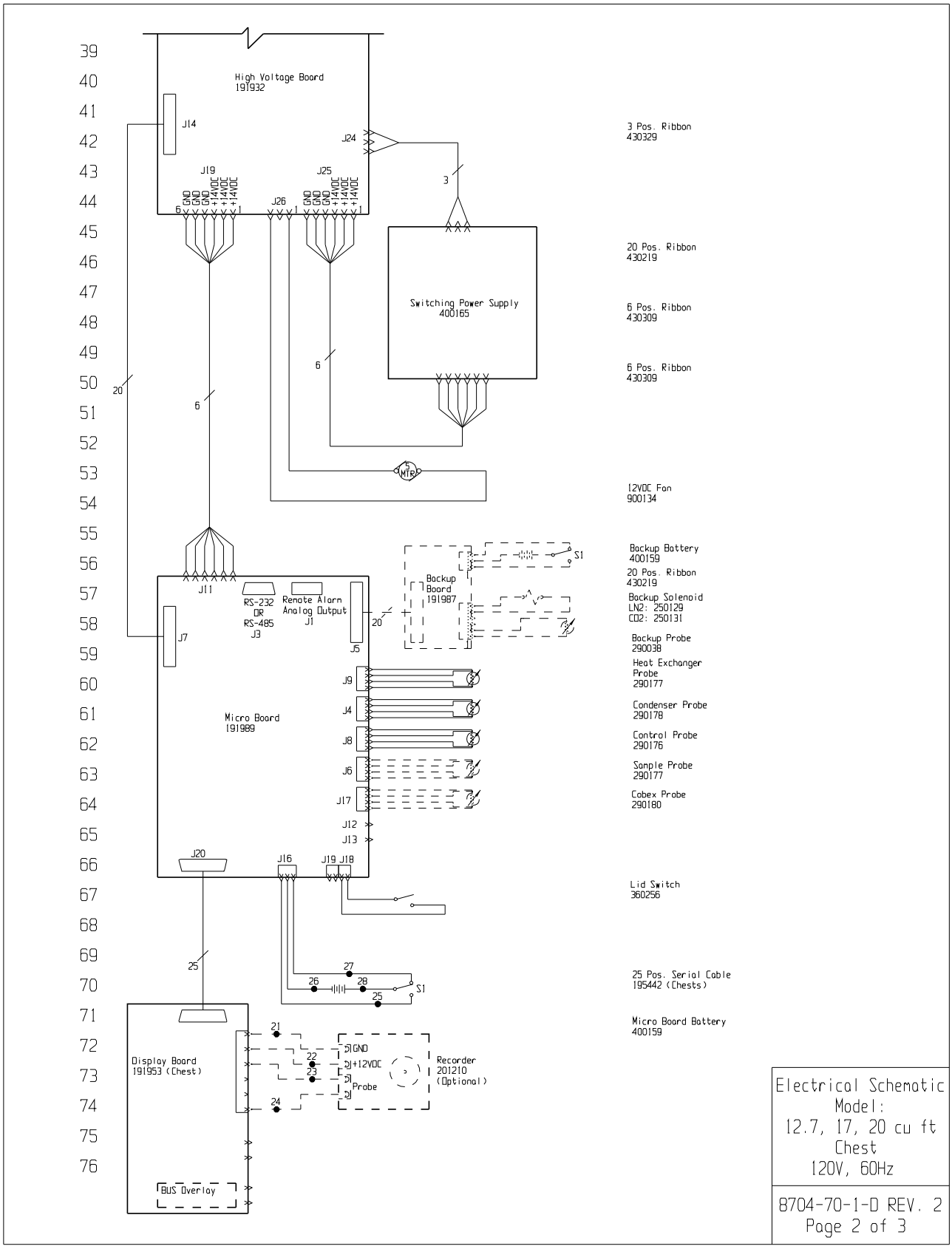
High Voltage Board
191932
J14
J24
J19
J25
J26
GND
+14VDC
3
6
20
Switching Power Supply
400165
MTR
J11
RS-232
OR
RS-485
J3
Remote Alarm
Analog Output
J1
J5
J7
Backup
Board
191987
S1
Micro Board
191989
J9
J4
J8
J6
J17
J12
J13
J20
J16
J19 J18
25
27
26
28
Display Board
191953 (Chest)
21
22
23
24
GND
+12VDC
Probe
Recorder
201210
(Optional)
BUS Overlay
3 Pos. Ribbon
430329
20 Pos. Ribbon
430219
6 Pos. Ribbon
430309
6 Pos. Ribbon
430309
12VDC Fan
900134
Backup Battery
400159
20 Pos. Ribbon
430219
Backup Solenoid
LN2: 250129
CO2: 250131
Backup Probe
290038
Heat Exchanger
Probe
290177
Condenser Probe
290178
Control Probe
290176
Sanple Probe
290177
Cabex Probe
290180
Lid Switch
360256
25 Pos. Serial Cable
195442 (Chests)
Micro Board Battery
400159
Electrical Schematic
Model:
12.7, 17, 20 cu ft
Chest
120V, 60Hz
8704-70-1-D REV. 2
Page 2 of 3

| WIRE # | COLOR | GAUGE | WIRE # | COLOR | GAUGE |
|---|---|---|---|---|---|
| 1 | BLK | 14 | 29 | - | - |
| 2 | RED | 14 | 30 | - | - |
| 3 | GRN/YEL | 14 | 31 | GRN/YEL | 14 |
| 4 | RED/WHT | 14 | 32 | BLK | 14 |
| 5 | BLK/WHT | 14 | 33 | BLU | 14 |
| 6 | BLK | 18 | 34 | BLK | 14 |
| 7 | BLK | 18 | 35 | BLU | 14 |
| 8 | BLK | 18 | 36 | BLK | 14 |
| 9 | BLK | 18 | 37 | BLU | 14 |
| 10 | BLK | 18 | 38 | BLK | 14 |
| 11 | BLK | 18 | 39 | BLU | 14 |
| 12 | BLK | 18 | 40 | BLK | 14 |
| 13 | BLK | 18 | 41 | BLU | 14 |
| 14 | GRN/YEL | 18 | 42 | BLK | 14 |
| 15 | GRN/YEL | 18 | 43 | BLU | 14 |
| 16 | GRN/YEL | 18 | 44 | - | - |
| 17 | GRN/YEL | 14 | 45 | - | - |
| 18 | GRN/YEL | 14 | 46 | - | - |
| 19 | BLK/WHT | 14 | 47 | - | - |
| 20 | BLK | 14 | 48 | - | - |
| 21 | BLK | 18 | 49 | - | - |
| 22 | RED | 18 | 50 | - | - |
| 23 | BLK | 18 | 51 | - | - |
| 24 | RED | 18 | 52 | YEL/WHT | 14 |
| 25 | WHT | 18 | 53 | YEL | 14 |
| 26 | BLK | 18 | 54 | BLU/WHT | 14 |
| 27 | BLK | 18 | 55 | BLU | 14 |
| 28 | RED | 18 | | | |

CHEST MODELS:
12.7 CU.FT. - 5153, 5615, 5815, 8704, 8744, 8768
17 CU.FT. - 5154, 5818, 8705, 8745, 8769
20 CU.FT. - 5157, 5621, 5821, 8710, 8751, 8774

RS-232 SPECIFICATION

BAUD = 1200
PARITY = N
BITS = 8
STOP BITS = 2

| RS-232 PORT | |
|---|---|
| PIN# 2 | TXD |
| PIN# 3 | RXD |
| PIN# 5 | GND |

| REMOTE CONTACTS/ANALOG OUTPUT | |
|---|---|
| PIN# 1 | Analog Output + |
| PIN# 2 | Analog Output - |
| PIN# 3 | Not Connected |
| PIN# 4 | Not Connected |
| PIN# 5 | Normally Closed |
| PIN# 6 | Common. |
| PIN# 7 | Normally Open |

CONTACT RATING: 1A @ 30V
CONTACTS IN ALARM STATE

SW1 Settings for Analog Output

4-20mA Output

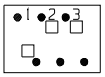


0-1V Output

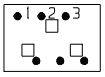


0-5V Output

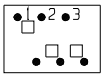


SW2 Settings for Communication Output

RS-485

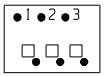


RS-232

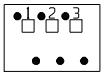


SW3 SETTINGS

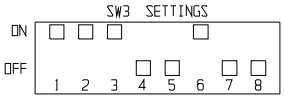


1. Schematic represents chest models.
2. Door switches shown in open position.
3. Battery switch shown in the OFF position.
4. Circuit breaker switch shown in OFF position.
5. Options and acessories shown in dashed lines.

| REV | ECN NO. | DATE | BY | CAD | APPD | DESCRIPTION OF REVISION |
|---|---|---|---|---|---|---|
| 2 | FR-2386 | 07-27-12 | WAM | KDG | CCS | CHG. 300421 START RELAY TO 300428 |
| 1 | FR-2267 | 08/17/11 | SAG | SAG | DRP | COMPRESSOR CHANGE / RELEASE 7 |
| 0 | FR-2202 | 05/04/11 | SRS | SAG | DRP | RELEASED FOR PRODUCTION / RELEASE 6 |

Electrical Schematic
Model:
12.7, 17, 20 cu ft
Chest
120V, 60Hz

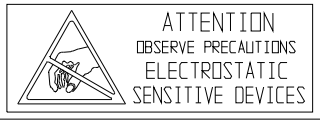


THIS DOCUMENT CONTAINS PROPRIETARY INFORMATION AND SUCH INFORMATION IS NOT TO BE DISCLOSED TO OTHERS FOR ANY PURPOSE NOR USED FOR MANUFACTURING PURPOSES WITHOUT WRITTEN PERMISSION FROM THERMO FISHER SCIENTIFIC

Thermo Fisher SCIENTIFIC
BOX 649, MARIETTA, OHIO 45750

MODEL/PART NAME: ULT -86C CHEST FREEZERS, 120V, 60Hz
DWG TITLE: UNIT SCHEMATIC
DWN: SAG | CAD: SAG | APPD: DRP | DATE: 05-04-11 | SCALE: NONE
MATERIAL:
PAINT COLOR:
TOLERANCE UNLESS OTHERWISE SPECIFIED
ANGLES: DECIMAL: .XX=± .XXX=±
DRAWING NUMBER 8704-70-1
SIZE D

8704-70-1-D REV. 2
Page 3 of 3

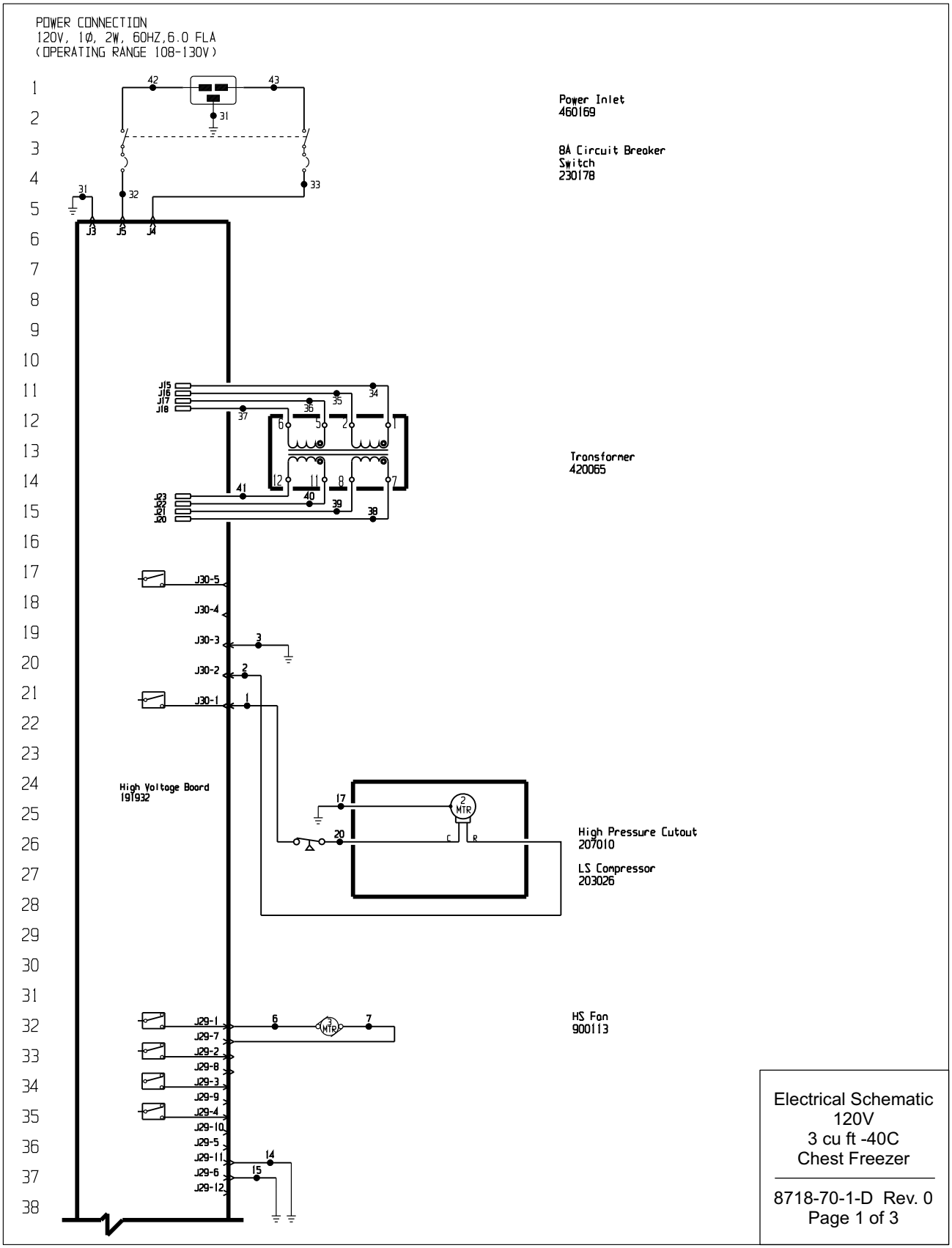
POWER CONNECTION
120V, 1Ø, 2W, 60HZ,6.0 FLA
(OPERATING RANGE 108-130V)
Power Inlet
460169
8A Circuit Breaker
Switch
230178
Transformer
420065
High Voltage Board
191932
High Pressure Cutout
207010
LS Compressor
203026
HS Fan
900113
Electrical Schematic
120V
3 cu ft -40C
Chest Freezer
8718-70-1-D Rev. 0
Page 1 of 3

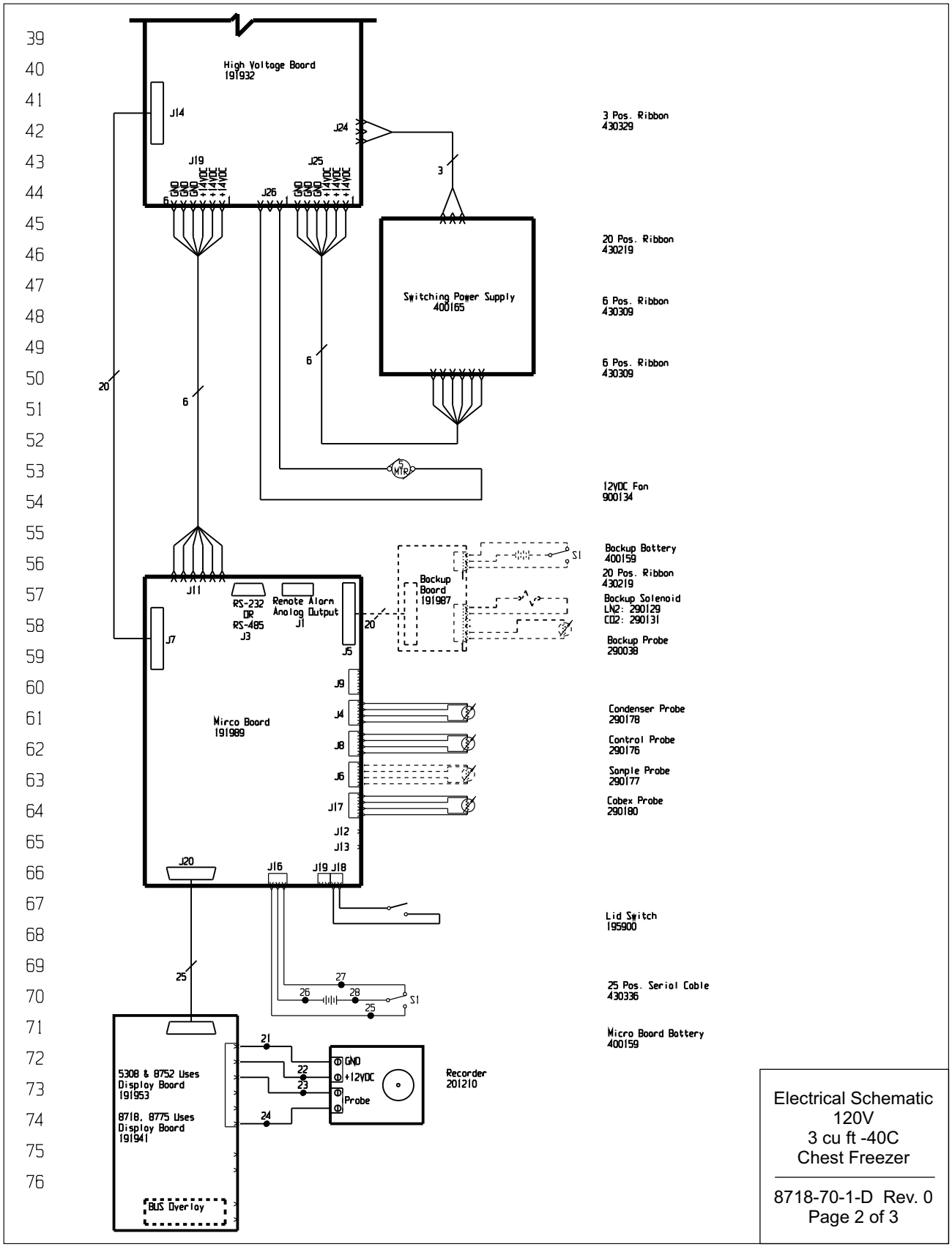
High Voltage Board
191932
J14
J24
J19
J25
J26
GND
+14VDC
3 Pos. Ribbon
430329
20 Pos. Ribbon
430219
Switching Power Supply
400165
6 Pos. Ribbon
430309
6 Pos. Ribbon
430309
MTR
12VDC Fan
900134
Backup Battery
400159
20 Pos. Ribbon
430219
Backup Solenoid
LN2: 290129
CO2: 290131
Backup Probe
290038
Backup
Board
191987
S1
J11
RS-232
OR
RS-485
J3
Remote Alarm
Analog Output
J1
J5
J7
J9
J4
J8
J6
J17
J12
J13
J20
J16
J19 J18
Mirco Board
191989
Condenser Probe
290178
Control Probe
290176
Sample Probe
290177
Cobex Probe
290180
Lid Switch
195900
25 Pos. Serial Cable
430336
Micro Board Battery
400159
5308 & 8752 Uses
Display Board
191953
8718, 8775 Uses
Display Board
191941
BUS Overlay
GND
+12VDC
Probe
Recorder
201210
Electrical Schematic
120V
3 cu ft -40C
Chest Freezer
8718-70-1-D Rev. 0
Page 2 of 3

| WIRE # | COLOR | GAUGE |
|---|---|---|
| 1 | BLK | 14 |
| 2 | RED | 14 |
| 3 | GRN/YEL | 14 |
| 4 | | |
| 5 | | |
| 6 | BLK | 18 |
| 7 | BLK | 18 |
| 8 | BLK | 18 |
| 9 | BLK | 18 |
| 10 | | |
| 11 | | |
| 12 | | |
| 13 | | |
| 14 | GRN/YEL | 18 |
| 15 | GRN/YEL | 18 |
| 16 | | |
| 17 | GRN/YEL | 14 |
| 18 | | |
| 19 | | |
| 20 | BLK | 14 |
| 21 | BLK | 18 |
| 22 | RED | 18 |
| 23 | BLK | 18 |
| 24 | RED | 18 |

| WIRE # | COLOR | GAUGE |
|---|---|---|
| 25 | WHT | 18 |
| 26 | BLK | 18 |
| 27 | BLK | 18 |
| 28 | RED | 18 |
| 29 | | |
| 30 | | |
| 31 | GRN/YEL | 14 |
| 32 | BLK | 14 |
| 33 | BLU | 14 |
| 34 | BLK | 14 |
| 35 | BLU | 14 |
| 36 | BLK | 14 |
| 37 | BLU | 14 |
| 38 | BLK | 14 |
| 39 | BLU | 14 |
| 40 | BLK | 14 |
| 41 | BLU | 14 |
| 42 | BLK | 14 |
| 43 | BLU | 14 |

1. Door switch shown in open position.
2. Battery switch shown in the OFF position.
3. Circuit breaker switch shown in OFF position.
4. Options and acessories shown in dashed lines.

3 CU.FT. CHEST MODELS:
5308, 8718, 8752, 8775

SW3 SETTINGS

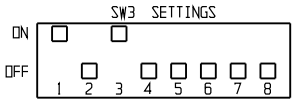


RS-232 SPECIFICATION

BAUD = 1200
PARITY = N
BITS = 8
STOP BITS = 2

| RS-232 PORT | |
|---|---|
| PIN# 2 | TXD |
| PIN# 3 | RXD |
| PIN# 5 | GND |

| REMOTE CONTACTS/ANALOG OUTPUT | |
|---|---|
| PIN# 1 | Analog Output + |
| PIN# 2 | Analog Output - |
| PIN# 3 | Not Connected |
| PIN# 4 | Not Connected |
| PIN #5 | Normally Closed |
| PIN# 6 | Common |
| PIN# 7 | Normally Open |

CONTACT RATING: 1A @ 30V
CAONTACTS IN ALARM STATE

SW1 Settings for Analog Output

4-20mA Output

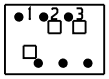


0-1V Output

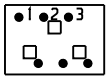


0-5V Output

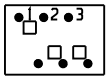


SW2 Settings for Communication Output

RS-485

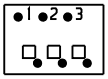


RS-232

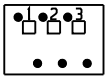


| REV | ECN NO. | DATE | BY | CAD | APPD | DESCRIPTION OF REVISION |
|---|---|---|---|---|---|---|
| 0 | FR-2202 | 05/03/11 | SRS | SAG | CCS | RELEASED FOR PRODUCTION / RELEASE 6 |

ATTENTION
OBSERVE PRECAUTIONS
ELECTROSTATIC
SENSITIVE DEVICES

THIS DOCUMENT CONTAINS PROPRIETARY INFORMATION AND SUCH INFORMATION IS NOT TO BE DISCLOSED TO OTHERS FOR ANY PURPOSE NOR USED FOR MANUFACTURING PURPOSES WITHOUT WRITTEN PERMISSION FROM THERMO FISHER SCIENTIFIC

ThermoFisher SCIENTIFIC
BOX 649, MARIETTA, OHIO 45750

MODEL/PART NAME: 3CF -40° CHEST FREEZER, 120V
DWG TITLE: ELECTRICAL SCHEMATIC
DWN: SAG | CAD: SAG | APPD: | DATE: 05/11/11 | SCALE: NONE
MATERIAL:
PAINT COLOR:
TOLERANCE UNLESS OTHERWISE SPECIFIED
ANGLES: DECIMAL: .XX=± .XXX=±
DRAWING NUMBER 8718-70-1
SIZE D

Electrical Schematic
120V
3 cu ft -40C
Chest Freezer

8718-70-1-D Rev. 0
Page 3 of 3

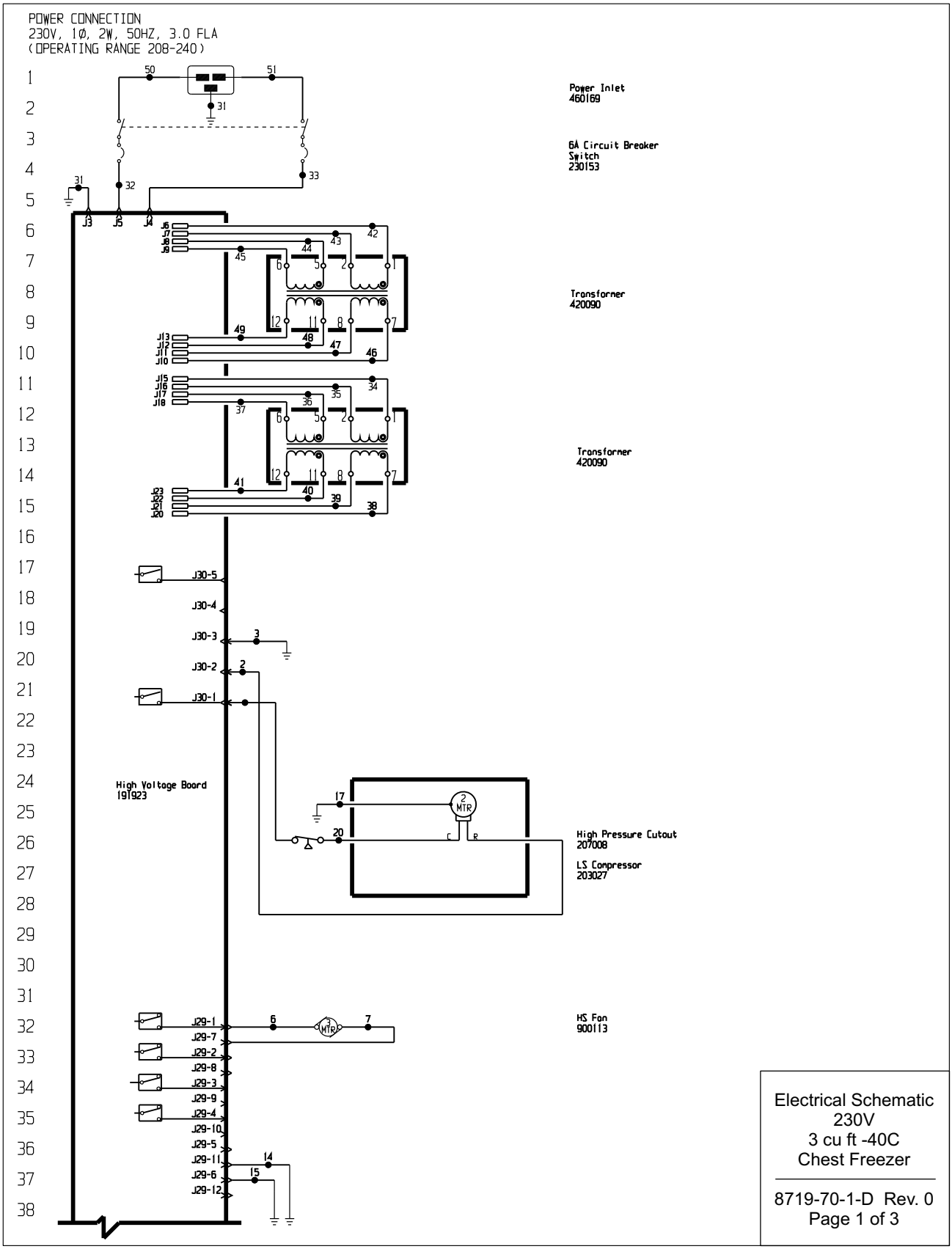
POWER CONNECTION
230V, 1Ø, 2W, 50HZ, 3.0 FLA
(OPERATING RANGE 208-240)
Power Inlet
460169
6A Circuit Breaker
Switch
230153
Transformer
420090
Transformer
420090
High Voltage Board
191923
High Pressure Cutout
207008
LS Compressor
203027
HS Fan
900113
J30-5
J30-4
J30-3
J30-2
J30-1
J29-1
J29-7
J29-2
J29-8
J29-3
J29-9
J29-4
J29-10
J29-5
J29-11
J29-6
J29-12
Electrical Schematic
230V
3 cu ft -40C
Chest Freezer
8719-70-1-D Rev. 0
Page 1 of 3

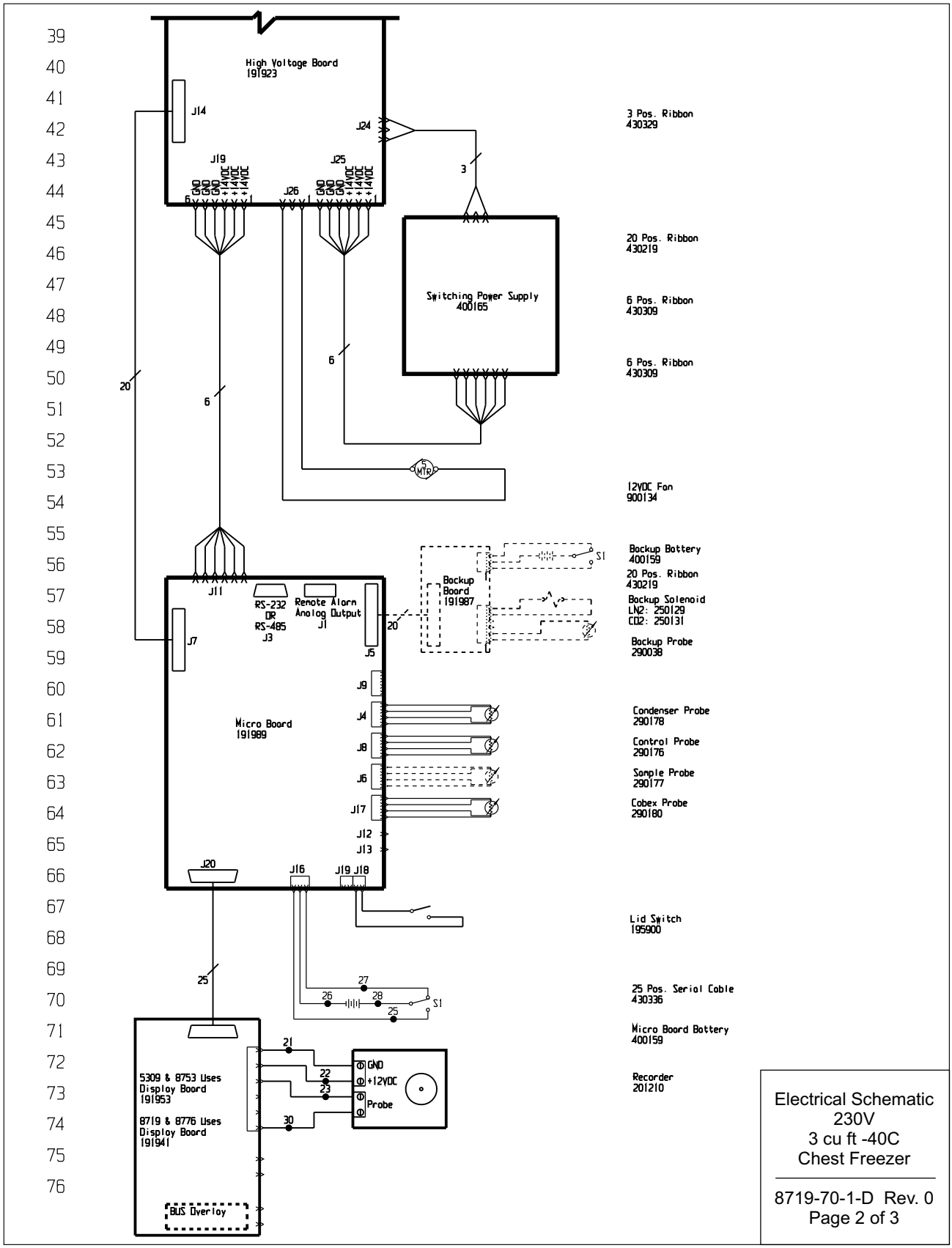
High Voltage Board
191923
J14
J24
J19
J25
J26
GND
+14VDC
3 Pos. Ribbon
430329
20 Pos. Ribbon
430219
Switching Power Supply
400165
6 Pos. Ribbon
430309
6 Pos. Ribbon
430309
MTR
12VDC Fan
900134
Backup Battery
400159
20 Pos. Ribbon
430219
Backup Solenoid
LN2: 250129
CO2: 250131
Backup Probe
290038
Backup Board
191987
S1
J11
RS-232
OR
RS-485
J3
Remote Alarm
Analog Output
J1
J7
J5
J9
J4
J8
J6
J17
J12
J13
J20
J16
J19 J18
Micro Board
191989
Condenser Probe
290178
Control Probe
290176
Sample Probe
290177
Cobex Probe
290180
Lid Switch
195900
25 Pos. Serial Cable
430336
Micro Board Battery
400159
Recorder
201210
5309 & 8753 Uses
Display Board
191953
8719 & 8776 Uses
Display Board
191941
BUS Overlay
GND
+12VDC
Probe
Electrical Schematic
230V
3 cu ft -40C
Chest Freezer
8719-70-1-D Rev. 0
Page 2 of 3

| WIRE # | COLOR | GAUGE | WIRE # | COLOR | GAUGE |
|---|---|---|---|---|---|
| 1 | BLK | 14 | 25 | WHT | 18 |
| 2 | RED | 14 | 26 | BLK | 18 |
| 3 | GRN/YEL | 14 | 27 | BLK | 18 |
| 4 | | | 28 | RED | 18 |
| 5 | | | 29 | | |
| 6 | BLK | 18 | 30 | RED | 18 |
| 7 | BLK | 18 | 31 | GRN/YEL | 14 |
| 8 | BLK | 18 | 32 | BLK | 14 |
| 9 | BLK | 18 | 33 | BLU | 14 |
| 10 | | | 34 | BLK | 14 |
| 11 | | | 35 | BLU | 14 |
| 12 | | | 36 | BLK | 14 |
| 13 | | | 37 | BLU | 14 |
| 14 | GRN/YEL | 18 | 38 | BLK | 14 |
| 15 | GRN/YEL | 18 | 39 | BLU | 14 |
| 16 | | | 40 | BLK | 14 |
| 17 | GRN/YEL | 14 | 41 | BLU | 14 |
| 18 | | | 42 | BLK | 14 |
| 19 | | | 43 | BLU | 14 |
| 20 | BLK | 14 | 44 | BLK | 14 |
| 21 | BLK | 18 | 45 | BLU | 14 |
| 22 | RED | 18 | 46 | BLK | 14 |
| 23 | BLK | 18 | 47 | BLU | 14 |
| 24 | | | 48 | BLK | 14 |
| | | | 49 | BLU | 14 |
| | | | 50 | BLK | 14 |
| | | | 51 | BLU | 14 |

3 CU.FT. CHEST MODELS
5309, 8719, 8753, 8776

1. Door switch shown in open position.
2. Battery switch shown in the OFF position.
3. Circuit breaker switch shown in OFF position.
4. Options and acessories shown in dashed lines.

SW3 SETTINGS

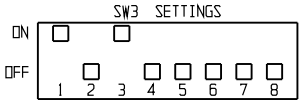


RS-232 SPECIFICATION

BAUD = 1200
PARITY = N
BITS = 8
STOP BITS = 2

| REMOTE CONTACTS/ANALOG OUTPUT |
|---|
| PIN# 1 Analog Output + |
| PIN# 2 Analog Output - |
| PIN# 3 Shield |
| PIN# 4 Shield |
| PIN# 5 Normally Closed |
| PIN# 6 Common. |
| PIN# 7 Normally Open |

CONTACT RATING: 1A @ 30V
CONTACTS IN ALARM STATE

| RS-232 PORT |
|---|
| PIN# 2 TXD |
| PIN# 3 RXD |
| PIN# 5 GND |

SW1 Settings for Analog Output

4-20mA Output

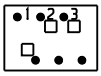


0-1V Output

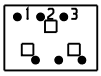


0-5V Output

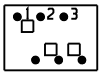


SW2 Settings for Communication Output

RS-485

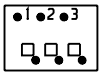


RS-232

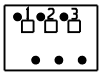


| REV | ECN NO. | DATE | BY | CAD | APPD | DESCRIPTION OF REVISION |
|---|---|---|---|---|---|---|
| 0 | FR-2202 | 05/03/11 | SRS | SAG | CCS | RELEASED FOR PRODUCTION / RELEASE 6 |

ATTENTION
OBSERVE PRECAUTIONS
ELECTROSTATIC
SENSITIVE DEVICES

THIS DOCUMENT CONTAINS PROPRIETARY INFORMATION AND SUCH INFORMATION IS NOT TO BE DISCLOSED TO OTHERS FOR ANY PURPOSE NOR USED FOR MANUFACTURING PURPOSES WITHOUT WRITTEN PERMISSION FROM THERMO FISHER SCIENTIFIC

ThermoFisher SCIENTIFIC
BOX 649, MARIETTA, OHIO 45750

MODEL/PART NAME: 3CF -40° CHEST FREEZER, 230V
DWG TITLE: ELECTRICAL SCHEMATIC
DWN: HCE | CAD: KDG | APPD: LDN | DATE: 10-10-10 | SCALE: NONE
MATERIAL:
PAINT COLOR:
TOLERANCE UNLESS OTHERWISE SPECIFIED
ANGLES: DECIMAL: .XX=± .XXX=±
DRAWING NUMBER 8719-70-1
SIZE D

Electrical Schematic
230V
3 cu ft -40C
Chest Freezer

8719-70-1-D Rev. 0
Page 3 of 3

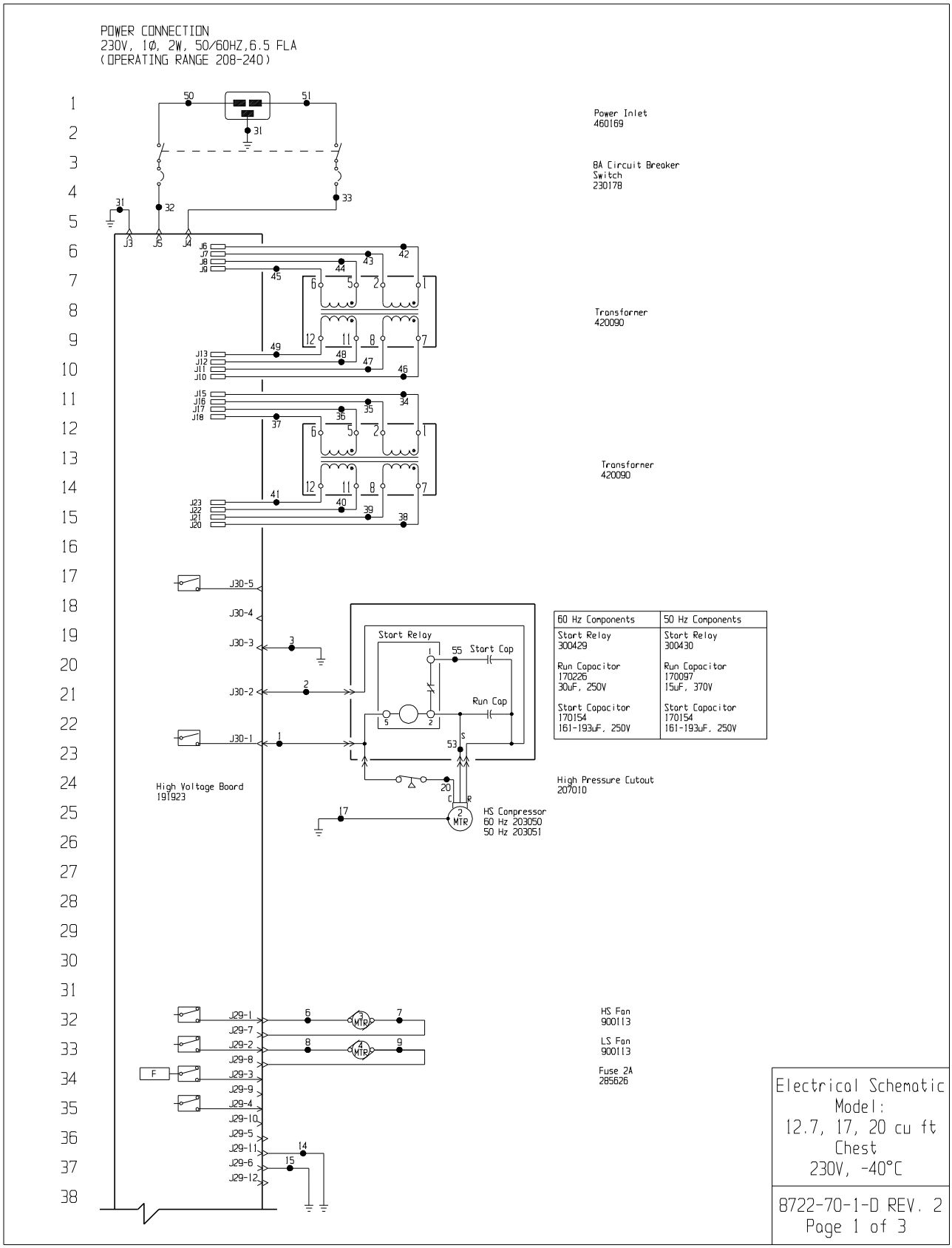


| 60 Hz Components | 50 Hz Components |
|---|---|
| Start Relay<br>300429 | Start Relay<br>300430 |
| Run Capacitor<br>170226<br>30uF, 250V | Run Capacitor<br>170097<br>15uF, 370V |
| Start Capacitor<br>170154<br>161-193uF, 250V | Start Capacitor<br>170154<br>161-193uF, 250V |

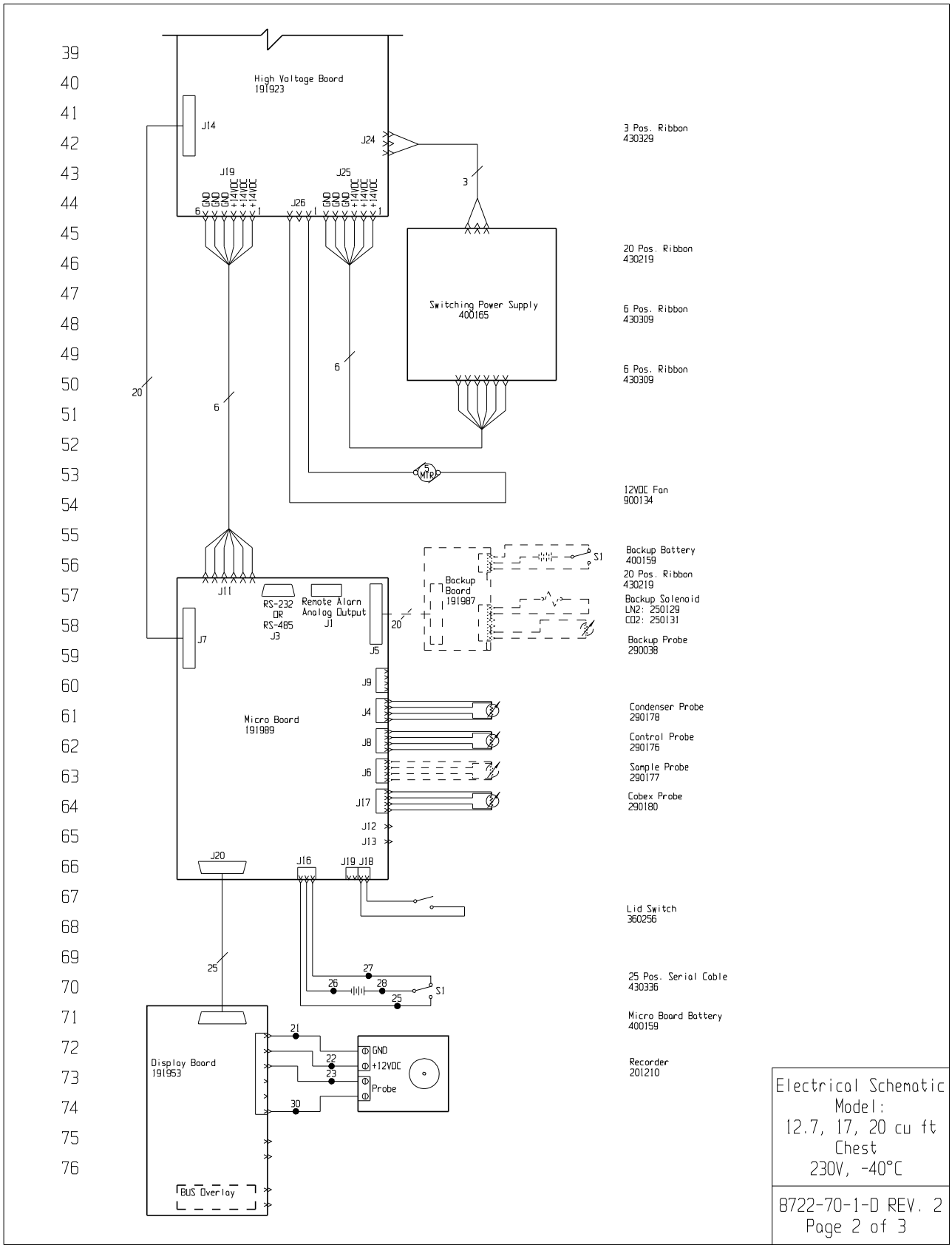
High Voltage Board
191923
J14
J24
J19
J25
J26
GND
+14VDC
3 Pos. Ribbon
430329
20 Pos. Ribbon
430219
Switching Power Supply
400165
6 Pos. Ribbon
430309
6 Pos. Ribbon
430309
MTR
12VDC Fan
900134
Backup Battery
400159
S1
20 Pos. Ribbon
430219
Backup Solenoid
LN2: 250129
CO2: 250131
Backup Probe
290038
Backup
Board
191987
J11
RS-232
OR
RS-485
J3
Remote Alarm
Analog Output
J1
J5
J7
J9
J4
J8
J6
J17
J12
J13
J20
J16
J19 J18
Micro Board
191989
Condenser Probe
290178
Control Probe
290176
Sample Probe
290177
Cobex Probe
290180
Lid Switch
360256
25 Pos. Serial Cable
430336
Micro Board Battery
400159
Recorder
201210
Display Board
191953
BUS Overlay
GND
+12VDC
Probe
Electrical Schematic
Model:
12.7, 17, 20 cu ft
Chest
230V, -40°C
8722-70-1-D REV. 2
Page 2 of 3

| WIRE # | COLOR | GAUGE | WIRE # | COLOR | GAUGE |
|---|---|---|---|---|---|
| 1 | BLK | 14 | 29 | | |
| 2 | RED | 14 | 30 | RED | 18 |
| 3 | GRN/YEL | 14 | 31 | GRN/YEL | 14 |
| 4 | | | 32 | BLK | 14 |
| 5 | | | 33 | BLU | 14 |
| 6 | BLK | 18 | 34 | BLK | 14 |
| 7 | BLK | 18 | 35 | BLU | 14 |
| 8 | BLK | 18 | 36 | BLK | 14 |
| 9 | BLK | 18 | 37 | BLU | 14 |
| 10 | | | 38 | BLK | 14 |
| 11 | | | 39 | BLU | 14 |
| 12 | | | 40 | BLK | 14 |
| 13 | | | 41 | BLU | 14 |
| 14 | GRN/YEL | 18 | 42 | BLK | 14 |
| 15 | GRN/YEL | 18 | 43 | BLU | 14 |
| 16 | | | 44 | BLK | 14 |
| 17 | GRN/YEL | 14 | 45 | BLU | 14 |
| 18 | | | 46 | BLK | 14 |
| 19 | | | 47 | BLU | 14 |
| 20 | BLK | 14 | 48 | BLK | 14 |
| 21 | BLK | 18 | 49 | BLU | 14 |
| 22 | RED | 18 | 50 | BLK | 14 |
| 23 | BLK | 18 | 51 | BLU | 14 |
| 24 | | | 52 | - | - |
| 25 | WHT | 18 | 53 | YEL | 14 |
| 26 | BLK | 18 | 54 | - | - |
| 27 | BLK | 18 | 55 | BLU | 14 |
| 28 | RED | 18 | | | |

CHEST MODELS:
12.7 CU.FT. - 5312, 5313, 8722, 8727, 8754, 8755, 8777, 8778
17 CU.FT. - 5319, 5322, 8731, 8733, 8758, 8759, 8781, 8782
20 CU.FT. - 5320, 5323, 8734, 8736, 8760, 8761, 8783, 8784

SW3 SETTINGS

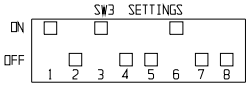


| REMOTE CONTACTS/ANALOG OUTPUT |
|---|
| PIN# 1 Analog Output + |
| PIN# 2 Analog Output - |
| PIN# 3 Shield |
| PIN# 4 Shield |
| PIN# 5 Normally Closed |
| PIN# 6 Common. |
| PIN# 7 Normally Open |

CONTACT RATING: 1A @ 30V
CONTACTS IN ALARM STATE

RS-232 SPECIFICATION

BAUD = 1200
PARITY = N
BITS = 8
STOP BITS = 2

| RS-232 PORT |
|---|
| PIN# 2 TXD |
| PIN# 3 RXD |
| PIN# 5 GND |

SW1 Settings for Analog Output

4-20mA Output

0-1V Output

0-5V Output

SW2 Settings for Communication Output

RS-485

RS-232

1. Door switch shown in open position.
2. Battery switch shown in the OFF position.
3. Circuit breaker switch shown in OFF position.
4. Options and acessories shown in doshed lines.

| REV | ECN NO. | DATE | BY | CAD | APPD | DESCRIPTION OF REVISION |
|---|---|---|---|---|---|---|
| 2 | FR-2386 | 07-27-12 | MAM | KDG | CCS | CHG. 300421 RELAY TO 300429, 300420 TO 300430 |
| 1 | FR-2267 | 10/26/11 | JWE | SAG | DRP | COMPRESSOR CHANGE / RELEASE 7 |
| 0 | FR-2202 | 05/03/11 | SRS | SAG | LDN | RELEASED FOR PRODUCTION / RELEASE 6 |

Electrical Schematic
Model:
12.7, 17, 20 cu ft
Chest
230V, -40°C

ATTENTION
OBSERVE PRECAUTIONS
ELECTROSTATIC
SENSITIVE DEVICES

THIS DOCUMENT CONTAINS PROPRIETARY INFORMATION AND SUCH INFORMATION IS NOT TO BE DISCLOSED TO OTHERS FOR ANY PURPOSE NOR USED FOR MANUFACTURING PURPOSES WITHOUT WRITTEN PERMISSION FROM THERMO FISHER SCIENTIFIC

MODEL/PART NAME: 12,17,20CF -40° CHEST FREEZERS, 230V
DWG TITLE: UNIT SCHEMATIC
DWN: HCE | CAD: KDG | APPD: LDN | DATE: 10-10-10 | SCALE: NONE

ThermoFisher SCIENTIFIC
BOX 649, MARIETTA, OHIO 45750

MATERIAL:
PAINT COLOR:
TOLERANCE UNLESS OTHERWISE SPECIFIED
ANGLES: DECIMAL: .XX=± .XXX=±
DRAWING NUMBER 8722-70-1
SIZE D

8722-70-1-D REV. 2
Page 3 of 3

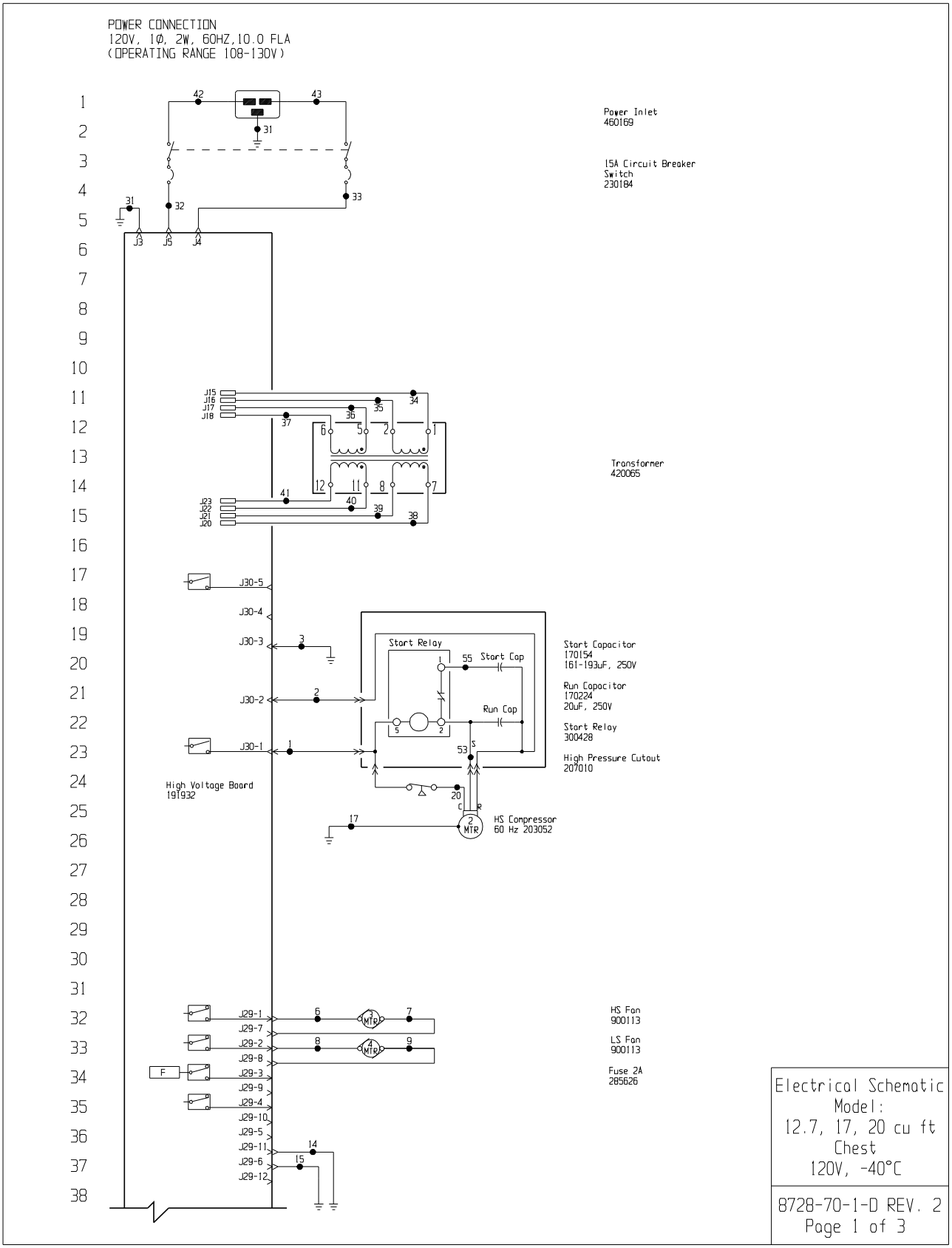
POWER CONNECTION
120V, 1Ø, 2W, 60HZ,10.0 FLA
(OPERATING RANGE 108-130V)
Power Inlet
460169
15A Circuit Breaker
Switch
230184
Transformer
420065
Start Relay
Start Cap
Run Cap
Start Capacitor
170154
161-193uF, 250V
Run Capacitor
170224
20uF, 250V
Start Relay
300428
High Pressure Cutout
207010
High Voltage Board
191932
HS Compressor
60 Hz 203052
HS Fan
900113
LS Fan
900113
Fuse 2A
285626
Electrical Schematic
Model:
12.7, 17, 20 cu ft
Chest
120V, -40°C
8728-70-1-D REV. 2
Page 1 of 3

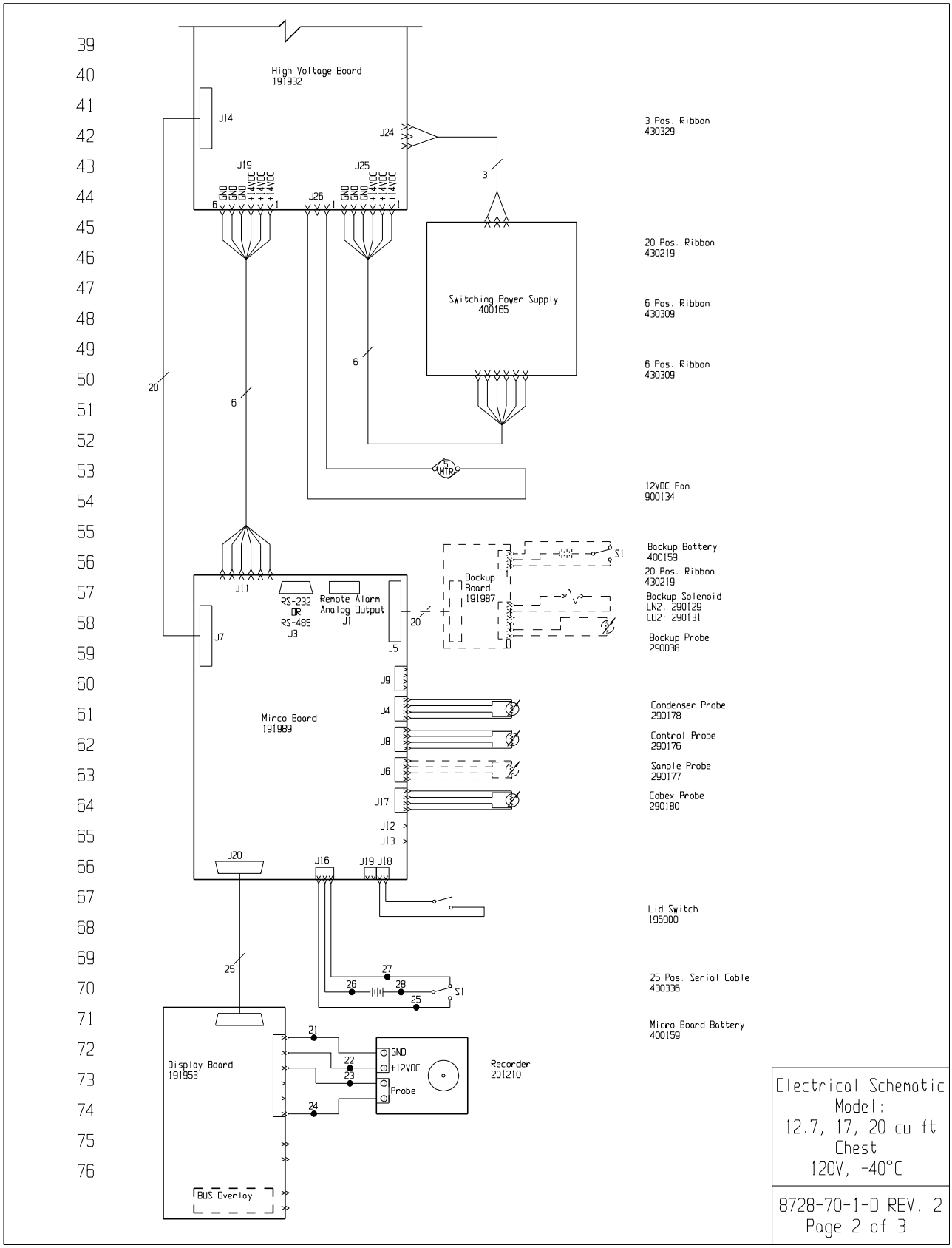
High Voltage Board
191932
J14
J24
J19
J25
J26
GND
+14VDC
3 Pos. Ribbon
430329
20 Pos. Ribbon
430219
Switching Power Supply
400165
6 Pos. Ribbon
430309
6 Pos. Ribbon
430309
MTR
12VDC Fan
900134
Backup Battery
400159
20 Pos. Ribbon
430219
Backup Board
191987
Backup Solenoid
LN2: 290129
CO2: 290131
Backup Probe
290038
J11
RS-232
OR
RS-485
J3
Remote Alarm
Analog Output
J1
J7
J5
J9
J4
J8
J6
J17
J12
J13
Mirco Board
191989
Condenser Probe
290178
Control Probe
290176
Sample Probe
290177
Cobex Probe
290180
J20
J16
J19 J18
Lid Switch
195900
25 Pos. Serial Cable
430336
Micro Board Battery
400159
Display Board
191953
BUS Overlay
GND
+12VDC
Probe
Recorder
201210
Electrical Schematic
Model:
12.7, 17, 20 cu ft
Chest
120V, -40°C
8728-70-1-D REV. 2
Page 2 of 3

| WIRE # | COLOR | GAUGE | WIRE # | COLOR | GAUGE |
|---|---|---|---|---|---|
| 1 | BLK | 14 | 29 | | |
| 2 | RED | 14 | 30 | | |
| 3 | GRN/YEL | 14 | 31 | GRN/YEL | 14 |
| 4 | | | 32 | BLK | 14 |
| 5 | | | 33 | BLU | 14 |
| 6 | BLK | 18 | 34 | BLK | 14 |
| 7 | BLK | 18 | 35 | BLU | 14 |
| 8 | BLK | 18 | 36 | BLK | 14 |
| 9 | BLK | 18 | 37 | BLU | 14 |
| 10 | | | 38 | BLK | 14 |
| 11 | | | 39 | BLU | 14 |
| 12 | | | 40 | BLK | 14 |
| 13 | | | 41 | BLU | 14 |
| 14 | GRN/YEL | 18 | 42 | BLK | 14 |
| 15 | GRN/YEL | 18 | 43 | BLU | 14 |
| 16 | | | 44 | - | - |
| 17 | GRN/YEL | 14 | 45 | - | - |
| 18 | | | 46 | - | - |
| 19 | | | 47 | - | - |
| 20 | BLK | 14 | 48 | - | - |
| 21 | BLK | 18 | 49 | - | - |
| 22 | RED | 18 | 50 | - | - |
| 23 | BLK | 18 | 51 | - | - |
| 24 | RED | 18 | 52 | - | - |
| 25 | WHT | 18 | 53 | YEL | - |
| 26 | BLK | 18 | 54 | - | - |
| 27 | BLK | 18 | 55 | BLU | - |
| 28 | RED | 18 | | | |

CHEST MODELS:
12.7 CU.FT. - 5315, 8728, 8756, 8779
17 CU.FT. - 5318, 8730, 8757, 8780
20 CU.FT. - 5321, 8737, 8762, 8785

SW3 SETTINGS

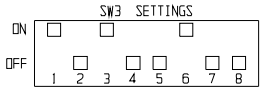


| REMOTE CONTACTS/ANALOG OUTPUT | |
|---|---|
| PIN# 1 | Analog Output + |
| PIN# 2 | Analog Output - |
| PIN# 3 | Not Connected |
| PIN# 4 | Not Connected |
| PIN #5 | Normally Closed |
| PIN# 6 | Common |
| PIN# 7 | Normally Open |

CONTACT RATING: 1A @ 30V
CAONTACTS IN ALARM STATE

RS-232 SPECIFICATION

BAUD = 1200
PARITY = N
BITS = 8
STOP BITS = 2

| RS-232 PORT | |
|---|---|
| PIN# 2 | TXD |
| PIN# 3 | RXD |
| PIN# 5 | GND |

SW1 Settings for Analog Output

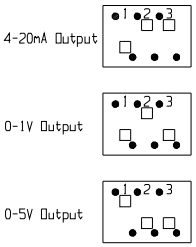


SW2 Settings for Communication Output

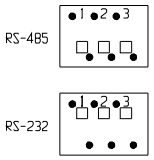


1. Door switch shown in open position.
2. Battery switch shown in the OFF position.
3. Circuit breaker switch shown in OFF position.
4. Options and acessories shown in doshed lines.

| REV | ECN NO. | DATE | BY | CAD | APPD | DESCRIPTION OF REVISION |
|---|---|---|---|---|---|---|
| 2 | FR-2386 | 07-27-12 | MAM | KDG | CCS | CHG. 300421 START RELAY TO 300428 |
| 1 | FR-2267 | 10/26/11 | JWE | SAG | DRP | COMPRESSOR CHANGE / RELEASE 7 |
| 0 | FR-2202 | 05/03/11 | SRS | SAG | LDN | RELEASED FOR PRODUCTION / RELEASE 6 |

THIS DOCUMENT CONTAINS PROPRIETARY INFORMATION AND SUCH INFORMATION IS NOT TO BE DISCLOSED TO OTHERS FOR ANY PURPOSE NOR USED FOR MANUFACTURING PURPOSES WITHOUT WRITTEN PERMISSION FROM THERMO FISHER SCIENTIFIC

MODEL/PART NAME: 12,17,20CF -40° CHEST FREEZERS, 120V
DWG TITLE: UNIT SCHEMATIC
DWN: HCE | CAD: KDG | APPD: LDN | DATE: 10-10-10 | SCALE: NONE
MATERIAL:
PAINT COLOR:
TOLERANCE UNLESS OTHERWISE SPECIFIED
ANGLES: DECIMAL: .XX=± .XXX=±
DRAWING NUMBER 8728-70-1
SIZE D

Electrical Schematic
Model:
12.7, 17, 20 cu ft
Chest
120V, -40°C

8728-70-1-D REV. 2
Page 3 of 3

ATTENTION
OBSERVE PRECAUTIONS
ELECTROSTATIC
SENSITIVE DEVICES

Thermo Fisher SCIENTIFIC
BOX 649, MARIETTA, OHIO 45750

# THERMO FISHER SCIENTIFIC FREEZER WARRANTY

The Warranty Period starts two weeks from the date your equipment is shipped from our facility. This allows for shipping time so the warranty will go into effect at approximately the same time your equipment is delivered. The warranty protection extends to any subsequent owner during the warranty period.

During the first two years of the warranty period, component parts proven to be non-conforming in materials or workmanship will be repaired or replaced at Thermo's expense, labor included. The ULT Freezers include an additional two year warranty on the compressors, parts only, F.O.B. factory. Installation and calibration is not covered by this warranty agreement. The Technical Services Department must be contacted for warranty determination and direction prior to any work being performed. Expendable items, i.e., glass, filters, pilot lights, light bulbs and door gaskets are excluded from this warranty.

In addition to the standard warranty, the foamed-in-place cabinet design carries a unit production lifetime warranty (foamed-in-place cabinet, evaporator and foamed-in-place door; parts only). Please contact your sales representative or Thermo for additional information.

Replacement or repair of component parts or equipment under this warranty shall not extend the warranty to either the equipment or to the component part beyond the original two year warranty period. The Technical Services Department must give prior approval for the return of any components or equipment.

THIS WARRANTY IS EXCLUSIVE AND IN LIEU OF ALL OTHER WARRANTIES, WHETHER WRITTEN, ORAL, OR IMPLIED. NO WARRANTIES OF MERCHANTABILITY OR FITNESS FOR A PARTICULAR PURPOSE SHALL APPLY. Thermo shall not be liable for any indirect or consequential damages including, without limitation, damages relating to lost profits or loss of products.

Your local Thermo Sales Office is ready to help with comprehensive site preparation information before your equipment arrives. Printed instruction manuals carefully detail equipment installation, operation, and preventive maintenance.

If equipment service is required, please call your Technical Services Department at 1-800-438-4851 (USA and Canada) or 1-740-373-4763. We're ready to answer your questions on equipment warranty, operation, maintenance, service, and special applications. Outside the USA, contact your local distributor for warranty information.

Rev. 0 6/11

ISO 9001 REGISTERED

# THERMO FISHER SCIENTIFIC FREEZER INTERNATIONAL DEALER WARRANTY

The Warranty Period starts two months from the date your equipment is shipped from our facility. This allows for shipping time so the warranty will go into effect at approximately the same time your equipment is delivered. The warranty protection extends to any subsequent owner during the warranty period. Dealers who stock our equipment are allowed an additional four months for delivery and installation, providing the warranty card is completed and returned to the Technical Services Department.

During the first two years of the warranty period, component parts proven to be non-conforming in materials or workmanship will be repaired or replaced at Thermo's expense, labor excluded. The ULT Freezers include an additional two year warranty on the compressors, parts only, F.O.B. factory. Installation and calibration is not covered by this warranty agreement. The Technical Services Department must be contacted for warranty determination and direction prior to any work being performed. Expendable items, i.e., glass, filters, pilot lights, light bulbs and door gaskets are excluded from this warranty.

In addition to the standard warranty, the foamed-in-place cabinet design carries a unit production lifetime warranty (foamed-in-place cabinet, evaporator and foamed-in-place door; parts only). Please contact your sales representative or Thermo for additional information.

Replacement or repair of component parts or equipment under this warranty shall not extend the warranty to either the equipment or to the component part beyond the original two year warranty period. The Technical Services Department must give prior approval for the return of any components or equipment.

THIS WARRANTY IS EXCLUSIVE AND IN LIEU OF ALL OTHER WARRANTIES, WHETHER WRITTEN, ORAL, OR IMPLIED. NO WARRANTIES OF MERCHANTABILITY OR FITNESS FOR A PARTICULAR PURPOSE SHALL APPLY. Thermo shall not be liable for any indirect or consequential damages including, without limitation, damages relating to lost profits or loss of products.

Your local Thermo Sales Office is ready to help with comprehensive site preparation information before your equipment arrives. Printed instruction manuals carefully detail equipment installation, operation, and preventive maintenance.

If equipment service is required, please contact your local distributor or Thermo (1-800-438-4851 in USA and Canada, or 1-740-373-4763). We're ready to answer your questions on equipment warranty, operation, maintenance, service, and special applications. Outside the USA, contact your local distributor for warranty information.

Rev. 0 6/11

ISO 9001 REGISTERED

# Appendix A Handling Liquid Nitrogen

**Warning** Contact of liquid nitrogen or cold gas with the skin or eyes may cause serious freezing (frostbite) injury. ▲

**Handle liquid nitrogen carefully.**

The extremely low temperature can freeze human flesh very rapidly. When spilled on a surface the liquid tends to cover it completely and intimately, cooling a large area. The gas issuing from the liquid is also extremely cold. Delicate tissue, such as that of the eyes, can be damaged by an exposure to the cold gas which would be too brief to affect the skin of the hands or face.

**Never allow any unprotected part of your body to touch objects cooled by liquid nitrogen.**

Such objects may stick fast to the skin and tear the flesh when you attempt to free yourself. Use tongs to withdraw objects immersed in the liquid, and handle the object carefully.

**Wear protective clothing.**

Protect your eyes with a face shield or safety goggles (safety glasses without side shields do not give adequate protection). Always wear gloves when handling anything that is, or may have been, in immediate contact with liquid nitrogen. Insulated gloves are recommended, but heavy leather gloves may also be used. The gloves should fit loosely, so that they can be thrown off quickly if liquid should splash into them. When handling liquid in open containers, it is advisable to wear high-top shoes. Trousers (which should be cuffless if possible) should be worn outside the shoes.

## Introduction

The safe handling and use of liquid nitrogen in cryogenic refrigerators and dewar flasks is largely a matter of knowing the potential hazards and using common-sense procedures based on that knowledge. There are two important properties of liquid nitrogen that present potential hazards:

1. It is extremely cold. At atmospheric pressure, liquid nitrogen boils at -320°F (-196°C).

2. Very small amounts of liquid vaporize into large amounts of gas. One liter of liquid nitrogen becomes 24.6 cu. ft. (700l) of gas.

The safety precautions in this booklet must be followed to avoid potential injury or damage which could result from these two characteristics. Do not attempt to handle liquid nitrogen until you read and fully understand the potential hazards, their consequences, and the related safety precautions. Keep this booklet handy for ready reference and review.

**Note** Because argon is an inert gas whose physical properties are very similar to those of nitrogen, precautions and safe practices for the handling and use of liquid argon are the same as those for liquid nitrogen. ▲

**Use only containers designed for low temperature liquids.**

Cryogenic containers are specifically designed and made of materials that can withstand the rapid changes and extreme temperature differences encountered in working with liquid nitrogen. Even these special containers should be filled SLOWLY to minimize the internal stresses that occur when any material is cooled. Excessive internal stresses can damage the container.

**Do not cover or plug the entrance opening of any liquid nitrogen refrigerator or dewar. Do not use any stopper or other device that would interfere with venting of gas.**

These cryogenic liquid containers are generally designed to operate with little or no internal pressure. Inadequate venting can result in excessive gas pressure which could damage or burst the container. Use only the loose-fitting necktube core supplied or one of the approved accessories for closing the necktube. Check the unit periodically to be sure that venting is not restricted by accumulated ice or frost.

**Use proper transfer equipment.**

Use a phase separator or special filling funnel to prevent splashing and spilling when transferring liquid nitrogen into or from a dewar or refrigerator. The top of the funnel should be partly covered to reduce splashing. Use only small, easily-handled dewars for pouring liquid. For the larger, heavier containers, use a cryogenic liquid withdrawal device to transfer liquid from one container to another. Be sure to follow instructions supplied with the withdrawal device. When liquid cylinders or other large storage containers are used for filling, follow the instructions supplied with those units and their accessories.

**Do not overfill containers.**

Filling above the bottom of the necktube (or specified maximum level) can result in overflow and spillage of liquid when the necktube core or cover is placed in the opening.

**Never use hollow rods or tubes as dipsticks.**

When a warm tube is inserted into liquid nitrogen, liquid will spout from the top of the tube due to gasification and rapid expansion of liquid inside the tube.

**Warning** Nitrogen gas can cause suffocation without warning! ▲

**Store and use liquid nitrogen only in a well-ventilated place.**

As the liquid evaporates, the resulting gas tends to displace the normal air from the area. In closed areas, excessive amounts of nitrogen gas reduce the concentration of oxygen and can result in asphyxiation. Because nitrogen gas is colorless, odorless and tasteless, it cannot be detected by the human senses and will be breathed as if it were air. Breathing an atmosphere that contains less than 18% oxygen can cause dizziness and quickly result in unconsciousness and death.

**Note** The cloudy vapor that appears when liquid nitrogen is exposed to the air is condensed moisture; not the gas itself. The issuing gas is invisible. ▲

**Never dispose of liquid nitrogen in confined areas or places where others may enter.**

Disposal of liquid nitrogen should be performed outdoors in a safe place. Pour the liquid slowly on gravel or bare earth where it can evaporate without causing damage. Do not pour the liquid on pavement.

# Appendix B Handling Liquid $CO_2$

**Warning** High concentrations of $CO_2$ gas can cause asphyxiation! OSHA Standards specify that employee exposure to carbon dioxide in any eight-hour shift of a 40-hour work week shall not exceed the eight-hour time weighted average of 5000 PPM (0.5% $CO_2$). The short term exposure limit for 15 minutes or less is 30,000 PPM (3% $CO_2$). Carbon dioxide monitors are recommended for confined areas where concentrations of carbon dioxide gas can accumulate. ▲

**Store and use liquid $CO_2$ only in a well-ventilated place.**

As the liquid evaporates, the resulting gas tends to displace the normal air from the area. In closed areas, excessive amounts of $CO_2$ gas reduce the concentration of oxygen and can result in asphyxiation. Because $CO_2$ gas is colorless, odorless and tasteless, it cannot be detected by the human senses and will be breathed as if it were air. Breathing an atmosphere that contains less than 18% oxygen can cause dizziness and quickly result in unconsciousness and death.

**Note** The cloudy vapor that appears when liquid $CO_2$ is exposed to the air is condensed moisture; not the gas itself. The issuing gas is invisible. ▲

**Never dispose of liquid $CO_2$ in confined areas or places where others may enter.**

Disposal of liquid $CO_2$ should be done outdoors in a safe place. Pour the liquid slowly on gravel or bare earth where it can evaporate without causing damage. Do not pour the liquid on pavement.

# Appendix C First Aid

If a person seems to become dizzy or loses consciousness while working with liquid nitrogen or carbon dioxide, move to a well-ventilated area immediately. If breathing has stopped, apply artificial respiration. If breathing is difficult, give oxygen. Call a physician. Keep warm and at rest.

If exposed to liquid or cold gas, restore tissue to normal body temperature (98.6°F) as rapidly as possible, followed by protection of the injured tissue from further damage and infection. Remove or loosen clothing that may constrict blood circulation to the frozen area. Call a physician. Rapid warming of the affected part is best achieved by using water at 108°F. Under no circumstance should the water be over 112°F, nor should the frozen part be rubbed either before or after rewarming. The patient should neither smoke nor drink alcohol.

# CE Declaration of Conformity

**Manufacturer:** Thermo Fisher Scientific (Asheville) LLC
401 Millcreek Road
Marietta, Ohio 45750
U.S.A.

hereby declares under its sole responsibility that the following product(s)

**Product Description:** Herafreeze® ULT -40°C Chest Freezer

| Cat. No. | Model No. | Release Level(s) | Year of Initial Marking |
|---|---|---|---|
| HFC350TA | 8752 | 6 | 2011 |
| HFC350TV | 8753 | 6 | 2011 |
| HFC1350TV | 8754 | 6 & 7 | 2011 |
| HFC1350TD | 8755 | 6 & 7 | 2011 |
| HFC1350TA | 8756 | 6 & 7 | 2011 |
| HFC1750TA | 8757 | 6 & 7 | 2011 |

| Cat. No. | Model No. | Release Level(s) | Year of Initial Marking |
|---|---|---|---|
| HFC1750TV | 8758 | 6 & 7 | 2011 |
| HFC1750TD | 8759 | 6 & 7 | 2011 |
| HFC2050TV | 8760 | 6 & 7 | 2011 |
| HFC2050TD | 8761 | 6 & 7 | 2011 |
| HFC2050TA | 8762 | 6 & 7 | 2011 |

(Release Level [REL#] shown on Serial Tag)

This product conforms to the following European Union Directive(s):

**EMC:** 2004/108/EC
**LVD:** 2006/95/EC

This product conforms to the following Harmonized, International and National Standards:

| **EMC:** | **LVD:** |
|---|---|
| EN 61326-1:2006 | EN 61010-1 2nd Edition |
| EN 61000-3-2 | EN 60335-2-34 (applicable sections) |
| EN 61000-3-3 | CSA C22.2 No. 61010-1 2nd Edition |
| | UL 61010-1 2nd Edition |

Mark Bartlett 24 January 2012
Mark Bartlett
Supervisor, EPD
ThermoFisher SCIENTIFIC

Rev. 2

# CE Declaration of Conformity

**Manufacturer:** Thermo Fisher Scientific (Asheville) LLC
401 Millcreek Road
Marietta, Ohio 45750
U.S.A.

hereby declares under its sole responsibility that the following product(s)

**Product Description:** Herafreeze® ULT -86°C Chest Freezer

| Cat. No. | Model No. | Release Level(s) | Year of Initial Marking |
|---|---|---|---|
| HFC390TA | 8739 | 6 | 2011 |
| HFC390TV | 8740 | 6 | 2011 |
| HFC1390TD | 8742 | 6 & 7 | 2011 |
| HFC1390TV | 8743 | 6 & 7 | 2011 |
| HFC1390TA | 8744 | 6 & 7 | 2011 |
| HFC1790TA | 8745 | 6 & 7 | 2011 |

| Cat. No. | Model No. | Release Level(s) | Year of Initial Marking |
|---|---|---|---|
| HFC1790TV | 8746 | 6 & 7 | 2011 |
| HFC1790TD | 8747 | 6 & 7 | 2011 |
| HFC2090TV | 8749 | 6 & 7 | 2011 |
| HFC2090TD | 8750 | 6 & 7 | 2011 |
| HFC2090TA | 8751 | 6 & 7 | 2011 |

(Release Level [REL#] shown on Serial Tag)

This product conforms to the following European Union Directive(s):

**EMC:** 2004/108/EC
**LVD:** 2006/95/EC

This product conforms to the following Harmonized, International and National Standards:

| **EMC:** | **LVD:** |
|---|---|
| EN 61326-1:2006 | EN 61010-1 2nd Edition |
| EN 61000-3-2 | EN 60335-2-34 (applicable sections) |
| EN 61000-3-3 | CSA C22.2 No. 61010-1 2nd Edition |
| | UL 61010-1 2nd Edition |

Mark Bartlett 24 January 2012
Mark Bartlett
Supervisor, EPD
ThermoFisher SCIENTIFIC

Rev. 2

Thermo Fisher Scientific
401 Millcreek Road
Marietta, Ohio 45750
USA

www.thermofisher.com