Technical Data Sheet

VWR® Ultra-Low Temperature Freezer

Upright Model Release - 81

VWR International, LLC, 100 Matsonford Rd, Radnor, PA 19087

Catalogue Number / Model Number
76307-938 / VWR50086FD

Application, Rating and Electrical Data

Application	Storage of General (non-flammable) Laboratory Materials
Storage Volume	24.1 cu. ft. (682 liters), 500 Standard 2" Boxes
Temperature Rating	-50°C to -86°C
Electrical Power	208-230V, 60 Hz, 1 Phase
Instrument Rated Current	5.0 AMP
Building Supply Rating	15.0A (min) dedicated grounded circuit
Power Plug / Power Cord	NEMA 6-15P / IEC Cords, 10 ft (3.05 m)
Agency Listings	UL, cUL
Application Environment	Non-Corrosive, Non-Flammable, Non-Explosive
	Indoor Use Only, Ventilated 15° C - 32° C (59° F - 90° F)

Typical Performance Characteristics in 20 °C Ambient

Energy Consumption (kW-hr/day)	12.5
Heat Rejection Rate (Btu/hr)	1776
Peak Variation from Setpoint (°C)	+4.4 / -2.8
Sound (dBa)	50.5
1-min Door Opening Recovery to -75°C (min)	20
Average Uniformity at -80°C (°C)	4.6
Average Stability at -80°C (°C)	2.7
Pull Down Time (to -80°C) (hrs)	7.5
Warm Up Time (-80°C to -50°C) (min)	255

Dimensions and Construction

Interior Dimensions (H x D x W)	51.2 x 28.3 x 28.8 in. (1300 x 719 x 732 mm)
Exterior Dimensions (H x D x W)	78 x 38.4 x 38 in. (1981 x 975 x 965 mm)
Shipping Dimensions	83.12 x 42.75 x 41.88 in. (2111 x 1086 x 1064 mm)
Shipping Weight / Net Weight	734 lbs. (333 kg) / 640 lbs. (290 kg)
Insulation	Vacuum Insulation Panels with High-Density Water-Blown Polyurethane Foam
Door Seal	Silicone-Based Gasket Seal with Electrical Door Perimeter Heater
Shelves	3 Stainless Steel Adjustable Shelves in 1" (25mm) Increments
Shelf Capacity	Max. Capacity per Shelf: 205 lbs. (91.7 kg)
Interior / Exterior Material	Painted Steel (Stainless Steel Option) / Painted Steel
All-Direction Casters	Standard with Locks
Other Options	LN2 or CO2 Backup System, Chart Recorder

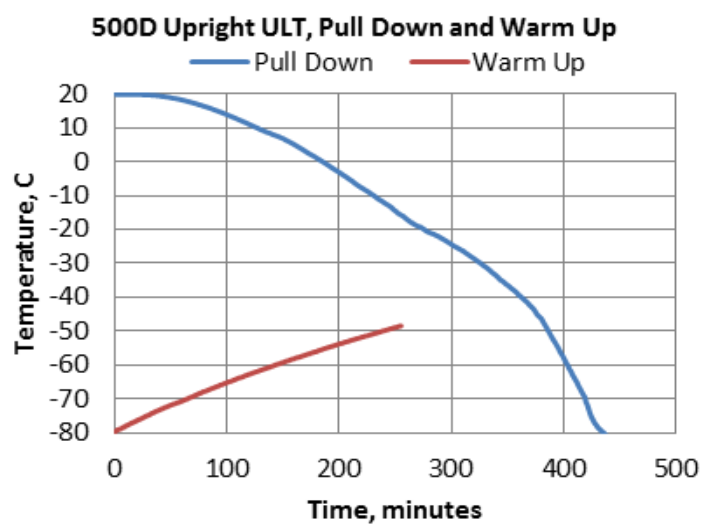

Electrical System Configuration

Controller Level	Top
Power Switch	(Rear) Main Circuit Breaker
Controller Type	7-segment Display with Capacitive Touch Screen Buttons
Setpoint Security	Yes
Compressor Safe Guard	High Temp Cutout Switch, Current, Logic protection
Control Sensor	Single RTD (1000 ohm Platinum RTD)
Connectivity / Remote Outputs	RS485/4-20mA output/Dry Contacts
Adjustable Warm/Cold Alarms	Fully Adjustable

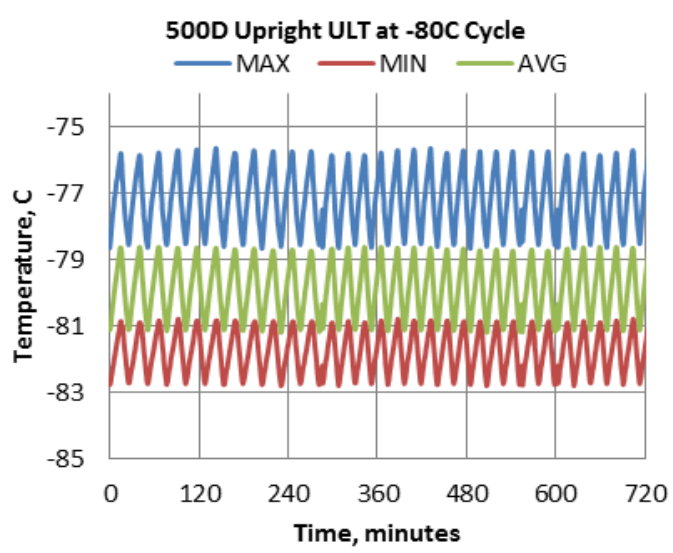

Refrigeration Configuration

Refrigeration System	Two Stage Cascade System
Compressor/Number	Industrial Rated, Hermetically Sealed / 2
Compressor Capacity*	506 W
Condenser Type	Enhanced Micro-Channel and Forced-Air Cooled
Expansion Device	Capillary Tube
Evaporator Type	Enhanced Cold Wall Design
Defrost Method	Manual Defrost
Refrigerant (1st/2nd Stage)	R290 / R170+R290 Mix
Environmental Effects	GWP: 3 (R290) , 6 (R170) ODP: 0 (R290); 0 (R170)
Flammable	Yes

1) Performance is nominal and individual units may vary.
2) Freezer performance will differ due to product amount, product size and operating conditions.
3) Continuous product enhancements may, without notice, result in amendments or omissions to this specification. VWR International, LLC cannot accept responsibility for damage, injury, loss or expenses resulting from misapplication of the information herein.

* Manufacturer measured compressor capacity taken at standard -35°C/45°C (Evap/Cond) condition.

© 2019 Avantor, Inc. All rights reserved. Trademarks are owned by Avantor, Inc. or its affiliates, unless otherwise noted. Specifications, terms and pricing are subject to change.
Not all products are available in all countries. Please consult your local sales representative for details.

DOOR OPEN @ 180°

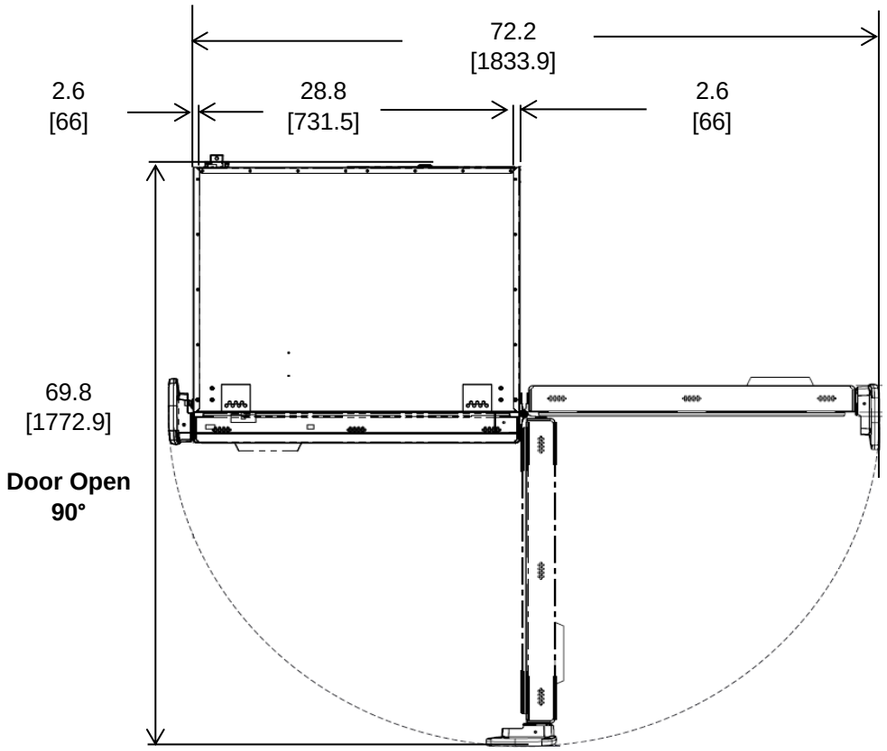

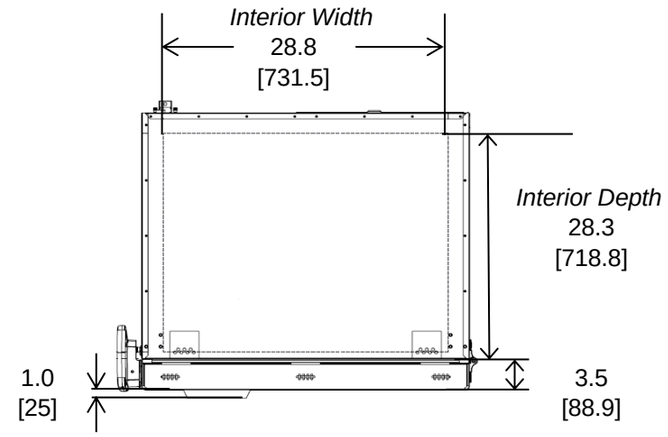

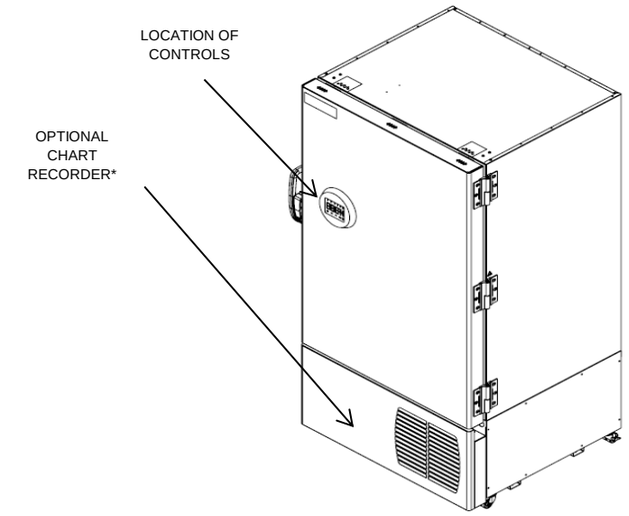

*Chart recorders are stand alone on 300/400 models

*Backup systems are stand alone on 300 models.

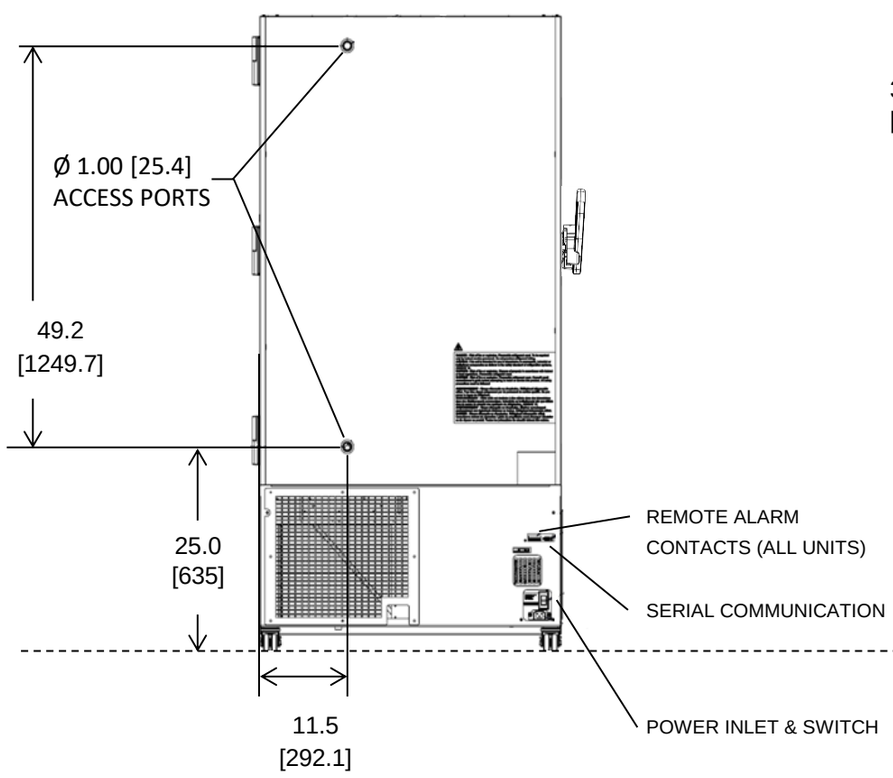

BACK

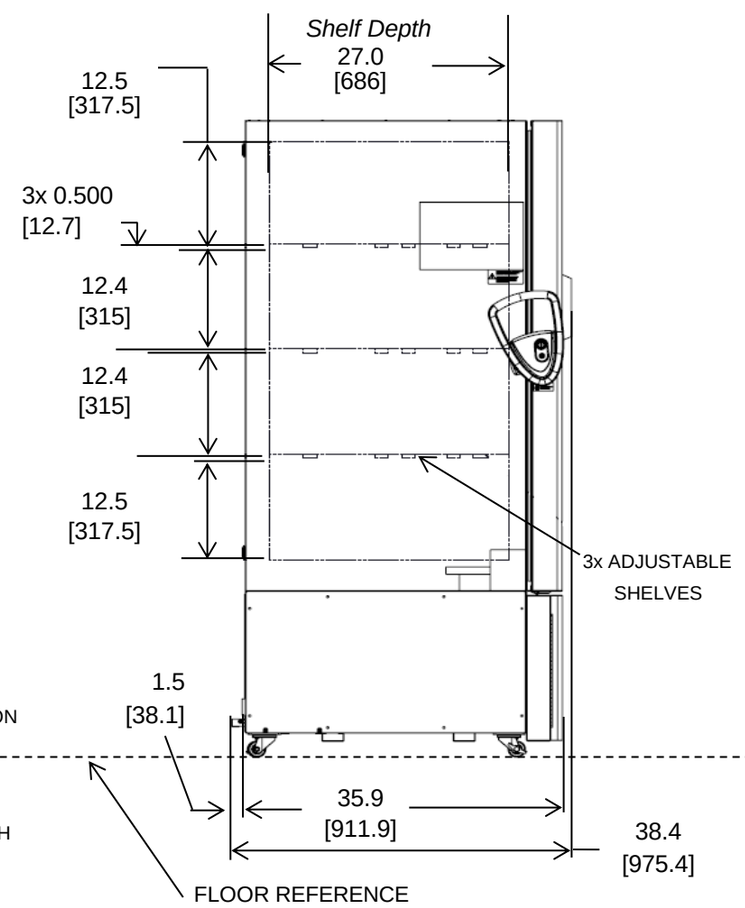

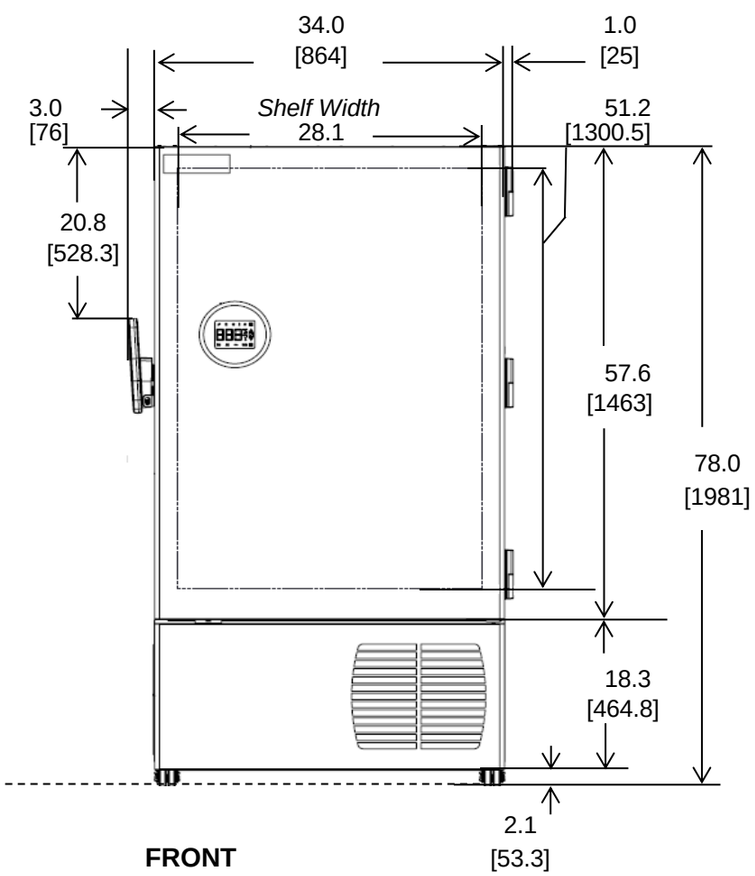

FRONT

NOTE: DUAL DIMENSION IS INCH OVER METRIC

DO NOT USE FOR ENGINEERING PURPOSES. SUBJECT TO CHANGE WITHOUT NOTICE.

24.1 cuft Upright Freezer

4 Inner Doors

Single Outer Door

Top Mount Controls