Thermo Forma

8600 Series

Ultra Low Temperature
Upright Freezers

Operating and Maintenance Manual

Manual No: 7008602 Rev. 0

Read This Instruction Manual.

Failure to read, understand and follow the instructions in this manual may result in damage to the unit, injury to operating personnel, and poor equipment performance.

CAUTION! All internal adjustments and maintenance must be performed by qualified service personnel.

Refer to the serial tag on the back of this manual.

The material in this manual is for information purposes only. The contents and the product it describes are subject to change without notice. Thermo Forma makes no representations or warranties with respect to this manual. In no event shall Thermo Forma be held liable for any damages, direct or incidental, arising out of or related to the use of this manual.

Models	Capacity in Cubic Feet	Voltage
8602	13	230
8603	13	120
8604	17	120
8605	17	230
8606	23	230
8607	28	230
Double Door Units		
8691	13	230
8692	13	120
8693	17	120
8694	17	230
8695	23	230
Red Cell Storage		
8627	13	230

MANUAL NUMBER 7008602

REV	ECR/ECN	DATE	DESCRIPTION	By
0	--	1/10/03	Original Manual	aks

Important operating and/or maintenance instructions. Read the accompanying text carefully.

Potential electrical hazards. Only qualified persons should perform procedures associated with this symbol.

Hot surface(s) present which may cause burns to unprotected skin or to materials which may be damaged by elevated temperatures

Extreme temperature hazards, hot or cold. Use special handling equipment or wear special, protective clothing.

- √ Always use the proper protective equipment (clothing, gloves, goggles, etc.)
- √ Always dissipate extreme cold or heat and wear protective clothing.
- √ Always follow good hygiene practices.
- √ Each individual is responsible for his or her own safety.

Do You Need Information or Assistance on Thermo Forma Products?

If you do, please contact us 8:00 a.m. to 6:00 p.m. (Eastern Time) at:

1-740-373-4763	Direct
1-888-213-1790	Toll Free, U.S. and Canada
1-740-373-4189	FAX
http://www.thermoforma.com	Internet Worldwide Web Home Page
service@thermoforma.com	Service E-Mail Address

Our **Sales Support** staff can provide information on pricing and give you quotations. We can take your order and provide delivery information on major equipment items or make arrangements to have your local sales representative contact you. Our products are listed on the Internet and we can be contacted through our Internet home page.

Our **Service Support** staff can supply technical information about proper setup, operation or troubleshooting of your equipment. We can fill your needs for spare or replacement parts or provide you with on-site service. We can also provide you with a quotation on our Extended Warranty for your Thermo Forma products.

Whatever Thermo Forma products you need or use, we will be happy to discuss your applications. If you are experiencing technical problems, working together, we will help you locate the problem and, chances are, correct it yourself...over the telephone without a service call.

When more extensive service is necessary, we will assist you with direct factory trained technicians or a qualified service organization for on-the-spot repair. If your service need is covered by the warranty, we will arrange for the unit to be repaired at our expense and to your satisfaction.

Regardless of your needs, our professional telephone technicians are available to assist you Monday through Friday from 8:00 a.m. to 6:00 p.m. Eastern Time. Please contact us by telephone or fax. If you wish to write, our mailing address is:

Thermo Forma
Millcreek Road, PO Box 649
Marietta, OH 45750

International customers, please contact your local Thermo Forma distributor.

Table of Contents

Section 1 - Installation and Start-up . . . . . 1 - 1
1.1 Freezer Components . . . . . 1 - 1
1.2 Control Panel Keys, Displays and Indicators . . . . . 1 - 2
1.3 Operation of the Keypad . . . . . 1 - 3
1.4 Displays . . . . . 1 - 3
1.5 Installing the Freezer . . . . . 1 - 3
a. Choosing the Location . . . . . 1 - 4
b. Installing the Wall Bumpers . . . . . 1 - 4
c. Installing the Shelves . . . . . 1 - 4
d. RS-232 Communications . . . . . 1 - 4
e. Remote Alarm Contacts and Analog Output . . . . . 1 - 5
f. Attaching the Power Cord . . . . . 1 - 5
g. Connecting the Unit to Electrical Power . . . . . 1 - 5
1.6 Freezer Start-Up . . . . . 1 - 5
a. Setting the Operating Temperature . . . . . 1 - 5
b. Setting the High Temperature Alarm . . . . . 1 - 6
c. Setting the Low Temperature Alarm . . . . . 1 - 6
e. Access Code . . . . . 1 - 6
1.7 Run Mode . . . . . 1 - 6
Chart 1-1 . . . . . 1 - 7

Section 2 - Calibrate . . . . . 2 - 1
2.1 Calibrate Mode . . . . . 2 - 1
a. Calibrating the Control Probe . . . . . 2 - 1
b. Calibrating The Optional Sample Probe . . . . . 2 - 1
Chart 2-1 . . . . . 2 - 2

Section 3 - Configuration . . . . . 3 - 1
3.1 Configuration Mode . . . . . 3 - 1
a. High Alarm Test . . . . . 3 - 1
b. Low Alarm Test . . . . . 3 - 1
c. System Battery Test . . . . . 3 - 1
d. BUS Battery Test . . . . . 3 - 1
e. Display Temperature . . . . . 3 - 1
f. Clear High Stage Alarm . . . . . 3 - 1
g. Setting an Access Code . . . . . 3 - 2
h. RS-485 Address . . . . . 3 - 2
i. Back Up System Type . . . . . 3 - 2
3.2 The RS-232 Configuration . . . . . 3 - 2

Section 4 - Alarms . . . . . 4 - 1
4.1 Alarms . . . . . 4 - 1
a. Wrong Power Alarm . . . . . 4 - 1
b. High Stage System Failure Alarm . . . . . 4 - 1
c. Multiple Alarms . . . . . 4 - 1
4.2 Probe Failure Alarms . . . . . 4 - 1

Section 5 - Maintenance . . . . . 5 - 1
5.1 Cleaning the Cabinet Exterior . . . . . 5 - 1
5.2 Cleaning the Air Filter . . . . . 5 - 1
5.3 Cleaning the Condenser . . . . . 5 - 1
a. Cleaning the Water-cooled Condenser . . . . . 5 - 1
5.4 Defrosting the Chamber . . . . . 5 - 1
5.5 Cleaning the Door Gasket . . . . . 5 - 2
5.6 Cleaning the Vacuum Relief Port . . . . . 5 - 2
5.7 Replacing the Battery(s) . . . . . 5 - 2
5.8 Preparing the Unit for Storage . . . . . 5 - 2
Preventive Maintenance . . . . . 5 - 3

Section 6 - Factory Options . . . . . 6 - 1
6.1 BUS (Back Up System) . . . . . 6 - 1
a. Installing the vent stack, solenoid and injection assembly . . . . . 6 - 1
b. Installing the Temperature Probe . . . . . 6 - 2
c. Connecting the probe/solenoid harness . . . . . 6 - 2
d. BUS Control Panel . . . . . 6 - 3
e. Setting the Optional BUS Set Point . . . . . 6 - 3
f. System Operation Check . . . . . 6 - 3
g. Cleaning the Vent Stack . . . . . 6 - 3
h. Disconnecting the fitting assembly and transfer hose . . . . . 6 - 3
6.2 Chart Recorder . . . . . 6 - 4
a. Installing the chart paper . . . . . 6 - 4
c. Recorder Calibration . . . . . 6 - 4
6.3 Datalogger . . . . . 6 - 5
6.4 Water-Cooled condenser . . . . . 6 - 5
6.5 Five Inner Door Option . . . . . 6 - 5

Section 7 - Specifications . . . . . 7 -1

Section 8 - Spare Parts . . . . . 8 - 1

Section 9 - Refrigeration Schematics . . . . . 9 - 1

Section 10 - Electrical Schematics . . . . . 10 - 1

Section 11 - Warranty . . . . . 11 - 1

Appendix A - Handling Liquid Nitrogen . . . . . A - 1

Appendix B - Handling Liquid CO_2 . . . . . B - 1

First Aid . . . . . C - 1

Section 1 - Installation and Start-up

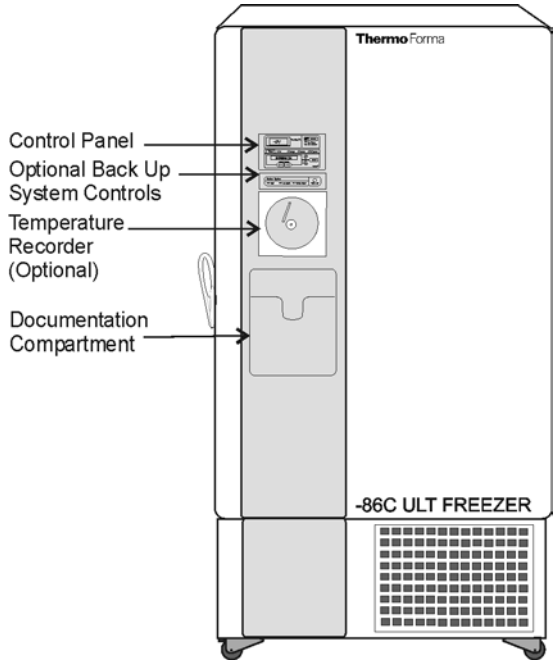

Figure 1-1
Model 8600 Series Front

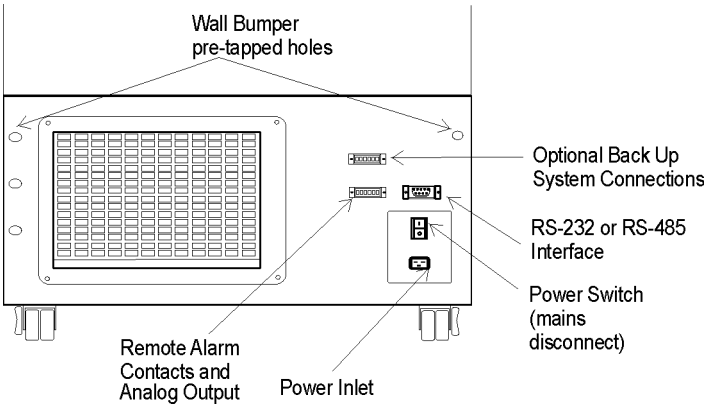

Figure 1-2
Model 8600 Series Rear

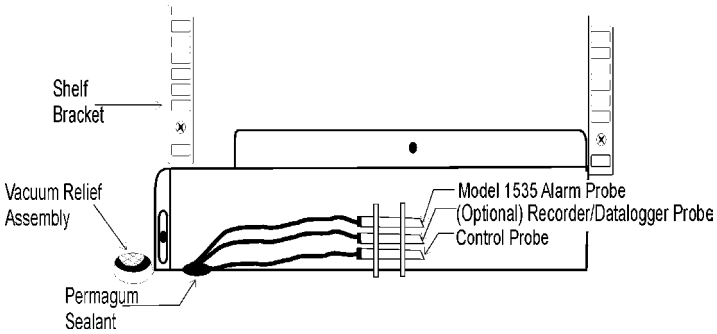

Figure 1-3
Vacuum Relief Port and Probe Cover

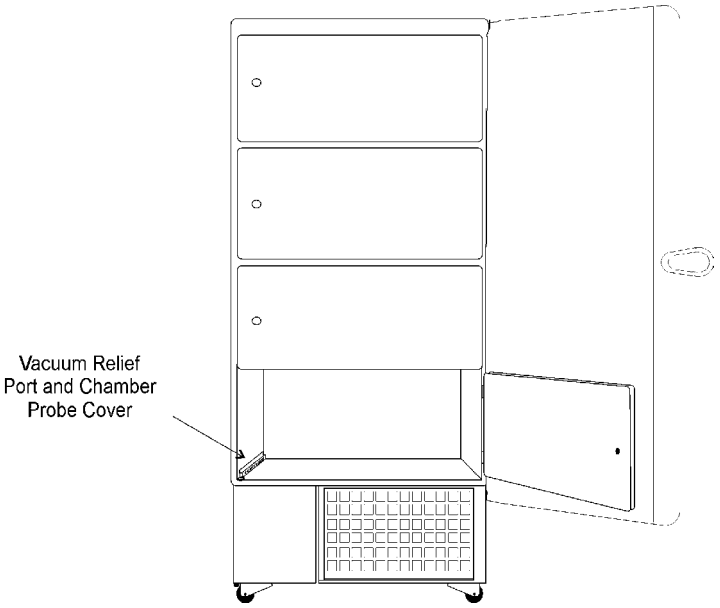

Figure 1-4
Vacuum Relief and Probe Cover Location

1.1 Freezer Components

Figure 1-1

- Control Panel - keypad, displays and indicators.
- BUS (Optional Back Up System) panel.
- Optional temperature recorder - 7 day, one pen or datalogger.
- Documentation compartment - storage of user's manual and other documentation.

Figure 1-2

- Remote alarm contacts and selectable analog output connection - 0-1V, 4-20mA (default), 0-5V).
- Power inlet for power cord connection.
- Optional BUS connections for probe and solenoid.
- RS-232 (default) or RS-485 interface.
- Power Switch (mains disconnect).

Figures 1-3 and 1-4

- Vacuum relief port - pressure equalization port.
- Probe cover - houses control, optional recorder or datalogger and 1535 alarm (optional) probes.

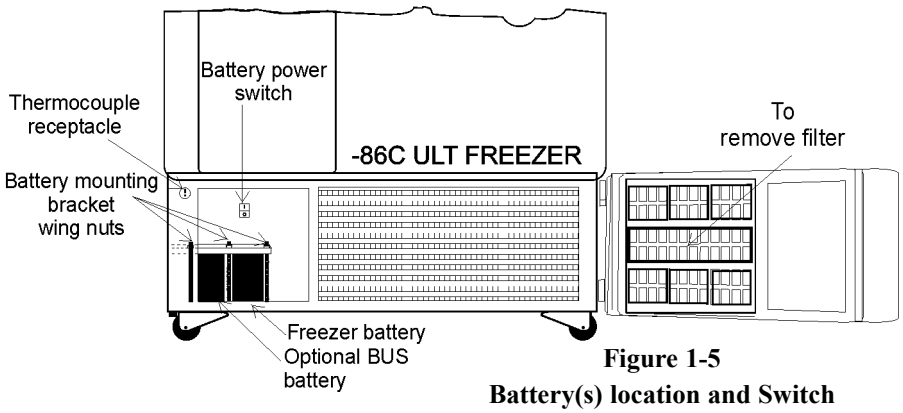

Figure 1-5
Battery(s) location and Switch

Figure 1-5

- Battery mounting bracket wing nuts (three).
- Battery power switch (freezer and BUS).
- Freezer battery.
- Optional BUS battery.
- Freezer filter location.

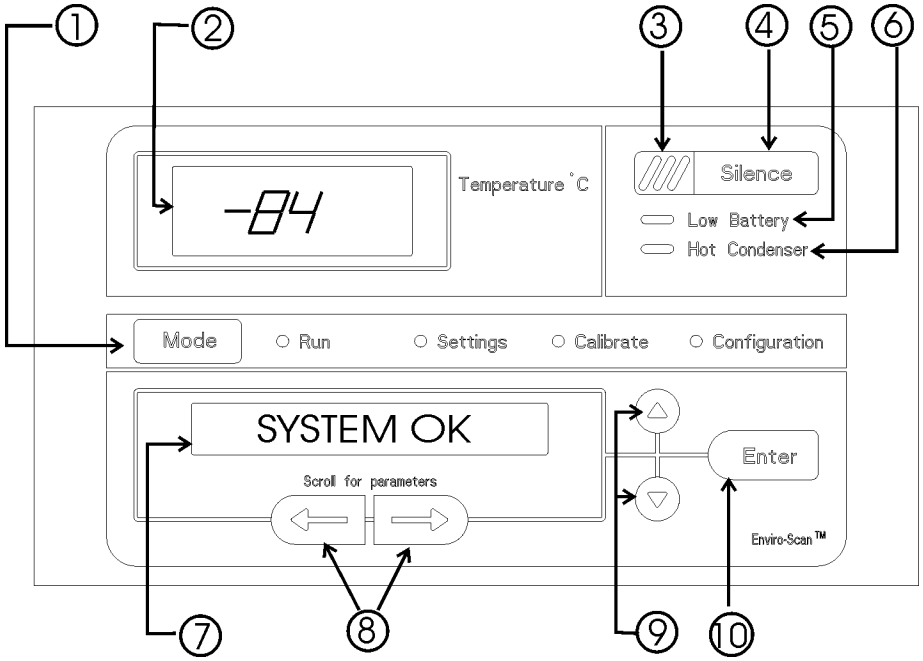

Figure 1-6, Control Panel

1.2 Control Panel Keys, Displays and Indicators (See Figure 1-6)

1. **Mode** Select Switch - Used to select Run, Settings, Calibrate and System Configuration Modes.

   Mode Select Indicators -

   Run: Run Menu

   Settings: Set Points Menu

   Calibrate: Calibrate Menu

   Configuration: Configuration Menu

2. **Temperature Display** - Displays temperature in degrees Celsius.
3. **Alarm Indicator** - Light pulses on/off during an alarm condition of the cabinet.
4. **Silence** - Silences the audible alarm.
5. **Low Battery** - indicates a low battery condition of the freezer battery.
6. **Hot Condenser** - indicates a hot condenser condition.
7. **Message Center** - displays system status and alarms.
8. **Scroll for Parameters Arrows** - moves the operator through the choices of the selected mode.
9. **Up and Down Arrows** - Increases or decreases values, toggles between choices.
10. **Enter** - Stores the value into computer memory.

1.3 Operation of the Keypad

The 8600 Series freezer has four basic modes which allow freezer setup: Run, Settings, Calibrate and Configuration.

Run is the default mode which the freezer will normally be in during operation.

Settings is used to enter system set points for freezer operation.

Calibrate is used to calibrate various system parameters.

Configuration allows for custom setup of various options.

The chart below shows the selections under each of the modes.

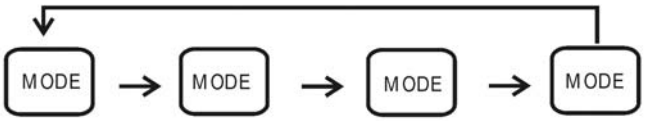

RUN	SETTINGS	CALIBRATE	CONFIGURATION
Default Mode *SYSTEM OK*	Control Set Point	Control Probe	High Alarm Test
LINE VOLTAGE	High Alarm Set Point	Optional Sample Probe	Low Alarm Test
COMPENSATED VOLTAGE	Low Alarm Set Point		System Battery Test
HSHX TEMPERATURE	Optional Back Up System Set Point		BUS Battery Test
			Display Temperature
			Clear High Stage Alarm
			Set Access Code
			RS485 Address
			BUS type CO_2 or LN_2

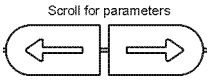

Scroll for Parameters Arrows: Steps the operator through the parameters of SETTINGS, CALIBRATE and CONFIGURATION Modes. The right arrow goes to the next parameter, the left arrow returns to the previous parameter.

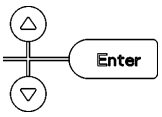

Up Arrow: Increases or toggles the parameter value that has been selected in the SETTINGS, CALIBRATE, and CONFIGURATION Modes.

Enter: Must press Enter key to save to memory all changed values.

Down Arrow: Decreases or toggles the parameter values that have been selected in the SETTINGS, CALIBRATE and CONFIGURATION Modes.

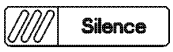

Silence Key: Press to silence the audible alarm. See Section 4 for alarm ringback times.

1.4 Displays

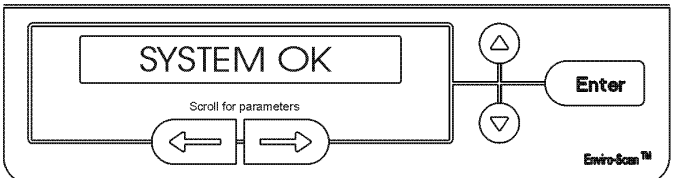

Message Center: Displays the system status (Mode) at all times. Displays SYSTEM OK during normal operation, or alarm messages if the system detects an alarm condition. See Section 4.1- Alarms.

1.5 Installing the Freezer

If tipped more than 45°, allow the unit to set upright for 24 hours before start up.

To remove the freezer from the pallet, use the 7/16" wrench to remove all the bolts securing the shipping bracket to the pallet.

Remove the shipping bracket. Remove the ramp boards from the pallet and place the slotted end over the ramp brackets on the pallet. The support blocks on the ramps will be facing down. Before moving the freezer, make sure the casters are unlocked and moving freely. Align the caster with the ramp boards. Use adequate personnel to roll the freezer off the pallet.

The freezer can be easily pushed to the desired approved location, described in Section 1.5.a. If necessary, the doors and lower front panel may be opened to move the unit through tight openings. When the freezer is in position, set the front caster brakes.

The freezer must not be moved with the product load inside.

a. Choosing the Location

Locate the freezer on a firm, level surface in an area with an ambient temperature between 18°C and 32°C. Provide ample room to reach the mains disconnect switch (power switch) located on the rear of the freezer.

For proper ventilation and airflow, a minimum clearance of 5" at the rear and top and a clearance of 8" on the side of the freezer is required. Allow adequate space in the front of the freezer for door opening.

b. Installing the Wall Bumpers

The parts bag, located inside the cabinet, contains the following parts.

Quantity	Stock #	Description	Purpose
2	510016	1/4-20 x 5-1/2" Bolt	Wall Bumper
2	380520	Neoprene Cap	Cap Protector

Install the bolts into the pre-tapped holes on the back of the compressor section. Install a neoprene cap on each bolt. Refer to Figure 1-2 for the locations of the pre-tapped holes.

c. Installing the Shelves

Install the shelf clips into the shelf pilasters (front and back) at the desired shelf level. Install the shelves in the cabinet onto the clips.

NOTE: On units having the optional 5 inner door option, refer to the instructions accompanying the inner door kit.

d. RS-232 Communications

The 8600 series freezer has a data communications interface. The factory default setting is RS-232.

The wiring identification for the interface is shown in Figure 1-7. One nine pin, sub "D" style connector is located on the back of the freezer. See Figure 1-2 for the location of the connector on the freezer.

RS-232 INTERFACE RECEPTACLE

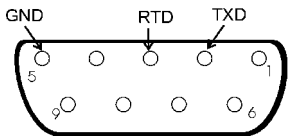

Figure 1-7

The freezer transmits temperature information one minute after power is first applied to the unit, then every 60 minutes thereafter.

Data format:

Baud	1200
Data bits	8 (7 bit ASCII with leading zero)
Start bits	1
Stop bits	2
Parity	none

The data transfer sequence is transmitted in the following format. X refers to numerical temperature data.

(NUL) (-) XXX (SP) C (SP) (OVERTEMP) (SP) (LF) (CR) (EOT) (SP) (UNDER TEMP)

The words "OVER TEMP" or "UNDER TEMP" are transmitted when an alarm condition exists along with the temperature. If no alarm condition exists, spaces will be sent. A total of 20 characters will be sent.

SP - Space
CR - Carriage return
NUL - Null character (00)
LF - Line feed
EOT - End of text (4)

e. Remote Alarm Contacts and Analog Output

The 8600 series freezer has remote alarm contacts and analog output. The remote alarm provides a NO (normally open) output, a NC (normally closed) output and COM (common). The contacts will trip on a power outage, high temperature alarm or low temperature alarm.

The pin configuration for the remote contacts/analog output is shown below (in alarm state). The analog output function allows the freezer to output signals representing the temperature of the freezer cabinet. The factory default setting is 4-20 mA. Refer to figure 1-9 for output specifications.

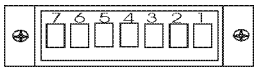

REMOTE CONTACTS/ANALOG OUTPUT	
PIN# 1	Analog Output +
PIN# 2	Analog Output -
PIN# 3	Not Connected
PIN# 4	Not Connected
PIN# 5	Normally Closed
PIN# 6	Common.
PIN# 7	Normally Open

CONTACT RATING: 1A @ 30V

Figure 1-8

	4-20 mA	0-1V	0-5V
Temperature	-100 to +50°C	-100 to +50°C	-100 to +50°C

Figure 1-9

IMPORTANT USER INFORMATION

Caution! Stored product should be protected by an activated alarm system capable of initiating a timely response 24 hours/day. Alarms provide interconnect for centralized monitoring.

f. Attaching the Power Cord

Insert the power cord into the power outlet module (A). Tighten screws (B) on the power cord retainer.

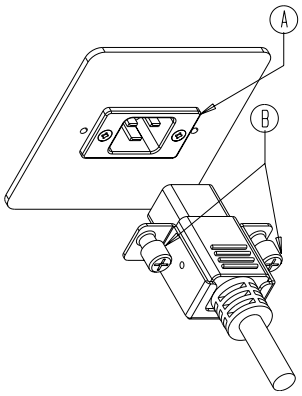

Figure 1-10

g. Connecting the Unit to Electrical Power

See the serial tag on the side of the unit for electrical specifications or refer to the electrical schematics in this manual.

The freezer should be operated on a dedicated grounded service. Check the voltage rating on the serial tag of the unit and compare it with the outlet voltage. Then, with the power switch turned off, plug the line cord into the wall outlet.

First turn on the freezer power switch. Then open the lower front door by grasping the bottom left corner. Locate the battery switch and turn it on. See Figure 1-5. During initial freezer start-up, the system battery may require charging and the Low Battery message may appear in the message center.

Assure the battery switch is turned on. The rechargeable batteries require 36 hours to charge at initial start-up. A "Low Battery" alarm may occur until the batteries are fully charged. Should a power failure occur during the initial start-up period, the electronics will have limited operation.

1.6 Freezer Start-Up

With the freezer properly installed and connected to power, system set points can be entered. The following set points can be entered in Settings mode: Control temperature, high temperature alarm set point, low temperature alarm set point, and (optional) BUS set point. Default settings are shown in the table below. See Chart 1-1 for more detail.

Control Set Point	-80°C
High Temperature Alarm	-70°C
Low temperature alarm	-90°C
Optional BUS Set Point	-60°C

If the set point is changed and the low temperature and high temperature alarms are set 10° from the set point, the alarm set points will be adjusted automatically to maintain a distance of at least 10° from set point.

a. Setting the Operating Temperature

All 8600 Series freezers have an operating temperature range of -50°C to -86°C, depending on ambient temperature. The freezer is shipped from the factory with a temperature set point of -80°C. To change the operating temperature set point:

1. Press the Mode key until the Settings indicator lights.

2. Press the right arrow until “SET PT = -XX” is displayed in the message center.
3. Press the up/down arrow key until the desired temperature set point is displayed.
4. Press Enter to save the set point.
5. Press the Mode key until the Run indicator lights for Run mode or press the right/left arrow keys to go to next/previous parameter.

If no control keys are pressed, the freezer will automatically return to RUN mode after 5 minutes.

b. Setting the High Temperature Alarm

The high temperature alarm will activate an audible/visual warning when the freezer chamber temperature has reached or exceeded the high temperature alarm set point.

To set the high temperature alarm set point:

1. Press the Mode key until the Set indicator lights.
2. Press the right arrow until “HI ALM = -XX” is displayed in the message center.
3. Press the up or down arrow key until the desired high temperature alarm set point is displayed.
4. Press Enter to save the setting.
5. Press the Mode key until the Run indicator lights or press the right or left arrow to go to the next or previous parameter.

If no control keys are pressed, the freezer will automatically return to RUN mode after 5 minutes.

Note: The high alarm set point must be set at least 10°C from the control set point.

c. Setting the Low Temperature Alarm

The low temperature alarm will activate an audible/visual warning when the freezer chamber temperature has reached or decrease below the low temperature alarm set point.

To set the low temperature alarm set point:

1. Press the Mode key until the Settings indicator lights.
2. Press the right arrow until “LO ALM = -XX” is displayed in the message center.
3. Press the up or down arrow key until the desired low temperature alarm set point is displayed.
4. Press Enter to save the setting.
5. Press the Mode key until the Run indicator lights or press the right or left arrow to go to the next or previous parameter.

If no control keys are pressed, the freezer will automatically return to RUN mode after 5 minutes.

Note: The low alarm set point must be set at least 10°C from the control set point.

d. Access Code

An access code of 000 is required to access the Settings, Calibrate or Configuration modes. If the access code is not at the default 000, you can not leave RUN mode without entering a code. See section 3.1.d for instructions on modifying the access code.

1.7 Run Mode

The Run mode is the default mode for the freezer. The run mode will display the cabinet temperature on the temperature display and ‘SYSTEM OK’ on the message center under normal operating conditions. In addition, the Run mode allows display of the following information:

LINE VOLTAGE

COMPENSATED VOLTAGE

HSHX TEMPERATURE (heat exchanger temperature)

This information is scrolled individually by pressing the right arrow key. In each case, the message center returns to SYSTEM OK in 10 seconds if no keys are pressed.

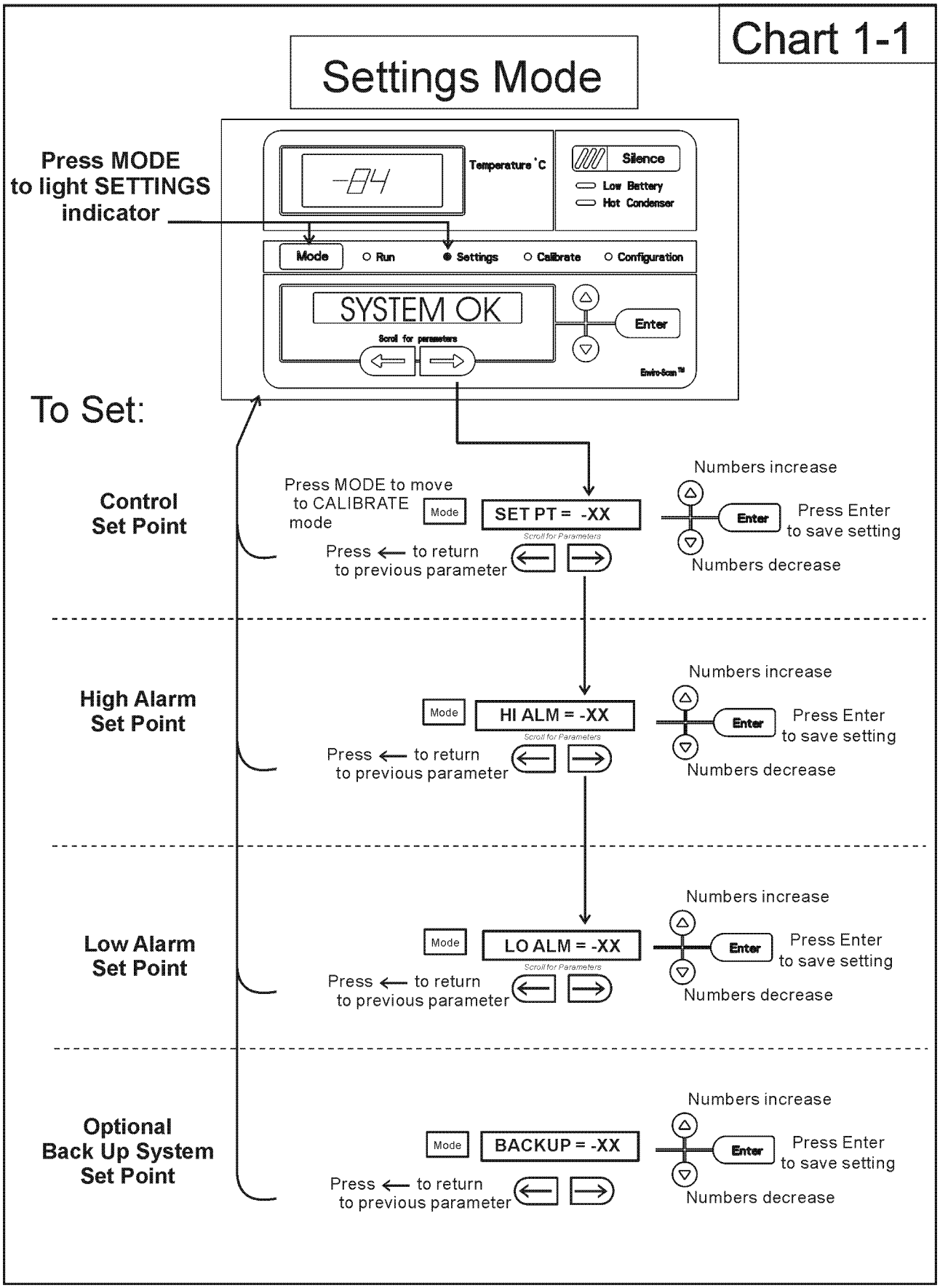
Chart 1-1
Settings Mode
Press MODE to light SETTINGS indicator
Temperature °C
Silence
Low Battery
Hot Condenser
Mode
Run
Settings
Calibrate
Configuration
SYSTEM OK
Scroll for parameters
Enter
Enviro-Scan™
To Set:
Control Set Point
Press MODE to move to CALIBRATE mode
Mode
SET PT = -XX
Scroll for Parameters
Press ← to return to previous parameter
Numbers increase
Enter
Press Enter to save setting
Numbers decrease
High Alarm Set Point
Mode
HI ALM = -XX
Scroll for Parameters
Press ← to return to previous parameter
Numbers increase
Enter
Press Enter to save setting
Numbers decrease
Low Alarm Set Point
Mode
LO ALM = -XX
Scroll for Parameters
Press ← to return to previous parameter
Numbers increase
Enter
Press Enter to save setting
Numbers decrease
Optional Back Up System Set Point
Mode
BACKUP = -XX
Press ← to return to previous parameter
Numbers increase
Enter
Press Enter to save setting
Numbers decrease

Section 2 - Calibrate

2.1 Calibrate Mode

Once the freezer has stabilized, the control or sample probe may need to be calibrated. Calibration frequency is dependent on use, ambient conditions and accuracy required. A good laboratory practice would require at least an annual calibration check. On new installations, all parameters should be checked after the stabilization period.

Before making any calibration or adjustments to the unit, it is imperative that all reference instruments be properly calibrated.

a. Calibrating the Control Probe

Plug a type T thermocouple reader into the receptacle located inside the lower door (see Figure 1-5). Compare the control temperature set point to the temperature of the measuring device. See Chart 2-1 at the end of this section for more detail.

1. Press the Mode key until the Calibrate indicator lights.
2. Press the right arrow until “CONT T = -XX.X” appears in the message center.
3. Press up/down arrow to match the display to calibrated instrument.
4. Press Enter to store calibration.
5. Press the Mode key to return to Run or the right/left arrow to go to next/previous parameter.

b. Calibrating the Optional Sample Probe

For freezers with the optional sample probe, place the calibrated instrument in the center of the sample bottle. The bottle should contain an appropriate medium and the measuring instrument should be centered in the bottle.

1. Press the Mode key until the Calibrate indicator lights.
2. Press the right arrow until “SAMP T = -XX.X” appears in the message center.
3. Press up/down arrow to match display to calibrated instrument.
4. Press Enter to store calibration.
5. Press the Mode key to return to Run or the right/left arrow to go to next/previous parameter.

See Chart 2-1 for calibration process functions.

Temperature Stabilization Periods

Startup - Allow 12 hours for the temperature in the cabinet to stabilize before proceeding.

Already Operating - Allow at least 2 hours after the display reaches set point for temperature to stabilize before proceeding.

During calibration, the temperature display will not be available.

If no keys are pressed for approximately five minutes while in calibration mode, the system will reset to Run mode.

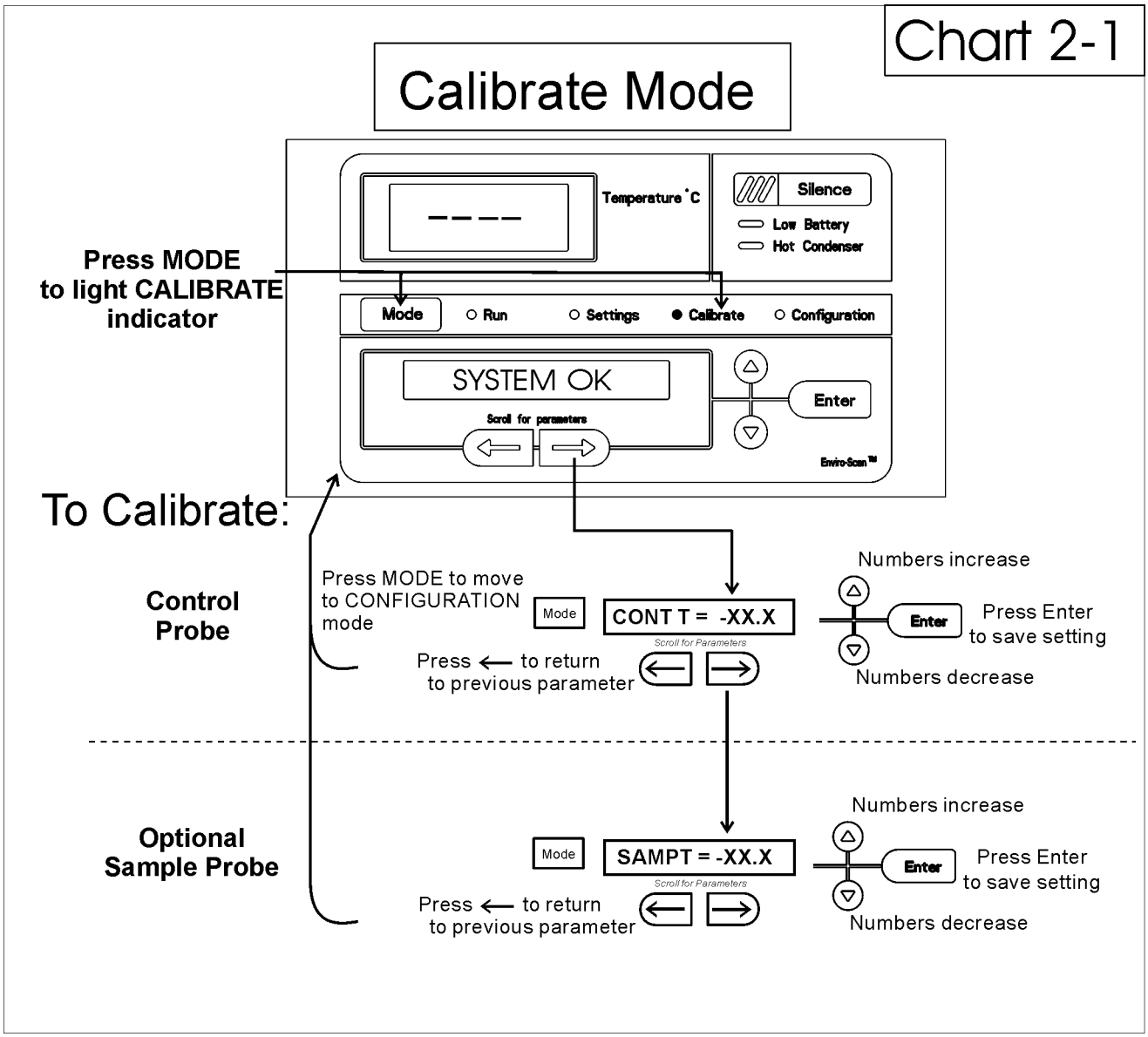
Chart 2-1
Calibrate Mode
Temperature °C
Silence
Low Battery
Hot Condenser
Press MODE
to light CALIBRATE
indicator
Mode
Run
Settings
Calibrate
Configuration
SYSTEM OK
Scroll for parameters
Enter
Enviro-Scan™
To Calibrate:
Control
Probe
Press MODE to move
to CONFIGURATION
mode
Mode
CONT T = -XX.X
Scroll for Parameters
Press ← to return
to previous parameter
Numbers increase
Enter
Press Enter
to save setting
Numbers decrease
Optional
Sample Probe
Mode
SAMPT = -XX.X
Scroll for Parameters
Press ← to return
to previous parameter
Numbers increase
Enter
Press Enter
to save setting
Numbers decrease

Section 3 - Configuration

3.1 Configuration Mode

The Configuration Mode is used for testing and custom setup of the freezer. The configuration functions listed and described below may not be necessary in all applications, but are available if needed. See Chart 3-1 for more detail.

a. High Alarm Test

The high alarm test is used to verify the high alarm will activate, should the freezer temperature equal or exceed the high alarm set point.

1. Press the Mode key until the Configuration indicator lights.
2. Press the right arrow until HI ALRM TEST is displayed in the message center.
3. Press Enter to initiate the test.

The temperature on the display will begin to increase until the high alarm set point has been reached. The audible alarm will sound and the alarm indicator will flash. Press the Silence key to silence the alarm.

b. Low Alarm Test

The low alarm test is used to verify the low alarm will activate, should the freezer temperature equal or become less than the low alarm set point.

1. Press the Mode key until the Configuration indicator lights.
2. Press the right arrow until LO ALRM TEST is displayed in the message center.
3. Press Enter to initiate the test.

The temperature on the display will begin to decrease until the low alarm set point has been reached. The audible alarm will sound and the alarm indicator will flash. Press the Silence key to silence the alarm.

c. System Battery Test

To test the charge of the freezer battery:

1. Press the Mode key until the Configuration indicator lights.
2. Press the right arrow until SYS BAT TEST is displayed in the message center.
3. Press Enter to initiate the test.

TESTING BATT will display during the testing period. Upon completion of the test the message center will display BATT GOOD or BATT FAIL When a test is failed, the audible alarm will sound, the alarm indicator and the Low Battery indicator will light. Press the Silence key and the alarm indicator will go off. The Low Battery light will stay on until a future battery test is performed and passed.

d. BUS Battery Test

To test the charge of the BUS battery:

1. Press the Mode key until the Configuration indicator lights.
2. Press the right arrow until BUS BAT TEST is displayed in the message center.
3. Press Enter to initiate the test.

TESTING BATT will display during the testing period. Upon completion of the test the message center will display BBAT GOOD or BBAT FAIL When a test is failed, the audible alarm will sound, the alarm indicator and the Low Battery indicator will light. Press the Silence key and the alarm indicator will go off. The Low Battery light will stay on until a future battery test is performed and passed.

e. Display Temperature

This function, only available on freezers with the optional sample probe, allows the user to select which temperature is displayed in the temperature display window. The options are CONTROL or SAMPLE.

1. Press the Mode key until the Configuration indicator lights.
2. Press the right arrow until DISP CONTROL or DISP SAMPLE is displayed in the message center.
3. Press up/down arrow to toggle between the two display selections.
4. Press Enter to save.

If control probe is selected, the temperature display will be on continuously. If sample probe is selected, the temperature display will be preceded with a letter ‘S’.

f. Clear High Stage Alarm

Should a high stage alarm occurred, it may become necessary to the clear the alarm condition after the condition has been corrected.

1. Press the Mode key until the Configuration indicator lights.
2. Press the right arrow until CLR HS ALARM is displayed in the message center.
3. Press Enter to clear the alarm.

g. Setting an Access Code

To set the Access Code:

1. Press the Mode key until the Configuration indicator lights.
2. Press the right arrow until “SET ACC CODE” is displayed in the message center.
3. Press Enter.
4. The message center will display ACC CODE = 000. Press the up or down arrow key until the desired access code is displayed (000 - 999). Press the left or right arrow key to select digit 1, 2, 3.

The left and right arrow keys are used to move from the first through the third digits within the access code.

5. Press Enter to save the setting
6. Press the Mode key until the Run indicator lights.A 3-digit Access Code can be entered to avoid unauthorized personnel from changing the set points, calibration, or configuration. A setting of 000 will bypass the access code. The factory setting is 000.

h. RS485 Address

If the freezer is configured for RS-485 communications, it will need to have a unique identification address. This address is set through the Configuration mode.

1. Press the Mode key until the Configuration indicator lights.
2. Press the right arrow until RS485ADDR is displayed in the message center.
3. Press Enter. The message center will display 485 ADDR XX.
4. Press up/down arrow to select the appropriate address for the freezer (1 - 24).
4. Press Enter to save.

i. Back Up System Type

This function, which is only available on freezers with the optional BUS (back up system), allows the user to select which type of gas is injected into the freezer chamber. The options are CO_2 and LN_2.

1. Press the Mode key until the Configuration indicator lights.
2. Press the right arrow until BUS TYPE CO2 or BUS TYPE LN2 is displayed in the message center.
3. Press up/down arrow to toggle between the two display selections.
4. Press Enter to save.

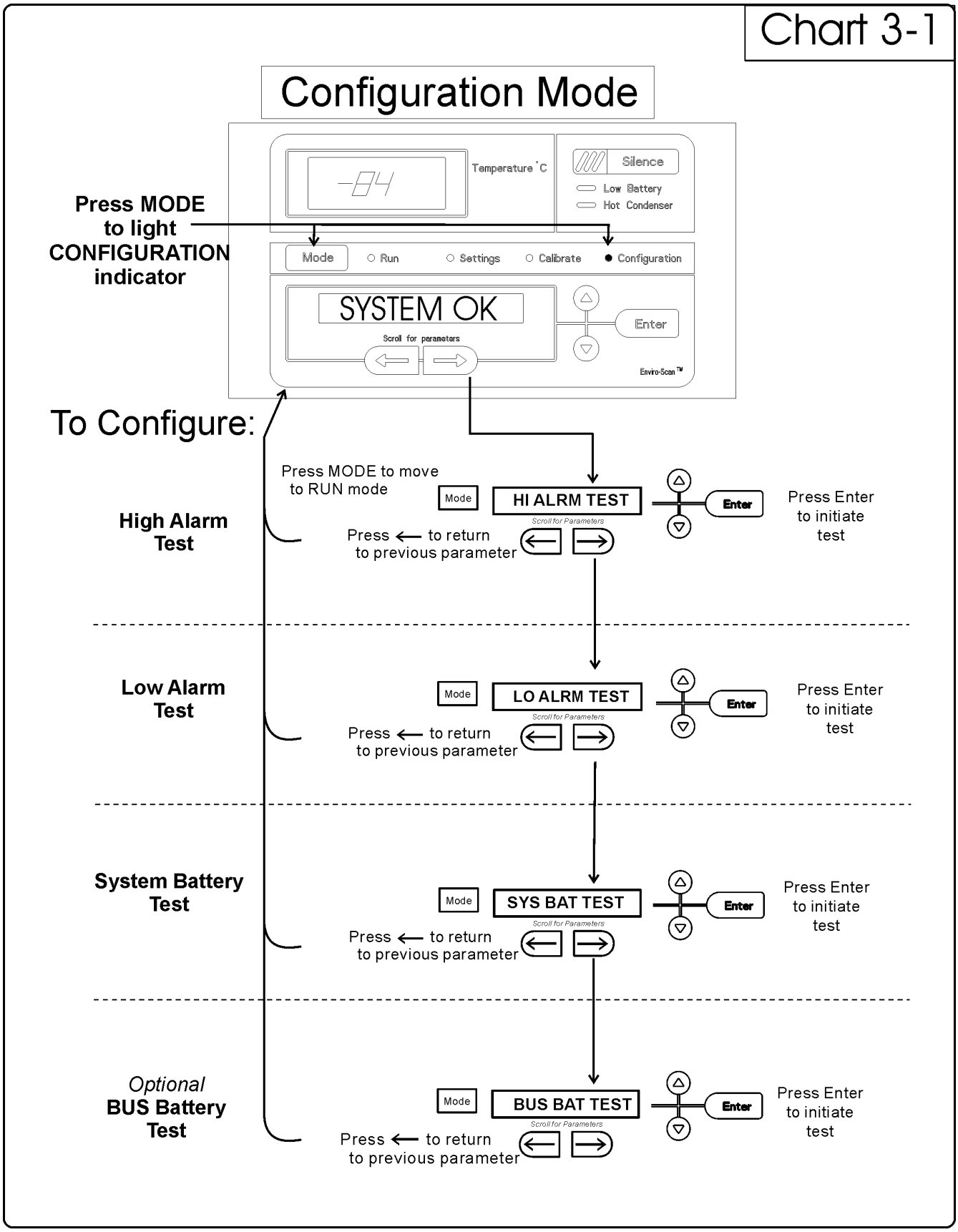
Chart 3-1
Configuration Mode
Temperature °C
Silence
Low Battery
Hot Condenser
Mode
Run
Settings
Calibrate
Configuration
SYSTEM OK
Scroll for parameters
Enter
Enviro-Scan™
Press MODE to light CONFIGURATION indicator
To Configure:
Press MODE to move to RUN mode
High Alarm Test
Mode
HI ALRM TEST
Scroll for Parameters
Enter
Press Enter to initiate test
Press ← to return to previous parameter
Low Alarm Test
LO ALRM TEST
System Battery Test
SYS BAT TEST
Optional BUS Battery Test
BUS BAT TEST

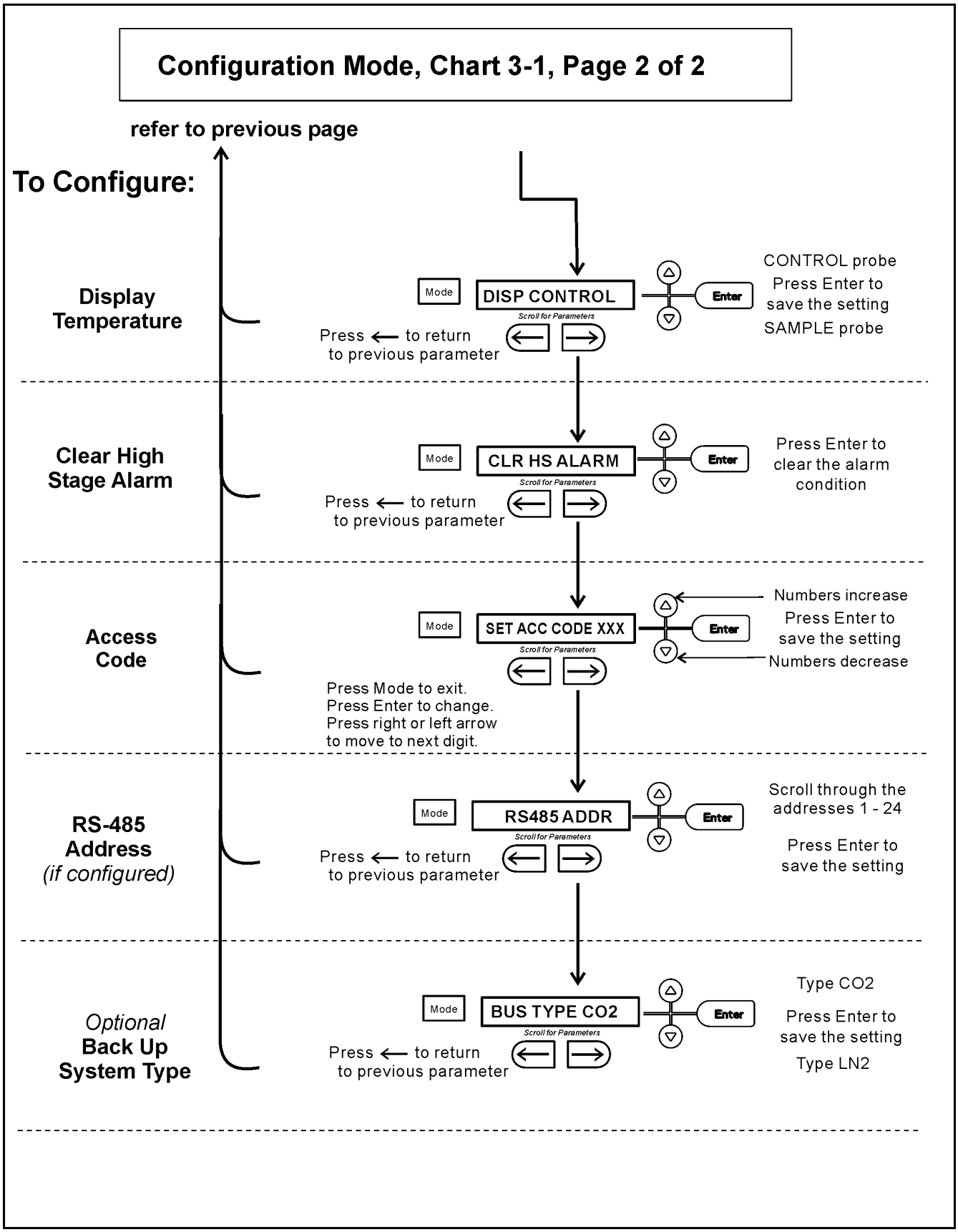
Configuration Mode, Chart 3-1, Page 2 of 2
refer to previous page
To Configure:
Display Temperature
Mode
DISP CONTROL
Enter
Scroll for Parameters
Press ← to return to previous parameter
CONTROL probe
Press Enter to save the setting
SAMPLE probe
Clear High Stage Alarm
Mode
CLR HS ALARM
Enter
Scroll for Parameters
Press ← to return to previous parameter
Press Enter to clear the alarm condition
Access Code
Mode
SET ACC CODE XXX
Enter
Scroll for Parameters
Numbers increase
Press Enter to save the setting
Numbers decrease
Press Mode to exit.
Press Enter to change.
Press right or left arrow to move to next digit.
RS-485 Address
(if configured)
Mode
RS485 ADDR
Enter
Scroll for Parameters
Press ← to return to previous parameter
Scroll through the addresses 1 - 24
Press Enter to save the setting
Optional Back Up System Type
Mode
BUS TYPE CO2
Enter
Scroll for Parameters
Press ← to return to previous parameter
Type CO2
Press Enter to save the setting
Type LN2

Section 4 - Alarms

4.1 Alarms

The Model 8600 Series freezer alarm system is shown in the table below. When an alarm is active, the message appears in the LED message center. Press the Silence key to disable the audible alarm for the ringback period. The visual alarm will continue until the freezer returns to a normal condition. The alarms are momentary alarms only. When an alarm condition occurs and then returns to normal, the freezer automatically clears the alarm condition and the message center.

Description	Message	Delay	Ringback	Relay
No alarm condition exists	SYSTEM OK	----	----	----
Power Failure	POWER FAIL	1 min.	15 min.	Yes
High Temperature Alarm	TEMP IS HIGH	1 min.	15 min.	Yes
Low Temperature Alarm	TEMP IS LOW	1 min.	15 min.	Yes
Door Ajar	DOOR IS OPEN	1 min.	15 min.	No
Low Battery	LOW BATTERY	1 min.	12 hours	No
Control Probe Failure - see 4.2	PROBE 1 FAIL	1 min.	15 min.	No
Heat Exchanger Probe Failure - see 4.2	PROBE 2 FAIL	1 min.	15 min.	No
Condenser Probe - see 4.2	PROBE 3 FAIL	1 min.	15 min.	No
Sample Probe Failure (optional) - see 4.2	PROBE 4 FAIL	1 min.	15 min.	No
High Stage System Failure	HS SYST FAIL	1 min.	15 min.	No
Condenser Hot Condition	HOT CONDENSR	1 min.	none	No
Wrong Power	WRONG POWER	0 min.	none	No
Filter Needs Cleaning	CLEAN FILTER	0 min.	3 months	No
Gasket Needs Cleaning	CLEAN GASKET	0 min.	3 months	No

All alarm delays and ringback times are ±30 seconds.

a. Wrong Power Alarm

If a 230 V freezer is connected to a 120 V power source or a 120 V freezer is connected to a 230 V power source, the electronics will detect that an incorrect power source has been connected to the freezer. Under this condition, the fans and compressors will not turn on and an audible and visual alarm will occur along with the "WRONG POWER" message in the LED message center. The audible and visual alarms will remain until the freezer is connected to the correct power source.

b. High Stage System Failure Alarm

This condition is created when the high stage compressor and fans run for 30 minutes and are not capable of cooling the interstage heat exchanger to the proper temperature. Under this condition, the high stage compressor and fans will turn off after 30 minutes and an audible and visual alarm will occur along with the "HS SYST FAIL" message in the LED message center.

c. Multiple Alarms

When multiple alarm conditions occur, active messages are displayed in the message center one at a time, updating at 5 second intervals. Pressing Silence during multiple alarms causes all active alarms to be silenced and to ring back in 15 minutes.

4.2 Probe Failure Alarms

The microprocessor in 8600 series freezers continually scans all probes including the control probe, heat exchanger probe, condenser probe and optional sample probe to ensure that they are operating properly. Should an error be detected, the "PROBE # FAIL" alarm will occur as described in 4.1 above. If an error is detected with the control probe (PROBE 1 FAIL), the high and low stage compressors will run continuously. As a result, the cabinet temperature will decrease until it reaches the lowest temperature that the refrigeration system can maintain. If an error is detected with the heat exchanger probe (PROBE 2 FAIL), the freezer will cycle properly at its temperature set point using a 5 minute step start between the high and low stage compressors. If an error is detected with the condenser probe (PROBE 3 FAIL) or optional sample probe (PROBE 4 FAIL), there is no impact on the performance of the freezer. However, the hot condenser alarm may also occur when the condenser probe fails. Contact the Thermo Forma Service Department (1-888-213-1790) or your local distributor.

Section 5 - Maintenance

5.1 Cleaning the Cabinet Exterior

Avoid the excessive use of water around the control area due to the risk of electrical shock. Damage to the controls may also result.

Wipe down the freezer exterior using soap and water and a general use laboratory disinfectant. Rinse thoroughly with clean water and dry with a soft cloth.

5.2 Cleaning the Air Filter (minimum four times a year*)

1. Open the front lower door by grasping the bottom left corner.
2. Locate the grille on the door. See Figure 1-5. Grasp the middle of the grille material and gently pull out to remove.
3. Wash the filter material using water and a mild detergent.
4. Dry by pressing between two towels.
5. Install the filter back into the grille and attach the grille.

* The clean filter alarm occurs every three months as a reminder to clean the air filter. Depending upon environmental conditions, the filter may need to be cleaned or replaced more frequently. If the filter becomes torn or excessively dirty, a replacement can be purchased from Thermo Forma. Order part number 760203.

5.3 Cleaning the Condenser (minimum of twice a year*)

1. Open the front lower door by grasping the bottom left corner. See Figure 1-5.
2. Using a vacuum cleaner, exercising care to not damage the condenser fins, clean the condenser.

* Depending upon environmental conditions, the condenser may need to be cleaned more frequently.

a. Cleaning the Water-cooled Condenser

The water-cooled condenser can be cleaned-in-place by using the CIP procedure. Cleaning solutions can be used, depending on type of deposits or build-up to be removed.

Do not use liquids that are corrosive to stainless steel or the brazing material (copper or nickel).

CIP (Clean-In-Place) Procedure

1. Disconnect the unit from the water supply.
2. Drain the unit.
3 . Rinse with fresh water and drain the unit again.
4. Fill with fresh water.
5. Add cleaning agent (solution and concentration dependent on deposits or build-up).
6. Circulate cleaning solution (if feasible).
7. Drain the cleaning solution.
8. Add and circulate a passivating liquid for corrosion inhibition of plate surfaces.
9. Drain this liquid.
10. Rinse with fresh water and drain.
11. Reconnect the water supply and fill the unit.
12 . Return to service.

5.4 Defrosting the Chamber

1. Remove all product and place it in another freezer.
2. Turn the unit off and disconnect it from the power source.
3. Turn off the power switch (see figure 5-1) to the battery(s).
4. Open all of the doors and place towels on the chamber floor.
5. Allow the frost to melt and become loose.
6. Remove the frost with a soft cloth.
7. After defrosting is complete, clean the interior with a non-chloride detergent. Rinse thoroughly with clean water and dry with a soft cloth.
8. Plug unit in and turn power switch on.
9. Turn the battery power switch to the on position.
10. Allow the freezer to operate empty overnight before reloading the product.

5.5 Cleaning the Door Gasket (minimum monthly*)

Using a soft cloth, remove any frost build-up from the gasket and door(s). The clean gasket alarm occurs every three months as a reminder to remove frost build-up from the gasket and doors. Press the Silence key to disable the audible alarm.

*The door gasket may need to be cleaned more frequently if dirt or excessive frost build-up prevents the door from closing properly.

5.6 Cleaning the Vacuum Relief Port (minimum monthly*)

Using a soft cloth, remove any frost build-up from the vacuum relief, located in the front left corner of the chamber. See figures 1-3 and 1-4.

The vacuum relief port contains a small heating element. If the freezer is not disconnected from the electrical supply or turned off at the power switch, the heating element will continue to operate and may cause injury to personnel cleaning the freezer chamber.

5.7 Replacing the Battery(s)

1. To gain access to the battery, open the lower door by grasping the bottom left corner. The battery is rectangular in shape, located on the front left corner of the compressor compartment and is secured in place by a mounting bracket with three bolts.
2. Directly above the battery(s) is the battery power switch. Turn the battery power switch to the off position.
3. Disconnect the battery connections
4. Remove the three nuts securing the battery bracket.
5. Remove the bracket and old battery, install the new battery and secure.
6. Reconnect the battery (red to positive and black to negative).
7. Turn on the battery power switch.
8. Close lower panel door.

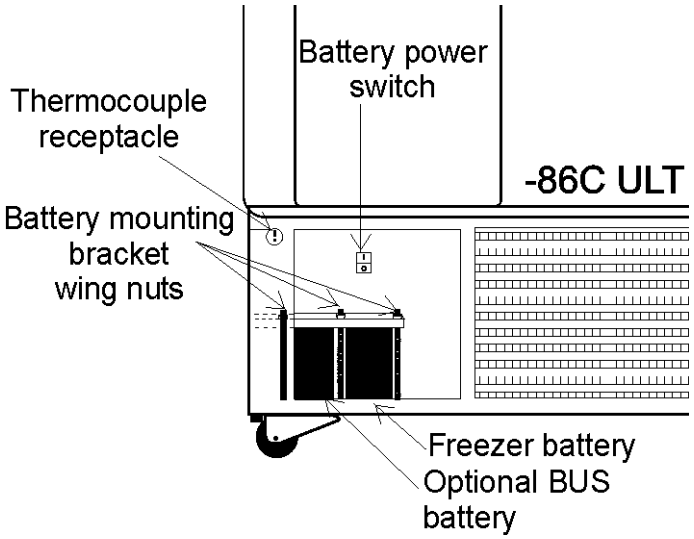

Figure 5-1

For a consistent and dependable charge, replace the battery every 2 years. Replacement batteries must be rechargeable and are available from Thermo Forma. Refer to the parts list for stock number and description of the replacement batteries (part number 400159). Dispose of the used batteries in a safe manner and in accordance with good environmental practices.

5.8 Preparing the Unit for Storage

Defrost the unit as described in Section 5.4. This will prepare the unit for storage. Turn off the battery power switch. Turn off the freezer power switch. Disconnect power to the battery(s) and to the freezer.

If the unit has been in service, turn it off and disconnect the power cord connector before proceeding with any maintenance.

Thermo Forma

PREVENTIVE MAINTENANCE
Freezers

Your Thermo Forma equipment has been thoroughly tested and calibrated before shipment. Regular preventive maintenance is important to keep your unit functioning properly. The operator should perform routine cleaning and maintenance on a regular basis. For maximum performance and efficiency, it is recommended that the unit be checked and calibrated periodically by a qualified service technician.

The following is a condensed list of preventive maintenance requirements. See the specified section of the instruction manual for further details.

Thermo Forma has qualified service technicians, using NIST traceable instruments, available in many areas. For more information on Preventive Maintenance or Extended Warranties, please contact us at the number below.

Cleaning and calibration adjustment intervals are dependent upon use, environmental conditions and accuracy required.

Tips:
• Fill an upright by starting at the bottom near the probe and add racks to one shelf at a time. Allow freezer to recover to set point between shelves.
• Fill a chest by starting at the left side near the probe. Filling with room temperature racks will result in a long pull-down time.
• Fill unit with frozen product to help overall performance; frozen water jugs, for example.
• Always make certain the vacuum relief port is free of frost and ice, to allow for timely re-entry into the freezer after a door opening.

•Millcreek Road, Box 649 •Marietta, Ohio 45750 USA •740-373-4763
•USA and Canada 888-213-1790 •Telefax: 740-373-4189 •email: service@thermoforma.com

Preventive Maintenance for 8600 Series Freezers

Refer to Manual Section	Action	Monthly	Yearly	Every 2 Years
--	Verify ambient temperature, <90°F	☑		
--	* Adjust door handle for firm latching, as needed	☑		
Figure 1-4 for probe location 5.5, 5.6	Check and clean probe cover, vacuum relief port, gaskets, hinges and door of ice and snow	☑ *More frequent cleaning may be required, depending on use and environmental conditions.*		
5.2	Check air filter. Clean or replace as needed	☑		
1.7, 3.1.a	Check alarm back-up battery.	☑		** Replace
--	Check condenser fan motor for unusual motor noise or vibration.		☑	
2	* Verify and document calibration, at the minimum, annually.		☑	
5.3	* Clean condenser compartment and wipe off condenser		☑	

* Qualified service technicians only
** Dispose of properly, according to all state and federal regulations.

Section 6 - Factory Installed Options

6.1 BUS - Back Up System (195875, 195877)

Before installation of BUS components, make sure the power to the freezer is disconnected, the battery switch is turned off and the freezer has warmed to ambient temperature.

The built-in BUS (back up system) will keep the freezer chamber temperature below the critical level in the event of a power or equipment failure. If power to the freezer fails, or temperature increases to the back up alarm set point, the BUS injects liquefied gas into the chamber to keep the chamber temperature within the specified range.

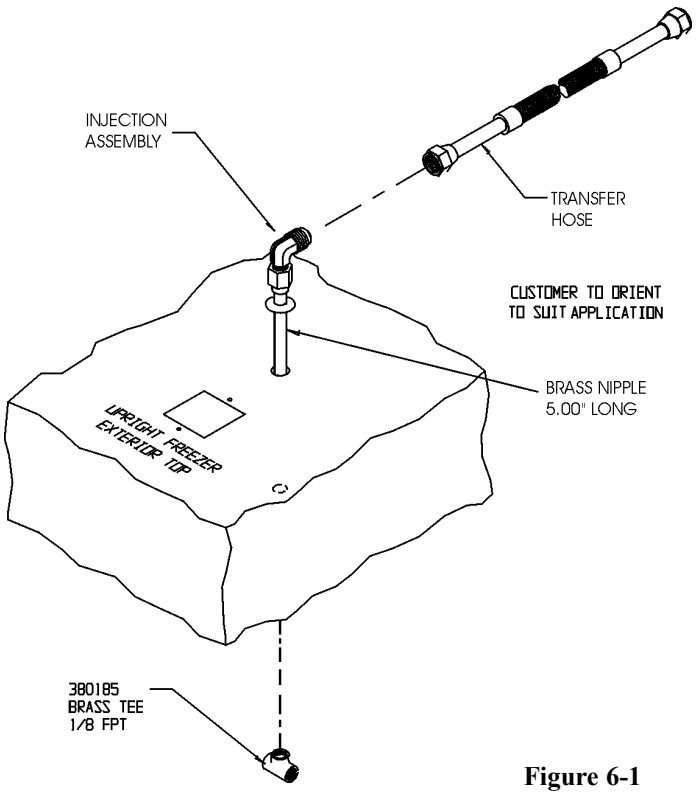

Figure 6-1

The BUS operates on an internal 12-volt, rechargeable battery which is kept charged during normal operation by the integral battery charger.

a. Installing the vent stack, solenoid and injection assembly

1. Install the injection assembly through the 1/2” pre-punched hole, directly behind the 2” vent stack hole in the center of the chamber ceiling. Using a long blade screwdriver or similar instrument, punch a guide hole up through the foam insulation to the top exterior ceiling opening.

CAUTION! Do not use the injection assembly to bore the hole. The injection assembly could become clogged with insulation and not function correctly.

Note: Cover the open end of injection assembly with tape to keep insulation from entering the nipple.

2. Slide 3/8” flatwasher over open end of nipple.
3. Insert the covered end of the injection assembly through the exterior hole.
4. Remove the tape covering from the end of the nipple and install the 1/8” NPT brass tee on the open end of the nipple. Place permagum sealant between the brass tee and the interior top.
5. Use the 1-3/8” x 20” copper tubing. Remove the plastic cap from the beveled end (Caution - it is sharp!) and place the cap on the non-beveled end. Position the beveled end of the tubing against the foam opening and use a back and forth twisting motion to cut a hole through the insulation to the top external opening.

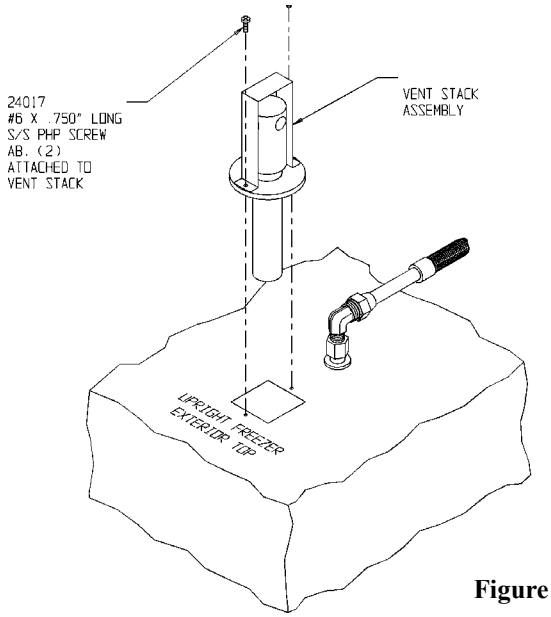

Figure 6-2

6. Remove the two Phillips head screws securing the metal bracket on the vent stack assembly.
7. Install the vent stack through the opening and secure it to the top of the freezer, using screws.
8. Go to the interior and seal around the end of the vent stack with permagum.
9. Install the solenoid valve to the supply.

When selecting a CO_2 supply cylinder, it must be equipped with a siphon tube.

b. Installing the Temperature Probe

10. Locate the 0.500” pre-punched hole in the upper left hand back corner of the chamber ceiling. Remove the tie wrap securing the coiled probe/solenoid harness. Uncoil the probe lead and run the probe tip (approximately 12”) down through 0.500” porthole (Figure 6-4).
11. As shown in Figure 6-3, thread the small tie wrap through the openings in the front of the bracket. Secure the probe on the back of the bracket with the tie wrap.
12. Mount the bracket on the interior left wall of the freezer into the pre-punched holes provided. Figure 6-4 shows the Back-Up probe mounted on the interior left side wall of the freezer.

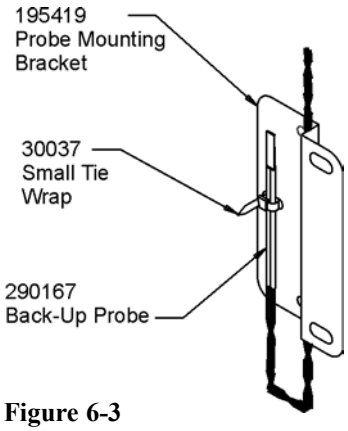

Figure 6-3

c. Connecting the probe/solenoid harness

13. Remove the four screws on the freezer back panel and use them to mount the tie wrap anchors as shown in Figure 6-5. Secure the probe wire with tie wraps.
14. Plug the solenoid/probe connector into the BUS connection and secure with a screw on the right and left side. The connector is keyed.
15. Loosen the terminal screws on the solenoid. Slide the spade lug connectors under the screws and tighten to secure.
16. Connect power to the freezer. Leave the back-up battery switch at the OFF position. Turn the freezer on. The Inject light on the BUS control panel will illuminate but no injection will occur. The Low Battery indicator may also illuminate. Once the freezer has stabilized at the operating temperature, turn the battery switch on.

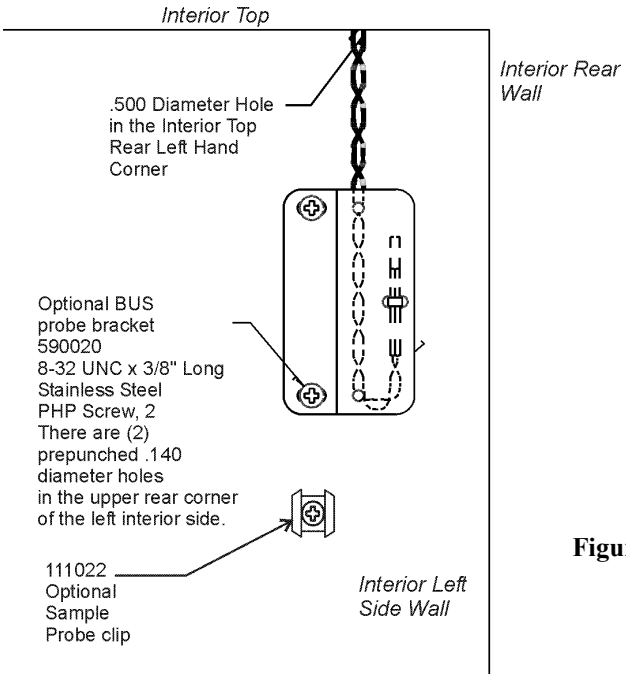

Figure 6-4

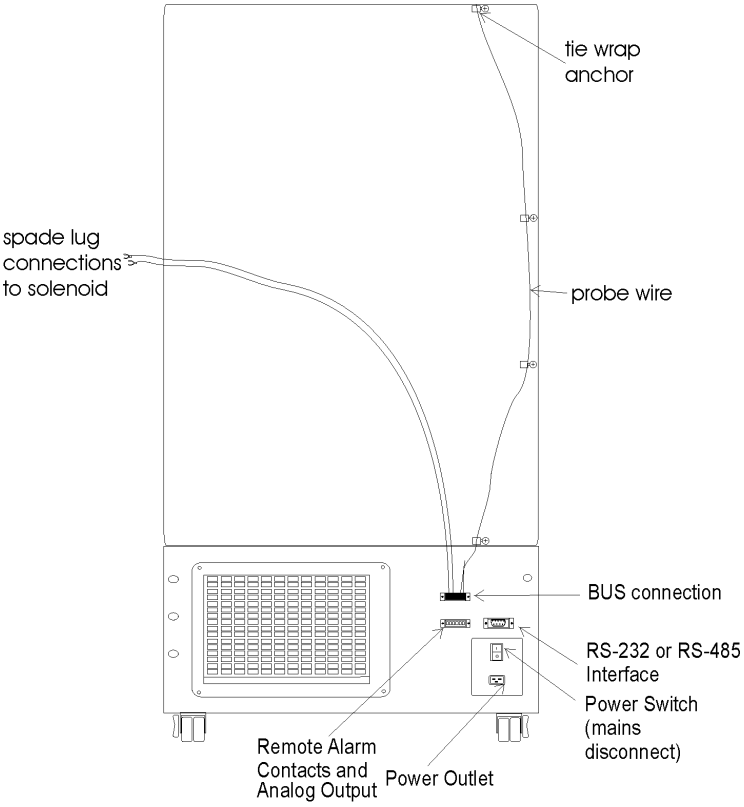

Figure 6-5

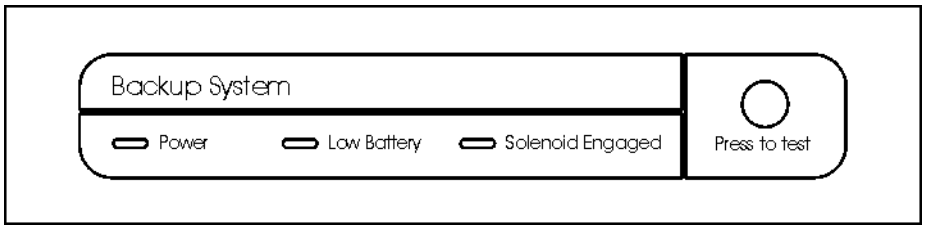

Figure 6-6

d. BUS Control Panel (see figure 6-6)

WARNING! When activated, this unit injects liquid nitrogen or carbon dioxide. Liquid Nitrogen can cause serious freezing (frostbite) if it comes in contact with unprotected skin or eyes. Nitrogen suppresses oxygen levels and may cause suffocation if area is not well ventilated. Refer to Appendix A for the proper handling of liquid LN_2.

Carbon Dioxide gas suppresses oxygen levels and may cause suffocation if area is not well ventilated. Refer to "Handling Liquid CO_2 in Appendix B of this manual.

Power - indicates the unit has AC power and is operational.

Low Battery - battery charge is low. The battery needs replaced.

Solenoid Engaged - BUS is actively injecting gas into the freezer chamber.

Press-To-Test - Activates the solenoid and injects LN_2 or CO_2 into the freezer chamber as long as the button is depressed. The solenoid engaged indicator should light. If the Low Battery indicator lights during the test, replace the BUS battery.

e. Setting the Optional BUS Set Point

The optional back up system is designed to inject CO_2 or LN_2 into the freezer compartment if the temperature rises above back up system set point. To set the BUS set point:

1. Press the Mode key until the Settings indicator lights.
2. Press the right arrow until "BACKUP = -XX" is displayed in the message center.
3. Press the up or down arrow key until the desired BUS set point is displayed.
4. Press Enter to save the setting.
5. Press the Mode key until the Run indicator lights or press the right or left arrow to go to the next or previous parameter.

If no control keys are pressed, the freezer will automatically return to RUN mode after 5 minutes.

The BUS set point must not be any colder than the high temperature alarm set point. (See section 1.6.b). If the back-up system is installed with CO_2, then -65°C is the coldest BUS set point that can be used.

f. System Operation Check

It is advisable to periodically check the operation of the entire system. To check the system:

1. Close the valve at the gas source.
2. Set the freezer temperature 12 - 15°C higher than the normal operating temperature.
3. Listen for the gas valve to open as the freezer temperature rises to the Back-Up unit set point.
4. Check the gas flow by momentarily opening the valve at the gas source.
5. Turn off the flow of gas.
6. Reset the freezer temperature to the normal operating temperature, and allow the temperature to stabilize.
7. When the freezer has stabilized at the operating temperature, open the valve at the gas source.

g. Cleaning the Vent Stack

Routinely check the vent stack for frost or ice build-up. The type of frost that forms in the vent stack is generally very soft and may be easily removed with a bristle brush or soft cloth. if ice build-up has occurred, a complete defrost may occasionally be required. See section 5.4 for freezer defrost instructions.

h. Disconnecting the Fitting Assembly and Transfer Hose

To disconnect the freezer back-up from the gas supply:

1. Close the supply valve.
2. Depress the test button on the Back-Up System control box to remove the gas from the line.
3. Slowly disconnect the fitting assembly from the supply (in the event that any gas remains in the line).

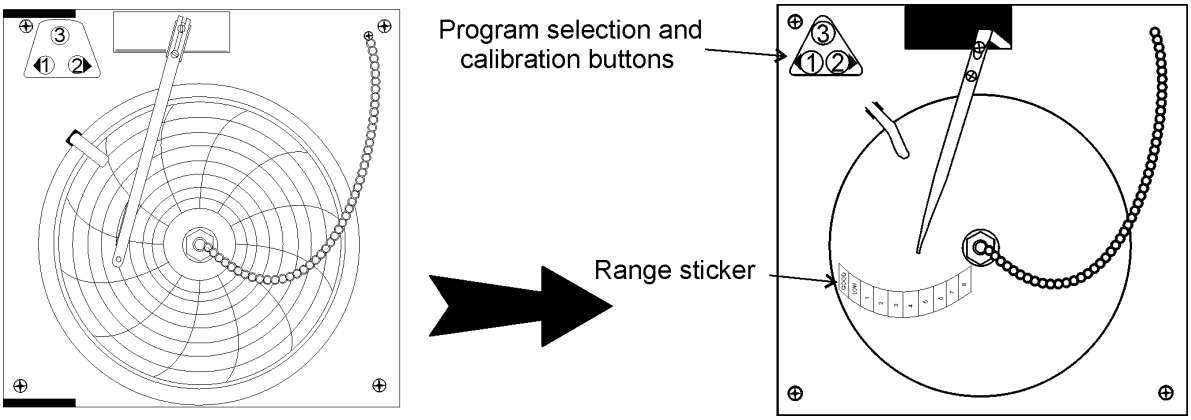

Figure 6-7
Recorder Details

6.2 Chart Recorder

a. Installing the chart paper

1. Open the glass door of the recorder and press button #3 until the pen begins to move outward.
2. Unscrew the knob at the center of the chart and remove the paper.
3. Install the new chart paper, position the paper to the correct time line and replace the knob.
4. Remove the cap from the felt pen and press button #3.

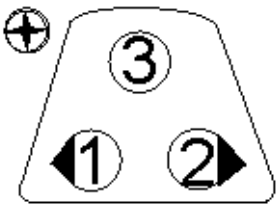

Figure 6-8
Recorder Buttons

b. Recorder Calibration

Changing the recorder range:

The chart recorder contains eight temperature ranges and is factory-programmed for the freezer.

1. Press and hold button #3 until the pen moves off the chart paper.
2. Press and hold for eight seconds button #1.
3. Release the button and the pen will move to the current range on the range sticker.
4. To change the program setting, press the left or right arrows to move the pen within the program ranges.
5. When the pen is located on the desired range, press button #3 to bring the pen arm back onto the chart. Recording will begin in the new program.

Program	From	To
1	-40	30°C
2	0	60°C
3	-100	38°C
4	-5	50°C
5	0	100°C
6	-100	200°C
7	-115	50°C
8	-10	70°C

Calibrating the chart recorder:

The recorder must be in service for 24 hours before performing the following calibration procedure.

1. Place an accurate thermometer in the chamber next to the recorder probe.
2. Temperature probes for the recorder are located in the left front corner of the freezer chamber (Figure 1-4).
3. After about three minutes, compare the thermometer reading with the chart recorder reading.
4. If an adjustment is necessary, press the #1 button to move the pen to the left or the #2 to move the pen to the right. The button must be held about five seconds before the pen begins to move. Release the button when the pen position matches the thermometer.

NOTE: The felt-tip pen on the recorder requires periodic replacement. Usually the ink will appear to fade before replacement becomes necessary. Additional pen tips may be purchased from Thermo Forma. Refer to Parts List, Section 8.

6.3 Datalogger

Thermo Forma dataloggers and ELPRO evaluation software provide monitoring and documentation of temperature and alarm conditions. The dataloggers have a memory capacity of 64,000 measured values or data points. Temperature is measured, stored and displayed. Alarm conditions are recorded. Optional evaluation software permits data to be downloaded to a PC. A variety of statistical information is provided through calculations, analysis, graphs and printed reports. Refer to the ELPRO documentation for operating instructions for the datalogger.

6.4 Water-cooled Condenser (195145, 195611)

The water-cooled condenser is a factory installed option and requires a qualified technician at freezer installation. The installation should include proper adjustment of the regulating valve, which controls the discharge pressure. Specifications for this option are displayed in figure 6-9.

Water Source	**Tower**	**City**
Water Pressure	Not to exceed 150 psig	
Water Temperature Range	Not to exceed 29.4C (85F)	
Inlet Connection	0.5” compression	
Outlet Connection	0.5” compression	
Flow Rate Required	3.0 gallons (11.4 liters) per minute	1.0 gallon (3.8 liters) per minute
Drain Required	No (return line is required)	Yes

Figure 6-9

6.5 Five Inner Door Option (189405, 189406, 189407, 195642)

The five inner door option is factory installed. The freezer is converted to accommodate four adjustable specimen shelves with the fifth “shelf” as the bottom of the freezer chamber.

Specifications - Single Door Units

Model	8602	8603	8604	8605	8606	8607	8627
Temperature Range	-50°C (-58°F) to -86°C (-123°F) in an 18C to 32C* (64.4F to 89.6F) ambient						
Exterior Dimensions	33.3"W x 77.8"Hx31.0" 84.6x197.6x78.7cm	33.3"W x 77.8"Hx31.0" 84.6x197.6x78.7cm	33.3"W x 77.8"Hx37.0" 84.6x197.6x94.0cm	33.3"W x 77.8"Hx37.0" 84.6x197.6x94.0cm	40.8"W x 77.8"Hx37.0" 103.6x197.6x94.0cm	46.8"W x 77.8"Hx37.0" 118.9x197.6x94.0cm	33.3"W x 77.8"Hx31.0" 84.6x197.6x78.7cm
Interior Dimensions	23.0"Wx51.5"Hx19.3" 58.4x130.8x49.0cm	23.0"Wx51.5"Hx19.3" 58.4x130.8x49.0cm	23.0"Wx51.5"Hx25.3" 58.4x130.8x64.3cm	23.0"Wx51.5"Hx25.3" 58.4x130.8x64.3cm	30.6"Wx51.5"Hx25.3" 77.7x130.8x64.3cm	36.6"Wx51.5"Hx27.0" 93.0x130.8x68.6cm	23.0"Wx51.5"Hx19.3" 58.4x130.8x49.0cm
Capacity	13.0 cu. ft. (368.1 liters)	13.0 cu. ft. (368.1 liters)	17.3 cu. ft. (489.9 liters)	17.3 cu. ft. (489.9 liters)	23.0 cu. ft. (651.3 liters)	28.0 cu. ft. (792.8 liters)	13.0 cu. ft. (368.1 liters)
Refrigeration	Two 1 HP (2545 BTUH each)						
Insulation	Non-CFC, foamed-in-place urethane: 5.0" (12.7 cm) cabinet; 4.5" (11.4 cm) door						
Electrical	230V,50/60Hz, 12.0FLA Operating Range: 208VAC-240VAC	120V, 60 Hz, 16.0 FLA Operating Range: 108-130V	120V, 60 Hz, 16.0 FLA Operating Range: 108-130V	230V,50/60Hz, 12.0FLA Operating Range: 208VAC-240VAC	230V,50/60Hz, 12.0FLA Operating Range: 208VAC-240VAC	230V,50/60Hz, 12.0FLA Operating Range: 208VAC-240VAC	230V,50/60Hz, 12.0FLA Operating Range: 208VAC-240VAC
Breaker Requirements	15 amp, 230V, Dedicated Circuit, 15 Amp Time Delay Breaker	20 amp, 120V, Dedicated Circuit, 20 amp Time Delay Breaker	20 amp, 120V, Dedicated Circuit, 20 amp Time Delay Breaker	15 amp, 230V, Dedicated Circuit, 15 Amp Time Delay Breaker	15 amp, 230V, Dedicated Circuit, 15 Amp Time Delay Breaker	15 amp, 230V, Dedicated Circuit, 15 Amp Time Delay Breaker	15 amp, 230V, Dedicated Circuit, 15 Amp Time Delay Breaker
Shipping Weight: Motor	690 lbs. (313.0 kg)	690 lbs. (313.0 kg)	790 lbs. (358.3 kg)	790 lbs. (358.3 kg)	880 lbs. (399.2 kg)	965 lbs. (437.7 kg)	690 lbs. (313.0kg)

Specifications - Double Door Units

Model	8691	8692	8693	8694	8695
Temperature Range	-50°C (-58°F) to -86°C (-123°F) in an 18C to 32C* (64.4F to 89.6F) ambient				
Exterior Dimensions	33.3"W x 77.8"Hx31.0" 84.6x197.6x78.7cm	33.3"W x 77.8"Hx31.0" 84.6x197.6x78.7cm	33.3"W x 77.8"Hx37.0" 84.6x197.6x94.0cm	33.3"W x 77.8"Hx37.0" 84.6x197.6x94.0cm	40.8"W x 77.8"Hx37.0" 103.6x197.6x94.0cm
Interior Dimensions	23.0"Wx51.5"Hx19.3" 58.4x130.8x49.0cm	23.0"Wx51.5"Hx19.3" 58.4x130.8x49.0cm	23.0"Wx51.5"Hx25.3" 58.4x130.8x64.3cm	23.0"Wx51.5"Hx25.3" 58.4x130.8x64.3cm	30.6"Wx51.5"Hx25.3" 103.6x130.8x64.3cm
Capacity	13.0 cu. ft. (368.1 liters)	13.0 cu. ft. (368.1 liters)	17.3 cu. ft. (489.9 liters)	17.3 cu. ft. (489.9 liters)	23.0 cu. ft. (651.3 liters)
Refrigeration	Two 1 HP (2545 BTUH each)				
Insulation	Non-CFC, foamed-in-place urethane: 5.0" (12.7 cm) cabinet; 4.5" (11.4 cm) door				
Electrical	230V,50/60Hz, 12.0FLA Operating Range: 208VAC-240VAC	120V, 60 Hz, 16.0 FLA Operating Range: 108-130V	120V, 60 Hz, 16.0 FLA Operating Range: 108-130V	230V,50/60Hz, 12.0FLA Operating Range: 208VAC-240VAC	230V,50/60Hz, 12.0FLA Operating Range: 208VAC-240VAC
Breaker Requirements	15 amp, 230V, Dedicated Circuit, 15 Amp Time Delay Breaker	20 amp, 120V, Dedicated Circuit, 20 amp Time Delay Breaker	20 amp, 120V, Dedicated Circuit, 20 amp Time Delay Breaker	15 amp, 230V, Dedicated Circuit, 15 Amp Time Delay Breaker	15 amp, 230V, Dedicated Circuit, 15 Amp Time Delay Breaker
Shipping Weight: Motor	710 lbs. (322.1 kg)	710 lbs. (322.1 kg)	810 lbs. (367.4 kg)	810 lbs. (367.4 kg)	880 lbs. (399.2 kg)

*Compressors may not cycle off with cabinet running at -86C in a 32C ambient.

Certifications

Refer to the Declaration of Conformity at the back of this manual

Safety Specifications

Indoor Use Only
Altitude - 2,000 meters
Temperature - 5°C to 40°C
Humidity - 80% RH at or below 31°C, decreasing linearly to 50% RH at 40°C
Mains Supply Fluctuations - Mains supply voltage fluctuations not to exceed ±10% of the nominal voltage
Installation Category II [1]
Pollution Degree 2 [2]
Class of Equipment I

---

1 Installation category (overvoltage category) defines the level of transient overvoltage which the instrument is designed to withstand safely. It depends on the nature of the electricity supply and its overvoltage protection means. For example, in CAT II which is the category used for instruments in installations supplied from a supply comparable to public mains such as hospital and research laboratories and most industrial laboratories, the expected transient overvoltage is 2500V for a 230V supply and 1500V for a 120V supply.

2 Pollution degree describes the amount of conductive pollution present in the operating environment. Pollution degree 2 assumes that normally only non-conductive pollution such as dust occurs with the exception of occasional conductivity caused by condensation.

REV	ECN NO.	DATE	BY	CAD	APPD	DESCRIPTION OF REVISION
0	N/A	12-04-02	PDK	PDK	AKS	RELEASED FOR PRODUCTION

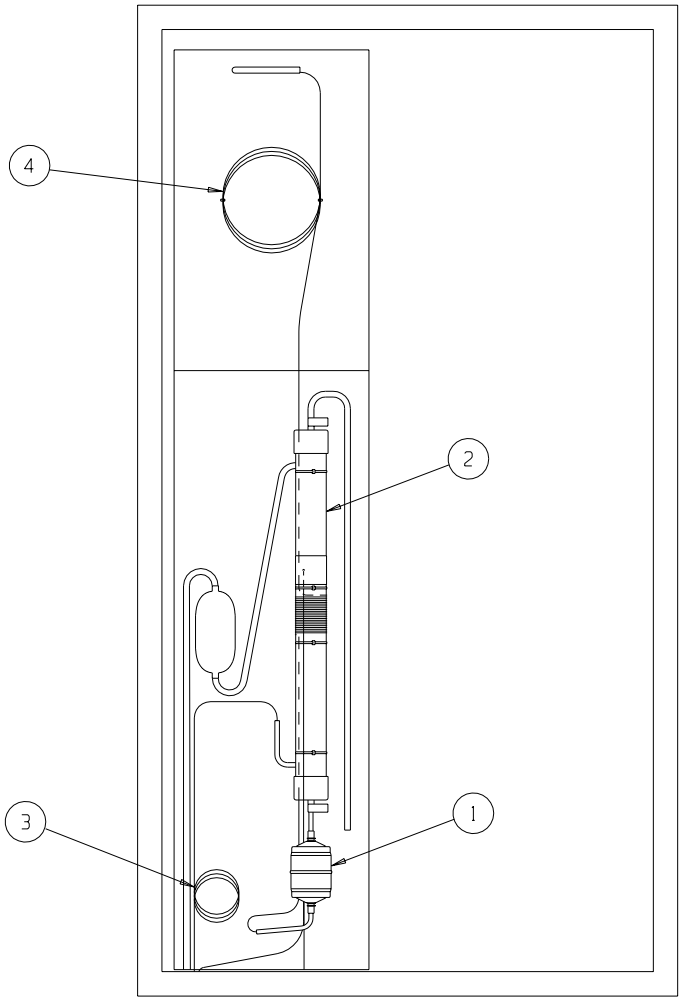

BILL OF MATERIALS		
ITEM NO.	PART NO.	PART DESCRIPTION
1	209016	DRYER
2	211039	HEAT EXCHANGER
3	227927	HIGH STAGE CAP. TUBE
4	227928	LOW STAGE CAP. TUBE

THIS DOCUMENT CONTAINS PROPRIETARY INFORMATION AND SUCH INFORMATION IS NOT TO BE DISCLOSED TO OTHERS FOR ANY PURPOSE NOR USED FOR MANUFACTURING PURPOSES WITHOUT WRITTEN PERMISSION FROM THERMO FORMA

MODEL/PART NAME: 8600 UP-RIGHT FREEZER

DWG TITLE: HEAT EXCHANGER ASSEMBLY

DWN: PDK | CAD: PDK | APPD: | DATE: 12-04-02 | SCALE: NTS

MATERIAL: N/A

PAINT COLOR: N/A

TOLERANCE UNLESS OTHERWISE SPECIFIED

ANGLES: DECIMAL: .XX=± .XXX=±

DRAWING NUMBER 8602-205-1

SIZE B

Upright Freezer Heat Exchanger Assembly

8602-205-1-B Rev. 0

Page 1 of 1

ThermoForma
BOX 649, MARIETTA, OHIO 45750

BILL OF MATERIALS		
ITEM NO.	PART NO.	PART DESCRIPTION
1	20003	1/4-20 X 3/4 SS HH CAP SCREW
2	22053	#8-32 X 1/2 SS PHP SCREW
3	22115	#6-32 X 1/4 SS PHP SCREW
4	23009	#6-32 SS HEX NUT
5	23020	#6 SS FLAT WASHER
6	23021	#8 SS FLAT WASHER
7	23023	1/4 SS FLAT WASHER
8	23043	NYLON FLAT WASHER
9	23044	1/4" NYLON SHOULDER WASHER
10	23062	1/4 SS EXT TOOTH LOCKWASHER
11	23080	#8 SS SPRING LOCKWASHER
12	24032	#8-32 X 3/8 SS PHP SCREW F POINT
13	24041	#6-32 X 1/2 SS PHP SCREW F POINT
14	24042	#8-32 X 1/2 SS PHP SCREW F POINT
15	59008	#8-32 X 7/8 SS PHP SCREW
16	114020	5/8" X 1/2" ID GROMMET
17	116077	FRONT PANEL HINGE
18	116092	EXTERIOR FREEZER DOOR HINGE
19	121069	FREEZER CAM LATCH STRIKE
20	180312	CAM LATCH STRIKE COVER
21	189921	-
22	195169	LATCH TAB
23	195170	13/17 CU. FT. INNER DOOR
24	195866	PROBE GUARD
25	195867	PROBE MOUNT
26	195874	CABINET CABLE COVER PLATE
27	195879	CABINET CABLE BLANK COVER PLATE
28	195900	SINGLE DOOR SWITCH ASSEMBLY
29	285658	BLACK PLASTIC KNOB
30	330010	1/2" SPLIT SNAP BUSHING
31	420308	13 & 17 CU. FT. SINGLE DOOR FRAME GASKET
32	500177	PILSATER STRIPS
33	515083	1/4 DIA. X 1/4L SS SPACER
34	22051	#8-32 X 1/4 SS PHP SCREW
35	22053	#8-32 X 1/2 SS PHP SCREW
36	22115	#6-32 X 1/4 SS PHP SCREW
37	23009	#6-32 SS HEX NUT
38	23010	#8-32 SS HEX NUT
39	23020	#6 SS FLAT WASHER
40	23080	#8 SS SPRING LOCKWASHER
41	120400	BLACK PLASTIC KNOB
42	195511	28 CU. FT. INNER DOOR
43	195602	LATCH TAB
44	116090	FRONT PANEL HINGE

Upright Freezer
Cabinet
Assembly

8602-200-1-B Rev. 0
Page 1 of 2

REV	ECN NO.	DATE	BY	CAD	APPD	DESCRIPTION OF REVISION
0	N/A	11-07-02	PDK	PDK	AKS	RELEASED FOR PRODUCTION

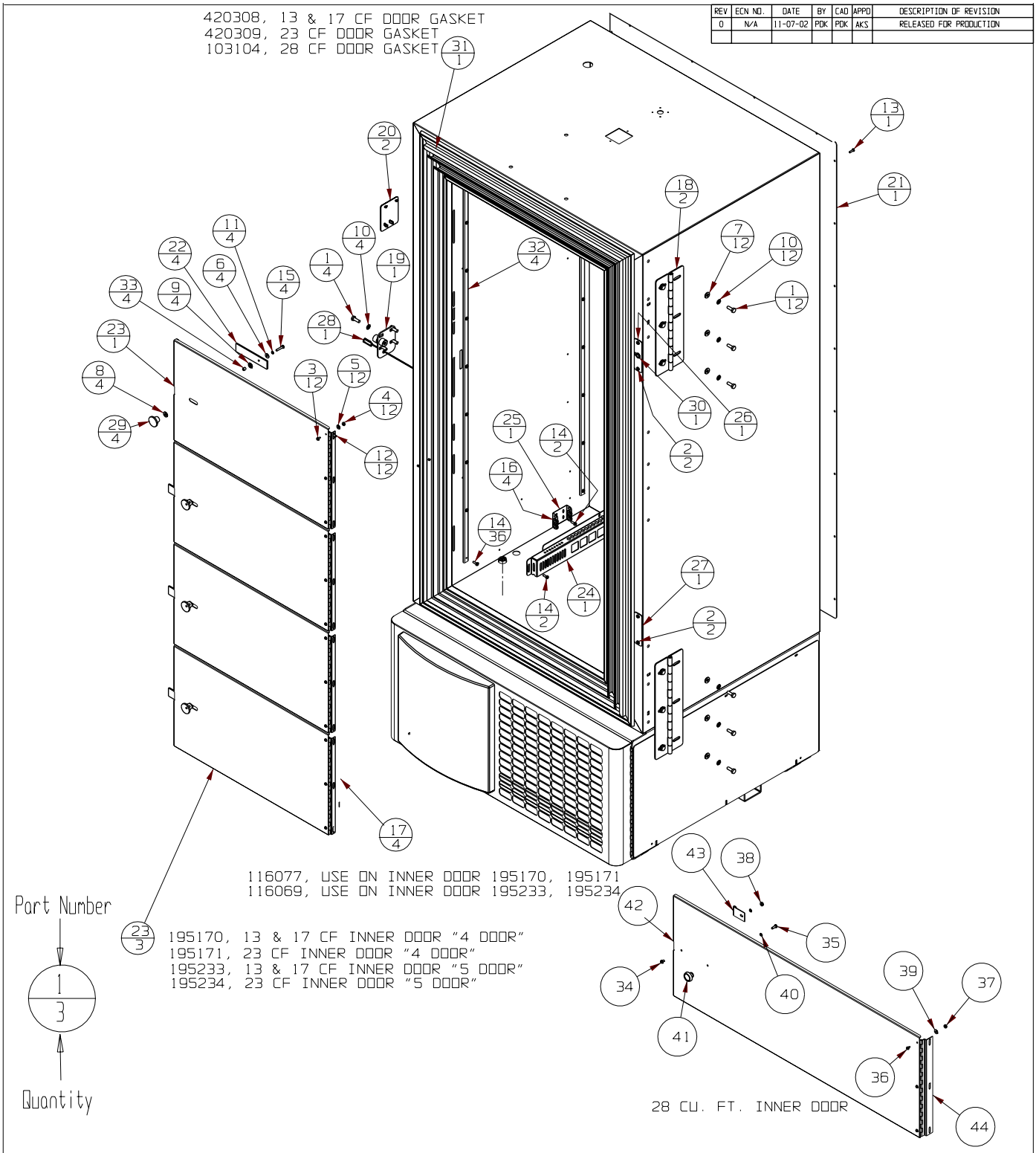

THIS DOCUMENT CONTAINS PROPRIETARY INFORMATION AND SUCH INFORMATION IS NOT TO BE DISCLOSED TO OTHERS FOR ANY PURPOSE NOR USED FOR MANUFACTURING PURPOSE WITHOUT WRITTEN PERMISSION FROM THERMO FORMA	MODEL/PART NAME: 8600 UP-RIGHT FREEZER				Upright Freezer Cabinet Assembly
	DWG TITLE: 8600 UP-RIGHT FREEZER ASSEMBLY				
	DWN: PDK	CAD: PDK	APPD:	DATE: 10-30-02	SCALE: 0.094
	MATERIAL: N/A				
	PAINT: N/A				
	TOLERANCE UNLESS OTHERWISE SPECIFIED ANGLES: DECIMAL: .XX=± .xxx=±		DRAWING NUMBER 8602-200-1	SIZE B	8602-200-1-B Rev. 0 Page 2 of 2

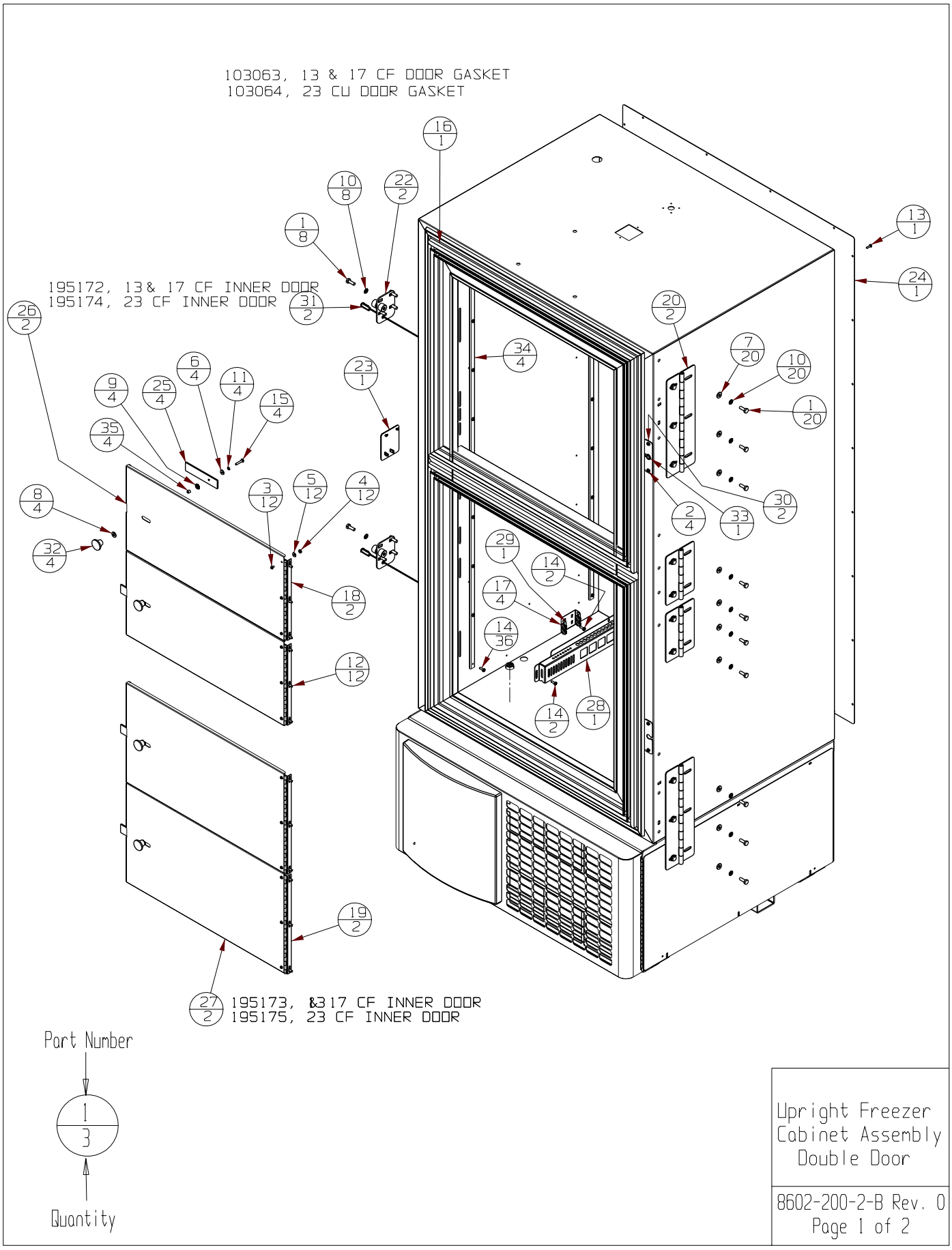
103063, 13 & 17 CF DOOR GASKET
103064, 23 CU DOOR GASKET
195172, 13& 17 CF INNER DOOR
195174, 23 CF INNER DOOR
195173, &317 CF INNER DOOR
195175, 23 CF INNER DOOR
Part Number
Quantity
Upright Freezer
Cabinet Assembly
Double Door
8602-200-2-B Rev. 0
Page 1 of 2

REV	ECN NO.	DATE	BY	CAD	APPD	DESCRIPTION OF REVISION
0	N/A	11-07-02	PDK	PDK	AKS	RELEASED FOR PRODUCTION

BILL OF MATERIALS

ITEM NO.	PART NO.	PART DESCRIPTION
1	20003	1/4-20 X 3/4 SS HH CAP SCREW
2	22053	#8-32 X 1/2 SS PHP SCREW
3	22115	#6-32 X 1/4 SS PHP SCREW
4	23009	#6-32 SS HEX NUT
5	23020	#6 SS FLAT WASHER
6	23021	#8 SS FLAT WASHER
7	23023	1/4 SS FLAT WASHER
8	23043	NYLON FLAT WASHER
9	23044	1/4" NYLON SHOULDER WASHER
10	23062	1/4 SS EXT TOOTH LOCKWASHER
11	23080	#8 SS SPRING LOCKWASHER
12	24032	#8-32 X 3/8 SS PHP SCREW F POINT
13	24041	#6-32 X 1/2 SS PHP SCREW F POINT
14	24042	#8-32 X 1/2 SS PHP SCREW F POINT
15	59008	#8-32 X 7/8 SS PHP SCREW
16	103063	DOUBLE DOOR FRAME GASKET
17	114020	5/8" X 1/2" ID GROMMET
18	116069	FRONT PANEL HINGE
19	116077	FRONT PANEL HINGE
20	116092	EXTERIOR FREEZER DOOR HINGE
21	116093	EXTERIOR FREEZER DOOR HINGE
22	121069	FREEZER CAM LATCH STRIKE
23	180312	CAM LATCH STRIKE COVER
24	189921	-
25	195169	LATCH TAB
26	195172	13/17 CU. FT. INNER DOOR, TOP
27	195173	23 CU. FT. INNER DOOR, TOP
28	195866	PROBE GUARD
29	195867	PROBE MOUNT
30	195874	CABINET CABLE COVER PLATE
31	195900	SINGLE DOOR SWITCH ASSEMBLY
32	285658	BLACK PLASTIC KNOB
33	330010	1/2" SPLIT SNAP BUSHING
34	500177	PILSATER STRIPS
35	515083	1/4 DIA. X 1/4L SS SPACER

THIS DOCUMENT CONTAINS PROPRIETARY INFORMATION AND SUCH INFORMATION IS NOT TO BE DISCLOSED TO OTHERS FOR ANY PURPOSE NOR USED FOR MANUFACTURING PURPOSE WITHOUT WRITTEN PERMISSION FROM THERMO FORMA

MODEL/PART NAME: 8600 UP-RIGHT FREEZER

DWG TITLE: 8600 UP-RIGHT FREEZER ASSEMBLY

DWN: PDK | CAD: PDK | APPD: | DATE: 10-30-02 | SCALE: 0.094

MATERIAL: N/A

PAINT: N/A

TOLERANCE UNLESS OTHERWISE SPECIFIED
ANGLES: DECIMAL: .XX=±
.xxx=±

DRAWING NUMBER 8602-200-2

SIZE B

Upright Freezer Cabinet Assembly Double Door

8602-200-2-B Rev. 0
Page 2 of 2

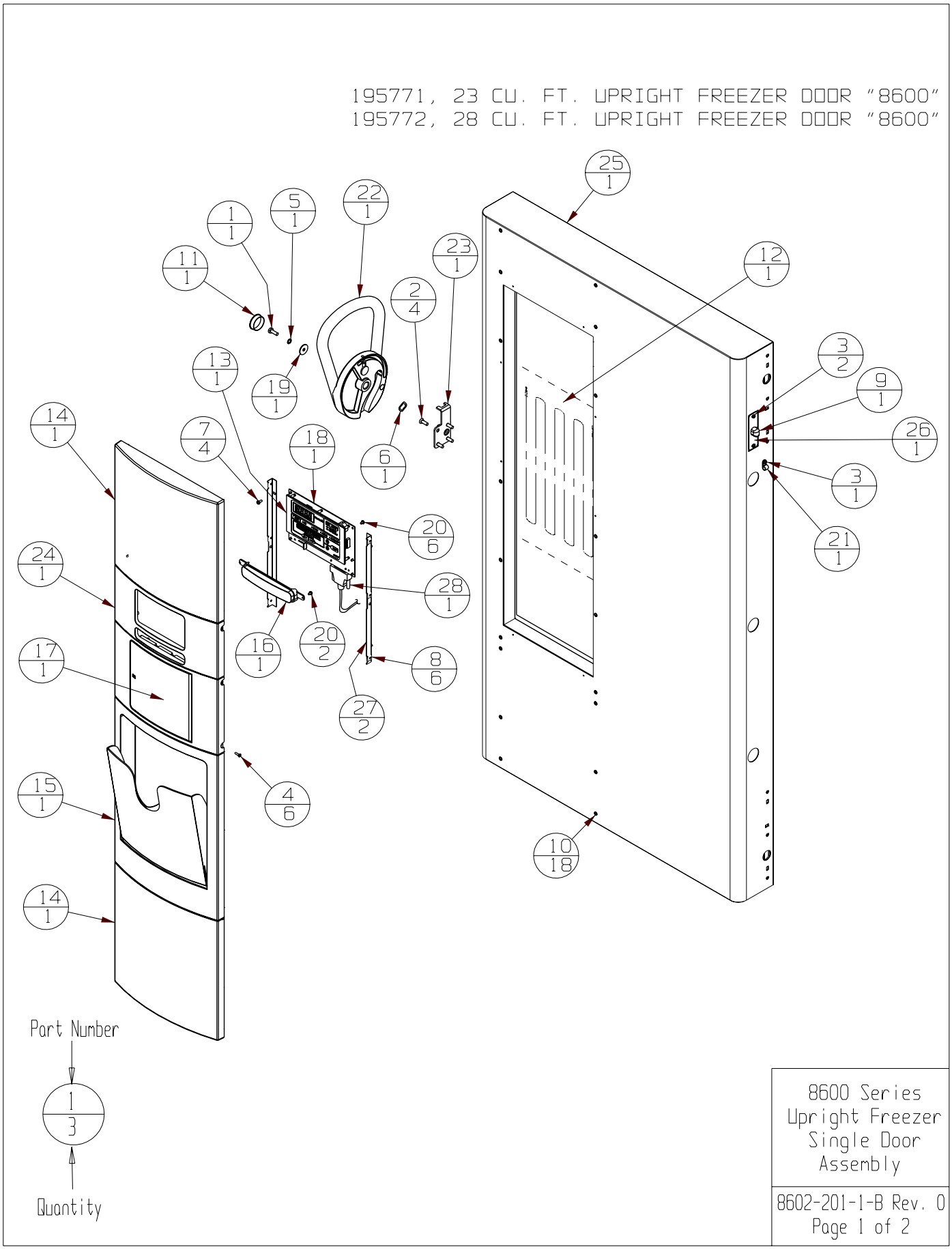
195771, 23 CU. FT. UPRIGHT FREEZER DOOR "8600"
195772, 28 CU. FT. UPRIGHT FREEZER DOOR "8600"
25 1
22 1
5 1
1 1
11 1
23 1
12 1
2 4
3 2
9 1
13 1
19 1
26 1
14 1
7 4
18 1
6 1
3 1
20 6
21 1
24 1
28 1
16 1
20 2
8 6
17 1
27 2
15 1
4 6
10 18
14 1
Part Number
1 3
Quantity
8600 Series
Upright Freezer
Single Door
Assembly
8602-201-1-B Rev. 0
Page 1 of 2

REV	ECN NO.	DATE	BY	CAD	APPD	DESCRIPTION OF REVISION
0	N/A	10-30-02	PDK	PDK	AKS	RELEASED FOR PRODUCTION

BILL OF MATERIALS

ITEM NO.	PART NO.	PART DESCRIPTION
1	20003	1/4-20 X 3/4 SS HH CAP SCREW
2	20058	#1/4-20 X 3/4 SS FHP UC SCREW
3	22053	#8-32 X 1/2 SS PHP SCREW
4	22058	#6-32 X 1/2 BLACK OXIDE PHP SCREW
5	23033	1/4 SS INTERNAL TOOTH LOCK WASHER
6	23057	5/8 WAVE WASHER
7	24032	#8-32 X 3/8 SS PHP SCREW F POINT
8	25040	#6 U SPEED NUT STL. STL.
9	30033	RIGHT ANGLE STRAIN RELIEF
10	111028	TINNERMAN TUBULAR SPEED CLIP
11	117038	1-3/8" DIA. THERMO WHITE HOLE PLUG
12	132115	HEATER, 5W, 14VDC
13	140309	HI-END CONTROL PANEL
14	180301	CONTROL CENTER BLANK PANEL
15	180304	DATA STORAGE POCKET ASSEMBLY
16	180306	BACK-UP SYSTEM BLANK PANEL
17	180308	CONTROL CENTER RECORDER BLANK
18	191659	FREEZER DISPLAY BOARD
19	510305	1" OD FLAT WASHER
20	590027	#6-32 X 1/4 SS PHP EXT SEMS SCREW
21	600085	5/16 NYLON CABLE CLAMP
22	121068	FINISHED FREEZER HANDLE/LATCH ASSY.
23	121070	CAM LATCH MOUNT
24	180305	CONTROL CENTER DISPLAY BEZEL
25	195770	13 & 17 CU. FT. UPRIGHT FREEZER DOOR "8600"
26	195830	UPRIGHT DOOR WIREWAY COVER PLATE
27	195837	MOUNTING ANGLE FOR 180305
28	430336	15 FT, RS-232 CABLE 25 POS.

THIS DOCUMENT CONTAINS PROPRIETARY INFORMATION AND SUCH INFORMATION IS NOT TO BE DISCLOSED TO OTHERS FOR ANY PURPOSE NOR USED FOR MANUFACTURING PURPOSE WITHOUT WRITTEN PERMISSION FROM THERMO FORMA

MODEL/PART NAME: ULT UP-RIGHT SERIES FREEZER

DWG TITLE: 8600 SINGLE DOOR BOM ASSEMBLY

DWN: PDK | CAD: PDK | APPD: | DATE: 10-30-02 | SCALE: 0.094

MATERIAL: N/A

PAINT: N/A

TOLERANCE UNLESS OTHERWISE SPECIFIED
ANGLES: DECIMAL: .XX=±
.xxx=±

DRAWING NUMBER 8602-201-1

SIZE B

8600 Series Upright Freezer Single Door Assembly

8602-201-1-B Rev. 0
Page 2 of 2

BILL OF MATERIALS		
ITEM NO.	PART NO.	PART DESCRIPTION
1	20003	1/4-20 X 3/4 SS HH CAP SCREW
2	20058	#1/4-20 X 3/4 SS FHP UC SCREW
3	22053	#8-32 X 1/2 SS PHP SCREW
4	22058	#6-32 X 1/2 BLACK OXIDE PHP SCREW
5	23033	1/4 SS INTERNAL TOOTH LOCK WASHER
6	23057	5/8 WAVE WASHER
7	24032	#8-32 X 3/8 SS PHP SCREW F POINT
8	25040	#6 U SPEED NUT STL. STL.
9	30033	RIGHT ANGLE STRAIN RELIEF
10	111028	TINNERMAN TUBULAR SPEED CLIP
11	117038	1-3/8" DIA. THERMO WHITE HOLE PLUG
12	132114	HEATER, 3W, 14VDC
13	140309	HI-END CONTROL PANEL
14	180301	CONTROL CENTER BLANK PANEL
15	180304	DATA STORAGE POCKET ASSEMBLY
16	180306	BACK-UP SYSTEM BLANK PANEL
17	180308	CONTROL CENTER RECORDER BLANK
18	191659	FREEZER DISPLAY BOARD
19	195874	CABINET CABLE COVER PLATE
20	330010	1/2" SPLIT SNAP BUSHING
21	510305	1" OD FLAT WASHER
22	590027	#6-32 X 1/4 SS PHP EXT SEMS SCREW
23	600085	5/16 NYLON CABLE CLAMP
24	121068	FINISHED FREEZER HANDLE/LATCH ASSY.
25	121070	CAM LATCH MOUNT
26	180305	CONTROL CENTER DISPLAY BEZEL
27	195785	13/17 CF TOP DOUBLE DOOR "8600/900"
28	195786	13/17 CF BOTTOM DOUBLE DOOR "8600"
29	195830	UPRIGHT DOOR WIREWAY COVER PLATE
30	195837	MOUNTING ANGLE FOR 180305
31	430336	15 FT, RS-232 CABLE 25 POS.

8600 Series
Double Door
Assembly
Upright Freezer

8602-202-1-B Rev. 0
Page 1 of 2

REV	ECN NO.	DATE	BY	CAD	APPD	DESCRIPTION OF REVISION
0	N/A	11-05-02	PDK	PDK	AKS	RELEASED FOR PRODUCTION

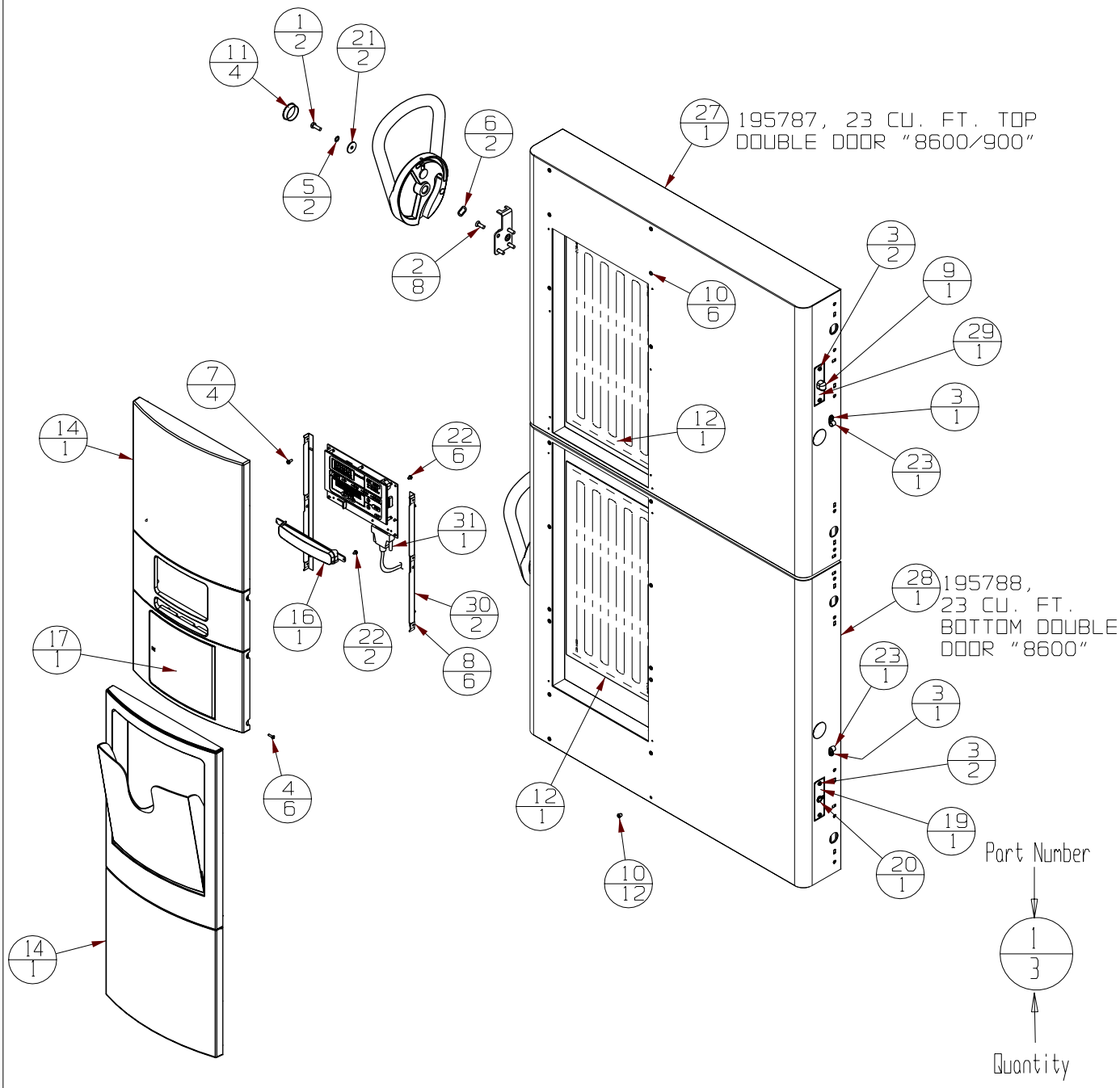

THIS DOCUMENT CONTAINS PROPRIETARY INFORMATION AND SUCH INFORMATION IS NOT TO BE DISCLOSED TO OTHERS FOR ANY PURPOSE NOR USED FOR MANUFACTURING PURPOSE WITHOUT WRITTEN PERMISSION FROM THERMO FORMA	MODEL/PART NAME: ULT UP-RIGHT SERIES FREEZER				8600 Series Double Door Assembly Upright Freezer
	DWG TITLE: 8600 DOUBLE DOOR BOM ASSEMBLY				
	DWN: PDK	CAD: PDK	APPD:	DATE: 11-05-02	SCALE: 0.094
	MATERIAL: N/A				
	PAINT: N/A				
	TOLERANCE UNLESS OTHERWISE SPECIFIED ANGLES: DECIMAL: .XX=± .xxx=±	DRAWING NUMBER 8602-202-1		SIZE B	8602-202-1-B Rev. 0 Page 2 of 2

BILL OF MATERIALS		
ITEM NO.	PART NO.	PART DESCRIPTION
1	23002	#8-32 ZP LKWASH HEX NUT
2	23011	1/4-20 ZP LKWASH HEX NUT
3	23013	3/8-16 ZP LKWASH HEX NUT
4	24030	#8 X 1/2" TEKS SCREW
5	24032	#8-32 X 3/8 SS PHP SCREW F POINT
6	24038	1/4-20 X 1/2 SELF TAPPING SCREW
7	30016	1" SNAP BUSHING
8	108020	10" WIRE FAN GUARD
9	111028	TINNERMAN TUBULAR SPEED CLIP
10	114024	COMPRESSOR MOUNTING UPPER RUBBER SPACER
11	114025	COMPRESSOR MOUNTING LOWER RUBBER SPACER
12	114026	COMPRESSOR MOUNTING SLEEVE
13	115032	BLACK ABS PLASTIC PULL
14	116115	FRONT PANEL HINGE
15	120011	DUAL WHEEL CASTER
16	180301	CONTROL CENTER BLANK PANEL
17	191385	FILTER HOLD DOWN ROD
18	195153	VACUUM RELIEF HEATER 120V
19	195874	CABINET CABLE COVER PLATE
20	200126	2" RIGID HANGER
21	203031	230V HIGH STAGE COMPRESSOR
22	203032	230V LOW STAGE COMPRESSOR
23	204009	REFRIGERATION CONDENSER
24	209020	DRYER
25	214006	AC&R Oil Seperator
26	214018	10.000" H X 5.000" DIA. EXPANSION TANK
27	220626	120V - 50/60 HZ SOLENOID VALVE
28	330002	5/8" SNAP BUSHING
29	330010	1/2" SPLIT SNAP BUSHING
30	360248	MINI SNAP-IN POWER SWITCH
31	400159	SEALED LEAD ACID BATTERY - 12 VOLT - 7.2 Ah
32	510035	#12-24 X 1/2 SS HH CAP SCREW
33	510305	1" OD FLAT WASHER
34	550043	1/4-20 X 1"L ZP CARRIAGE BOLT
35	590020	#8-32 X 3/8 SS PHP EXT SEMS SCREW
36	590029	#8-32 X 3/8 SS PHP EXT SEMS SCREW W/PATCH
37	600080	1/4 ALUM CLAMP W/LINER
38	610009	1/4-20 S.S. WING NUT
39	610053	3/8-16 NYLON INSERT LOCK NUT
40	680014	1/4-20 X 2-1/4 SELF TAPPING SCREW
41	680015	#8 x 1" TEKS SCREW
42	730087	#12 SS EXT TOOTH LOCKWASHER
43	760203	AIR FILTER
44	900113	10" TUBEAXIAL FAN, 115V
45	114027	COMPRESSOR MOUNTING SPRING
46	121071	LATCH CATCH, PART OF 121071 ASSEMBLY
47	121071	LATCH KEEPER, PART OF 121071 ASSEMBLY
48	195706	HEATER SHIM
49	195746	13&17 CU. FT. UR FRZ BASE FRONT PNL,760&8600
50	195768	BATTERY MOUNT TOP
51	195799	SIDE PANEL 17, 23 AND 28 CU. FT. UPRIGHT
52	195802	13/17 REAR ACCESS GRILLE
53	195829	MULLION/DOOR SWITCH WIRE COVER
54	195844	UR FRZ FAN BULKHEAD
55	195845	13&17 CU. FT. FAN BULKHEAD SUPPORT
56	195882	REFRIGERATION LINE SUPPORT BRACKET

Exploded Parts
Model:
8600 Series
Upright Freezers

8602-203-1-B REV. 0
Page 1 of 2

REV	ECN NO.	DATE	BY	CAD	APPD	DESCRIPTION OF REVISION
0	N/A	11-26-02	PDK	PDK	AKS	RELEASED FOR PRODUCTION

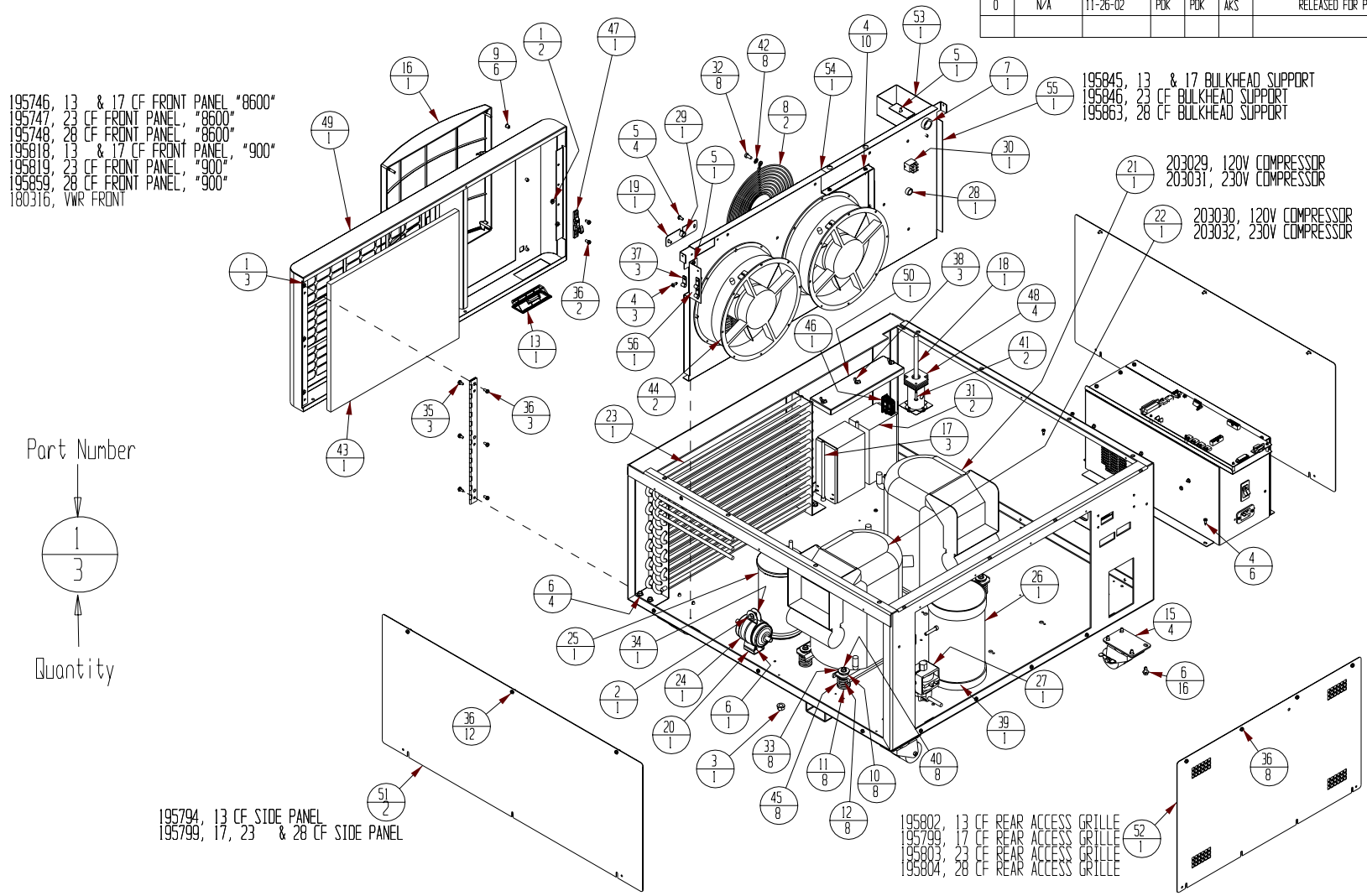

THIS DOCUMENT CONTAINS PROPRIETARY INFORMATION AND SUCH INFORMATION IS NOT TO BE DISCLOSED TO OTHERS FOR ANY PURPOSE NOR USED FOR MANUFACTURING PURPOSE WITHOUT WRITTEN PERMISSION FROM THERMO FORMA

MODEL/PART NAME: 8600 UP-RIGHT FREEZER

DWG TITLE: 8600 UP-RIGHT FREEZER ASSEMBLY

DWN: PDK | CAD: PDK | APPD: | DATE: 10-30-02 | SCALE: 0.094

MATERIAL: N/A

PAINT: N/A

TOLERANCE UNLESS OTHERWISE SPECIFIED
ANGLES: DECIMAL: .XX=±
.XXX=±

DRAWING NUMBER: 8602-203-1

SIZE: B

Exploded Parts
Model:
8600 Series
Upright Freezers

8602-203-1-B REV. 0
Page 2 of 2

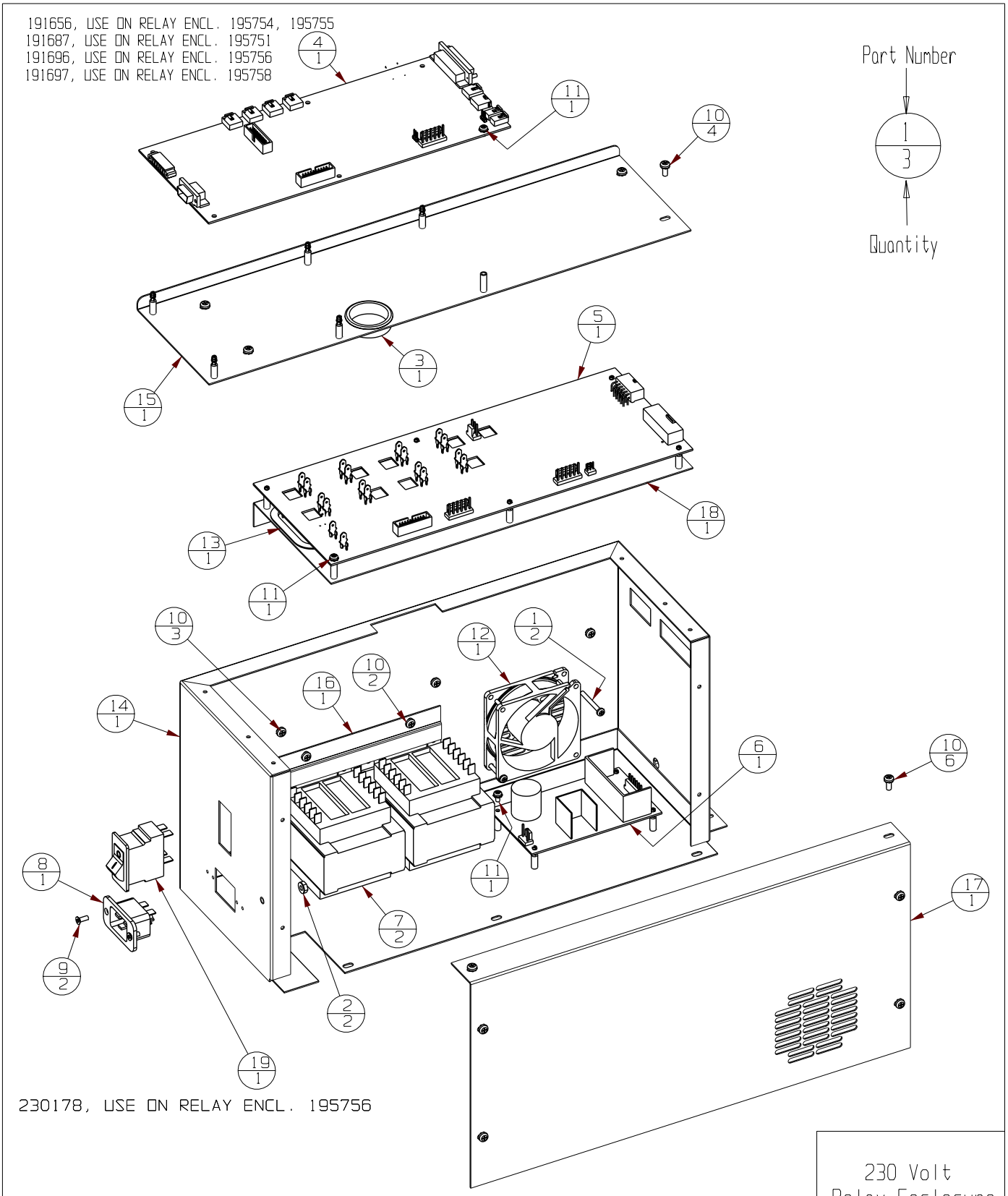

1. COMMON TO: 195751, 195754, 195755, 195756, 195758

230 Volt
Relay Enclosure
Assembly

8602-204-1-B Rev. 0
Page 1 of 2

REV	ECN NO.	DATE	BY	CAD	APPD	DESCRIPTION OF REVISION
0	N/A	12-02-02	PDK	PDK	AKS	RELEASED FOR PRODUCTION

BILL OF MATERIALS

ITEM NO.	PART NO.	PART DESCRIPTION
1	22127	6-32 x1.250 SS PHP SCREW
2	23002	#8-32 ZP LKWASH HEX NUT
3	30077	1-1/2" SNAP BUSHING
4	191656	MICRO BOARD (-86 HIGH END)
5	191658	HIGH VOLTAGE BOARD 230V
6	400165	SWITCHER BOARD
7	420090	175V TRANSFORMER
8	460169	POWER INLET, 16/20A
9	490009	#6-32 X 3/8 SS FHP UC SCREW
10	590020	#8-32 X 3/8 SS PHP EXT SEMS SCREW
11	590027	#6-32 X 1/4 SS PHP EXT SEMS SCREW
12	900134	TUBEAXIAL FAN, 30 CFM, 12V
13	114031	FLEXIBLE GROMMET EDGING
14	195631-16-1	RELAY ENCLOSURE SPOTWELD SUB-ASSEMBLY
15	195631-16-4	RELAY ENCLOSURE COVER/191656 SUPPORT
16	195631-31-3	TRANSFORMER HOLD DOWN
17	195631-31-5	RELAY ENCLOSURE COVER (MAIN)
18	195730-16-1	191658 SUPPORT BRACKET SUB-ASSEMBLY
19	230184	DPDT RKR CB/SWITCH

THIS DOCUMENT CONTAINS PROPRIETARY INFORMATION AND SUCH INFORMATION IS NOT TO BE DISCLOSED TO OTHERS FOR ANY PURPOSE NOR USED FOR MANUFACTURING PURPOSE WITHOUT WRITTEN PERMISSION FROM THERMO FORMA

MODEL/PART NAME: RELAY ENCLOSURE ASSEMBLY

DWG TITLE: 230 VOLT RELAY ENCLOSURE ASSY (HIGH END)

DWN: DHG | CAD: DHG | APPD: | DATE: 07-26-01 | SCALE: 0.250

MATERIAL: -

PAINT: N/A

TOLERANCE UNLESS OTHERWISE SPECIFIED
ANGLES: DECIMAL: .XX=± .xxx=±

DRAWING NUMBER 8602-204-1

SIZE B

230 Volt Relay Enclosure Assembly

8602-204-1-B Rev. 0
Page 2 of 2

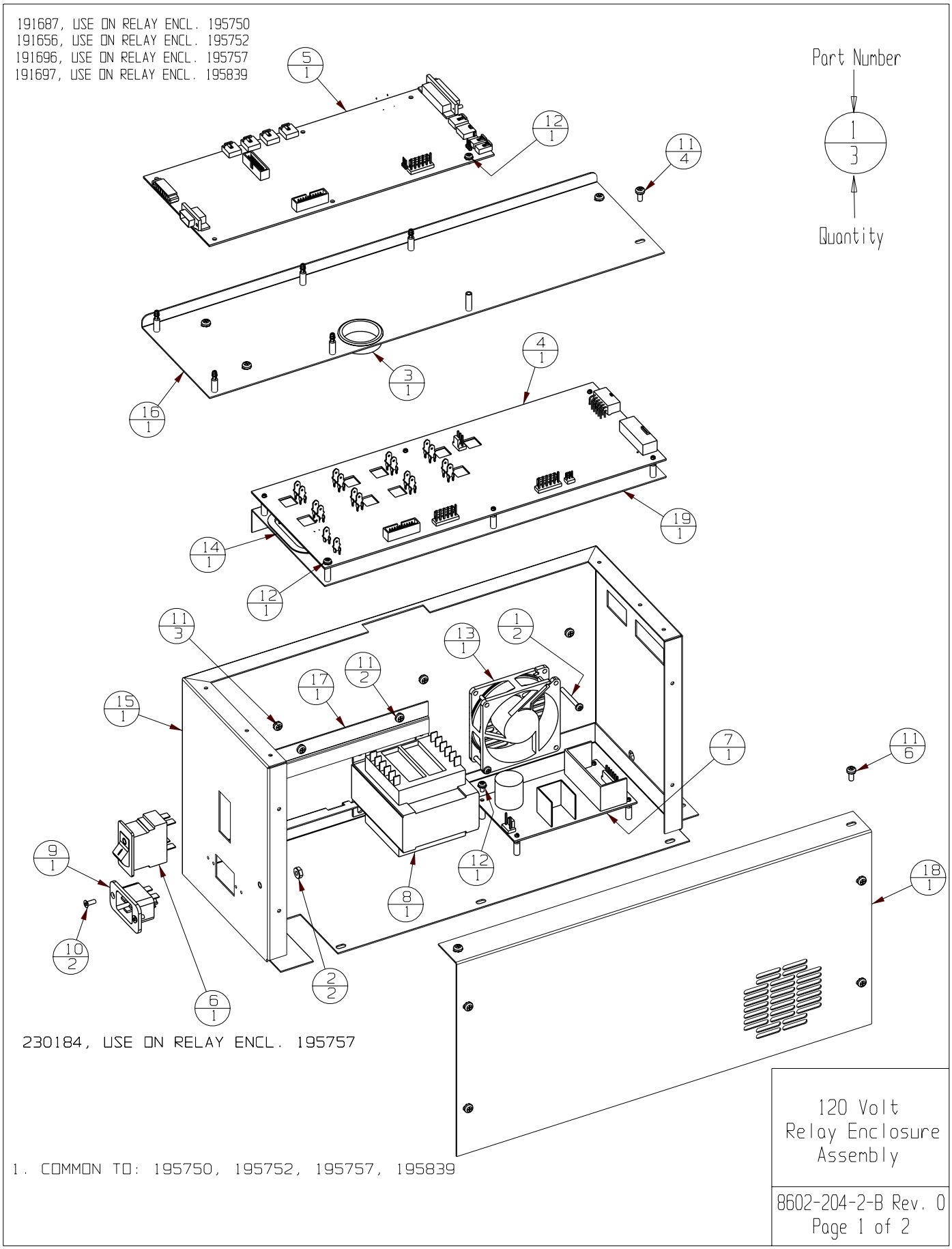

1. COMMON TO: 195750, 195752, 195757, 195839

120 Volt
Relay Enclosure
Assembly

8602-204-2-B Rev. 0
Page 1 of 2

REV	ECN NO.	DATE	BY	CAD	APPD	DESCRIPTION OF REVISION
0	N/A	12-02-02	PDK	PDK	AKS	RELEASED FOR PRODUCTION

BILL OF MATERIALS

ITEM NO.	PART NO.	PART DESCRIPTION
1	22127	6-32 x1.250 SS PHP SCREW
2	23002	#8-32 ZP LKWASH HEX NUT
3	30077	1-1/2" SNAP BUSHING
4	191680	HIGH VOLTAGE BOARD 120V
5	191687	MICRO BOARD (-86 LOW END)
6	230183	DPDT RKR CB/SWITCH
7	400165	SWITCHER BOARD
8	420065	175V TRANSFORMER
9	460169	POWER INLET, 16/20A
10	490009	#6-32 X 3/8 SS FHP UC SCREW
11	590020	#8-32 X 3/8 SS PHP EXT SEMS SCREW
12	590027	#6-32 X 1/4 SS PHP EXT SEMS SCREW
13	900134	TUBEAXIAL FAN, 30 CFM, 12V
14	114031	FLEXIBLE GROMMET EDGING
15	195631-16-1	RELAY ENCLOSURE SPOTWELD SUB-ASSEMBLY
16	195631-16-4	RELAY ENCLOSURE COVER/191656 SUPPORT
17	195631-31-3	TRANSFORMER HOLD DOWN
18	195631-31-5	RELAY ENCLOSURE COVER (MAIN)
19	195730-16-1	191658 SUPPORT BRACKET SUB-ASSEMBLY

THIS DOCUMENT CONTAINS PROPRIETARY INFORMATION AND SUCH INFORMATION IS NOT TO BE DISCLOSED TO OTHERS FOR ANY PURPOSE NOR USED FOR MANUFACTURING PURPOSE WITHOUT WRITTEN PERMISSION FROM THERMO FORMA

MODEL/PART NAME: RELAY ENCLOSURE ASSEMBLY

DWG TITLE: 120 VOLT RELAY ENCLOSURE ASSY

DWN: DHG | CAD:DHG | APPD: | DATE:07-26-01 | SCALE 0.250

MATERIAL-:

PAINT N/A

TOLERANCE UNLESS OTHERWISE SPECIFIED
ANGLES: DECIMAL: .XX=±
.xxx=±

DRAWING NUMBER 8602-204-2

SIZE B

120 Volt Relay Enclosure Assembly

8602-204-2-B Rev. 0
Page 2 of 2

REV	ECN NO.	DATE	BY	CAD	APPD	DESCRIPTION OF REVISION
0	N/A	12-04-02	PDK	PDK	AKS	RELEASED FOR PRODUCTION

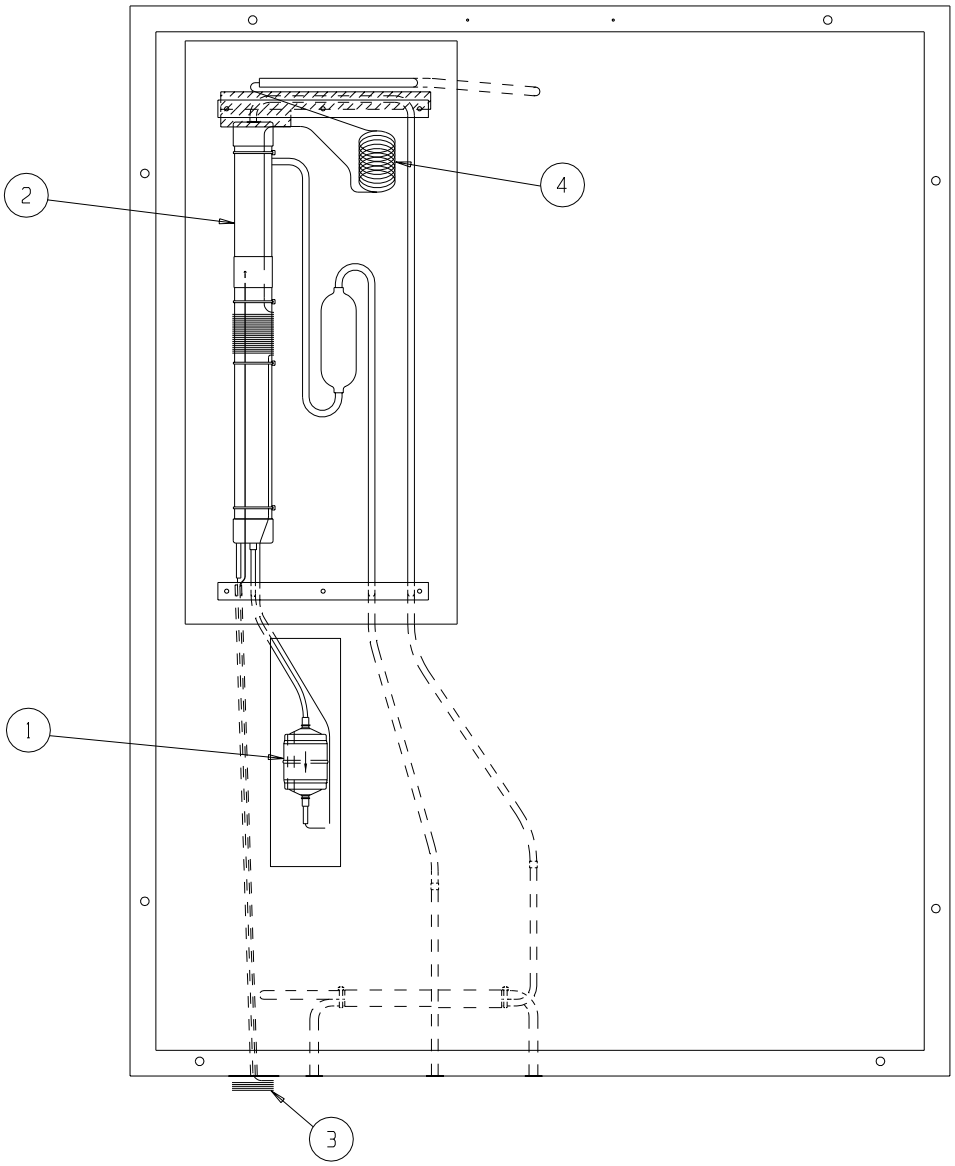

BILL OF MATERIALS		
ITEM NO.	PART NO.	PART DESCRIPTION
1	209016	DRYER
2	211041	HEAT EXCHANGER
3	227927	HIGH STAGE CAP. TUBE
4	227928	LOW STAGE CAP. TUBE

THIS DOCUMENT CONTAINS PROPRIETARY INFORMATION AND SUCH INFORMATION IS NOT TO BE DISCLOSED TO OTHERS FOR ANY PURPOSE NOR USED FOR MANUFACTURING PURPOSES WITHOUT WRITTEN PERMISSION FROM THERMO FORMA

MODEL/PART NAME: 8600 UP-RIGHT FREEZER

DWG TITLE: 28 CF HEAT EXCHANGER ASSEMBLY

DWN: PDK | CAD: PDK | APPD: | DATE: 12-04-02 | SCALE: NTS

MATERIAL: N/A

PAINT COLOR: N/A

TOLERANCE UNLESS OTHERWISE SPECIFIED
ANGLES: DECIMAL: .XX=± .XXX=±

DRAWING NUMBER 8602-205-2

SIZE B

28 cu. ft. Upright Freezer Heat Exchanger Assembly

8602-205-2-B Rev. 0
Page 1 of 1

Thermo Forma
BOX 649, MARIETTA, OHIO 45750

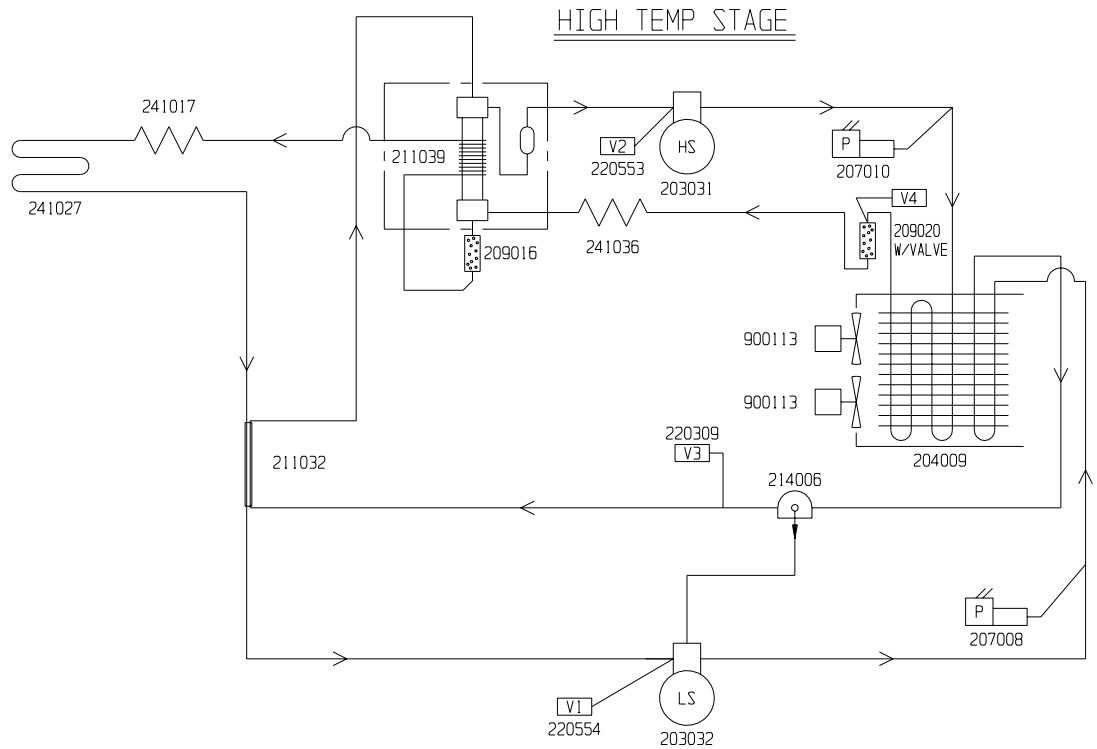

CASCADE REFRIGERATION

HIGH TEMPERATURE STAGE REFRIGERANT:

13 CUFT UNITS: R-404A 24 OZ. (680g) ±1/2 OZ (14g)

HIGH TEMPERATURE STAGE OIL: MOBILE EAL ARCTIC 22CC POLYOL ESTER OIL
COMPRESSOR, 24 OZ.(710ml)

LOW TEMPERATURE STAGE REFRIGERANT:

13 CUFT UNITS: R-290 0.5 OZ. (14g) MAX, ; VAC TO 20"
R-508B 13 OZ (369g) ± 1/4 OZ.(7g) OR
20" TO 147 PSIG ± 3 PSIG

LOW TEMPERATURE STAGE OIL: ZEROL 150T WITH 2% ADDITIVE
COMPRESSOR: 24 OZ.(710ml)
OIL SEPARATOR: 15 OZ. (444ml)

* ALL PSIG MEASUREMENTS WHEN SYSTEM IS AT 23°C

1. COMMON TO: 702, 902, 991, 8602, 8627, 8691, 5702 & 5602 13 CU. FT. FREEZERS (230 V)

THIS DOCUMENT CONTAINS PROPRIETARY INFORMATION AND SUCH INFORMATION IS NOT TO BE DISCLOSED TO OTHERS FOR ANY PURPOSE NOR USED FOR MANUFACTURING PURPOSES WITHOUT WRITTEN PERMISSION FROM THERMO FORMA

REV	ECR NO.	DATE	BY	CAD	APPD	DESCRIPTION OF REVISION
2	N/A	01-07-03	MAH	PDK	MAH	CORRECTED COMPRESSOR STOCK NUMBERS
1	FR-1664	12-17-02	MAH	KDG	MAH	CHANGED 900111 FANS TO 900113
0	N/A	07-22-02	MAH	KDG	MAH	RELEASED FOR PRODUCTION

DATE 05-14-02 | DWN MAH | CAD KDG | APPD MAH | SCALE NONE

CUSTOMER

JOB TITLE -86°C 13 CU. FT. UPRIGHT FREEZERS (230 V)

DWG TITLE REFRIGERATION SCHEMATIC

LOCATION | JOB NUMBER | DRAWING NUMBER 8602-90-0-B

Thermo Forma
BOX 649, MARIETTA, OHIO 45750

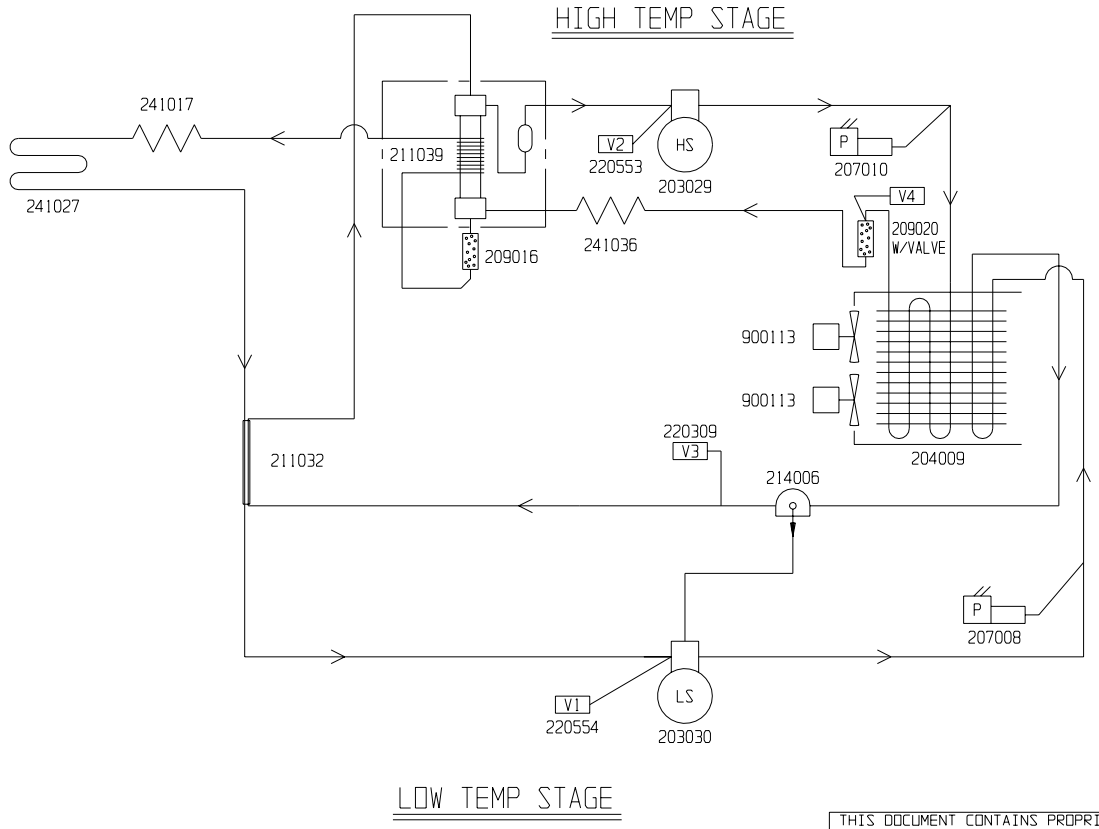

CASCADE REFRIGERATION

HIGH TEMPERATURE STAGE REFRIGERANT:

13 CUFT UNITS: R-404A 24 OZ. (680g) ±1/2 OZ (14g)

HIGH TEMPERATURE STAGE OIL: MOBILE EAL ARCTIC 22CC POLYOL ESTER OIL COMPRESSOR, 24 OZ.(710ml)

LOW TEMPERATURE STAGE REFRIGERANT:

13 CUFT UNITS: R-290 0.5 OZ. (14g) MAX, ; VAC TO 20"
R-508B 13 OZ (369g) ± 1/4 OZ.(7g) OR
20" TO 147 PSIG ± 3 PSIG

LOW TEMPERATURE STAGE OIL: ZEROL 150T WITH 2% ADDITIVE
COMPRESSOR: 24 OZ.(710ml)
OIL SEPARATOR: 15 OZ. (444ml)

* ALL PSIG MEASUREMENTS WHEN SYSTEM IS AT 23°C

1. COMMON TO: 703, 903, 992, 8603, 8692, 5703 & 5603 13 CU. FT. FREEZERS (120 V)

THIS DOCUMENT CONTAINS PROPRIETARY INFORMATION AND SUCH INFORMATION IS NOT TO BE DISCLOSED TO OTHERS FOR ANY PURPOSE NOR USED FOR MANUFACTURING PURPOSES WITHOUT WRITTEN PERMISSION FROM THERMO FORMA

REV	ECR NO.	DATE	BY	CAD	APPD	DESCRIPTION OF REVISION
1	N/A	01-07-03	MAH	PDK	MAH	CORRECTED COMPRESSOR STOCK NUMBERS
0	N/A	07-22-02	MAH	KDG	MAH	RELEASED FOR PRODUCTION

DATE 05-14-02	DWN MAH	CAD KDG	APPD MAH	SCALE NONE
CUSTOMER				
JOB TITLE -86°C 13 CU. FT. UPRIGHT FREEZERS (120 V)				
DWG TITLE REFRIGERATION SCHEMATIC				
LOCATION	JOB NUMBER	DRAWING NUMBER 8603-90-0-B		

Thermo Forma
BOX 649, MARIETTA, OHIO 45750

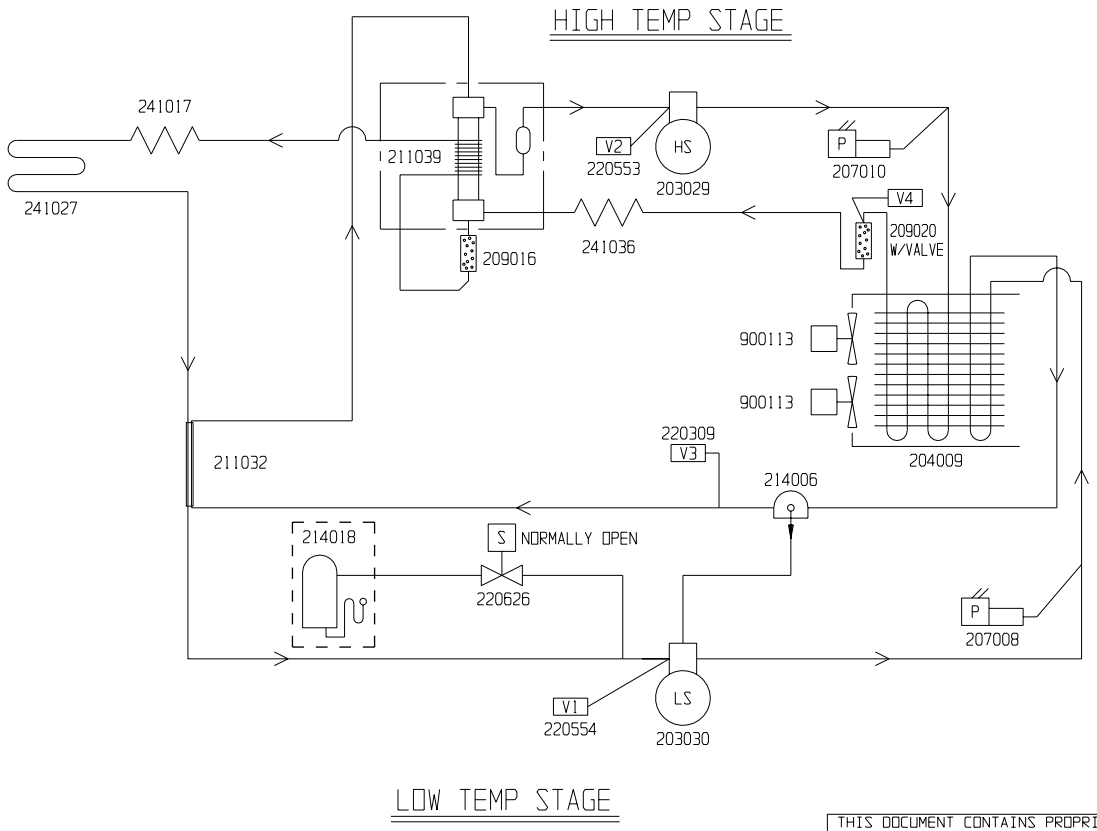

CASCADE REFRIGERATION

HIGH TEMPERATURE STAGE REFRIGERANT:

17 CUFT UNITS: R-404A 24 OZ. (680g) ±1/2 OZ (14g)

HIGH TEMPERATURE STAGE OIL: MOBILE EAL ARCTIC 22CC POLYOL ESTER OIL
COMPRESSOR, 24 OZ.(710ml)

LOW TEMPERATURE STAGE REFRIGERANT:

17 CUFT UNITS: R-290 0.8 OZ. (23g) MAX, ; VAC TO 2 PSIG
R-508B 15.0 OZ (425g) ± 1/4 OZ.(7g) OR
2 PSIG TO 123 PSIG ± 3 PSIG

LOW TEMPERATURE STAGE OIL: ZEROL 150T WITH 2% ADDITIVE
COMPRESSOR: 24 OZ.(710ml)
OIL SEPARATOR: 15 OZ. (444ml)

* ALL PSIG MEASUREMENTS WHEN SYSTEM IS AT 23°C

1. COMMON TO: 704, 904, 993, 8604, 8693, 5704 & 5604 17 CU. FT. FREEZERS (120 V)

THIS DOCUMENT CONTAINS PROPRIETARY INFORMATION AND SUCH INFORMATION IS NOT TO BE DISCLOSED TO OTHERS FOR ANY PURPOSE NOR USED FOR MANUFACTURING PURPOSES WITHOUT WRITTEN PERMISSION FROM THERMO FORMA

REV	ECR NO.	DATE	BY	CAD	APPD	DESCRIPTION OF REVISION
3	N/A	01-07-03	MAH	PDK	MAH	CORRECTED COMPRESSOR STOCK NUMBERS
2	FR-1615	11-05-02	MAH	KDG	MAH	CHG'D. L/S CHARGES & REMOVE TANK
1	FR-1615	10-02-02	DHG	KDG	MAH	REMOVE CAP TUBING TO EXP. TANK
0	N/A	07-22-02	MAH	KDG	MAH	RELEASED FOR PRODUCTION

DATE 05-14-02 | DWN MAH | CAD KDG | APPD MAH | SCALE NONE

CUSTOMER

JOB TITLE -86°C 17 CU. FT. UPRIGHT FREEZERS (120 V)

DWG TITLE REFRIGERATION SCHEMATIC

LOCATION | JOB NUMBER | DRAWING NUMBER 8604-90-0-B

Thermo Forma
BOX 649, MARIETTA, OHIO 45750

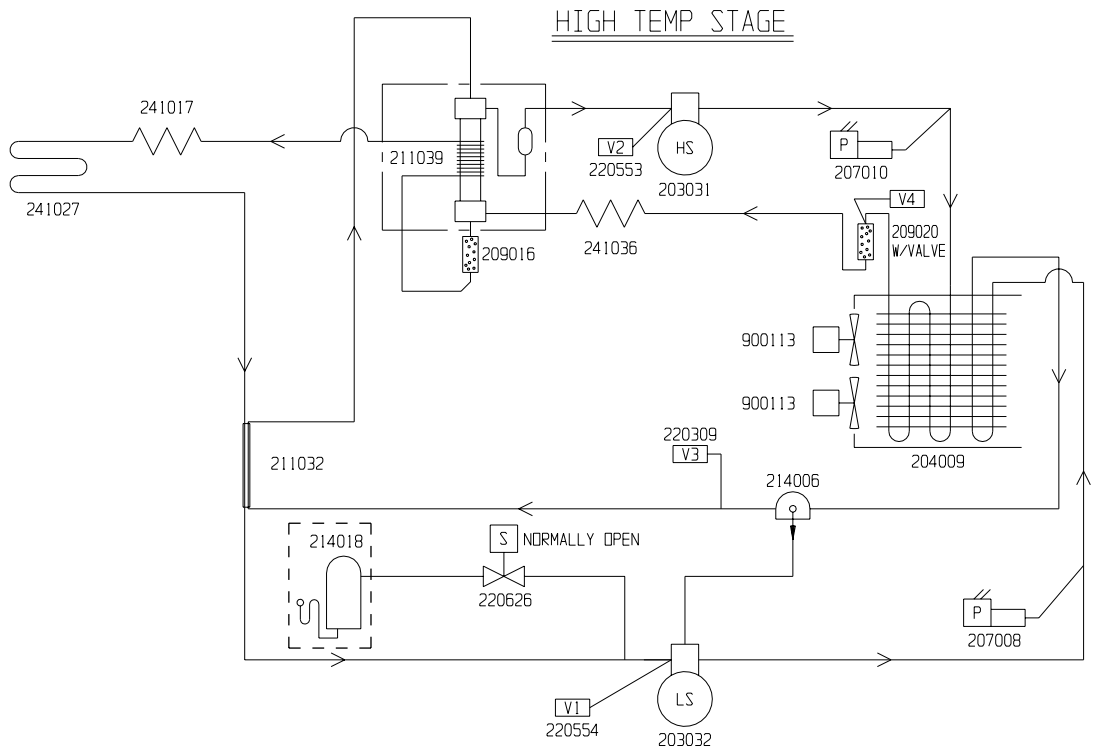

CASCADE REFRIGERATION

HIGH TEMPERATURE STAGE REFRIGERANT:

17 CUFT UNITS: R-404A 24 OZ. (680g) ±1/2 OZ (14g)

HIGH TEMPERATURE STAGE OIL: MOBILE EAL ARCTIC 22CC POLYOL ESTER OIL
COMPRESSOR, 24 OZ.(710ml)

LOW TEMPERATURE STAGE REFRIGERANT:

17 CUFT UNITS: R-290 0.9 OZ. (26g) MAX, ; VAC TO 3 PSIG
R-508B 15 OZ (425g) ± 1/4 OZ.(7g) OR
3 PSIG TO 134 PSIG ± 3 PSIG

LOW TEMPERATURE STAGE OIL: ZEROL 150T WITH 2% ADDITIVE
COMPRESSOR: 24 OZ.(710ml)
OIL SEPARATOR: 15 OZ. (444ml)

* ALL PSIG MEASUREMENTS WHEN SYSTEM IS AT 23°C

1. COMMON TO: 705, 905, 994, 8605, 8694, 5705 & 5605 17 CU. FT. FREEZERS (230 V)

THIS DOCUMENT CONTAINS PROPRIETARY INFORMATION AND SUCH INFORMATION IS NOT TO BE DISCLOSED TO OTHERS FOR ANY PURPOSE NOR USED FOR MANUFACTURING PURPOSES WITHOUT WRITTEN PERMISSION FROM THERMO FORMA

REV	ECR NO.	DATE	BY	CAD	APPD	DESCRIPTION OF REVISION
3	N/A	01-07-03	MAH	PDK	MAH	CORRECTED COMPRESSOR STOCK NUMBERS
2	FR-1664	12-17-02	MAH	KDG	MAH	CHANGED 900111 FANS TO 900113
1	FR-1615	10-02-02	DHG	KDG	LDN	REMOVE CAP TUBING TO EXP. TANK
0	N/A	07-22-02	MAH	KDG	MAH	RELEASED FOR PRODUCTION

DATE 05-14-02 | DWN MAH | CAD KDG | APPD MAH | SCALE NONE

CUSTOMER

JOB TITLE -86°C 17 CU. FT. UPRIGHT FREEZERS (230 V)

DWG TITLE REFRIGERATION SCHEMATIC

LOCATION | JOB NUMBER | DRAWING NUMBER 8605-90-0-B

Thermo Forma
BOX 649, MARIETTA, OHIO 45750

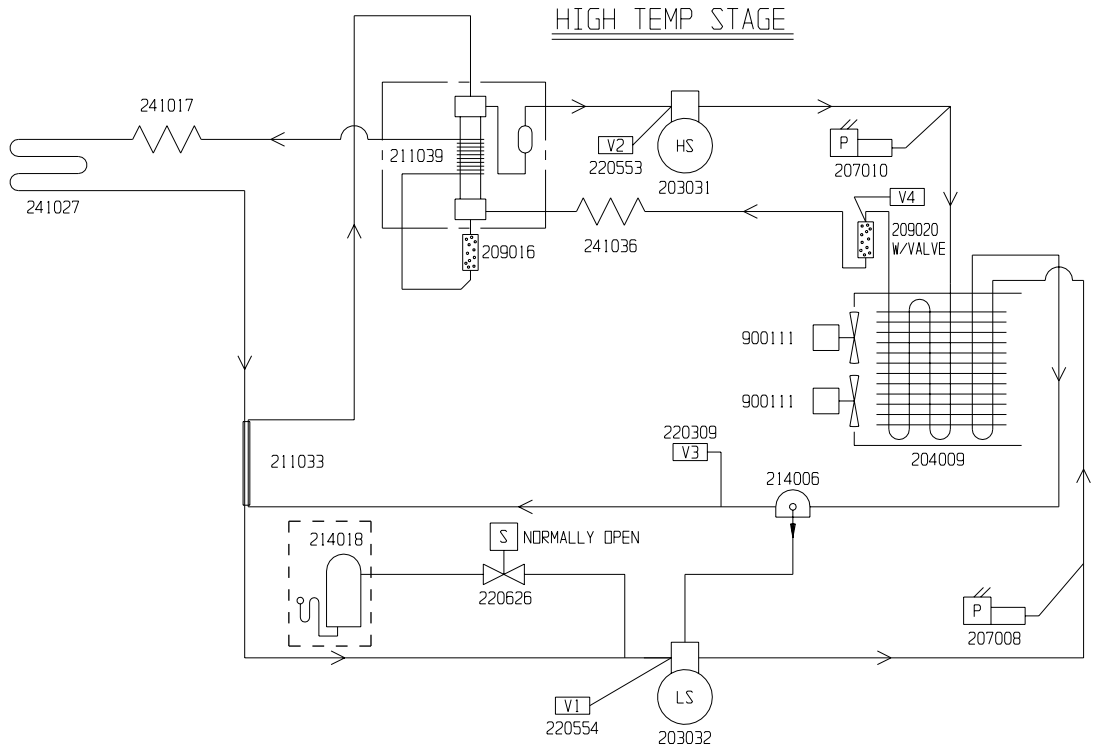

CASCADE REFRIGERATION

HIGH TEMP. STAGE REFRIGERANT: R-404A, 24 OZ. (680g) ±1/2 OZ. (14g)

HIGH TEMPERATURE STAGE OIL: MOBILE EAL ARCTIC 22CC POLYOL ESTER OIL COMPRESSOR, 24 OZ.(710ml)

LOW TEMP. STAGE REFRIGERANT: R-290 1.0 OZ. (28g) MAX. ; VAC TO 5 PSIG
R-508B 17.3 OZ. (490g) ± 1/4 OZ. (7g)
OR 5 PSIG TO 152 PSIG ± 3 PSIG

LOW TEMPERATURE STAGE OIL: ZEROL 150T WITH 2% ADDITIVE
COMPRESSOR: 24 OZ.(710ml)
OIL SEPARATOR: 15 OZ. (444ml)

* ALL PSIG MEASUREMENTS WHEN SYSTEM IS AT 23°C

1. COMMON TO: 706, 906, 995, 8606, 8695, 5706 & 5606 23 CU.FT. FREEZERS (230 V)

THIS DOCUMENT CONTAINS PROPRIETARY INFORMATION AND SUCH INFORMATION IS NOT TO BE DISCLOSED TO OTHERS FOR ANY PURPOSE NOR USED FOR MANUFACTURING PURPOSES WITHOUT WRITTEN PERMISSION FROM THERMO FORMA

REV	ECR NO.	DATE	BY	CAD	APPD	DESCRIPTION OF REVISION
3	N/A	01-07-03	MAH	PDK	MAH	CORRECTED COMPRESSOR STOCK NUMBERS
2	FR-1664	12-17-02	MAH	KDG	MAH	CHANGED 900111 FANS TO 900113
1	FR-1615	10-02-02	DHG	KDG	LDN	REMOVE CAP TUBING TO EXP. TANK
0	N/A	07-22-02	MAH	KDG	MAH	RELEASED FOR PRODUCTION

DATE 05-14-02 | DWN MAH | CAD KDG | APPD MAH | SCALE NONE

CUSTOMER

JOB TITLE -86°C 23 CU. FT. UPRIGHT FREEZERS (230 V)

DWG TITLE REFRIGERATION SCHEMATIC

LOCATION | JOB NUMBER | DRAWING NUMBER 8606-90-0-B

Thermo Forma
BOX 649, MARIETTA, OHIO 45750

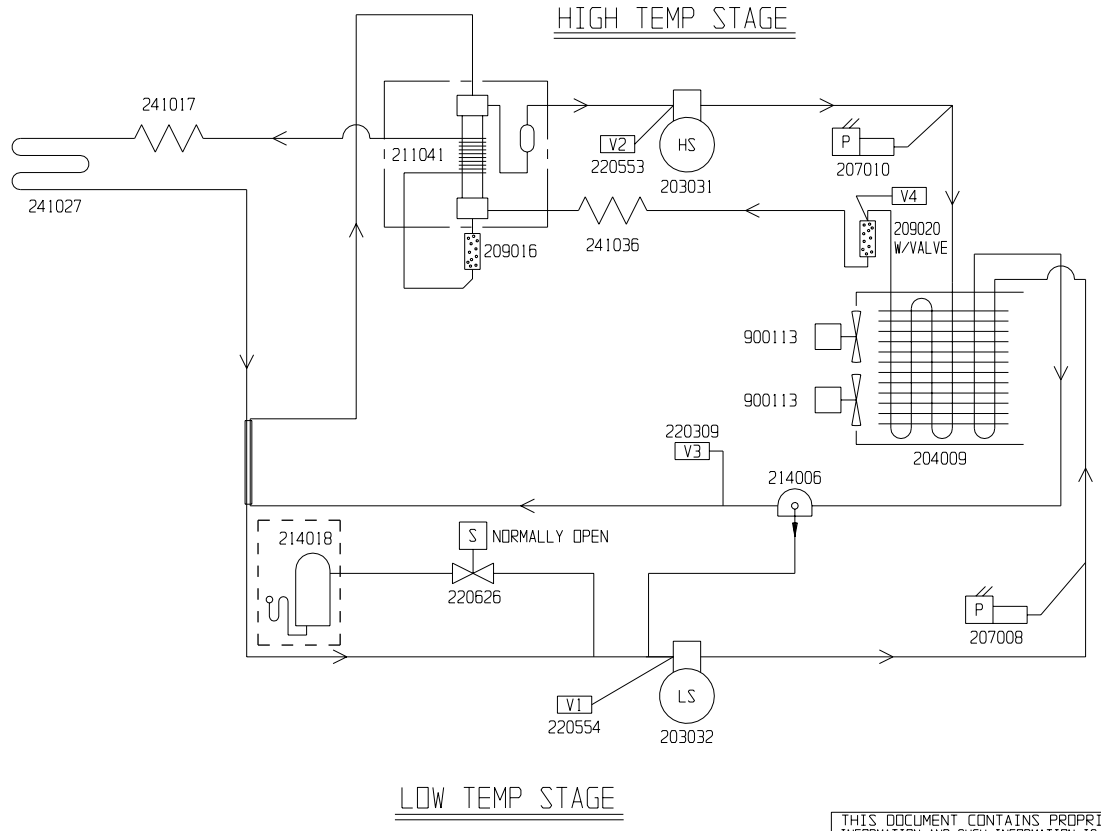

CASCADE REFRIGERATION

HIGH TEMPERATURE STAGE REFRIGERANT:

28 CUFT UNITS: R-404A 24 OZ. (680g) ±1/2 OZ (14g)

HIGH TEMPERATURE STAGE OIL: MOBILE EAL ARCTIC 22CC POLYOL ESTER OIL
COMPRESSOR, 24 OZ.(710ml)

LOW TEMPERATURE STAGE REFRIGERANT:

28 CUFT UNITS: R-290 1.0 OZ. (28g) MAX, ; VAC TO 4 PSIG

R-508B 17.7 OZ (502g) ± 1/4 OZ.(7g) OR
4 PSIG TO 144 PSIG ± 3 PSIG

LOW TEMPERATURE STAGE OIL: ZEROL 150T WITH 2% ADDITIVE
COMPRESSOR: 24 OZ.(710ml)
OIL SEPARATOR: 15 OZ. (444ml)

* ALL PSIG MEASUMENTS WHEN SYSTEM IS AT 23°C

1. COMMON TO: 8607, 907 28 CU. FT. FREEZERS (230 V)

THIS DOCUMENT CONTAINS PROPRIETARY INFORMATION AND SUCH INFORMATION IS NOT TO BE DISCLOSED TO OTHERS FOR ANY PURPOSE NOR USED FOR MANUFACTURING PURPOSES WITHOUT WRITTEN PERMISSION FROM THERMO FORMA

REV	ECR NO.	DATE	BY	CAD	APPD	DESCRIPTION OF REVISION
3	N/A	01-07-03	MAH	PDK	MAH	CORRECTED COMPRESSOR STOCK NUMBERS
2	FR-1664	12-17-02	MAH	KDG	MAH	CHANGED 900111 FANS TO 900113
1	FR-1615	10-02-02	DHG	KDG	LDN	REMOVE CAP TUBING TO EXP. TANK
0	N/A	07-22-02	MAH	KDG	MAH	RELEASED FOR PRODUCTION

DATE 05-14-02 | DWN MAH | CAD KDG | APPD MAH | SCALE NONE

CUSTOMER

JOB TITLE -86°C 28 CU. FT. UPRIGHT FREEZERS (230 V)

DWG TITLE REFRIGERATION SCHEMATIC

LOCATION | JOB NUMBER | DRAWING NUMBER 8607-90-0-B

ThermoForma
BOX 649, MARIETTA, OHIO 45750

DRAWING NUMBER: 195964-90-1-B

REV	ECN NO.	DATE	BY	CAD	APPD	DESCRIPTION OF REVISION
0	N/A	01-23-03	DHG	DHG	MAH	RELEASED FOR PRODUCTION

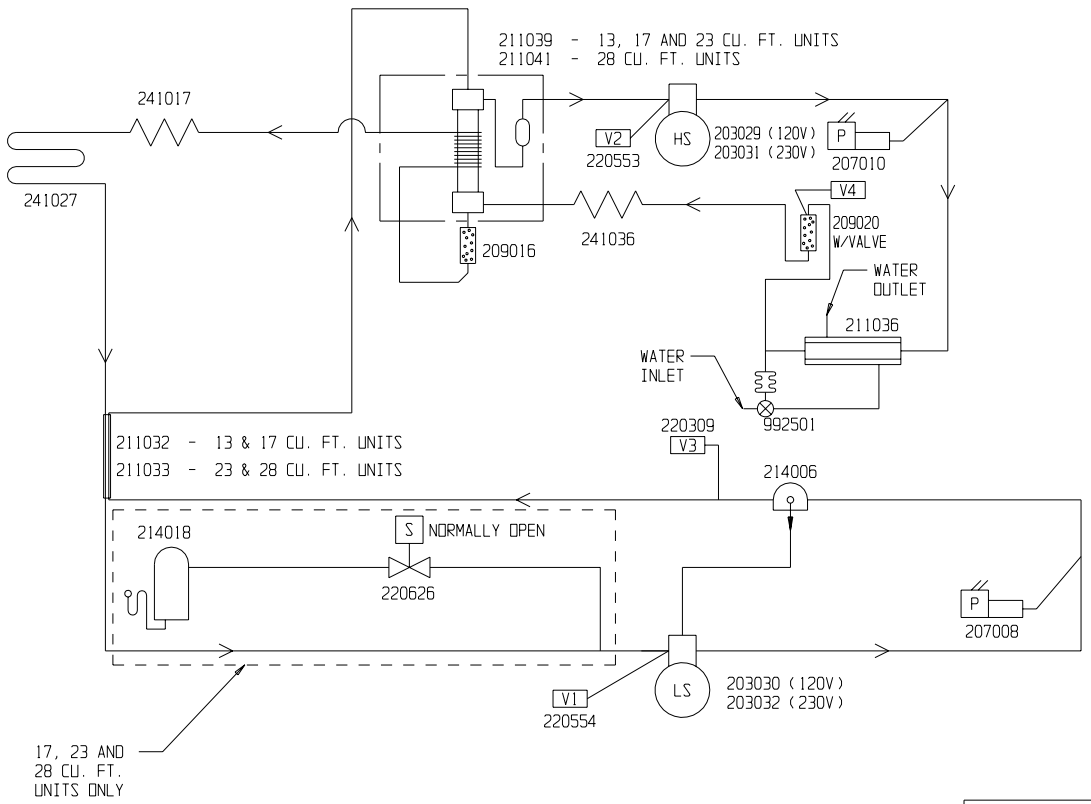

CASCADE REFRIGERATION

HIGH TEMPERATURE STAGE REFRIGERANT:

13 CUFT UNITS:	R-404A	24 OZ. (680gr) ±1/2 OZ (14gr)
17 CUFT UNITS:	R-404A	24 OZ. (680gr) ±1/2 OZ (14gr)
23 CUFT UNITS:	R-404A	24 OZ. (680gr) ±1/2 OZ (14gr)
28 CUFT UNITS:	R-404A	24 OZ. (680gr) ±1/2 OZ (14gr)

HIGH TEMPERATURE STAGE OIL: MOBILE EAL ARCTIC 22CC POLYOL ESTER
OIL COMPRESSOR, 24 OZ.(710ml)

LOW TEMPERATURE STAGE REFRIGERANT:

13 CUFT UNITS:	R-290	0.5 OZ. (14gr) MAX, ; VAC TO 20"
	R-508B	13 OZ (369gr) ± 1/4 OZ.(7gr) OR 20" TO 147 PSIG ± 3 PSIG
17 CUFT UNITS: (120 VOLTS)	R-290	0.8 OZ. (23gr) MAX, ; VAC TO 2 PSIG
	R-508B	13.4 OZ (380gr) ± 1/4 OZ.(7gr) OR 2 PSIG TO 123 PSIG ± 3 PSIG
17 CUFT UNITS: (230 VOLTS)	R-290	0.9 OZ. (26gr) MAX, ; VAC TO 3 PSIG
	R-508B	15 OZ (425gr) ± 1/4 OZ.(7gr) OR 3 PSIG TO 134 PSIG ± 3 PSIG
23 CUFT UNITS:	R-290	1.0 OZ. (28gr) MAX, ; VAC TO 5 PSIG
	R-508B	17.3 OZ (490gr) ± 1/4 OZ.(7gr) OR 5 PSIG TO 152 PSIG ± 3 PSIG
28 CUFT UNITS:	R-290	1.0 OZ. (28gr) MAX, ; VAC TO 4 PSIG
	R-508B	17.7 OZ (502gr) ± 1/4 OZ.(7gr) OR 4 PSIG TO 144 PSIG ± 3 PSIG

LOW TEMPERATURE STAGE OIL: ZEROL 150T WITH 2% ADDITIVE
COMPRESSOR: 24 OZ.(710ml)
OIL SEPARATOR: 15 OZ. (444ml)

***SET WATER REGULATING VALVE FOR 170 PSIG

* ALL PSIG MEASUREMENTS WHEN SYSTEM IS AT 23°C

COMMON TO: 195965

THIS DOCUMENT CONTAINS PROPRIETARY INFORMATION AND SUCH INFORMATION IS NOT TO BE DISCLOSED TO OTHERS FOR ANY PURPOSE NOR USED FOR MANUFACTURING PURPOSES WITHOUT WRITTEN PERMISSION FROM THERMO FORMA

Thermo Forma
BOX 649, MARIETTA, OHIO 45750

MODEL/PART NAME: -86°C 13, 17, 23 & 28 CU. FT. UPRIGHT H2O COOLED
DWG TITLE: FREEZER REFRIGERATION SCHEMATIC
DWN: DHG | CAD: DHG | APPD: MAH | DATE: 01-23-03 | SCALE: NONE
MATERIAL: N/A
PAINT COLOR: N/A
TOLERANCE UNLESS OTHERWISE SPECIFIED
ANGLES: DECIMAL: .XX=± .XXX=±
DRAWING NUMBER 195964-90-1
SIZE B

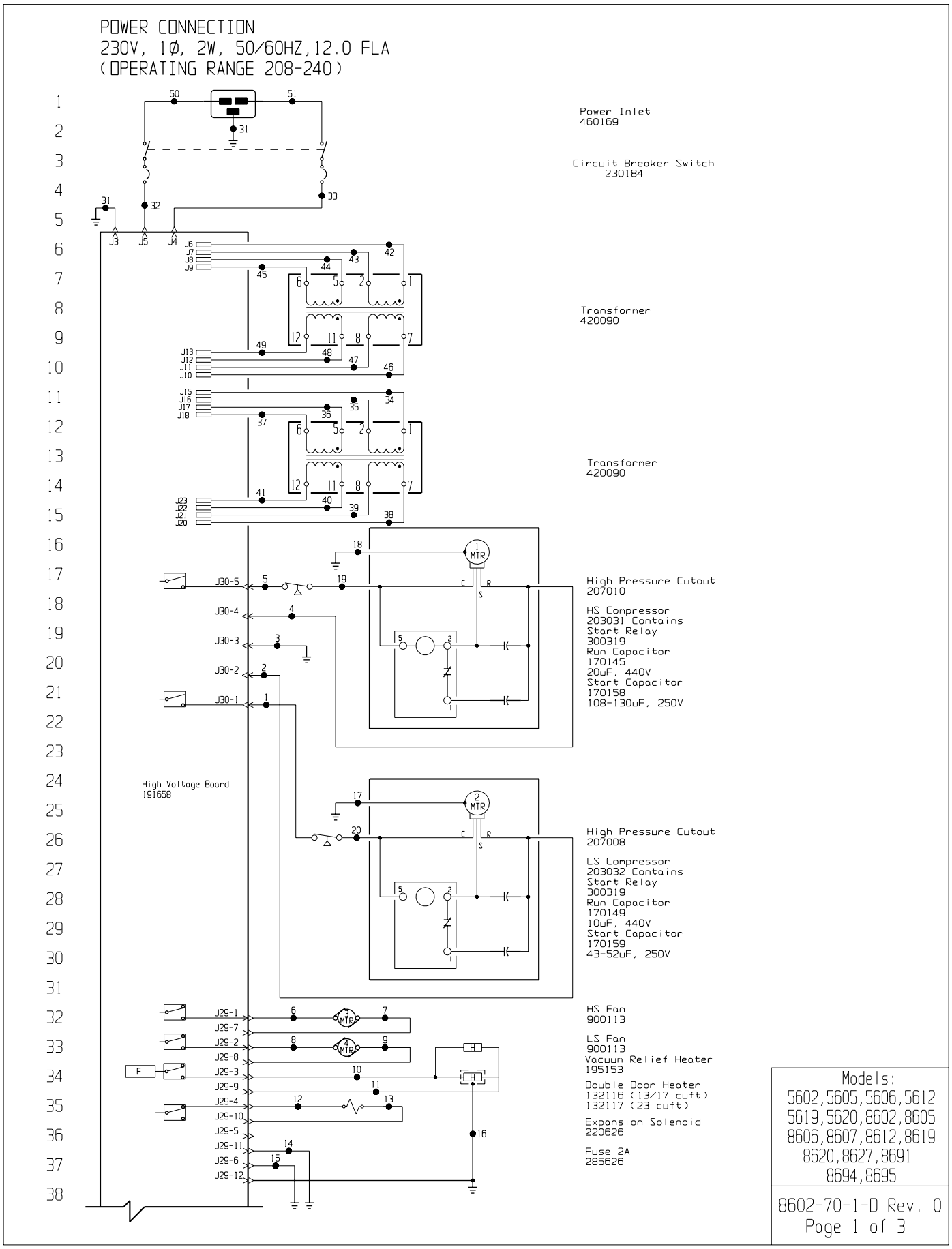
POWER CONNECTION
230V, 1Ø, 2W, 50/60HZ,12.0 FLA
(OPERATING RANGE 208-240)
Power Inlet
460169
Circuit Breaker Switch
230184
Transformer
420090
Transformer
420090
High Pressure Cutout
207010
HS Compressor
203031 Contains
Start Relay
300319
Run Capacitor
170145
20uF, 440V
Start Capacitor
170158
108-130uF, 250V
High Voltage Board
191658
High Pressure Cutout
207008
LS Compressor
203032 Contains
Start Relay
300319
Run Capacitor
170149
10uF, 440V
Start Capacitor
170159
43-52uF, 250V
HS Fan
900113
LS Fan
900113
Vacuum Relief Heater
195153
Double Door Heater
132116 (13/17 cuft)
132117 (23 cuft)
Expansion Solenoid
220626
Fuse 2A
285626
Models:
5602,5605,5606,5612
5619,5620,8602,8605
8606,8607,8612,8619
8620,8627,8691
8694,8695
8602-70-1-D Rev. 0
Page 1 of 3

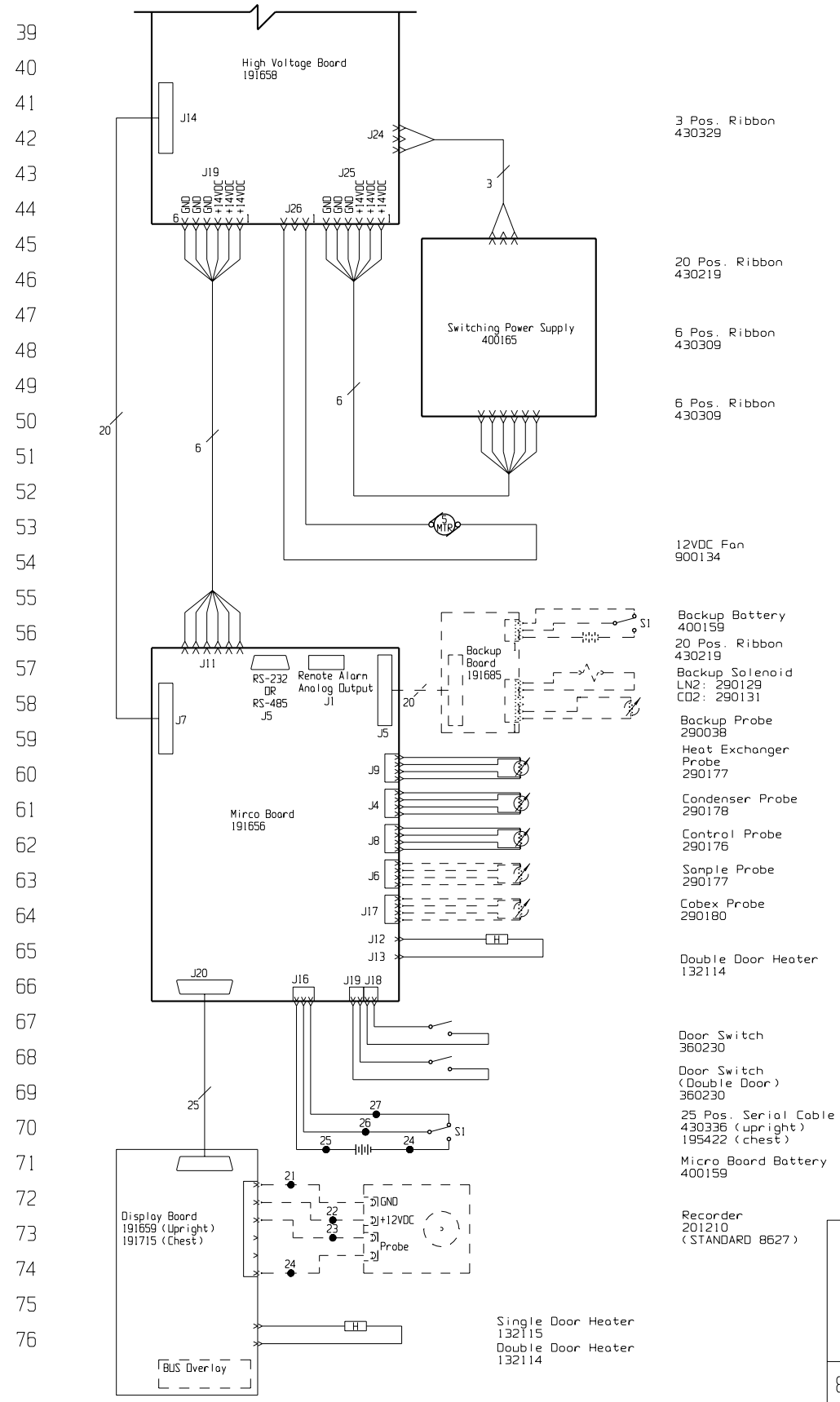

Models:
5602,5605,5606,5612
5619,5620,8602,8605
8606,8607,8612,8619
8620,8627,8691
8694,8695

8602-70-1-D Rev. 0
Page 2 of 3

WIRE #	COLOR	GAUGE
1	BLK	14
2	RED	14
3	GRN/YEL	14
4	RED	14
5	BLK	14
6	BLK	18
7	BLK	18
8	BLK	18
9	BLK	18
10	BLK	18
11	BLK	18
12	BLK	18
13	BLK	18
14	GRN/YEL	18
15	GRN/YEL	18
16	GRN/YEL	18
17	GRN/YEL	14
18	GRN/YEL	14
19	BLK	14
20	BLK	14
21	BLK	18
22	RED	18
23	BLK	18
24	RED	18

WIRE #	COLOR	GAUGE
25	RED	18
26	BLK	18
27	BLK	18
28	BLK	18
29		
30		
31	GRN/YEL	14
32	BLK	14
33	BLU	14
34	BLK	14
35	BLU	14
36	BLK	14
37	BLU	14
38	BLK	14
39	BLU	14
40	BLK	14
41	BLU	14
42	BLK	14
43	BLU	14
44	BLK	14
45	BLU	14
46	BLK	14
47	BLU	14
48	BLK	14
49	BLU	14
50	BLK	14
51	BLU	14

Uprights

SIZE	THERMO	THERMO	VWR
13	8602	8691	5602
17	8605	8694	5605
23	8606	8695	5606
28	8607		
13	8627		

Chests

SIZE	THERMO	VWR
12.7	8612	5612
17	8619	5619
20	8620	5620

RS-232 SPECIFICATION

BAUD = 1200
PARITY = N
BITS = 8
STOP BITS = 2

RS-232 PORT	
PIN# 2	TXD
PIN# 3	RXD
PIN# 5	GND

REMOTE CONTACTS/ANALOG OUTPUT	
PIN# 1	Analog Output +
PIN# 2	Analog Output -
PIN# 3	Not Connected
PIN# 4	Not Connected
PIN# 5	Normally Closed
PIN# 6	Connon.
PIN# 7	Normally Open

CONTACT RATING: 1A @ 30V
CONTACTS IN ALARM STATE

SW1 Settings for Analog Output

4-20mA Output

0-1V Output

0-5V Output

SW2 Settings for Communication Output

RS-485

RS-232

1. Schematic represents single & double door upright models and chest models. All heaters are on uprights only. Expansion solenoid on 17, 23 & 28 uprights only.
2. Door switches shown in open position.
3. Battery switch shown in the OFF position.
4. Circuit breaker switch shown in OFF position.
5. Options and acessories shown in dashed lines.

REV	ECN NO.	DATE	BY	CAD	APPD	DESCRIPTION OF REVISION
0	N/A	5-27-02	ADT	ADT	AKS	RELEASED FOR PRODUCTION

Models:
5602,5605,5606,5612
5619,5620,8602,8605
8606,8607,8612,8619
8620,8627,8691
8694,8695

ATTENTION
OBSERVE PRECAUTIONS
ELECTROSTATIC
SENSITIVE DEVICES

THIS DOCUMENT CONTAINS PROPRIETARY INFORMATION AND SUCH INFORMATION IS NOT TO BE DISCLOSED TO OTHERS FOR ANY PURPOSE NOR USED FOR MANUFACTURING PURPOSES WITHOUT WRITTEN PERMISSION FROM THERMO FORMA

MODEL/PART NAME: 8600 SERIES, 230V, ULT FREEZERS
DWG TITLE: UNIT SCHEMATIC
DWN: ADT | CAD: ADT | APPD: | DATE: 3-22-02 | SCALE: NONE
MATERIAL:
PAINT COLOR:
TOLERANCE UNLESS OTHERWISE SPECIFIED
ANGLES: DECIMAL: .XX=± .XXX=±
DRAWING NUMBER 8602-70-1
SIZE D

Thermo Forma
BOX 649, MARIETTA, OHIO 45750

8602-70-1-D Rev. 0
Page 3 of 3

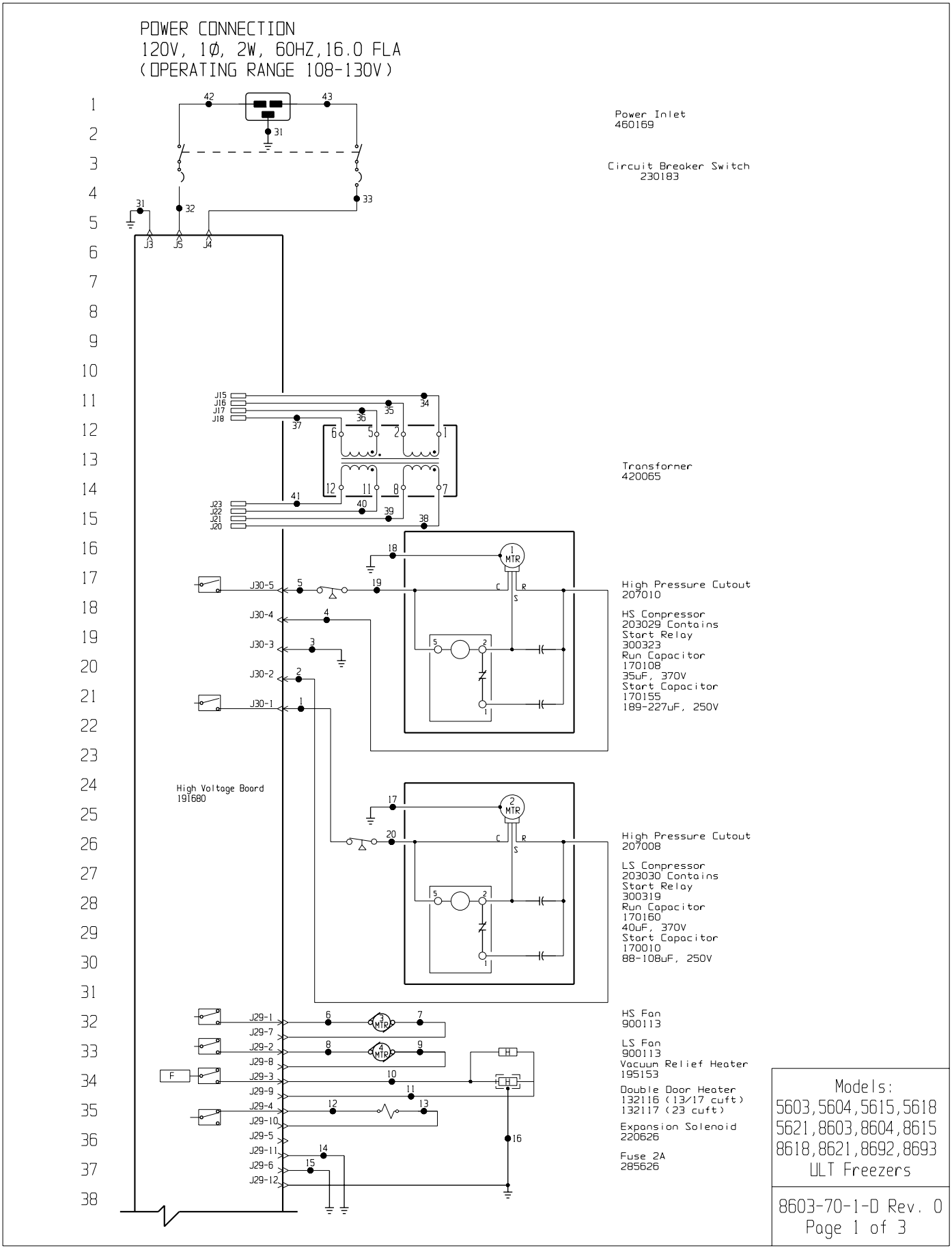
POWER CONNECTION
120V, 1Ø, 2W, 60HZ,16.0 FLA
(OPERATING RANGE 108-130V)
Power Inlet
460169
Circuit Breaker Switch
230183
Transformer
420065
High Pressure Cutout
207010
HS Compressor
203029 Contains
Start Relay
300323
Run Capacitor
170108
35uF, 370V
Start Capacitor
170155
189-227uF, 250V
High Voltage Board
191680
High Pressure Cutout
207008
LS Compressor
203030 Contains
Start Relay
300319
Run Capacitor
170160
40uF, 370V
Start Capacitor
170010
88-108uF, 250V
HS Fan
900113
LS Fan
900113
Vacuum Relief Heater
195153
Double Door Heater
132116 (13/17 cuft)
132117 (23 cuft)
Expansion Solenoid
220626
Fuse 2A
285626
Models:
5603,5604,5615,5618
5621,8603,8604,8615
8618,8621,8692,8693
ULT Freezers
8603-70-1-D Rev. 0
Page 1 of 3

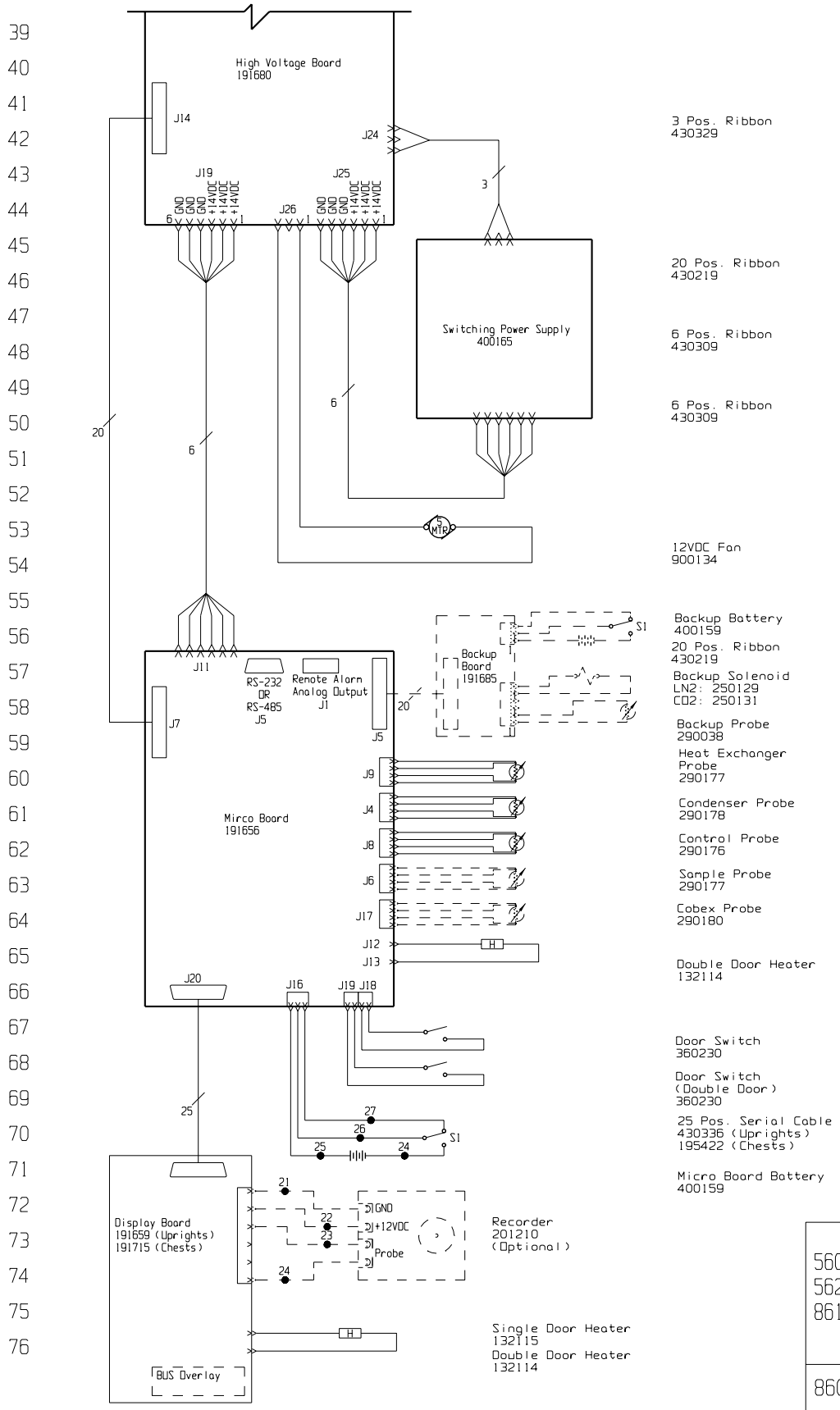

Models:
5603,5604,5615,5618
5621,8603,8604,8615
8618,8621,8692,8693
ULT Freezers

8603-70-1-D Rev. 0
Page 2 of 3

WIRE #	COLOR	GAUGE	WIRE #	COLOR	GAUGE
1	BLK	14	25	RED	18
2	RED	14	26	BLK	18
3	GRN/YEL	14	27	BLK	18
4	RED	14	28	BLK	18
5	BLK	14	29		
6	BLK	18	30		
7	BLK	18	31	GRN/YEL	14
8	BLK	18	32	BLK	14
9	BLK	18	33	BLU	14
10	BLK	18	34	BLK	14
11	BLK	18	35	BLU	14
12	BLK	18	36	BLK	14
13	BLK	18	37	BLU	14
14	GRN/YEL	18	38	BLK	14
15	GRN/YEL	18	39	BLU	14
16	GRN/YEL	18	40	BLK	14
17	GRN/YEL	14	41	BLU	14
18	GRN/YEL	14	42	BLK	14
19	BLK	14	43	BLU	14
20	BLK	14			
21	BLK	18			
22	RED	18			
23	BLK	18			
24	RED	18			

Uprights

SIZE	THERMO	THERMO	VWR
13	8603	8692	5603
17	8604	8693	5604

Chests

SIZE	THERMO	VWR
12.7	8615	5615
17	8618	5618
20	8621	5621

RS-232 SPECIFICATION

BAUD = 1200
PARITY = N
BITS = 8
STOP BITS = 2

RS-232 PORT
PIN# 2 TXD
PIN# 3 RXD
PIN# 5 GND

REMOTE CONTACTS/ANALOG OUTPUT
PIN# 1 Analog Output +
PIN# 2 Analog Output -
PIN# 3 Not Connected
PIN# 4 Not Connected
PIN# 5 Normally Closed
PIN# 6 Connon.
PIN# 7 Normally Open

CONTACT RATING: 1A @ 30V
CONTACTS IN ALARM STATE

SW1 Settings for Analog Output

4-20mA Output

0-1V Output

0-5V Output

SW2 Settings for Communication Output

RS-485

RS-232

1. Schematic represents single & double door upright models and chest models. All heater are for uprights only. Expansion solenoid on 17cuft uprights only.
2. Door switches shown in open position.
3. Battery switch shown in the OFF position.
4. Circuit breaker switch shown in OFF position.
5. Options and acessories shown in dashed lines.

REV	ECN NO.	DATE	BY	CAD	APPD	DESCRIPTION OF REVISION
0	N/A	5-27-02	ADT	ADT	AKS	RELEASED FOR PRODUCTION

THIS DOCUMENT CONTAINS PROPRIETARY INFORMATION AND SUCH INFORMATION IS NOT TO BE DISCLOSED TO OTHERS FOR ANY PURPOSE NOR USED FOR MANUFACTURING PURPOSES WITHOUT WRITTEN PERMISSION FROM THERMO FORMA

MODEL/PART NAME: 8600 SERIES, 120V, ULT FREEZERS
DWG TITLE: UNIT SCHEMATIC
DWN: ADT | CAD: ADT | APPD: | DATE: 3-22-02 | SCALE: NONE
MATERIAL:
PAINT COLOR:
TOLERANCE UNLESS OTHERWISE SPECIFIED
ANGLES: DECIMAL: .XX=± .XXX=±
DRAWING NUMBER 8603-70-1
SIZE D

Thermo Forma
BOX 649, MARIETTA, OHIO 45750

ATTENTION
OBSERVE PRECAUTIONS
ELECTROSTATIC
SENSITIVE DEVICES

Models:
5603,5604,5615,5618
5621,8603,8604,8615
8618,8621,8692,8693
ULT Freezers

8603-70-1-D Rev. 0
Page 3 of 3

Appendix A

Handling Liquid Nitrogen

Contact of liquid nitrogen or cold gas with the skin or eyes may cause serious freezing (frostbite) injury.

Handle liquid nitrogen carefully.

The extremely low temperature can freeze human flesh very rapidly. When spilled on a surface the liquid tends to cover it completely and intimately, cooling a large area. The gas issuing from the liquid is also extremely cold. Delicate tissue, such as that of the eyes, can be damaged by an exposure to the cold gas which would be too brief to affect the skin of the hands or face.

Never allow any unprotected part of your body to touch objects cooled by liquid nitrogen.

Such objects may stick fast to the skin and tear the flesh when you attempt to free yourself. Use tongs to withdraw objects immersed in the liquid, and handle the object carefully.

Wear protective clothing.

Protect your eyes with a face shield or safety goggles (safety glasses without side shields do not give adequate protection). Always wear gloves when handling anything that is, or may have been, in immediate contact with liquid nitrogen. Insulated gloves are recommended, but heavy leather gloves may also be used. The gloves should fit loosely, so that they can be thrown off quickly if liquid should splash into them. When handling liquid in open containers, it is advisable to wear high-top shoes. Trousers (which should be cuffless if possible) should be worn outside the shoes.

Introduction

The safe handling and use of liquid nitrogen in cryogenic refrigerators and dewar flasks is largely a matter of knowing the potential hazards and using common-sense procedures based on that knowledge. There are two important properties of liquid nitrogen that present potential hazards:

1. It is extremely cold. At atmospheric pressure, liquid nitrogen boils at -320°F (-196°C).
2. Very small amounts of liquid vaporize into large amounts of gas. One liter of liquid nitrogen becomes 24.6cu. ft. (0.7ml) of gas.

The safety precautions in this booklet must be followed to avoid potential injury or damage which could result from these two characteristics. Do not attempt to handle liquid nitrogen until you read and fully understand the potential hazards, their consequences, and the related safety precautions. Keep this booklet handy for ready reference and review.

Note: Because argon is an inert gas whose physical properties are very similar to those of nitrogen, the precautions and safe practices for the handling and use of liquid argon are the same as those for liquid nitrogen.

Use only containers designed for low temperature liquids.

Cryogenic containers are specifically designed and made of materials that can withstand the rapid changes and extreme temperature differences encountered in working with liquid nitrogen. Even these special containers should be filled SLOWLY to minimize the internal stresses that occur when any material is cooled. Excessive internal stresses can damage the container.

Do not cover or plug the entrance opening of any liquid nitrogen refrigerator or dewar. Do not use any stopper or other device that would interfere with venting of gas.

These cryogenic liquid containers are generally designed to operate with little or no internal pressure. Inadequate venting can result in excessive gas pressure which could damage or burst the container. Use only the loose-fitting necktube core supplied or one of the approved accessories for closing the necktube. Check the unit periodically to be sure that venting is not restricted by accumulated ice or frost.

Use proper transfer equipment.

Use a phase separator or special filling funnel to prevent splashing and spilling when transferring liquid nitrogen into or from a dewar or refrigerator. The top of the funnel should be partly covered to reduce splashing. Use only small, easily-handled dewars for pouring liquid. For the larger, heavier containers, use a cryogenic liquid withdrawal device to transfer liquid from one container to another. Be sure to follow instructions supplied with the withdrawal device. When liquid cylinders or other large storage containers are used for filling, follow the instructions supplied with those units and their accessories.

Do not overfill containers.

Filling above the bottom of the necktube (or specified maximum level) can result in overflow and spillage of liquid when the necktube core or cover is placed in the opening.

Never use hollow rods or tubes as dipsticks.

When a warm tube is inserted into liquid nitrogen, liquid will spout from the top of the tube due to gasification and rapid expansion of liquid inside the tube.

Nitrogen Gas Can Cause Suffocation Without Warning!

Store and use liquid nitrogen only in a well-ventilated place.

As the liquid evaporates, the resulting gas tends to displace the normal air from the area. In closed areas, excessive amounts of nitrogen gas reduce the concentration of oxygen and can result in asphyxiation. Because nitrogen gas is colorless, odorless and tasteless, it cannot be detected by the human senses and will be breathed as if it were air. Breathing an atmosphere that contains less than 18% oxygen can cause dizziness and quickly result in unconsciousness and death.

Note: The cloudy vapor that appears when liquid nitrogen is exposed to the air is condensed moisture; not the gas itself. The issuing gas is invisible.

Never dispose of liquid nitrogen in confined areas or places where others may enter.

Disposal of liquid nitrogen should be done outdoors in a safe place. Pour the liquid slowly on gravel or bare earth where it can evaporate without causing damage. Do not pour the liquid on pavement.

Appendix B

Handling Liquid Co_2

High concentrations of CO_2 gas can cause asphyxiation! OSHA Standards specify that employee exposure to carbon dioxide in any eight-hour shift of a 40-hour work week shall not exceed the eight-hour time weighted average of 5000 PPM (0.5% CO_2). The short term exposure limit for 15 minutes or less is 30,000 PPM (3% CO_2). Carbon dioxide monitors are recommended for confined areas where concentrations of carbon dioxide gas can accumulate.

Store and use liquid CO_2 only in a well-ventilated place.

As the liquid evaporates, the resulting gas tends to displace the normal air from the area. In closed areas, excessive amounts of CO_2 gas reduce the concentration of oxygen and can result in asphyxiation. Because CO_2 gas is colorless, odorless and tasteless, it cannot be detected by the human senses and will be breathed as if it were air. Breathing an atmosphere that contains less than 18% oxygen can cause dizziness and quickly result in unconsciousness and death.

Note: The cloudy vapor that appears when liquid CO_2 is exposed to the air is condensed moisture; not the gas itself. The issuing gas is invisible.

Never dispose of liquid CO_2 in confined areas or places where others may enter.

Disposal of liquid CO_2 should be done outdoors in a safe place. Pour the liquid slowly on gravel or bare earth where it can evaporate without causing damage. Do not pour the liquid on pavement.

First Aid

If a person seems to become dizzy or loses consciousness while working with liquid nitrogen or carbon dioxide, move to a well-ventilated area immediately. If breathing has stopped, apply artificial respiration. If breathing is difficult, give oxygen. Call a physician. Keep warm and at rest.

If exposed to liquid or cold gas, restore tissue to normal body temperature (98.6° F) as rapidly as possible, followed by protection of the injured tissue from further damage and infection. Remove or loosen clothing that may constrict blood circulation to the frozen area. Call a physician. Rapid warming of the affected part is best achieved by using water at 108° F. Under no circumstance should the water be over 112° F, nor should the frozen part be rubbed either before or after rewarming. The patient should neither smoke nor drink alcohol.

Thermo Forma
Millcreek Road, P.O. Box 649
Marietta, Ohio 45750
U.S.A.

Telephone (740) 373-4763
Telefax (740) 373-4189