Thermo Forma

Models:
1284, 1285, 1286, 1287, 1288, 1290 and 1291

Biological Safety Cabinets
Class II, Type A/B3

Operating and Maintenance Manual

Manual No: 7001284 Rev. 4

Read This Instruction Manual.

Failure to read, understand and follow the instructions in this manual may result in damage to the unit, injury to operating personnel, and poor equipment performance.

CAUTION! All internal adjustments and maintenance must be performed by qualified service personnel.

Refer to the serial tag on the back of this manual.

The material in this manual is for information purposes only. The contents and the product it describes are subject to change without notice. Thermo Forma makes no representations or warranties with respect to this manual. In no event shall Thermo Forma be held liable for any damages, direct or incidental, arising out of or related to the use of this manual.

Lamps, thermometers and thermoregulators contain mercury. Do not put in trash! Recycle or dispose as hazardous waste.

CAUTION

Contains Parts and Assemblies Susceptible to Damage by Electrostatic Discharge (esd)

MANUAL NUMBER 7001284

REV	ECR/ECN	DATE	DESCRIPTION	By
4	--	8/2/99	Updated certification listing	ccp
3	17913/HD-1237	12/7/98	Added info on leveling feet to prevent vibration - B. Morrison	ccp

Alerts the user to important operating and/or maintenance instructions. May be used alone or with other safety symbols. Read the accompanying text carefully.

Potential electrical hazards. Only qualified persons should perform the instructions and procedures associated with this symbol.

Hazard. Do not touch. Instructions associated with this symbol should only be carried out when using special handing equipment or when wearing special, protective clothing.

Potential biological hazards. Proper protective equipment and procedures must be used when following instructions associated with this symbol. Reference O.S.H.A. Regulation 1910-1030.

Potentially hazardous energy. Equipment being maintained or serviced must be turned off and locked off to prevent possible injury. Reference O.S.H.A. Regulation 1910-147.

Hot surface(s) present which may cause burns to unprotected skin or to materials which may be damaged by elevated temperatures

Warning. Skin damage and/or eye injury can result from the light produced by ultra violet light sources installed in this equipment. Never work in this unit with the ultra violet light operating.

* ***Always use the proper protective equipment (clothing, gloves, goggles etc.).***
* ***Always dissipate extreme cold or heat, or wear protective clothing.***
* ***Always follow good hygiene practices.***
* ***Each individual is responsible for his/her own safety.***

Do You Need Information or Assistance on Thermo Forma Products?

If you do, please contact us 8:00 a.m. to 6:00 p.m. (Eastern Time) at:

1-740-373-4763	Direct
1-888-213-1790	Toll Free, U.S. and Canada
1-740-373-4189	FAX
http://www.thermoforma.com	Internet Worldwide Web Home Page
service@thermoforma.com	Service E-Mail Address

Our **Sales Support** staff can provide information on pricing and give you quotations. We can take your order and provide delivery information on major equipment items or make arrangements to have your local sales representative contact you. Our products are listed on the Internet and we can be contacted through our Internet home page.

Our **Service Support** staff can supply technical information about proper setup, operation or troubleshooting of your equipment. We can fill your needs for spare or replacement parts or provide you with on-site service. We can also provide you with a quotation on our Extended Warranty for your Thermo Forma products.

Whatever Thermo Forma products you need or use, we will be happy to discuss your applications. If you are experiencing technical problems, working together, we will help you locate the problem and, chances are, correct it yourself...over the telephone without a service call.

When more extensive service is necessary, we will assist you with direct factory trained technicians or a qualified service organization for on-the-spot repair. If your service need is covered by the warranty, we will arrange for the unit to be repaired at our expense and to your satisfaction.

Regardless of your needs, our professional telephone technicians are available to assist you Monday through Friday from 8:00 a.m. to 6:00 p.m. Eastern Time. Please contact us by telephone or fax. If you wish to write, our mailing address is:

Thermo Forma
Millcreek Road, PO Box 649
Marietta, OH 45750

International customers, please contact your local Thermo Forma distributor.

Table of Contents

Section 1 - Receiving . . . . . .2 - 1
1.1 Unpacking List . . . . . .2 - 1

Section 2 - Introduction . . . . . .2 - 1
2.1 Description . . . . . .2 - 1
2.2 Theory of Operation . . . . . .2 - 1

Section 3 - Installation . . . . . .3 - 1
3.1 Location . . . . . .3 - 1
3.2 Power Connection . . . . . .3 - 1
3.3 Plumbing Connection . . . . . .3 - 1
3.4 Exhaust Requirements . . . . . .3 - 1
a. Direct Room Exhaust . . . . . .3 - 1
b. External Exhaust System . . . . . .3 - 1
3.5 Remote Alarm Contacts . . . . . .3 - 4

Section 4 – Operation . . . . . .4 - 1
4.1 Control and Indicating Devices . . . . . .4 - 1

Section 5 - General Cautions . . . . . .6 - 1
5.1 Caution Notes . . . . . .6 - 1

Section 6 - Cabinet Start-Up . . . . . .6 - 1
6.1 General Recommendations . . . . . .6 - 1
6.2 Use of Auxiliary Equipment in the Cabinet . . . . . .6 - 1
6.3 Cabinet Checklist . . . . . .6 - 1
6.4 Start-Up Procedure . . . . . .6 - 1

Section 7 - Troubleshooting . . . . . .8 - 1
7.1 Troubleshooting Guide . . . . . .8 - 1

Section 8 - Routine Maintenance . . . . . .8 - 1
8.1 Checking the Static Pressure Gauge “Zero” . . . . . .8 - 1
8.2 Zeroing the Static Pressure Gauge . . . . . .8 - 1
8.3 Adjusting the Damper . . . . . .8 - 1
8.4 Biological Safety Cabinet Test Grids . . . . . .8 - 2

Section 9 - Service . . . . . .9 - 1
9.1 Replacing the Blower Motor (1284 Series) . . . . . .9 - 1
9.2 Replacing the Blower Motor (1286 Series) . . . . . .9 - 2
9.3 Replacing the Filters, All Models . . . . . .9 - 2

Section 10 – Specifications . . . . . .10 -1

Section 11 – Accessories . . . . . .11 -1

Section 12 - Parts List . . . . . .12 -1

Section 13 - Electrical Schematics . . . . . .13 - 1

Section 14 - Warranty . . . . . .14 - 1

Certifier Listing

Section 1 - Receiving

1.1 Unpacking List

Included with the installation/operation manual are four identification index buttons. These buttons may be used to identify the type of service supplied to the service valves. Also included in a separate bag attached to the drain handle, is a small Allen wrench used for calibrating the Static Pressure Gauge. This Allen wrench should be kept with the manual at all times.

Section 2 - Introduction

2.1 Description

The Models 1284, 1285, 1286, 1287, 1288, 1290 and 1291 are Class II, Type A/B3 cabinets. The “Type A/B3” designation indicates two alternative uses of the cabinet. When vented directly into the laboratory room, the unit serves as a “Type A” unit. When vented to the outside atmosphere, through an in-house exhaust system, it serves as a “Type B3” unit. Either usage of the cabinet offers both personnel and product protection.

The cabinet can be used in low-to-moderate risk environments and is designed to NSF, International Standard #49. Class 1, 2, and 3 (low-to-moderate risk) agents are described in the “Biosafety In Microbiological And Biomedical Laboratories”; CDC NIH Publication No. (NIH) 88-8395, 3rd Edition, May 1993.

The cabinet’s window permits the user to place auxiliary equipment and research implements in the work area. The work opening must be held to 10 inches during all work procedures. If the window is raised higher than the designated 10 inches, the air barrier at the front of the cabinet will be weakened and containment will be seriously impaired.

2.2 Theory of Operation

Clean, filtered air descends through the work zone with approximately 40% being discharged through the exhaust HEPA filter with the remaining air recirculating through the supply HEPA filter into the work area. Exhausted air is replaced by room air entering the system through the front access opening.

Room air entering the work zone, through the front access opening, completes the air barrier at the unit face and is responsible for the containment properties of the unit. All work must be performed beyond the intake grille, on the solid work tray.

Section 3 - Installation

3.1 Location

Locate the cabinet on a firm, level surface in an area of minimum temperature changes. The cabinet should be placed away from disruptive air currents caused by excessive personnel traffic, air-conditioning or heating ductwork, or laboratory windows and doors. Proper cabinet location is important, as drafts disrupt critical airflow characteristics and allow room contaminants to enter or escape the cabinet work area.

Where space permits, fourteen inches should be allowed on each side of the cabinet for maintenance. A twelve-inch height should be available from the top of the cabinet to the ceiling.

Place a bubble-type level on the work surface. Adjust the leveling feet until the cabinet is level and the most comfortable working height is achieved. Ensure that all four leveling feet are fully flush against the floor to prevent vibration.

3.2 Power Connection

The electrical wall outlet leading to the cabinet should be accessible for electrical testing. This cabinet is equipped with one power cord supplying power to the blower, lights and receptacles. The cord should be plugged into a dedicated circuit. Refer to Section 9 or to the serial plate on the front of the unit for electrical specifications.

3.3 Plumbing Connection

Two service valves are standard with each cabinet and located on the right and left side of the work station. All service valves are piped within the cabinet. External connection is a 3/8” FPT coupling. Identification index buttons are supplied.

The cabinet will accommodate four service valves. An additional two service valves may be purchased from Thermo Forma.

Explosive/flammable substances should never be used in the cabinet, unless approved and monitored by a biological safety officer or other qualified individual. However, if flammable gas is used, emergency shut-off valves must be located in an accessible area external to the cabinet.

3.4 Exhaust Requirements

Filtered air from the cabinet may be exhausted directly into the room or vented to the outside through an external exhaust system. Consult a biological safety officer or other qualified individual for cabinet-type exhaust requirements.

a. Direct Room Exhaust

1. Locate the exhaust filter guard on the top of the cabinet.
2. Remove and save the ten acorn-type nuts and washers that secure the exhaust the exhaust filter guard.
3. Remove the cardboard cover plate from the top of the cabinet.
4. Replace the exhaust filter guard with the slope toward the front and the back of the unit. Secure it with the ten acorn-type nuts and washers removed earlier.

b. External Exhaust System (For Class II Type B3 Only)

The intermediate connection of the cabinet to any external exhaust system (in-house) can be done by using an exhaust transition, which is available from Thermo Forma. The exhaust transistion requires a minimum of 17-1/8” headroom from the top of the cabinet.

The exhaust system should have safeguards against exhaust failure. It is required that a biological safety officer, industrial hygienist or other qualified individual review the agents and chemicals used inside the cabinet to determine if additional filtration treatment is necessary before venting to the atmosphere.

The exhaust system must be capable of handling the volume of air passing through the cabinet. Models 1284, 1285 and 1288 have an air volume of 356-390 CFM. Models 1286, 1287, 1290 and 1291 have an air volume of 530-581 CFM.

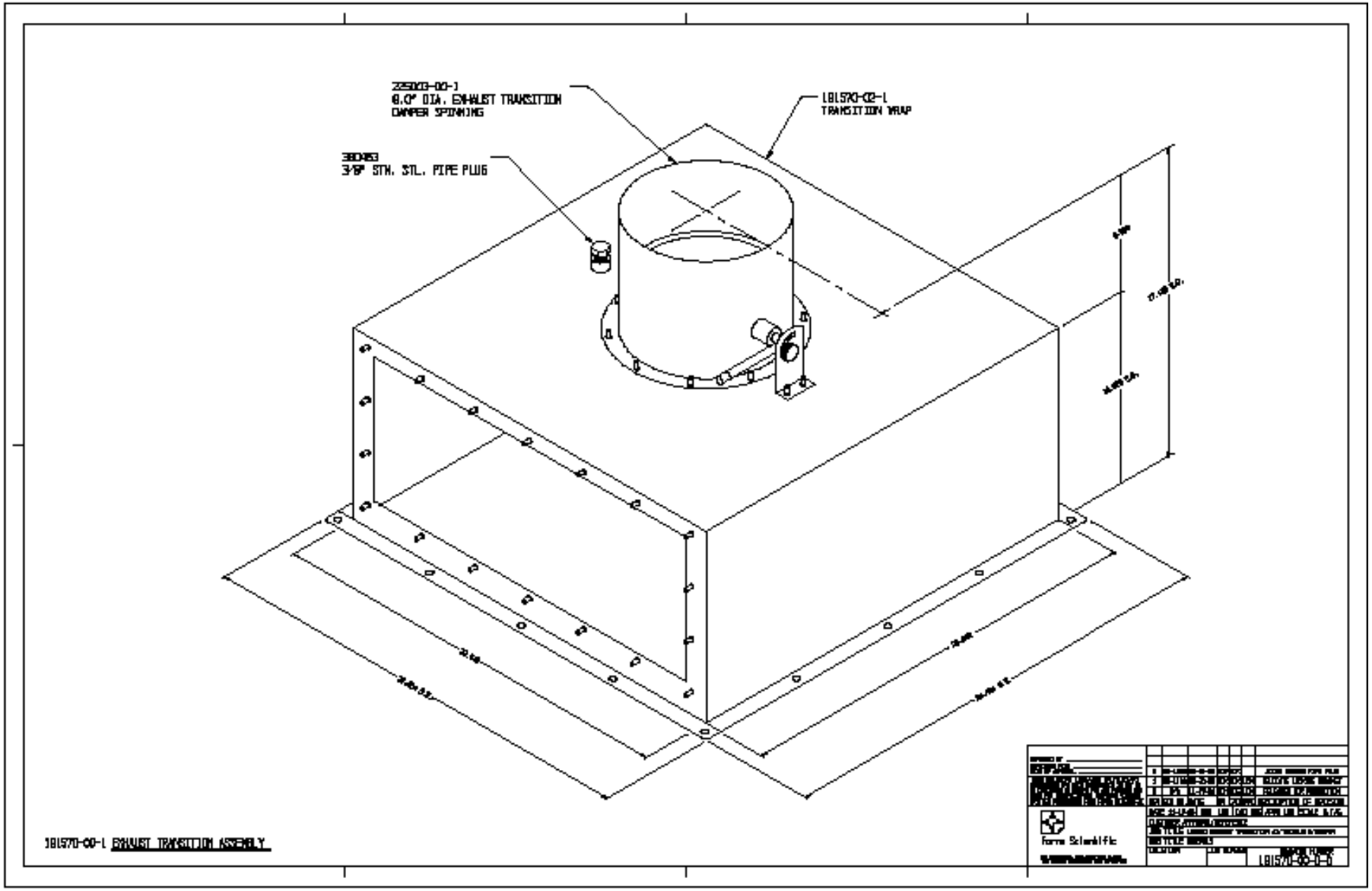
225003-00-1
8.0" DIA. EXHAUST TRANSITION
DAMPER SPINNING
181570-02-L
TRANSITION WRAP
380453
3/8" STN. STL. PIPE PLUG
181570-00-L EXHAUST TRANSITION ASSEMBLY
Forma Scientific

3.5 Remote Alarm Contacts (Models 1288, 1290 and 1291)

This area contains hazardous voltages. The procedure should be done by qualified personnel only.

For facilities requiring remote alarms connected to biological safety cabinets, a relay with normally open and normally closed contacts is installed in the blower electrical circuit. The alarm contacts are pre-wired as shown in Figure 3-3 and on the Model 1288, 1290 and 1291 electrical schematics at the end of this manual. See the diagram on the following page for the remote alarm contact relay location.

The relay wires are identified N.O., N.C., and COM and are fitted with quick-connect terminals with the connector mates installed. The connectors need only to be pulled apart, the alarm wiring crimped onto the connectors and the two halves pushed back together. The alarm wiring within the enclosure must be 18 to 22 gauge jacketed cable, rated for a minimum of 300V. The wires exit the control section of the cabinet through a hole identified by the large black arrow in the illustration below.

Figure 3-3

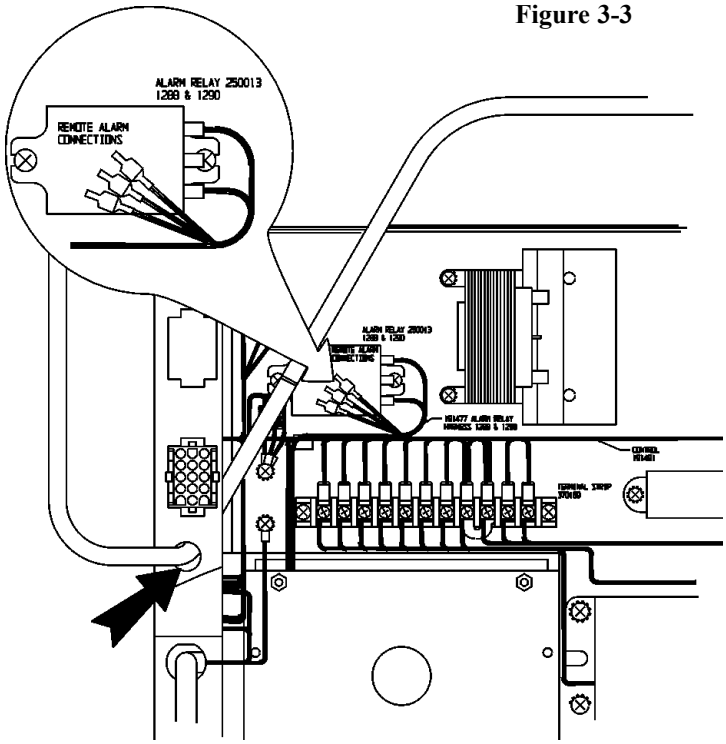

Refer also to the wiring diagram on the following page to identifiy the location of the remote alarm contact relay.

Refer to remote alarm contacts section of the operating manual

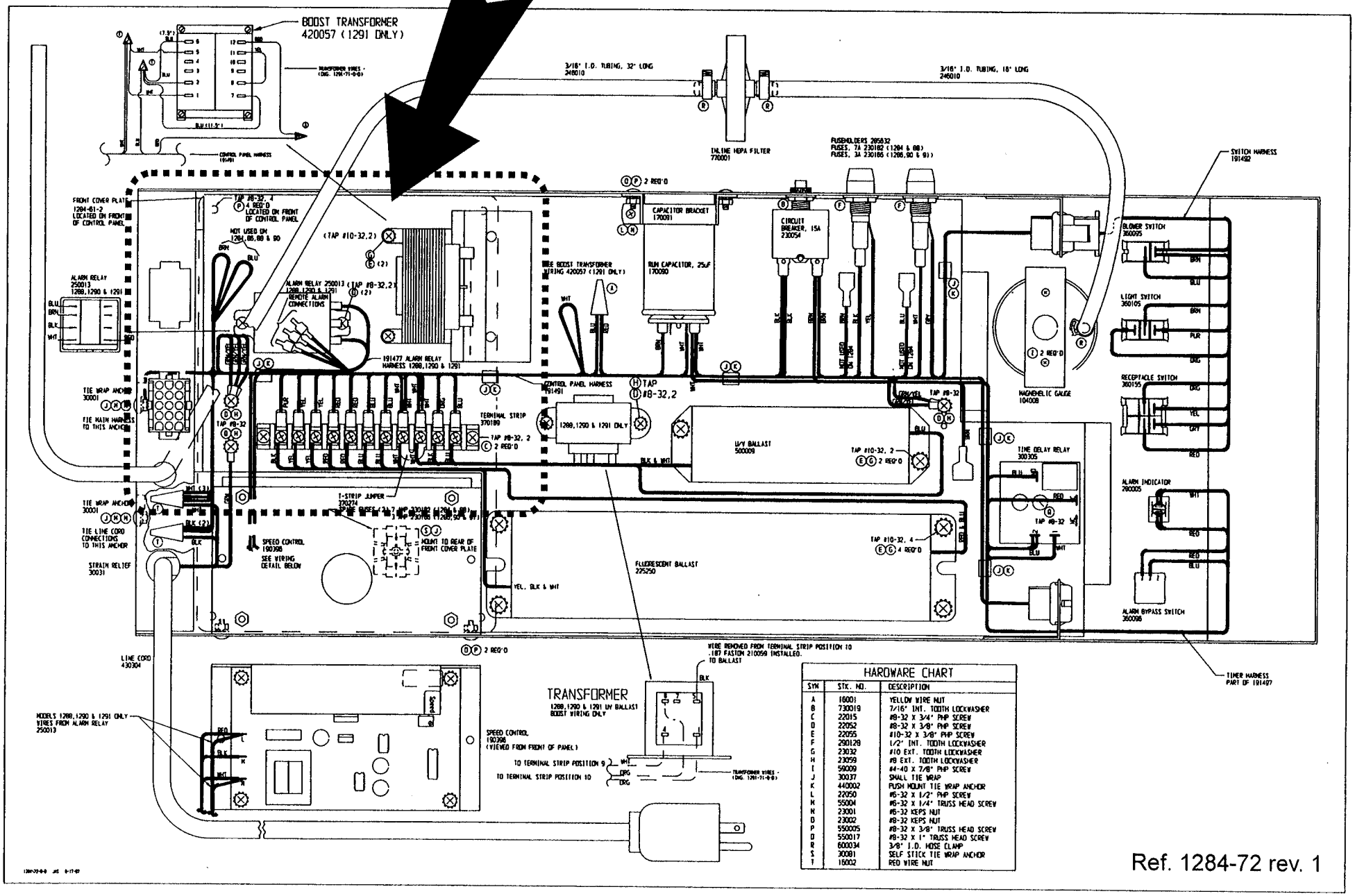

HARDWARE CHART		
SYM	STK. NO.	DESCRIPTION
A	16001	YELLOW WIRE NUT
B	730019	7/16" INT. TOOTH LOCKWASHER
C	22015	#8-32 X 3/4" PHP SCREW
D	22052	#8-32 X 3/8" PHP SCREW
E	22055	#10-32 X 3/8" PHP SCREW
F	290128	1/2" INT. TOOTH LOCKWASHER
G	23032	#10 EXT. TOOTH LOCKWASHER
H	23059	#8 EXT. TOOTH LOCKWASHER
I	59009	#4-40 X 7/8" PHP SCREW
J	30037	SMALL TIE WRAP
K	440002	PUSH MOUNT TIE WRAP ANCHOR
L	22050	#6-32 X 1/2" PHP SCREW
M	55004	#6-32 X 1/4" TRUSS HEAD SCREW
N	23001	#6-32 KEPS NUT
O	23002	#8-32 KEPS NUT
P	550005	#8-32 X 3/8" TRUSS HEAD SCREW
Q	550017	#8-32 X 1" TRUSS HEAD SCREW
R	600034	3/8" I.D. HOSE CLAMP
S	30081	SELF STICK TIE WRAP ANCHOR
T	16002	RED WIRE NUT

Ref. 1284-72 rev. 1

Section 4 – Operation

4.1 Control and Indicating Devices (Refer to Figures 4-1, 4-2, and 4-3)

Before operating the cabinet, become familiar with the following items:

Blower Switch- The blower switch controls power to the internal blower.

Light Switch- The "Lights" switch controls power to the fluorescent lamp or the optional ultraviolet lamp. Both lamps are located in the work area.

Ultra-Violet Light (Optional) - Recommended usage is only when the laboratory is not in use.

Caution! Eyes or skin should not be exposed to ultra-violet light.

On cabinets equipped with the optional ultra-violet germicidal light, the dual purpose "Lights" switch provides the following settings:

"Off" = center

"On" top = fluorescent lamp

"On" bottom = ultra-violet lamp

Either the fluorescent lamp or the ultra-violet lamp may be lit at one time.

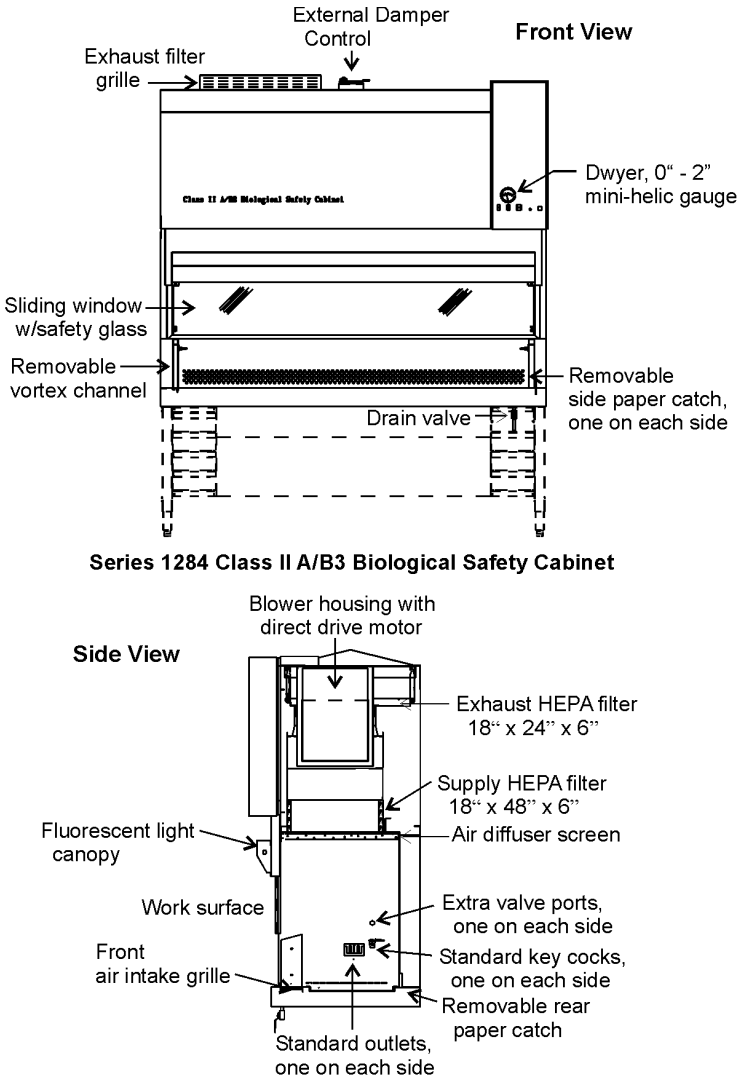

Figure 4-1
4 ft. Series, Models 1284, 1285, and 1288

Alarm By-pass Switch - The Alarm By-pass switch silences the audible "Window Above 10 Inch" alarm for five minutes. The red visual indicator remains illuminated. The alarm rings-back to remind the operator that the window is still open more than 10 inches.

Static Pressure Gauge (In. W.G.) - The static pressure gauge measures the air pressure differential across the filters providing an indication of filter "loading". As the filters become loaded, resistance increases and the reading on the static pressure gauge increases accordingly. When the reading increases by 50% from original measurement, cabinet airflow should be checked with a thermoanemometer. Replace the filters if proper airflow cannot be obtained.

The static pressure gauge should not be used as a direct measure of airflow.

Blower Speed Control - The blower speed control is accessed from the rear of the control panel by removing the screw on the bottom of the control panel and swinging the control panel door open. The blower speed is adjusted by turning the screw on the variable resistor mounted on the circuit board adjacent to the controller. (Refer to Figure 4-4) Turning the screw clockwise increases air velocity; counterclockwise decreases it.

The blower speed is factory-set and should only be changed by a qualified technician.

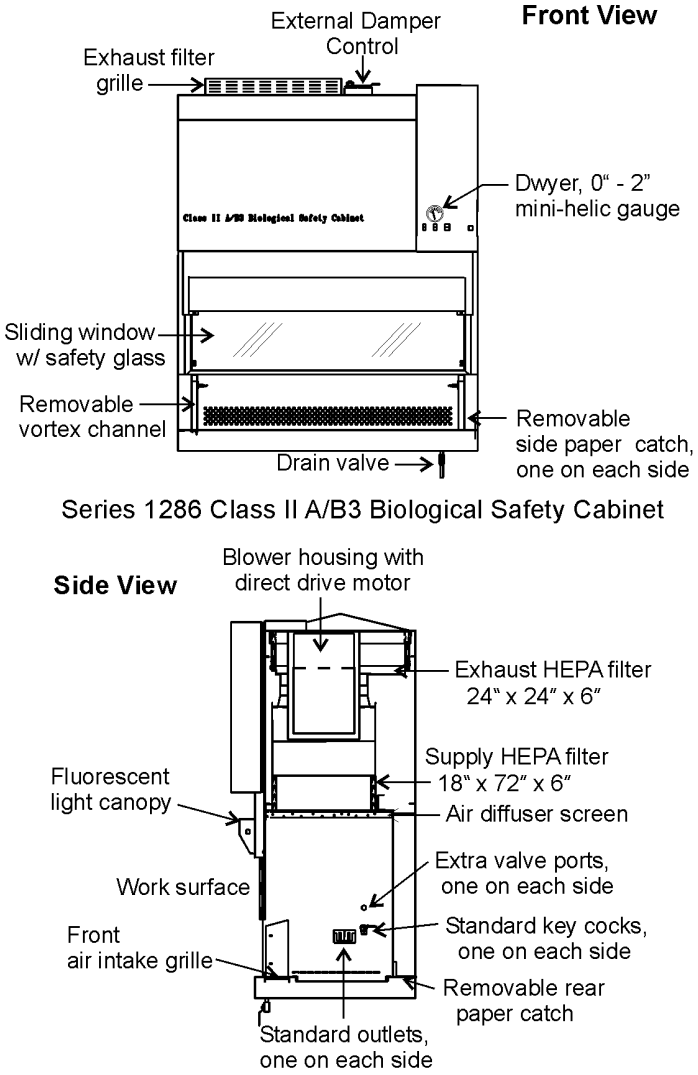

Figure 4-2
6 ft. Series, Models 1286, 1287, 1290, 1291

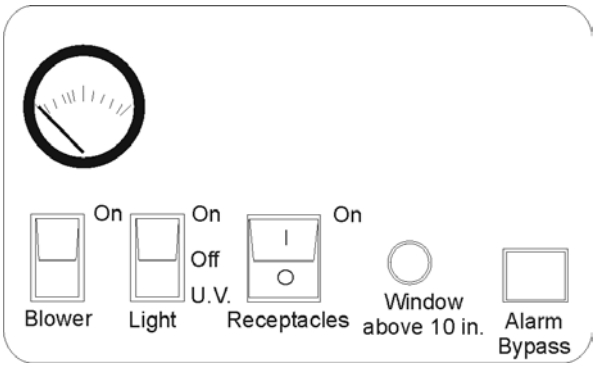

Figure 4-3

Live voltage is present on the control terminals of the switches and dials on the front of the blower panel. Avoid touching these controls when reaching into the control panel and making any adjustments.

Measuring Blower Motor Voltage - Both blower motor voltage and line voltage are measured at the three terminal connectors at the top of the circuit board. Refer to Figure 4-5.

Blower Motor/Lights Reset Button (15 Amp) - The Reset button (located on the left side of the control panel, directly above the Receptacle fuses) is an in-line circuit breaker for the internal blower motor and lighting. If an overload occurs, the circuit breaker will trip and the button will protrude from the panel. Depress the button to reset the circuit breaker.

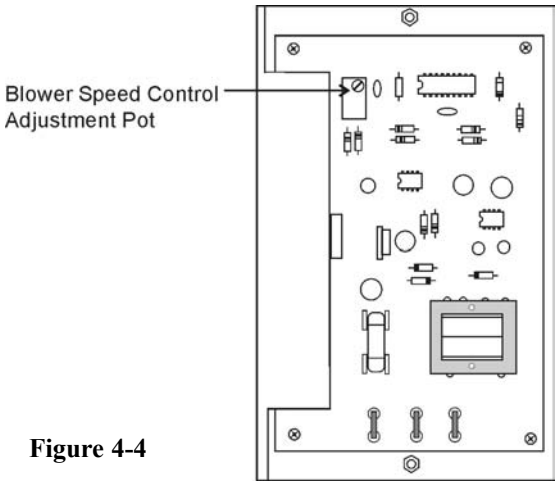

Figure 4-4

Note:
- Turn power off to the blower.
- Turn power off to the lighting.
- Press the blower motor/lighting Reset button.

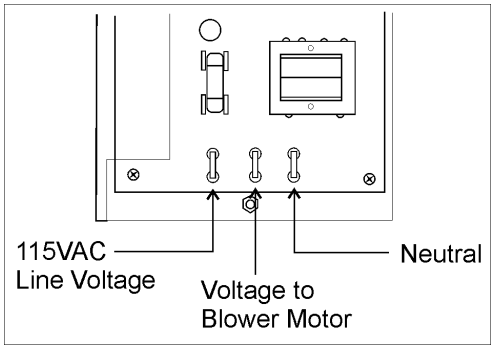

Figure 4-5

Receptacle Fuses (7 Amp - Models 1284/1285/1288, 3 Amp - Models 1286/1287/1290/1291) - The receptacle fuses (2), located directly below the blower motor/lights Reset button, are for the receptacles only. If an overload occurs, the fuses will open and require replacement.

Note:
- Turn the power off.
- Unplug the unit.
- Replace the fuses -
  P/N 230182, 7 Amp, ¼" x 1¼"
  P/N 230166, 3 Amp, ¼" x 1¼"
  (Two spare fuses are located in a bracket on the inside of the control panel.)

Duplex Receptacles - Receptacles (115 Volts) are located on the left and right sidewall of the workstation. Power is controlled by the receptacle switch located on the control panel. The maximum load is 5 amps total for Models 1284, 1285 and 1288. Models 1286, 1287, 1290 and 1291 have a maximum load of 2 amps total. Models 1285 and 1287 are equipped with 2 single European 230V receptacles.

Drain Valve - The drain valve, located on the right front side of the cabinet, is provided for the safe drainage of the drain pan. This valve must remain closed while work is being performed in the cabinet and be used only in the event of a major spill.

If a spill occurs, immediately consult a biological safety officer or other qualified individual for proper procedures. To contain a spill, connect a sealed hose from the drain valve to a sealed container.

Service Valves - Two service valves are standard with each cabinet. These valves are located on the right and left side of the workstation and can be coded with the type of service that they supply. Identification index buttons are supplied.

The cabinet supports four service valves. Additional valves may be purchased from Thermo Forma.

Exhaust Filter Guard - The exhaust filter guard, located on top of the exhaust filter, protects the exhaust airflow and prevents the storage of objects on top of the housing.

Sliding Window Assembly - The sliding window assembly allows the operator to raise the glass window to place items within the work area. If the sliding window is above the 10-inch level, a red light and audible alarm warns that an unsafe condition exists.

When work is being performed in the cabinet, the sliding window must be at the 10-inch position to avoid contamination to product and personnel.

Section 5 - General Cautions

5.1 Caution Notes

- Following initial installation, the unit must be thoroughly tested and certified.
- All activities to be performed within the cabinet should be approved by a biological safety officer or other qualified individual.
- Since the HEPA filters remove particulates only (not gas), explosive/flammable substances should never be used in the cabinet, unless approved and monitored by a biological safety officer or other qualified individual.
- Ultra-violet lighting should not be used while personnel are using the cabinet. If exposure cannot be avoided, the proper safety gear/clothing must be worn. Consult a biological safety officer or other qualified individual for proper procedures.
- If the cabinet is to be used for biological or toxicological applications, a biological safety officer or other qualified individual must monitor it.
- If the unit needs to be serviced, it must be decontaminated to protect service personnel from contamination. After servicing, the cabinet must be recertified by a qualified certifying agency.
- None of the perforations in the work area may be covered or blocked, as airflow will be disrupted and contamination may occur.
- Paper catches should always be kept free of debris.

Section 6 - Cabinet Start-Up

6.1 General Recommendations

- Keep movement in the room to a minimum when the cabinet is in use.
- Keep all laboratory doors closed to prevent drafts that may disturb critical airflow.
- Pre-plan cabinet use and place everything needed in the cabinet so that nothing passes through the air barrier (in or out) during the procedure.
- Practice good aseptic technique to ensure safe use of the cabinet.
- If a spill occurs, clean it up immediately. Decontaminate the work area and all affected equipment.
- Do not cover or block the exhaust grille.
- Do not cover or block any perforations (air holes) in the work area.

6.2 Use of Auxiliary Equipment in the Cabinet

Use auxiliary equipment in the cabinet only if proper precautions are taken. Appliances used in the work area will cause turbulence, disturb the airflow and need to be carefully managed. The equipment should be placed at the rear of the workspace where it will have minimal effect.

A blender may be used in the cabinet. But because of the amount of aerosol it produces and the turbulence it causes, it is recommended that it be removed from the cabinet as soon as possible.

6.3 Cabinet Checklist

1. Verify that the Drain valve is closed (the handle turned horizontal).
2. Verify that all service valves are closed.
3. Verify that the cardboard exhaust filter protector has been removed.

6.4 Start-Up Procedure

1. Turn the light on.
2. Check the intake and exhaust grilles to ensure they are not blocked.
3. Turn the blower on.
4. Place everything needed into the cabinet.
5. Place the viewing window at 10 inches.

Section 7 - Troubleshooting

7.1 Troubleshooting Guide

The following is a guide to troubleshooting the system. If a contaminated area of the cabinet must be entered to determine and/or resolve the source of a particular problem, *the cabinet must first be decontaminated*.

Servicing of the unit must be performed by qualified service personnel.

Problem 1: Airflow in the cabinet work area and through the exhaust filter is inadequate.

Possible causes:

- Exhaust filter is blocked by laboratory materials or the protective shipping cover.
- If the biological safety cabinet is connected to an exhaust system, there may be inadequate exhaust suction or back pressure in the duct system. The system must be rebalanced to handle the correct air volume. A biological safety officer should be consulted.
- Low voltage is being applied to the blower motor.
- Blower motor or speed control is defective.
- Supply HEPA filter and Exhaust HEPA filter may be loaded. Decontaminate the unit and replace both HEPA filters.

Before any maintenance work is performed in the biological safety cabinet, the unit must first be decontaminated.

Problem 2: Ultra violet light malfunction

Possible causes:

- Check lamp pins and socket ends for contact.
- Starter is defective for the UV light.

Problem 3: Fluorescent light malfunction

Possible causes:

- Check lamp pins and socket ends for contact.
- Lamp is defective.

Problem 4: Loud screeching noise

Possible causes:

- Bearings are bad in the motor blower assembly.
- Blower wheel is rubbing against the housing.

Section 8 - Routine Maintenance

CAUTION

Contains Parts and Assemblies Susceptible to Damage by Electrostatic Discharge (esd)

8.1 Checking the Static Pressure Gauge "Zero"

Note: In order to provide an accurate reading, the indicating needle of the static pressure gauge should be precisely at zero when the cabinet is shut off. If the cabinet is connected to a central exhaust system, the exhaust system must also be shut off.

Following HEPA filter replacement, the static pressure gauge should be checked for zero when the cabinet is shut off. Refer to Section 8.2. When the cabinet is started up and proper airflow balance has been reached, the reading on the gauge should be recorded. This initial reading will serve as a baseline indication of subsequent filter loading. When the reading increases by approximately 50%, the airflow balance should again be checked. Replacement of the filters may be required (Section 9.3).

8.2 Zeroing the Static Pressure Gauge

1. Turn the cabinet off.
2. Remove the front cover from the static pressure gauge by grasping the front cover and turning it counterclockwise.
3. Locate the Allen-type adjustment screw beside the gauge needle.
4. Turn the adjustment screw counterclockwise to lower the reading; clockwise to raise it.

8.3 Adjusting the Damper

Since the HEPA filter resistance may vary from filter to filter (even filters of the same size), a damper has been installed in the cabinet exhaust system for maintaining proper airflow balance. The purpose of the damper is to regulate the amount of exhaust air, intake velocity and supply velocity. The damper has been preset at the factory and should not be readjusted unless the proper velocities cannot be obtained.

Adjustments must be made by qualified personnel only!

1. Layout test grids (refer to Section 8.4).
2. Start-up the cabinet and allow it to run for at least twenty minutes.
3. Take airflow measurements. If airflow specifications are not sufficient, open the control panel and check the voltage on the power switch.

Note: Airflow measurements and voltages are recorded at the factory with the cabinet connected to the appropriate AC power supply.

4. Open the access panel and locate the blower motor circuit board (Figure 4-4 & 4-5). Using a true RMS voltmeter, measure and record the voltage drop across the white and black wires leading to the terminal strip (Figure 4-4). The blower speed control adjustment potentiometer is located on the upper left side of the board. Clockwise adjustment of this potentiometer increases voltage supply to the blower motor, countercloskwise adjustment lowers the voltage supply. Adjust it 2 to 3 volts up or down, depending upon the airflow required. Retake the airflow measurements.

If it is determined that the damper must be adjusted in order for the proper airflow balance to be maintained, adjust it as follows:

1. The damper control (Figure 8-1 below) is located on the top of the cabinet.
2. Loosen the wingnut, move the lever to the desired position and retighten the wingnut.

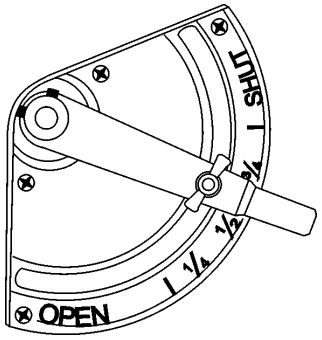

Figure 8-1

Copies of the factory airflow test sheets are available at the end of this manual.

8.4 Biological Safety Cabinet Test Grids

a. 4-foot Series, Models 1284, 1285, and 1288

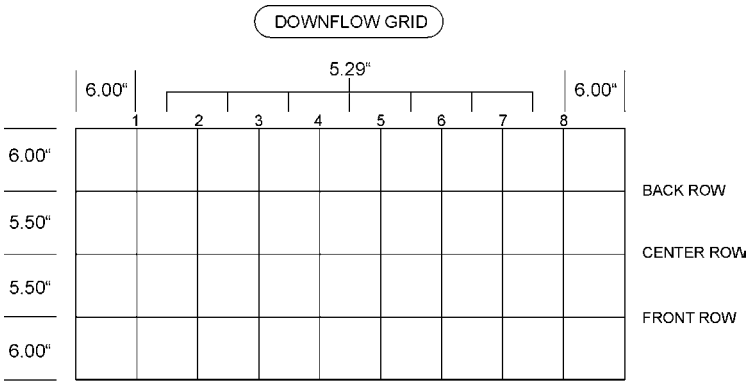

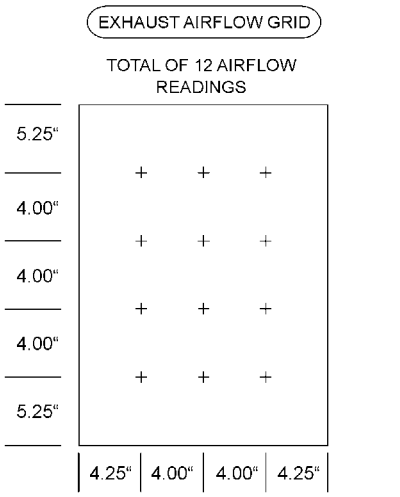

Work access opening face area = 3.385 ft.sq.
Open exhaust area* = 2.428 ft.sq.
*Total area minus obstructed area

b. 6-foot Series, Models 1286, 1287, 1290, and 1291

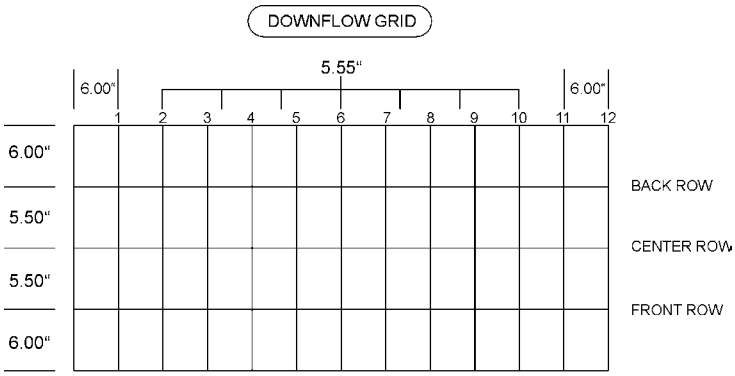

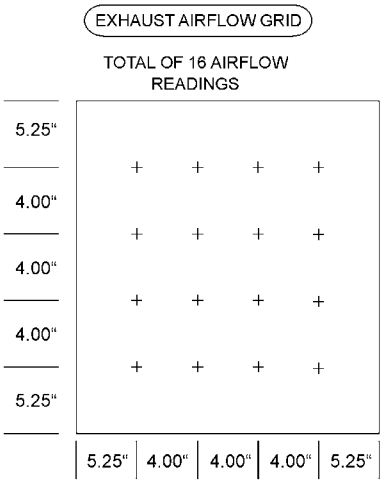

Work access opening face area = 5.052 ft.sq.
Open exhaust area* = 3.368 ft.sq.
*Total area minus obstructed area

Section 9 - Service

Service to the unit must be performed by qualified personnel. Recertify the cabinet after servicing.

Before service is to be performed on the cabinet, the unit must be decontaminated!

9.1 Replacing the Blower Motor (Models, 1284, 1285 and 1288, 4-foot)

a. Reversing the motor wiring (4 foot models only)

1. On the replacement motor: Disconnect the faston connectors securing the Orange wire to the Brown wire and Yellow wire to the Purple wire.
2. Reconnect the Orange wire to the Purple wire and the Yellow wire to the Brown wire.

b. Replacing the motor

1. Turn the unit off and disconnect it from the power source.
2. Remove all dress panels.
3. Remove the access panel.
4. Unfasten the two latches connecting the blower to the air plenum.
5. Remove the bolt toward the front of the cabinet that connects the blower housing bracket to the top of the cabinet.
6. Remove the front screw on the right hand side of the cabinet that connects the blower housing bracket to the right hand wall of the cabinet.
7. Loosen -do not remove- the two remaining bolts that connect the blower housing bracket to the top of the cabinet.
8. Loosen -do not remove- the two remaining screws that connect the blower housing bracket to the right wall of the cabinet.
9. Slide the blower housing toward the rear of the cabinet as far as it will go.
10. Unbolt the removable inlet collar from the blower housing.

11. Unbolt the four-point motor mounting bracket from the blower housing.
12. Disconnect the motor wiring harness at the quick-connect plug.
13. Pull the motor, motor mounting bracket, removable inlet collar and blower wheel out of the blower housing.
14. Be sure to mark on the motor shaft the location of the blower wheel so that the new motor shaft can be lined up correctly with the required blower wheel position to fit properly inside the blower housing.

Note: After the motor is installed, but before replacing the plenum access panel, turn the motor on to ensure that rotation is in the clockwise direction (when viewed from the motor side of the blower).

9.2 Replacing the Blower Motor (Model 1286 Series 6-foot)

1. Turn the unit off and disconnect it from the power source.
2. Remove all dress panels.
3. Remove the access panel.
4. Unfasten the two latches connecting the blower to the air plenum.
5. Remove the two bolts toward the front of the cabinet that connect the blower housing brackets to the top of the cabinet.
6. Loosen - do not remove- the four remaining bolts that connect the blower housing brackets to the top of the cabinet.
7. Slide the blower housing toward the rear of the cabinet as far as it will go.
8. Disconnect the motor wiring harness at the quick-connect plug.
9. Unbolt the removable inlet collar from the blower housing.
10. Pull the motor, motor mounting bracket, removable inlet collar, and blower wheel out of the blower housing.
11. Be sure to mark on the motor shaft the location of the blower wheel so that the new motor shaft can be lined up correctly with the required blower wheel position to fit properly inside the blower housing.

9.3 Replacing the Filters, All Models

Dispose of the old filters per established laboratory practices. If necessary, consult a bio-safety officer or other appropriate person.

1. Turn the unit off and disconnect it from the power source.
2. Close the window.
3. Remove the screw on the bottom left side, which secures the control panel, and swing the panel open.
4. Remove the eight screws securing the dress panel. Remove the panel and set it aside.
5. Remove the four hex nuts securing the lower cross brace and set the brace to the side.
6. Remove all hex nuts securing the pressure plate.
7. Pry the pressure plate loose from the gasket and set it to the side.
8. Pull the Velcro boot loose from the exhaust filter plenum.
9. Release the two latches securing the supply plenum to the blower housing.
10. Disconnect the vinyl tubing that connects the Mag gauge to the plenum.
11. Remove the hex nuts (4 on the four-foot models, 6 on the six-foot models), springs, washers and hold-down brackets securing the plenum.
12. Remove the front filter hold-down studs (2 on the four-foot models, 3 on the six-foot models) in front of the plenum.
13. Slide the plenum from the cabinet.
14. Remove the supply filter and clean the filter flange.
15. Loosen - do not remove- the four bolts, springs and washers that secure the exhaust filter.
16. Slide the exhaust filter out, clean the filter flange and install the new filter, ensuring that *the gasket is on the top*.
17. Tighten the hex nuts to secure the new exhaust filter in position.
18. Install the new supply filter with the *gasket side down*.
19. Reinstall the supply plenum and assemble the components in reverse order.

The cabinet must be recertified after filter replacement.

Assembly Notes:

- Latches connecting the plenum to the blower housing have a safety lock that must be released prior to opening the latch.
- When tightening the filter hold-down nuts, the springs should be compressed from 1/2 to 3/4 of their original height.
- Ensure that the vinyl tubing from the Mag gauge is reconnected to the supply plenum.
- The Velcro connection on the exhaust boot must be smooth with no gaps or loose spots to ensure proper sealing.

Section 10 – Specifications

10.1 Models - 1284, 1285, and 1288 (4' Cabinet with Sliding Window)

Construction

Work Surface: Type 304 Stainless Steel, #4 Finish

Cabinet: Cold Rolled Steel and Type 304 Stainless Steel

Finish: Antique White Baked Powder TCI Hybrid Paint

Dimensions

Exterior: 54.0"W x 64.0"H x 32.5"F-B

Interior: 49.0"W x 28.3"H x 22.25"F-B

Electrical Requirements

1284

Main/Outlets (5): 115VAC, 1 Phase, 2 Wire, 60 Hz, 14 FLA
(Total amps include 5A receptacle)

Circuit Breaker: 20 Amp

Receptacle - NEMA 5-20R

Exhaust System Volume Requirements: 356-390 CFM

1285

Main/Outlets (5): 230VAC, 1 Phase, 2 Wire, 50 Hz, 11 FLA

(Total amps include 5A receptacle)

Circuit Breaker: 15 Amp

Receptacle - European

Exhaust System Volume Requirements: 356-390 CFM

1288

Main/Outlets (5): 100VAC, 1 Phase, 2 Wire, 50 Hz, 14 FLA

(Total amps include 5A receptacle)

Circuit Breaker: 20 Amp

Receptacle - NEMA 5-20R

Exhaust System Volume Requirements: 356-390 CFM

Filters

(1) Supply HEPA Filter (48"W x 18"F-B x 5-7/8"H)

(1) Exhaust HEPA Filter (18"W x 24"F-B x 5-7/8"H)

Lights (2) Fluorescent 60W, (F48T12/CWX/HO)

(1) Optional UV 30W, (G30T8) Germicidal Lamp

Blower Motor 3/4 HP, 1625 RPM

Drain Pan Capacity 18.7 Gallons

10.2 Models - 1286, 1287, 1290 and 1291 (6' Cabinet with Sliding Window)

Construction Work Surface: Type 304 Stainless Steel, #4 Finish

Cabinet: Cold Rolled Steel and Type 304 Stainless Steel

Finish: Antique White Baked-on Powder TCI Hybrid Paint

Dimensions Exterior: 78.0"W x 64.0"H x 32.5"F-B

Interior: 73.0"W x 28.3"H x 22.25"F-B

Electrical Requirements

1286 Main/ Outlets (5): 115VAC, 1 Phase, 2 Wire, 60 Hz, 15 FLA

(Total amps include 2A receptacle)

Circuit Breaker: 20 Amps

Receptacle - NEMA 5-15R

Exhaust System Volume Requirements: 530-581 CFM

1287 Main/Outlets (5): 230VAC, 1 Phase, 2 Wire, 50 Hz, 8.5 FLA

(Total amps include 2A receptacle)

Circuit Breaker: 20 Amps

Receptacle - European

Exhaust System Volume Requirements: 530-581 CFM

1290 Main/Outlets (5): 100VAC, 1 Phase, 2 Wire, 50 Hz, 13.5 FLA

(Total amps include 2A receptacle)

Circuit Breaker: 20 Amps

Receptacle - NEMA 5-15R

Exhaust System Volume Requirements: 530-581 CFM

1291 Main/Outlets (5): 100VAC, 1 Phase, 2 Wire, 60 Hz, 16 FLA

(Total amps include 2A receptacle)

Circuit Breaker: 20 Amps

Receptacle - NEMA 5-15R

Exhaust System Volume Requirements: 530-581 CFM

Filters (1) Supply HEPA Filter (72"W x 18"F-B x 5-7/8"H)

(1) Exhaust HEPA Filter (24"W x 24"F-B x 5-7/8"H)

Lights

1286/1290/1291 (2) Fluorescent 85W, (F72T12/N/HO)

1287 (2) Fluorescent 85W, (F72T12/CW/HO)

(1) Optional UV 30W, (G30T8) Germicidal Lamp

Blower Motor 3/4 HP, 1500 RPM

Drain Pan Capacity 27.0 Gallons

Section 11 – Accessories

Description	Order Number
Service Valve, Vacuum	191141
Service Valve, Air	191142
Service Valve, Nitrogen	191143
Service Valve, Gas	191144
UV Light, 30W	191419
UV Light, 30W portable	191070
Duplex Outlet, ground fault (R.S.)	191540
IV Rod, stainless steel, 4' cabinet	191571
IV Rod, stainless steel, 6' cabinet	191572
Adjustable Foot Rest, 4' cabinet	191127
Low Air Flow Alarm	191168
Exhaust Transition	191570
Adjustable Stand, 4' cabinet	191550
Adjustable Stand, 6' cabinet	191551
ADA Control Panel*	191496

*factory installed

Section 12 - Parts List

12.1 Model 1284

Stock #	Description
156106	3/4 HP Blower Motor (1625 RPM)
170045	Capacitor, Motor 25MFD, 370V
190396	Motor Speed Control
225250	Ballast (Fluorescent Lighting)
141042	48" Fluorescent Lamp (60W, HO)
230054	Circuit Breaker, 15A SP
430304	Line cord Assembly, 20A, 120V, Hospital Grade
760178	Filter, Supply HEPA 18" x 48" x 5-7/8" (Donaldson P/N P195042, Pressure Range: 0.78"-1.05" at 890 cfm) filter drop pressure tested per IES-RP-CC001.3 *See page 12.3
760179	Filter, Exhaust HEPA 18" x 24" x 5-7/8" (Donaldson P/N P194683, Pressure Range: 0.40"-0.65" at 360 cfm) filter drop pressure tested per IES-RP-CC001.3 *See page 12.3
500009	Ballast, (UV Lighting)
141014	30W Germicidal Lamp
280005	Pilot Light, #312, Red
300305	Delay Relay, (fixed 5 min.)
360095	Rocker Switch, SPST, Flat Black
360096	Push-button Switch, SPDT
360105	Rocker Switch, SPDT
249025	Valve Body w/Tip
104008	Gauge, Static Pressure
360146	Rocker Switch, DPST
230182	Fuses, 7 Amp, 1/4" x 1-1/4"

The parts for the Model 1285 are the same as those listed above with the addition of the following:

Stock #	Description
275012	Transformer, 1.5KVA, 240/120V
460052	European Plug, 230V, 16A

The parts for the Model 1288 are the same as the Model 1284 with the addition of:

Stock #	Description
420098	Transformer, 12VA, 115V primary/12.6V secondary

12.2 Model 1286

Stock #	Description
156109	HP Blower Motor (1500 RPM)
170045	Capacitor, Motor 25MFD, 370V
190396	Motor Speed Control
225250	Ballast (Fluorescent Lighting)
141043	72” Fluorescent Lamp (85W, HO)
230054	Circuit Breaker, 15A SP
430304	Line cord Assembly, 20A, 120V, Hospital Grade
760180	Filter, Supply HEPA 18” x 72” x 5-7/8” (Donaldson P/N P195043, Pressure Range: 0.78”-1.05” at 1350 cfm) filter drop pressure tested per IES-RP-CC001.3 *See page 12.3
760181	P/N P195118, Pressure Range: 0.30”-0.50” at 352 cfm) filter drop pressure tested per IES-RP-CC001.3 *See page 12.3
500009	Ballast, (UV Lighting)
141014	30W Germicidal Lamp
300305	Delay Relay, (fixed 5 min.)
280005	Pilot Light, #312, Red
360096	Push-button Switch, SPDT
360095	Rocker Switch, SPST, Flat Black
360105	Rocker Switch, SPDT
249025	Valve Body w/Tip
104008	Gauge, Static Pressure
360146	Rocker Switch, DPST
230166	Fuses, 3 Amp 1/4” x 1-1/4”

The parts for the Model 1287 are the same as Model 1286 with the addition of:

Stock #	Description
275012	Transformer, 1.5KVA, 240/120V
460052	European Plug, 230V, 16A
225418	72” Fluorescent lamp (85W, HO)

The parts for the Model 1290 are the same as Model 1286 with the addition of:

Stock #	Description
225418	72” Fluorescent lamp, 115V primary/12.6V secondary
420098	Transformer, 12VA, 115V primary/ 12.6V secondary

The parts for the Model 1291 are the same as the Model 1286 with the addition of:

Stock #	Description
420098	Transformer, 12VA, 115V primary/12.6V secondary
420057	Transformer, 175A, dual primary/dual secondary

*Filter Pressure Drop Conversion

Pressure drop across a HEPA filter is linear which allows one to accurately predict the pressure drop at various CFM if given a starting value. It is a straight proportion from one setting to the other.

Example:

A filter rating of 0.31” of water at 352 CFM needs to be converted to 530 CFM.

The formula is as follows:

$$\frac{0.31}{352} = \frac{x}{530}$$

Solving for x (the needed pressure drop at 530 CFM)

$$x=\left(\frac{0.31}{352}\right)*530$$

x=0.47” of water (rounded)

POWER CONNECTION
115 VAC, 1PH, 2W, 60HZ, 9FLA (EXCLUDING RECEPTACLES)

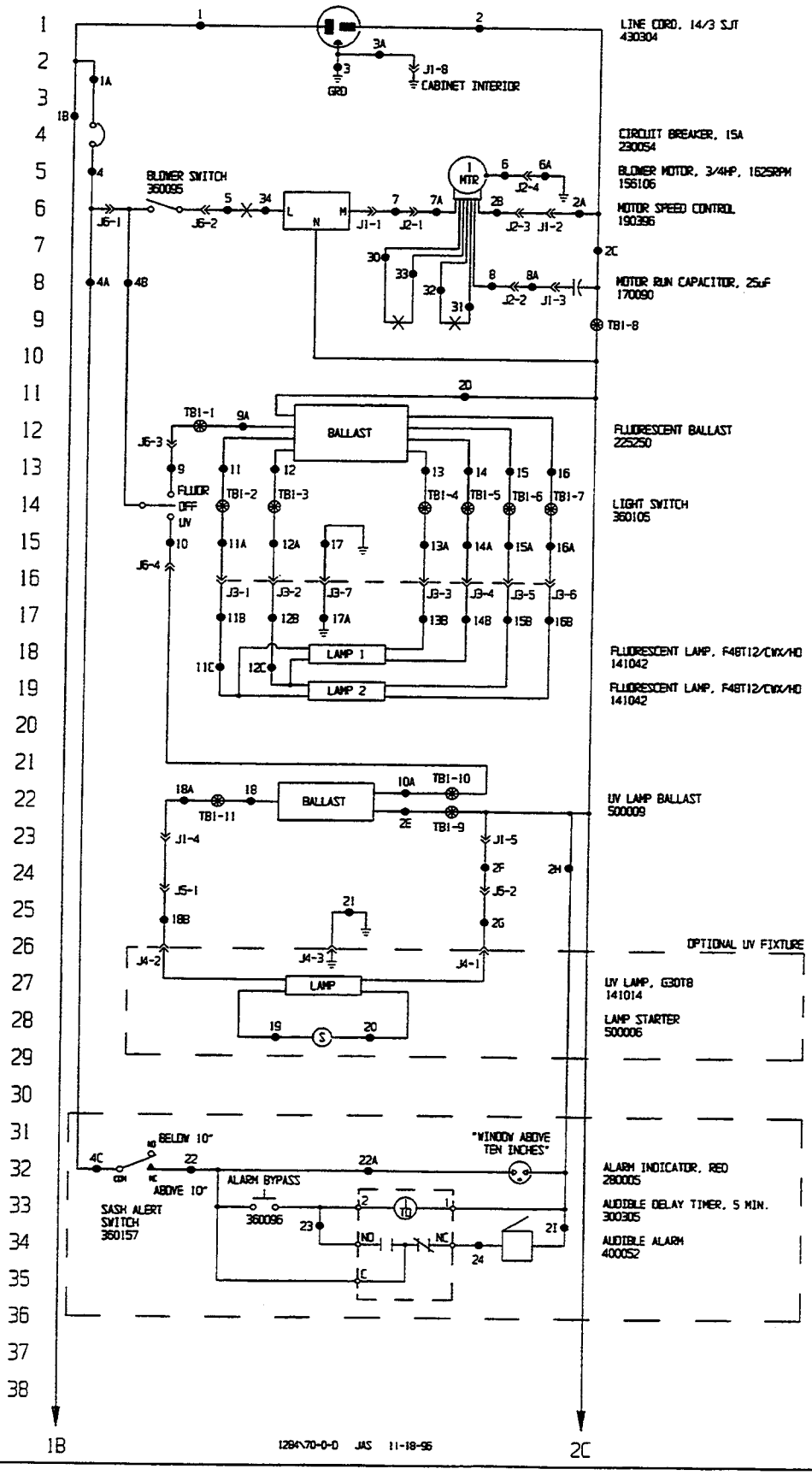

Electrical Schematic
Forma Model:
1284
Bio-Safety Cabinet

1284-70-0-D Rev. 4
Page 1 of 3

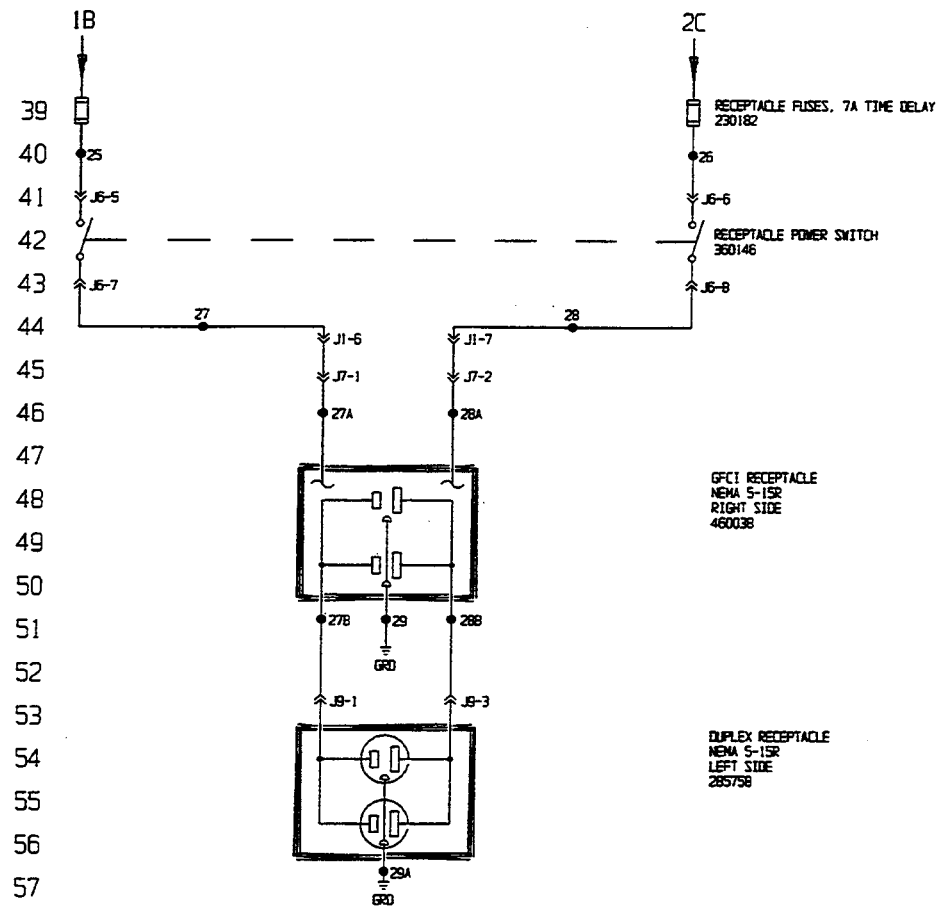

Electrical Schematic
Forma Model:
1284
Bio-Safety Cabinet

1284-70-0-D Rev. 4
Page 2 of 3

WIRE REFERENCE CHART

WIRE NO.	GAUGE	COLOR
1	14	BLACK
1A	14	BLACK
1B	16	BLACK
2	14	WHITE
2A	16	WHITE
2B	18	WHITE
2C	16	WHITE
2D	18	WHITE
2E	18	WHITE
2F	16	GRAY
2G	18	WHITE
2H	20	WHITE
2I	18	WHITE
3	14	GREEN/YELLOW
3A	16	GREEN/YELLOW
4	14	BROWN
4A	20	BROWN
4B	16	BROWN
4C	18	ORANGE
5	16	BLUE
6	18	GREEN
6A	16	GREEN
7	16	BLACK
7A	18	BLACK
8	18	BROWN
8A	16	BROWN
9	16	PURPLE
9A	18	BLACK
10	16	ORANGE
10A	18	BLACK
11	18	YELLOW
11A	20	YELLOW
11B	22	YELLOW
11C	18	YELLOW
12	18	YELLOW
12A	20	YELLOW
12B	22	ORANGE
12C	18	YELLOW
13	18	RED
13A	20	RED
13B	22	RED
14	18	RED
14A	20	RED
14B	22	BROWN
15	18	BLUE
15A	20	BLUE
15B	22	BLUE
16	18	BLUE
16A	20	BLUE
16B	22	BLACK
17	16	GREEN
17A	22	GREEN
18	18	BLUE
18A	16	BLUE
18B	18	BLACK
19	18	BLACK
20	18	BLACK
21	18	GREEN
22	18	RED
22A	20	RED
23	20	BLUE
24	18	BLACK
25	16	YELLOW
26	16	GRAY
27	16	ORANGE
27A	18	ORANGE
27B	18	BLACK
28	16	RED
28A	18	RED
28B	18	WHITE
29	18	GREEN
29A	18	GREEN
30	18	BROWN
31	18	ORANGE
32	18	PURPLE
33	18	YELLOW
34	16	RED

NOTES:

⊕	Denotes Terminal Strip Connection		Parts List Reference Number
17D	Last Relay Number	○	Assembly
11	Last Terminal Number	⬠	Panel
34	Last Wire Number	⬡	Refrigeration

CONNECTOR	FUNCTION	LOCATION
J1 (15 POS.)	CABINET PASS-THRU CONN.	CONTROL PANEL (TOP REAR)
J2 (5 POS.)	BLOWER MOTOR	CAB. TOP HOUSING (INTERIOR)
J3 (9 POS.)	FLUORESCENT LIGHTING	CONTROL PANEL (INTERIOR)
J4 (4 POS.)	U/V LAMP RECEPTACLE	WORK CHAMBER (RIGHT SIDE)
J5 (2 POS.)	U/V RECEPTACLE CONN.	CAB. TOP HOUSING (INTERIOR)
J6 (5 POS.)	SWITCH PANEL CONNECTIONS	CONTROL PANEL (INTERIOR)
J7 (2 POS.)	RIGHT RECEPTACLE CORD	CAB. TOP HOUSING (INTERIOR)
~~J8 (15 POS.)~~	~~RIGHT SIDE RECEPTACLE~~	~~RIGHT RECEPTACLE BOX~~
J9 (3 POS.)	LEFT RECEPTACLE CORD	CAB. TOP HOUSING (INTERIOR)
TB1 (11 POS.)	BALLAST CONNECTIONS	CONTROL PANEL

CUSTOMER APPROVAL/REFERENCE

APPROVED BY _____

APPROVING FIRM _____

DATE OF APPROVAL _____

THIS DOCUMENT CONTAINS PROPRIETARY INFORMATION AND SUCH INFORMATION IS NOT TO BE DISCLOSED TO OTHERS FOR ANY PURPOSE NOR USED FOR MANUFACTURING PURPOSES WITHOUT WRITTEN PERMISSION FROM FORMA SCIENTIFIC

Forma Scientific

REV	ECR NO.	DATE	BY	CAD	APPD	DESCRIPTION OF REVISION
4	HO-1207	07-31-98	BOB	KDG	HEG	RIGHT GFIC RECEPT. TO STANDARD
3	SI-6557	07-07-98	DWL	KDG	LDN	CHANGED 360155 SWITCH TO 360146
2	HO-1179	04-14-98	RTT	PDK	LDN	CORRECT WIRES 31 & 33
1	HO-1159	01-20-98	RTT	RTT	DS	CHG FROM CSO TO CWX LAMPS
0	N/A	10-28-97	RTT	RTT	DS	RELEASED FOR PRODUCTION

DATE 11-18-96	DWN JAS	CAD JAS	APPD DS	SCALE NTS	
CUSTOMER					
JOB TITLE 1284 4FT. BIO-SAFETY CABINET					
DWG TITLE ELECTRICAL SCHEMATIC					
LOCATION HOODS	JOB NUMBER	DRAWING NUMBER 1284-70-0-D			

Electrical Schematic
Forma Model:
1284
Bio-Safety Cabinet

1284-70-0-D Rev. 4

POWER CONNECTION
230 VAC, 1PH, 2W, 50HZ, 6FLA (EXCLUDING RECEPTACLES)

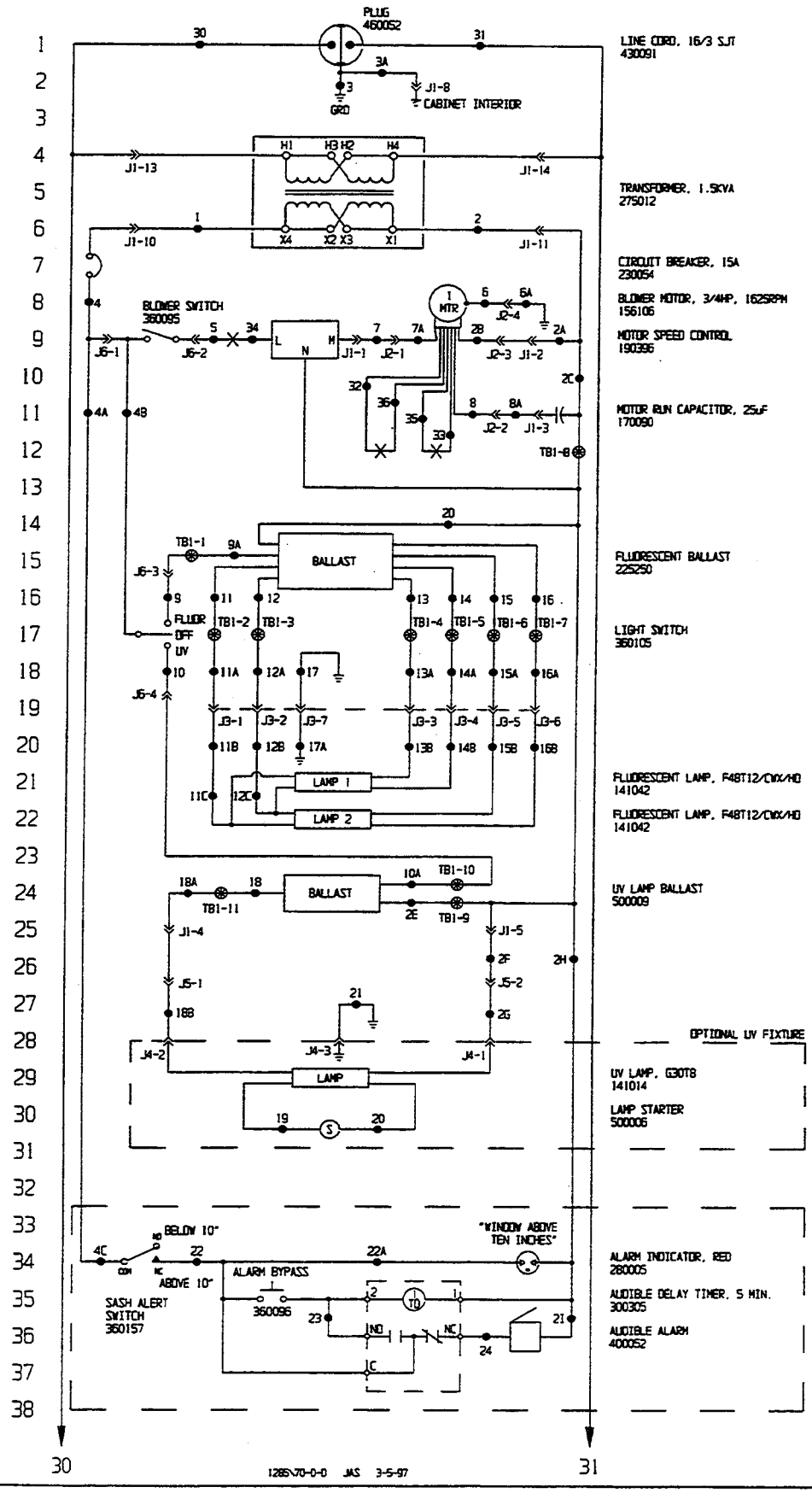

Electrical Schematic
Forma Model:
1285
Bio-Safety Cabinet

1285-70-0-D Rev. 4
Page 1 of 3

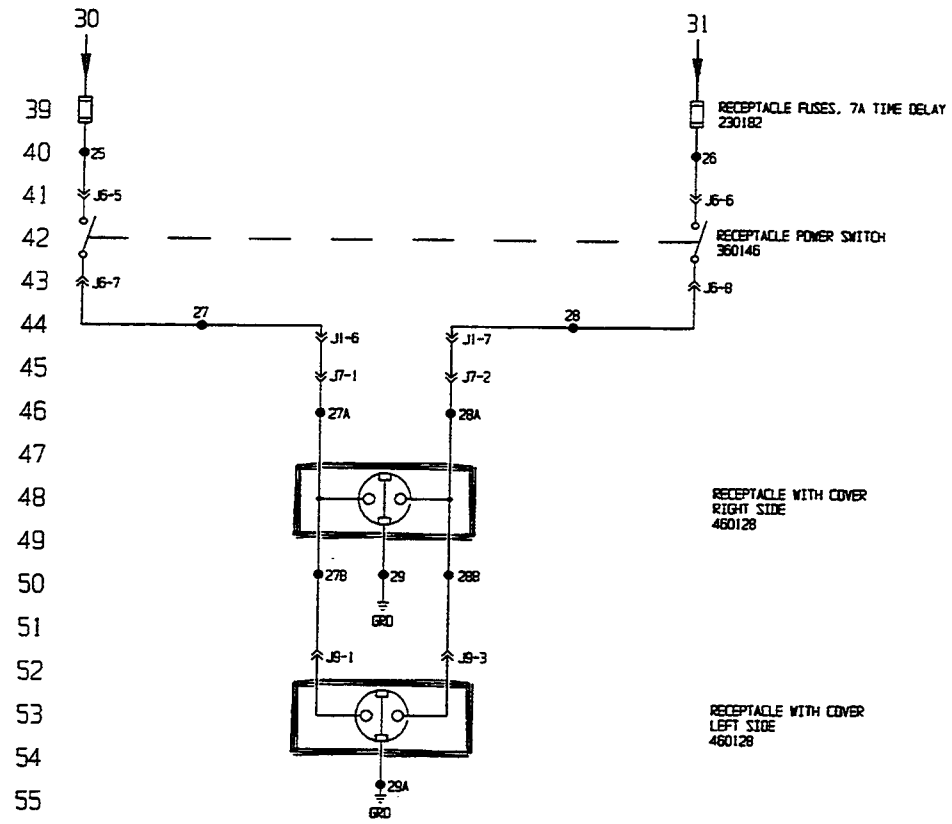

Electrical Schematic
Forma Model:
1285
Bio-Safety Cabinet

1285-70-0-D Rev. 4
Page 2 of 3

WIRE REFERENCE CHART

WIRE NO.	GAUGE	COLOR
1	14	BLACK
1A	14	BLACK
1B	16	BLACK
2	14	WHITE
2A	16	WHITE
2B	18	WHITE
2C	16	WHITE
2D	18	WHITE
2E	18	WHITE
2F	16	GRAY
2G	18	WHITE
2H	20	WHITE
2I	18	WHITE
3	14	GREEN/YELLOW
3A	16	GREEN/YELLOW
4	14	BROWN
4A	20	BROWN
4B	16	BROWN
4C	18	ORANGE
5	16	BLUE
6	18	GREEN
6A	16	GREEN
7	16	BLACK
7A	18	BLACK
8	18	BROWN
8A	16	BROWN
9	16	PURPLE
9A	18	BLACK
10	16	ORANGE
10A	18	BLACK
11	18	YELLOW
11A	20	YELLOW
11B	22	YELLOW
11C	18	YELLOW
12	18	YELLOW
12A	20	YELLOW
12B	22	ORANGE
12C	18	YELLOW
13	18	RED
13A	20	RED
13B	22	RED
14	18	RED
14A	20	RED
14B	22	BROWN
15	18	BLUE
15A	20	BLUE
15B	22	BLUE
16	18	BLUE
16A	20	BLUE
16B	22	BLACK
17	16	GREEN
17A	22	GREEN
18	18	BLUE
18A	16	BLUE
18B	18	BLACK
19	18	BLACK
20	18	BLACK
21	18	GREEN
22	18	RED
22A	20	RED
23	20	BLUE
24	18	BLACK
25	16	YELLOW
26	16	GRAY
27	16	ORANGE
27A	18	ORANGE
27B	18	BLACK
28	16	RED
28A	18	RED
28B	18	WHITE
29	18	GREEN
29A	18	GREEN
30	16	BROWN
31	16	BLUE
32	18	BROWN
33	18	ORANGE
34	16	RED
35	18	PURPLE
36	18	YELLOW

NOTES:

⊕	Denotes Terminal Strip Connection		Parts List Reference Number
ITD	Last Relay Number	○	Assembly
11	Last Terminal Number	⌂	Panel
36	Last Wire Number	○	Refrigeration

CONNECTOR	FUNCTION	LOCATION
J1 (15 POS.)	CABINET PASS-THRU CONN.	CONTROL PANEL (TOP REAR)
J2 (5 POS.)	BLOWER MOTOR	CAB. TOP HOUSING (INTERIOR)
J3 (9 POS.)	FLUORESCENT LIGHTING	CONTROL PANEL (INTERIOR)
J4 (4 POS.)	U/V LAMP RECEPTACLE	WORK CHAMBER (RIGHT SIDE)
J5 (2 POS.)	U/V RECEPTACLE CONN.	CAB. TOP HOUSING (INTERIOR)
J6 (5 POS.)	SWITCH PANEL CONNECTIONS	CONTROL PANEL (INTERIOR)
J7 (2 POS.)	RIGHT RECEPTACLE CORD	CAB. TOP HOUSING (INTERIOR)
J8 (5 POS.)	RIGHT SIDE RECEPTACLE	RIGHT RECEPTACLE BOX
J9 (3 POS.)	LEFT RECEPTACLE CORD	CAB. TOP HOUSING (INTERIOR)
TB1 (11 POS.)	BALLAST CONNECTIONS	CONTROL PANEL

CUSTOMER APPROVAL/REFERENCE

APPROVED BY _____

APPROVING FIRM _____

DATE OF APPROVAL _____

THIS DOCUMENT CONTAINS PROPRIETARY INFORMATION AND SUCH INFORMATION IS NOT TO BE DISCLOSED TO OTHERS FOR ANY PURPOSE NOR USED FOR MANUFACTURING PURPOSES WITHOUT WRITTEN PERMISSION FROM FORMA SCIENTIFIC

Forma Scientific

BOX 649 MARIETTA, OHIO 45750
TOLL FREE USA 800-848-3080, OHIO 614-373-4763

REV	ECR NO.	DATE	BY	CAD	APPD	DESCRIPTION OF REVISION
4	HO-1207	07-31-98	BDB	KDG	HEG	REMOVED CONNECTORS, RIGHT RECEPT.
3	SI-6557	07-07-98	DML	KDG	LDN	CHANGED 360155 SWITCH TO 360146
2	HO-1179	04-14-98	RTT	PDK	LDN	CORRECT WIRES 33 & 35
1	HO-1159	01-20-98	RTT	RTT	DS	CHG FROM C50 TO CWX LAMPS
0	N/A	10-27-97	RTT	RTT	DS	RELEASED FOR PRODUCTION

DATE 03-05-97	DWN JAS	CAD JAS	APPD DS	SCALE NTS	
CUSTOMER					
JOB TITLE 1285 4FT. BIO-SAFETY CABINET - 230V/50HZ					
DWG TITLE ELECTRICAL SCHEMATIC					
LOCATION HOODS	JOB NUMBER	DRAWING NUMBER 1285-70-0-D			

Electrical Schematic
Forma Model:
1285
Bio-Safety Cabinet

1285-70-0-D Rev. 4

POWER CONNECTION
115 VAC, 1PH, 2W, 60HZ, 13FLA (EXCLUDING RECEPTACLES)

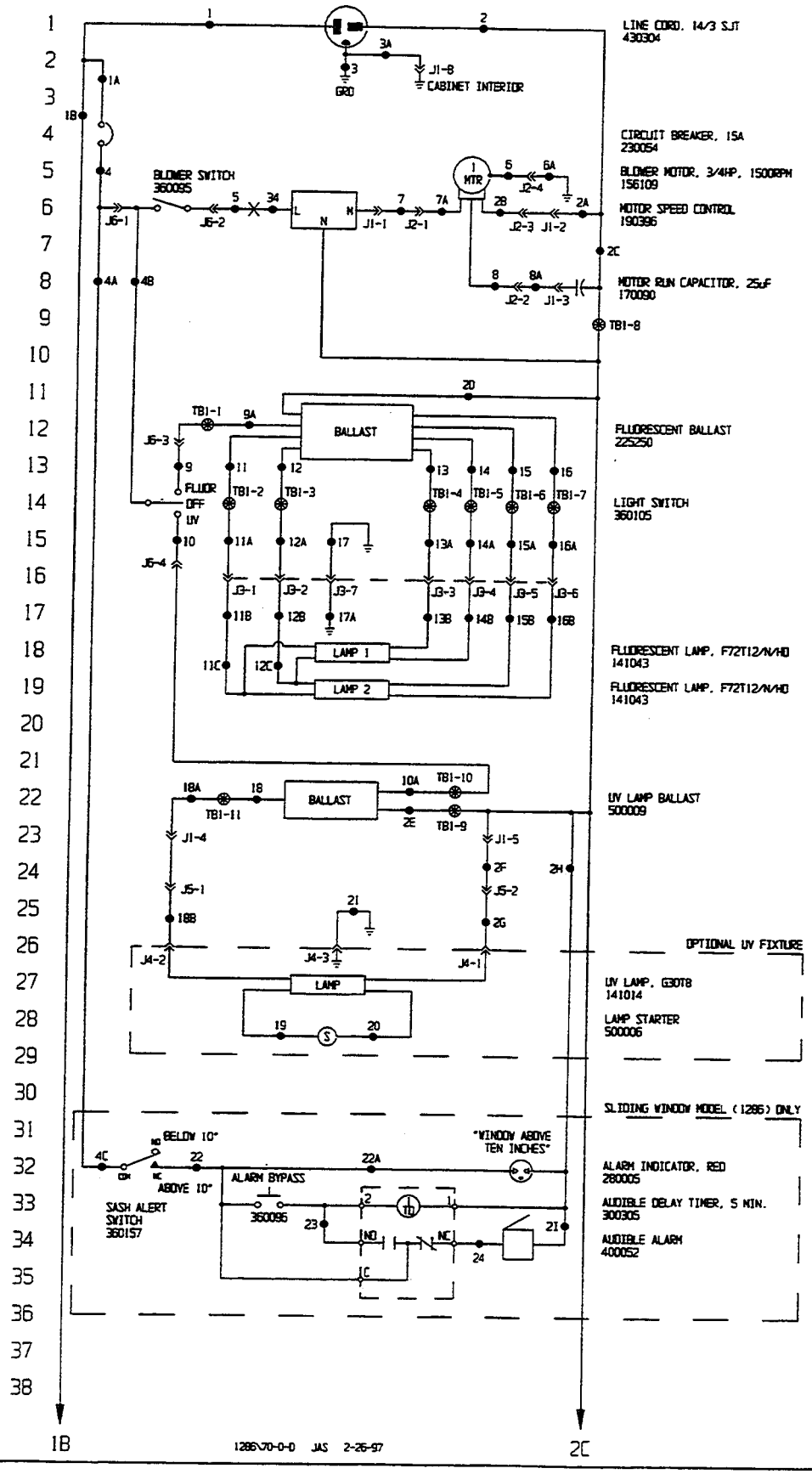

Electrical Schematic
Forma Model:
1286
Bio-Safety Cabinet

1286-70-0-D Rev. 3
Page 1 of 3

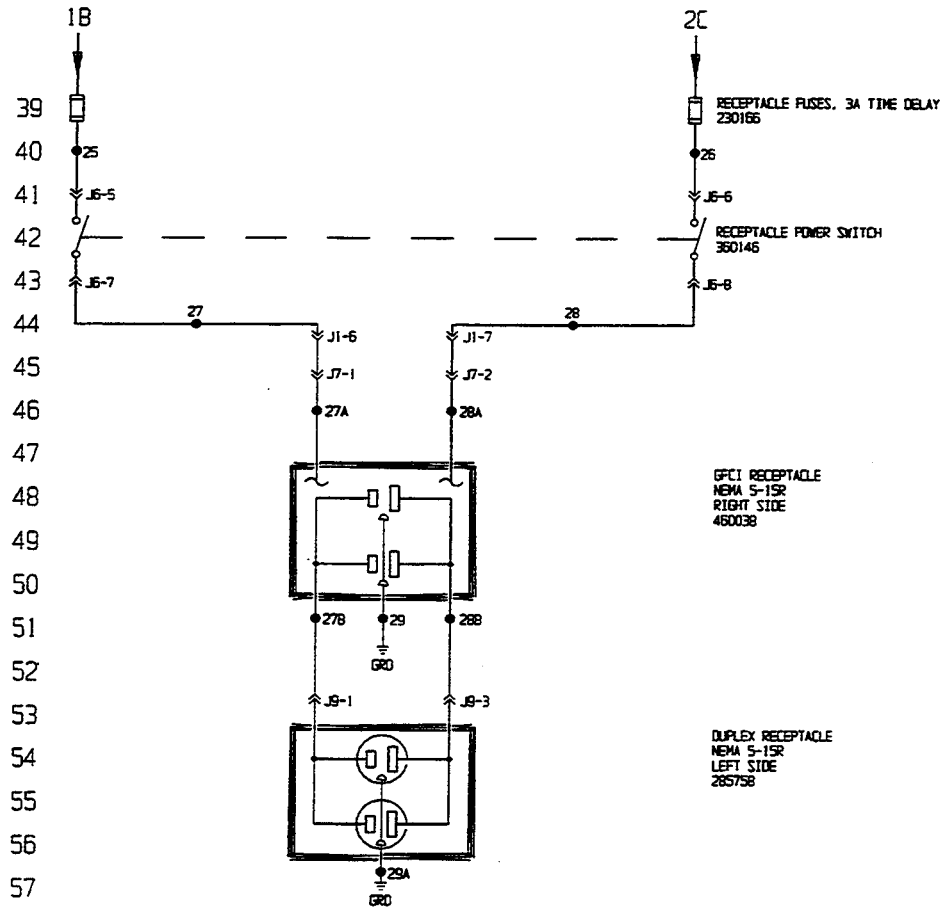

Electrical Schematic
Forma Model:
1286
Bio-Safety Cabinet

1286-70-0-D Rev. 3
Page 2 of 3

WIRE REFERENCE CHART

WIRE NO.	GAUGE	COLOR
1	14	BLACK
1A	14	BLACK
1B	16	BLACK
2	14	WHITE
2A	16	WHITE
2B	18	WHITE
2C	16	WHITE
2D	18	WHITE
2E	18	WHITE
2F	16	GRAY
2G	18	WHITE
2H	20	WHITE
2I	18	WHITE
3	14	GREEN/YELLOW
3A	16	GREEN/YELLOW
4	14	BROWN
4A	20	BROWN
4B	16	BROWN
4C	18	ORANGE
5	16	BLUE
6	18	GREEN
6A	16	GREEN
7	16	BLACK
7A	18	BLACK
8	18	BROWN
8A	16	BROWN
9	16	PURPLE
9A	18	BLACK
10	16	ORANGE
10A	18	BLACK
11	18	YELLOW
11A	20	YELLOW
11B	22	YELLOW
11C	18	YELLOW
12	18	YELLOW
12A	20	YELLOW
12B	22	ORANGE
12C	18	YELLOW
13	18	RED
13A	20	RED
13B	22	RED
14	18	RED
14A	20	RED
14B	22	BROWN
15	18	BLUE
15A	20	BLUE
15B	22	BLUE
16	18	BLUE
16A	20	BLUE
16B	22	BLACK
17	16	GREEN
17A	22	GREEN
18	18	BLUE
18A	16	BLUE
18B	18	BLACK
19	18	BLACK
20	18	BLACK
21	18	GREEN
22	18	RED
22A	20	RED
23	20	BLUE
24	18	BLACK
25	16	YELLOW
26	16	GRAY
27	16	ORANGE
27A	18	ORANGE
27B	18	BLACK
28	16	RED
28A	18	RED
28B	18	WHITE
29	18	GREEN
29A	18	GREEN
30	N/A	N/A
31	N/A	N/A
32	N/A	N/A
33	N/A	N/A
34	16	RED

NOTES:

⊗	Denotes Terminal Strip Connection		Parts List Reference Number
1TD	Last Relay Number	○	Assembly
11	Last Terminal Number	⌒	Panel
34	Last Wire Number	○	Refrigeration

CONNECTOR	FUNCTION	LOCATION
J1 (15 POS.)	CABINET PASS-THRU CONN.	CONTROL PANEL (TOP REAR)
J2 (5 POS.)	BLOWER MOTOR	CAB. TOP HOUSING (INTERIOR)
J3 (9 POS.)	FLUORESCENT LIGHTING	CONTROL PANEL (INTERIOR)
J4 (4 POS.)	U/V LAMP RECEPTACLE	WORK CHAMBER (RIGHT SIDE)
J5 (2 POS.)	U/V RECEPTACLE CONN.	CAB. TOP HOUSING (INTERIOR)
J6 (5 POS.)	SWITCH PANEL CONNECTIONS	CONTROL PANEL (INTERIOR)
J7 (2 POS.)	RIGHT RECEPTACLE CORD	CAB. TOP HOUSING (INTERIOR)
J8 (5 POS.)	RIGHT SIDE RECEPTACLE	RIGHT RECEPTACLE BOX
J9 (3 POS.)	LEFT RECEPTACLE CORD	CAB. TOP HOUSING (INTERIOR)
TB1 (11 POS.)	BALLAST CONNECTIONS	CONTROL PANEL

CUSTOMER APPROVAL/REFERENCE

APPROVED BY _____

APPROVING FIRM _____

DATE OF APPROVAL _____

THIS DOCUMENT CONTAINS PROPRIETARY INFORMATION AND SUCH INFORMATION IS NOT TO BE DISCLOSED TO OTHERS FOR ANY PURPOSE NOR USED FOR MANUFACTURING PURPOSES WITHOUT WRITTEN PERMISSION FROM FORMA SCIENTIFIC

Forma Scientific

BOX 649 MARIETTA, OHIO 45750
TOLL FREE USA 800-848-3080, OHIO 614-373-4763

REV	ECR NO.	DATE	BY	CAD	APPD	DESCRIPTION OF REVISION
3	HO-1207	07-31-98	BOB	KOG	HEG	RIGHT GFIC RECEPT. TO STANDARD
2	SI-6557	07-07-98	DWL	KOG	LDN	CHANGED 360155 SWITCH TO 360146
1	HO-1179	04-14-98	RTT	PDK	LDN	REMOVED WIRES 30, 31, 32 & 33
0	N/A	11-14-97	RTT	RTT	DS	RELEASED FOR PRODUCTION

DATE 02-26-97	DWN JAS	CAD JAS	APPD DS	SCALE NTS	
CUSTOMER					
JOB TITLE 1286 6FT. BIO-SAFETY CABINET					
DWG TITLE ELECTRICAL SCHEMATIC					
LOCATION HOODS	JOB NUMBER	DRAWING NUMBER 1286-70-0-D			

Electrical Schematic
Forma Model: 1286
Bio-Safety Cabinet

1286-70-0-D Rev. 3

POWER CONNECTION
230 VAC, 1PH, 2W, 50HZ, 6.5FLA (EXCLUDING RECEPTACLES)

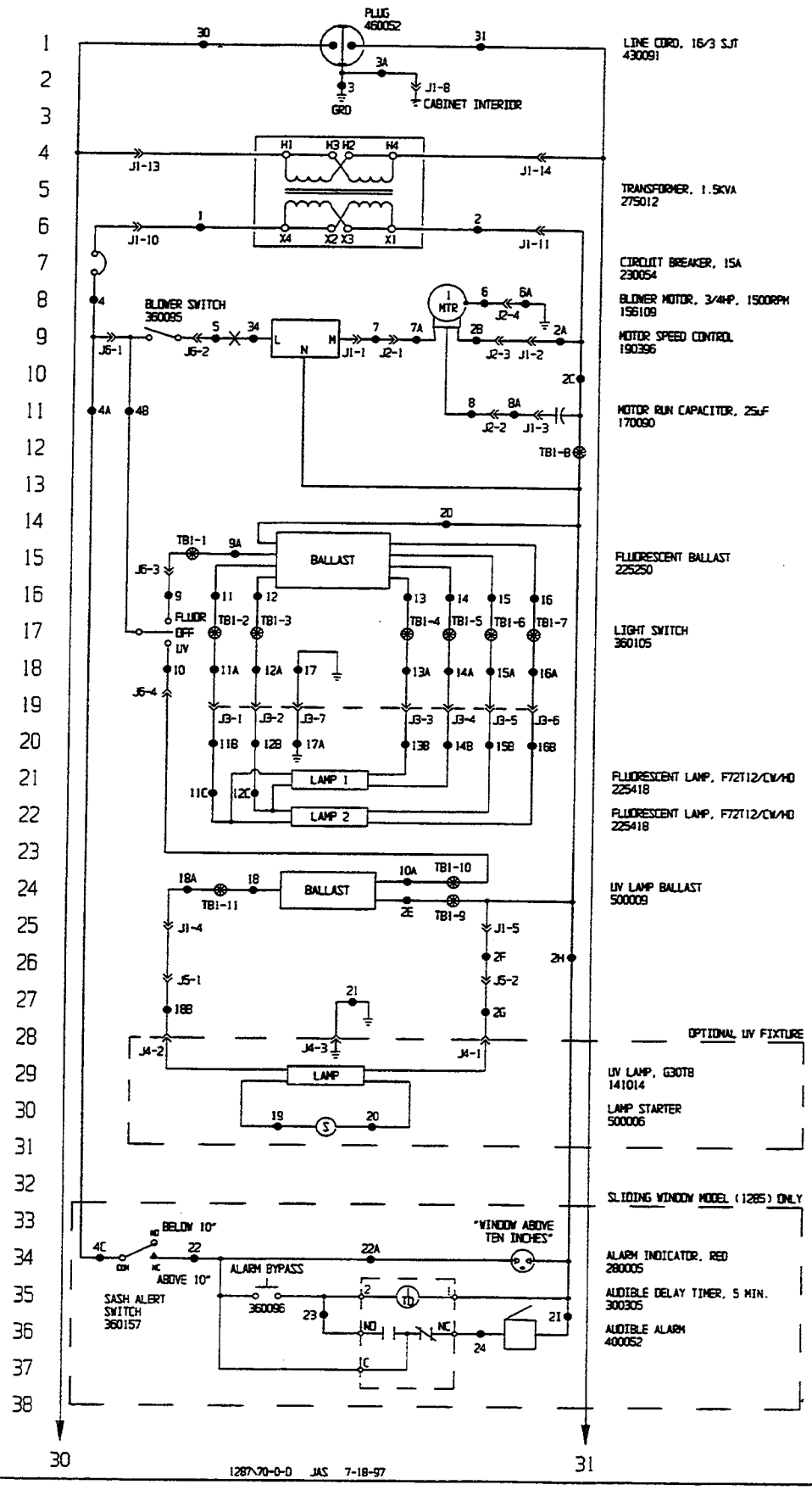

Electrical Schematic
Forma Model:
1287
Bio-Safety Cabinet

1287-70-0-D Rev. 3
Page 1 of 3

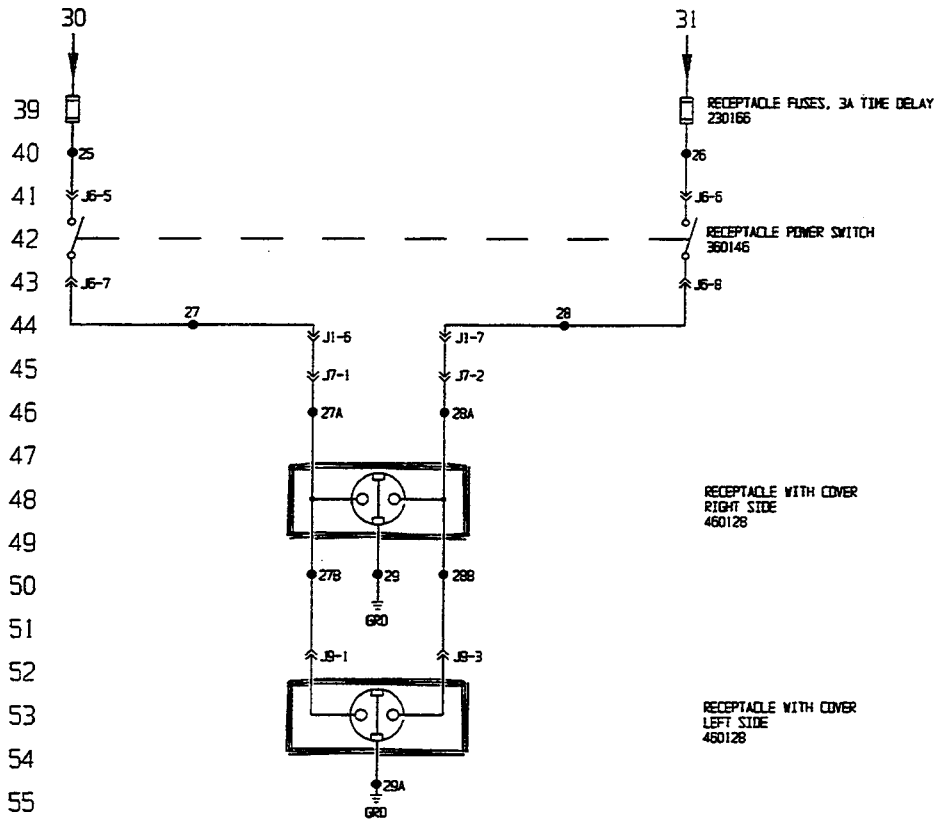

Electrical Schematic
Forma Model:
1287
Bio-Safety Cabinet

1287-70-0-D Rev. 3
Page 2 of 3

WIRE REFERENCE CHART

WIRE NO.	GAUGE	COLOR
1	14	BLACK
1A	14	BLACK
1B	16	BLACK
2	14	WHITE
2A	16	WHITE
2B	18	WHITE
2C	16	WHITE
2D	18	WHITE
2E	18	WHITE
2F	16	GRAY
2G	18	WHITE
2H	20	WHITE
2I	18	WHITE
3	14	GREEN/YELLOW
3A	16	GREEN/YELLOW
4	14	BROWN
4A	20	BROWN
4B	16	BROWN
4C	18	ORANGE
5	16	BLUE
6	18	GREEN
6A	16	GREEN
7	16	BLACK
7A	18	BLACK
8	18	BROWN
8A	16	BROWN
9	16	PURPLE
9A	18	BLACK
10	16	ORANGE
10A	18	BLACK
11	18	YELLOW
11A	20	YELLOW
11B	22	YELLOW
11C	18	YELLOW
12	18	YELLOW
12A	20	YELLOW
12B	22	ORANGE
12C	18	YELLOW
13	18	RED
13A	20	RED
13B	22	RED
14	18	RED
14A	20	RED
14B	22	BROWN
15	18	BLUE
15A	20	BLUE
15B	22	BLUE
16	18	BLUE
16A	20	BLUE
16B	22	BLACK
17	16	GREEN
17A	22	GREEN
18	18	BLUE
18A	16	BLUE
18B	18	BLACK
19	18	BLACK
20	18	BLACK
21	18	GREEN
22	18	RED
22A	20	RED
23	20	BLUE
24	18	BLACK
25	16	YELLOW
26	16	GRAY
27	16	ORANGE
27A	18	ORANGE
27B	18	BLACK
28	16	RED
28A	18	RED
28B	18	WHITE
29	18	GREEN
29A	18	GREEN
30	16	BROWN
31	16	BLUE
32	N/A	N/A
33	N/A	N/A
34	16	RED

NOTES:

⊗	Denotes Terminal Strip Connection	Parts List Reference Number	
1TD	Last Relay Number	○	Assembly
11	Last Terminal Number	⌂	Panel
34	Last Wire Number	○	Refrigeration

CONNECTOR	FUNCTION	LOCATION
J1 (15 POS.)	CABINET PASS-THRU CONN.	CONTROL PANEL (TOP REAR)
J2 (5 POS.)	BLOWER MOTOR	CAB. TOP HOUSING (INTERIOR)
J3 (9 POS.)	FLUORESCENT LIGHTING	CONTROL PANEL (INTERIOR)
J4 (4 POS.)	U/V LAMP RECEPTACLE	WORK CHAMBER (RIGHT SIDE)
J5 (2 POS.)	U/V RECEPTACLE CONN.	CAB. TOP HOUSING (INTERIOR)
J6 (5 POS.)	SWITCH PANEL CONNECTIONS	CONTROL PANEL (INTERIOR)
J7 (2 POS.)	RIGHT RECEPTACLE CORD	CAB. TOP HOUSING (INTERIOR)
J8 (5 POS.)	RIGHT SIDE RECEPTACLE	RIGHT RECEPTACLE BOX
J9 (3 POS.)	LEFT RECEPTACLE CORD	CAB. TOP HOUSING (INTERIOR)
TB1 (11 POS.)	BALLAST CONNECTIONS	CONTROL PANEL

CUSTOMER APPROVAL/REFERENCE

APPROVED BY _____

APPROVING FIRM _____

DATE OF APPROVAL _____

THIS DOCUMENT CONTAINS PROPRIETARY INFORMATION AND SUCH INFORMATION IS NOT TO BE DISCLOSED TO OTHERS FOR ANY PURPOSE NOR USED FOR MANUFACTURING PURPOSES WITHOUT WRITTEN PERMISSION FROM FORMA SCIENTIFIC

Forma Scientific

BOX 649 MARIETTA, OHIO 45750
TOLL FREE USA 800-848-3001, OHIO 614-373-4763

REV	ECR NO.	DATE	BY	CAD	APPD	DESCRIPTION OF REVISION
3	HO-1207	07-31-98	BOB	KOG	HEG	REMOVED CONNECTORS, RIGHT RECEPT.
2	SI-6557	07-07-98	DML	KOG	LDN	CHANGED 360155 SWITCH TO 360146
1	HO-1179	04-14-98	RTT	PDK	LDN	REMOVED WIRES 32, 33, 35 & 36
0	N/A	11-18-97	RTT	RTT	DS	RELEASED FOR PRODUCTION

DATE 07-18-97 | DWN JAS | CAD JAS | APPD DS | SCALE NTS

CUSTOMER

JOB TITLE 1287 6FT. BIO-SAFETY CABINET - 230V/50HZ

DWG TITLE ELECTRICAL SCHEMATIC

LOCATION HOODS | JOB NUMBER | DRAWING NUMBER 1287-70-0-D

Electrical Schematic
Forma Model:
1287
Bio-Safety Cabinet

1287-70-0-D Rev. 3
Page 3 of 3

POWER CONNECTION
100 VAC, 1PH, 2W, 50HZ, 9FLA (EXCLUDING RECEPTACLES)

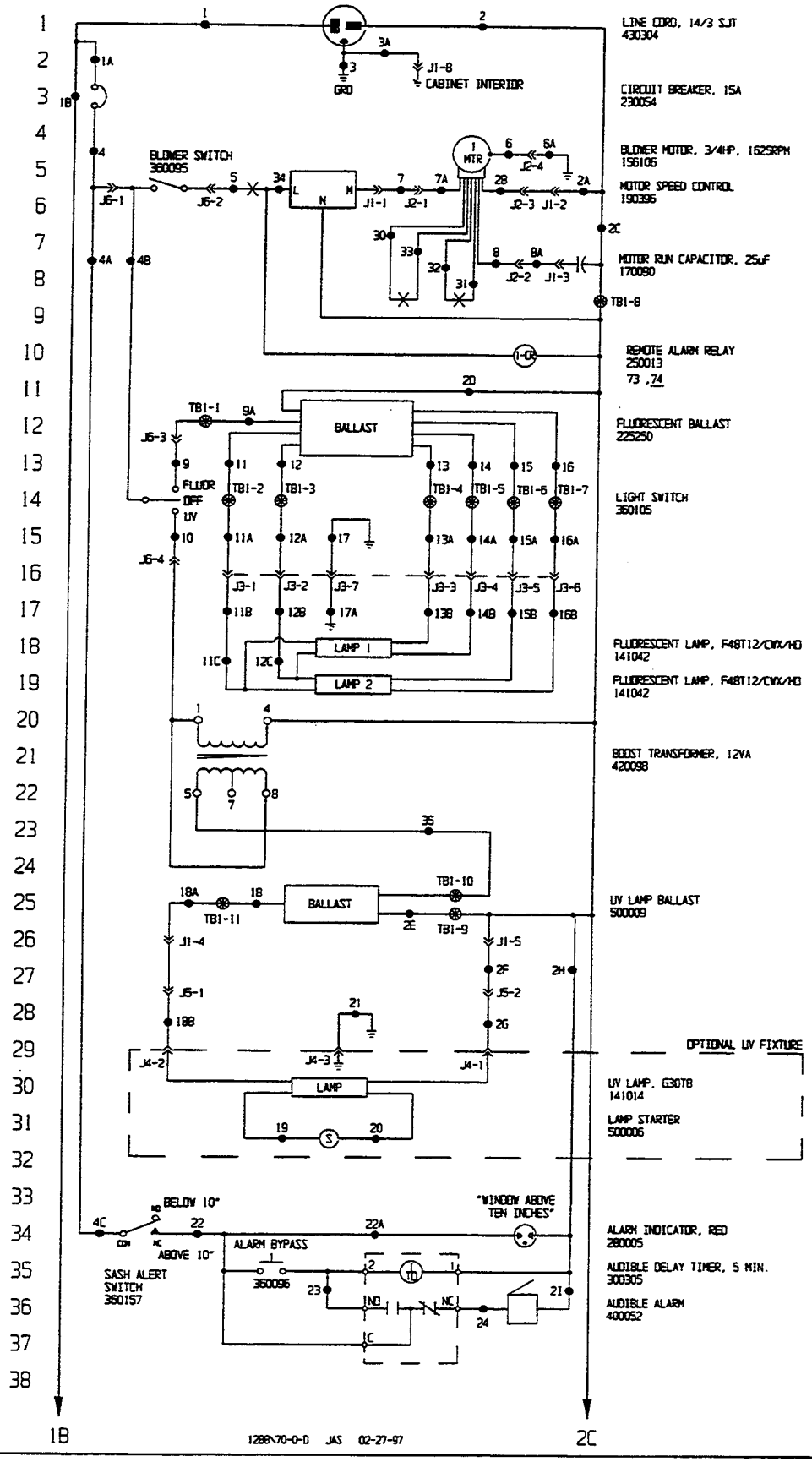

Electrical Schematic
Forma Model:
1288
Bio-Safety Cabinet

1288-70-0-D Rev. 4
Page 1 of 3

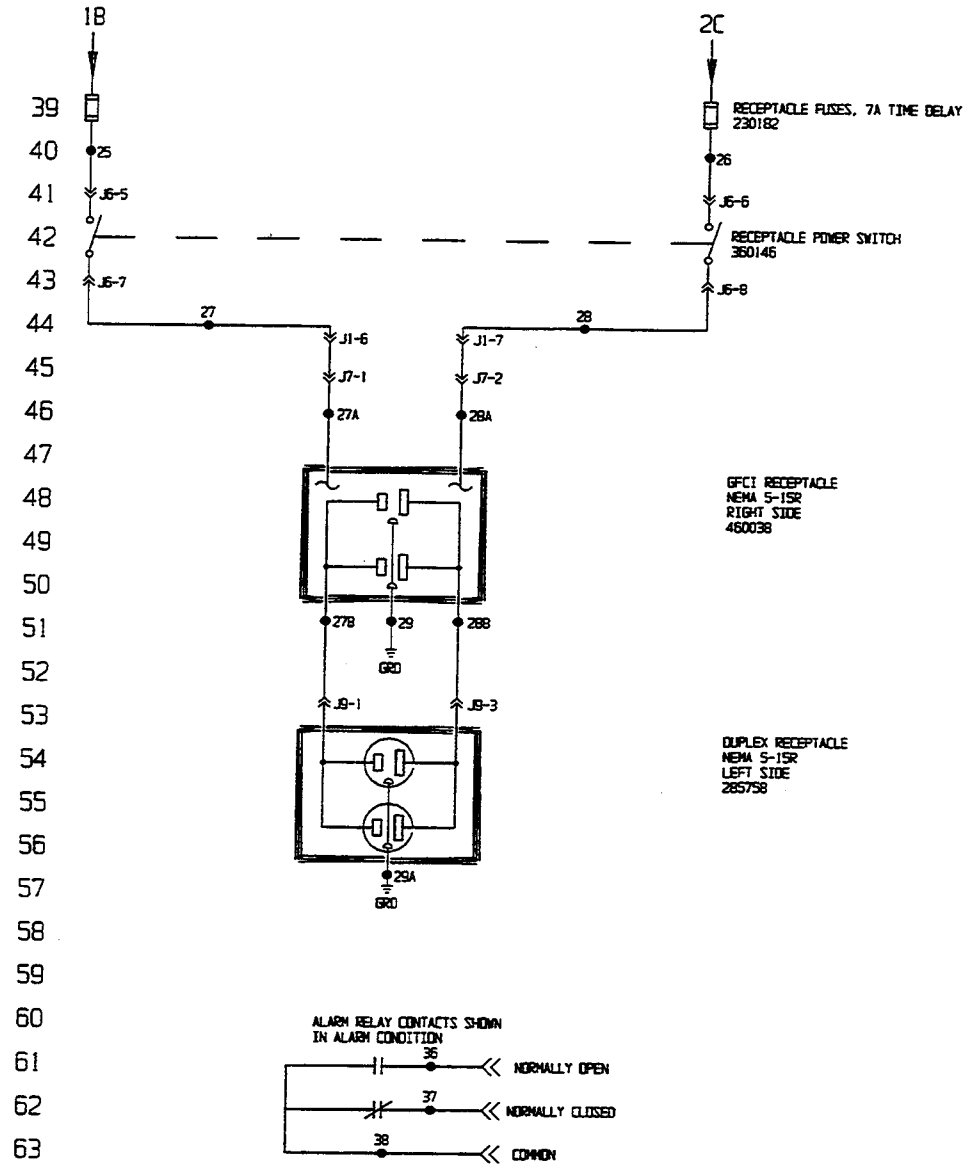

Electrical Schematic
Forma Model:
1288
Bio-Safety Cabinet

1288-70-0-D Rev. 4
Page 2 of 3

WIRE REFERENCE CHART

WIRE NO.	GAUGE	COLOR
1	14	BLACK
1A	14	BLACK
1B	16	BLACK
2	14	WHITE
2A	16	WHITE
2B	18	WHITE
2C	16	WHITE
2D	18	WHITE
2E	18	WHITE
2F	16	GRAY
2G	18	WHITE
2H	20	WHITE
2I	18	WHITE
3	14	GREEN/YELLOW
3A	16	GREEN/YELLOW
4	14	BROWN
4A	20	BROWN
4B	16	BROWN
4C	18	ORANGE
5	16	BLUE
6	18	GREEN
6A	16	GREEN
7	16	BLACK
7A	18	BLACK
8	18	BROWN
8A	16	BROWN
9	16	PURPLE
9A	18	BLACK
10	16	ORANGE
11	18	YELLOW
11A	20	YELLOW
11B	22	YELLOW
11C	18	YELLOW
12	18	YELLOW
12A	20	YELLOW
12B	22	ORANGE
12C	18	YELLOW
13	18	RED
13A	20	RED
13B	22	RED
14	18	RED
14A	20	RED
14B	22	BROWN
15	18	BLUE
15A	20	BLUE
15B	22	BLUE
16	18	BLUE
16A	20	BLUE
16B	22	BLACK
17	16	GREEN
17A	22	GREEN
18	18	BLUE
18A	16	BLUE
18B	18	BLACK
19	18	BLACK
20	18	BLACK
21	18	GREEN
22	18	RED
22A	20	RED
23	20	BLUE
24	18	BLACK
25	16	YELLOW
26	16	GRAY
27	16	ORANGE
27A	18	ORANGE
27B	18	BLACK
28	16	RED
28A	18	RED
28B	18	WHITE
29	18	GREEN
29A	18	GREEN
30	18	BROWN
31	18	ORANGE
32	18	PURPLE
33	18	YELLOW
34	16	RED
35	18	BLK
36	18	BRN
37	18	BLU
38	18	BLK

NOTES:

⊕	Denotes Terminal Strip Connection		Parts List Reference Number
1TD-1CR	Last Relay Number	○	Assembly
11	Last Terminal Number	⌂	Panel
38	Last Wire Number	○	Refrigeration

CONNECTOR	FUNCTION	LOCATION
J1 (15 POS.)	CABINET PASS-THRU CONN.	CONTROL PANEL (TOP REAR)
J2 (5 POS.)	BLOWER MOTOR	CAB. TOP HOUSING (INTERIOR)
J3 (9 POS.)	FLUORESCENT LIGHTING	CONTROL PANEL (INTERIOR)
J4 (4 POS.)	U/V LAMP RECEPTACLE	WORK CHAMBER (RIGHT SIDE)
J5 (2 POS.)	U/V RECEPTACLE CONN.	CAB. TOP HOUSING (INTERIOR)
J6 (5 POS.)	SWITCH PANEL CONNECTIONS	CONTROL PANEL (INTERIOR)
J7 (2 POS.)	RIGHT RECEPTACLE CORD	CAB. TOP HOUSING (INTERIOR)
J8 (5 POS.)	RIGHT SIDE RECEPTACLE	RIGHT RECEPTACLE BOX
J9 (3 POS.)	LEFT RECEPTACLE CORD	CAB. TOP HOUSING (INTERIOR)
TB1 (1 POS.)	BALLAST CONNECTIONS	CONTROL PANEL

CUSTOMER APPROVAL/REFERENCE

APPROVED BY _____

APPROVING FIRM _____

DATE OF APPROVAL _____

THIS DOCUMENT CONTAINS PROPRIETARY INFORMATION AND SUCH INFORMATION IS NOT TO BE DISCLOSED TO OTHERS FOR ANY PURPOSE NOR USED FOR MANUFACTURING PURPOSES WITHOUT WRITTEN PERMISSION FROM FORMA SCIENTIFIC

Forma Scientific

REV	ECR NO.	DATE	BY	CAD	APPD	DESCRIPTION OF REVISION
4	HD-1207	07-31-98	BOB	KDG	HEG	RIGHT GFIC RECEPT. TO STANDARD
3	SI-6557	07-07-98	DWL	KDG	LDN	CHANGED 360155 SWITCH TO 360146
2	HD-1179	04-14-98	RTT	PDK	LDN	CORRECT WIRES 31 & 33
1	HD-1159	01-20-98	RTT	RTT	DS	CHG FROM CSO TO CWX LAMPS
0	N/A	11-4-97	RTT	RTT	DS	RELEASED FOR PRODUCTION

DATE 02-27-97	DWN JAS	CAD JAS	APPD DS	SCALE NTS	
CUSTOMER					
JOB TITLE 1288 4FT. BIO-SAFETY CABINET - 100V/50HZ					
DWG TITLE ELECTRICAL SCHEMATIC					
LOCATION HOODS	JOB NUMBER	DRAWING NUMBER 1288-70-0-D			

Electrical Schematic
Forma Model:
1288
Bio-Safety Cabinet

1288-70-0-D Rev. 4

POWER CONNECTION
100 VAC, 1PH, 2W, 50HZ, 11.5FLA (EXCLUDING RECEPTACLES)

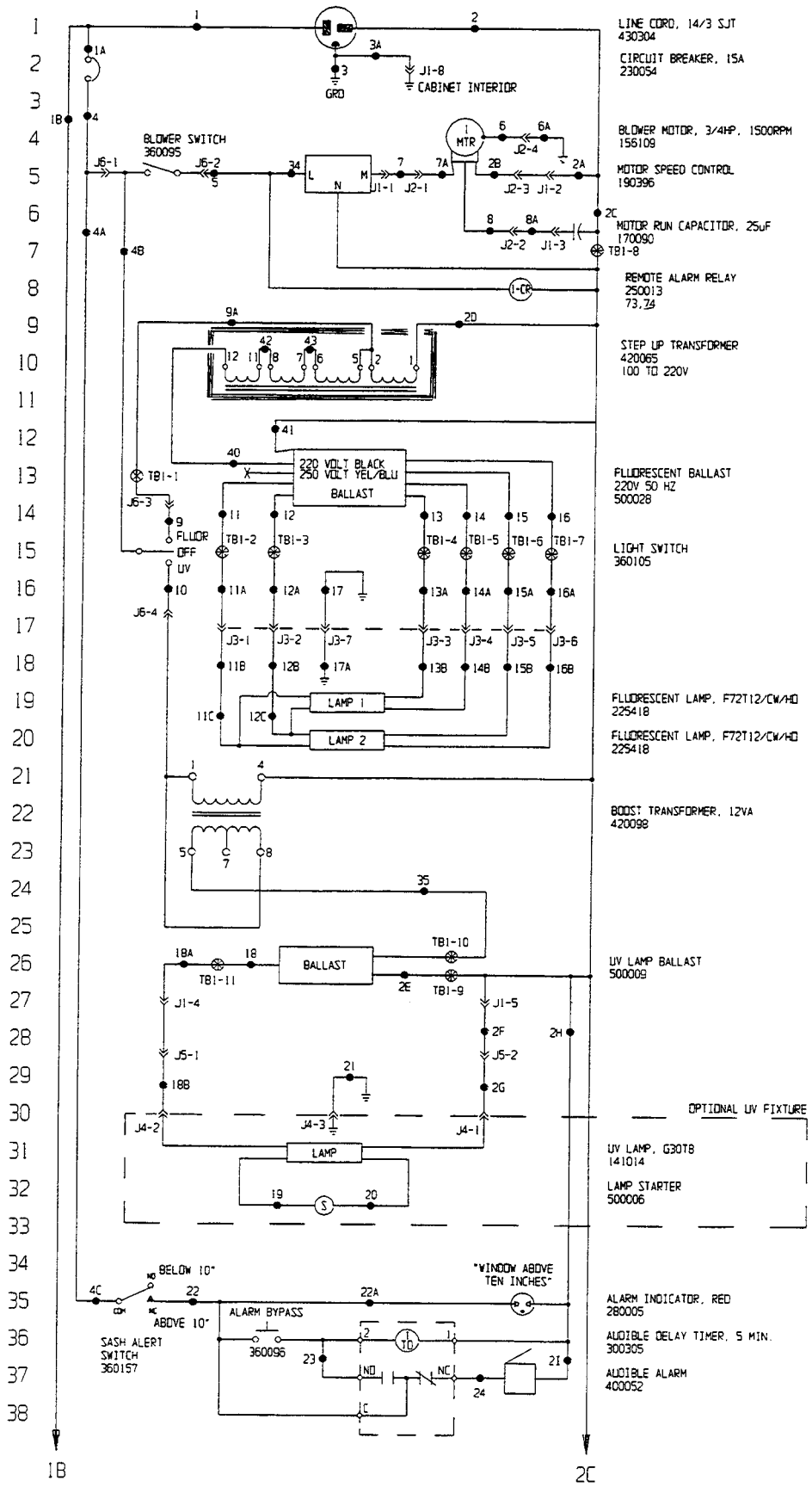

Electrical Schematic
Forma Model:
1290
Bio-Safety Cabinet

1290-70-0-D Rev. 5
Page 1 of 3

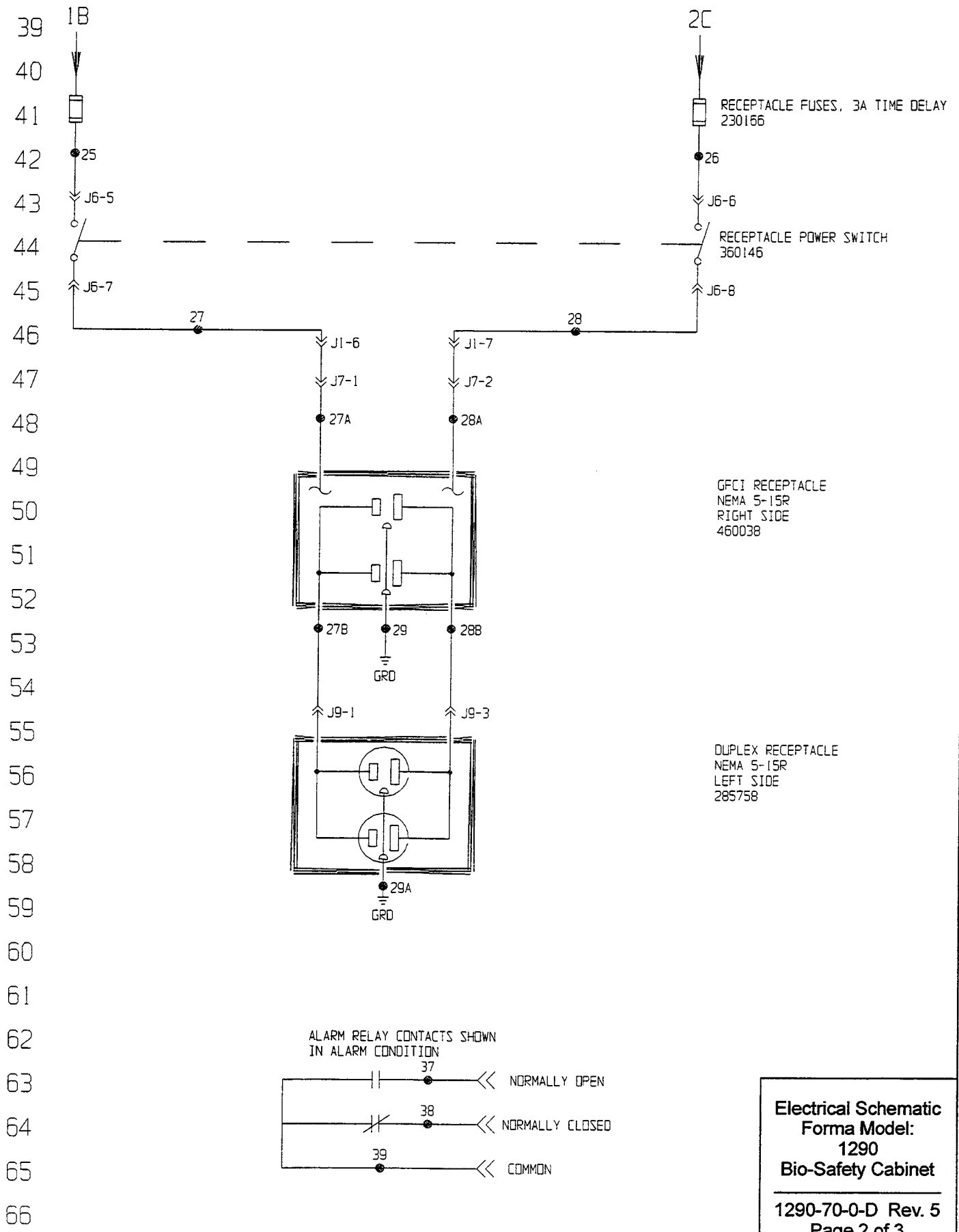

Electrical Schematic
Forma Model:
1290
Bio-Safety Cabinet

1290-70-0-D Rev. 5
Page 2 of 3

WIRE REFERENCE CHART

WIRE NO.	GAUGE	COLOR
1	14	BLACK
1A	14	BLACK
1B	16	BLACK
2	14	WHITE
2A	16	WHITE
2B	18	WHITE
2C	16	WHITE
2D	18	WHITE
2E	18	WHITE
2F	16	GRAY
2G	18	WHITE
2H	20	WHITE
2I	18	WHITE
3	14	GREEN/YELLOW
3A	16	GREEN/YELLOW
4	14	BROWN
4A	20	BROWN
4B	16	BROWN
4C	18	ORANGE
5	16	BLUE
6	18	GREEN
6A	16	GREEN
7	16	BLACK
7A	18	BLACK
8	18	BROWN
8A	16	BROWN
9	16	PURPLE
9A	18	PURPLE
10	16	ORANGE
11	18	YELLOW
11A	20	YELLOW
11B	22	YELLOW
11C	18	YELLOW
12	18	YELLOW
12A	20	YELLOW
12B	22	ORANGE
12C	18	YELLOW
13	18	RED
13A	20	RED
13B	22	RED
14	18	RED
14A	20	RED
14B	22	BROWN
15	18	BLUE
15A	20	BLUE
15B	22	BLUE
16	18	BLUE
16A	20	BLUE
16B	22	BLACK
17	16	GREEN
17A	22	GREEN
18	18	BLUE
18A	16	BLUE
18B	18	BLACK
19	18	BLACK
20	18	BLACK
21	18	GREEN
22	18	RED
22A	20	RED
23	20	BLUE
24	18	BLACK
25	16	YELLOW
26	16	GRAY
27	16	ORANGE
27A	18	ORANGE
27B	18	BLACK
28	16	RED
28A	18	RED
28B	18	WHITE
29	18	GREEN
29A	18	GREEN
30	N/A	N/A
31	N/A	N/A
32	N/A	N/A
33	N/A	N/A
34	16	RED
35	18	BLK
36	N/A	N/A
37	18	BRN
38	18	BLU
39	18	BLK
40	18	BLK
41	18	WHT
42	18	RED
43	18	ORG

NOTES:

⊗	Denotes Terminal Strip Connection	Parts List Reference Number	
1TD	Lost Relay Number	○	Assembly
11	Lost Terminal Number	⬠	Panel
43	Lost Wire Number	⬡	Refrigeration

CONNECTOR	FUNCTION	LOCATION
J1 (15 POS.)	CABINET PASS-THRU CONN.	CONTROL PANEL (TOP REAR)
J2 (5 POS.)	BLOWER MOTOR	CAB. TOP HOUSING (INTERIOR)
J3 (9 POS.)	FLUORESCENT LIGHTING	CONTROL PANEL (INTERIOR)
J4 (4 POS.)	U/V LAMP RECEPTACLE	WORK CHAMBER (RIGHT SIDE)
J5 (2 POS.)	U/V RECEPTACLE CONN.	CAB. TOP HOUSING (INTERIOR)
J6 (5 POS.)	SWITCH PANEL CONNECTIONS	CONTROL PANEL (INTERIOR)
J7 (2 POS.)	RIGHT RECEPTACLE CORD	CAB. TOP HOUSING (INTERIOR)
J8 (3 POS.)	LEFT RECEPTACLE CORD	CAB. TOP HOUSING (INTERIOR)
TB1 (11 POS.)	BALLAST CONNECTIONS	CONTROL PANEL

CUSTOMER APPROVAL/REFERENCE

APPROVED BY _____

APPROVING FIRM _____

DATE OF APPROVAL _____

THIS DOCUMENT CONTAINS PROPRIETARY INFORMATION AND SUCH INFORMATION IS NOT TO BE DISCLOSED TO OTHERS FOR ANY PURPOSE NOR USED FOR MANUFACTURING PURPOSES WITHOUT WRITTEN PERMISSION FROM FORMA SCIENTIFIC

Forma Scientific

BOX 649 MARIETTA, OHIO 45750
TOLL FREE USA 800-848-3080, OHIO 740-373-4763

REV	ECR NO.	DATE	BY	CAD	APPD	DESCRIPTION OF REVISION
5	HO-1263	07-19-99	RTT	RTT	LDN	ADD 220V 50HZ BALLAST
4	HO-1207	07-31-98	BOB	KDG	LDN	RIGHT GFIC RECEPT. TO STANDARD
3	S1-6557	07-07-98	DWL	KDG	LDN	CHANGED 360155 SWITCH TO 360146
2	HO-1179	04-14-98	RTT	PDK	LDN	REMOVED WIRES 30, 31, 32 & 33
1	HO-1161	1-27-98	RTT	RTT	DS	REMOVE MOTOR BOOST XFMR

DATE 02-27-97	DWN JAS	CAD JAS	APPD DHS	SCALE NTS	
CUSTOMER					
JOB TITLE 1290 6FT. BIO-SAFETY CABINET - 100V/50HZ					
DWG TITLE ELECTRICAL SCHEMATIC					
LOCATION HOODS	JOB NUMBER	DRAWING NUMBER 1290-70-0-D			

Electrical Schematic
Forma Model:
1290
Bio-Safety Cabinet

1290-70-0-D Rev. 5
Page 3 of 3

POWER CONNECTION
100 VAC, 1PH, 2W, 60HZ, 14FLA (EXCLUDING RECEPTACLES)

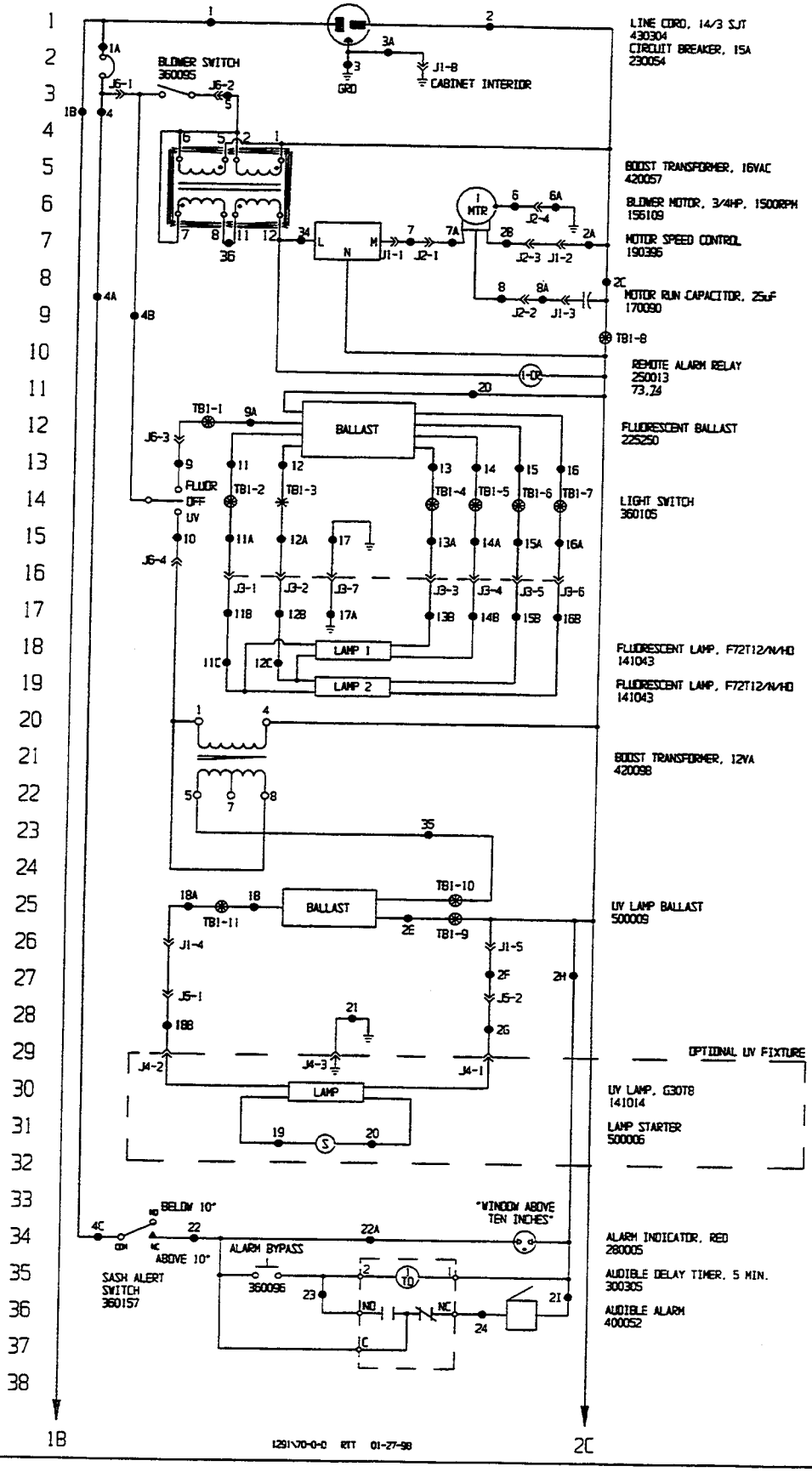

Electrical Schematic
Forma Model:
1291
Bio-Safety Cabinet

1291-70-0-D Rev. 3
Page 1 of 3

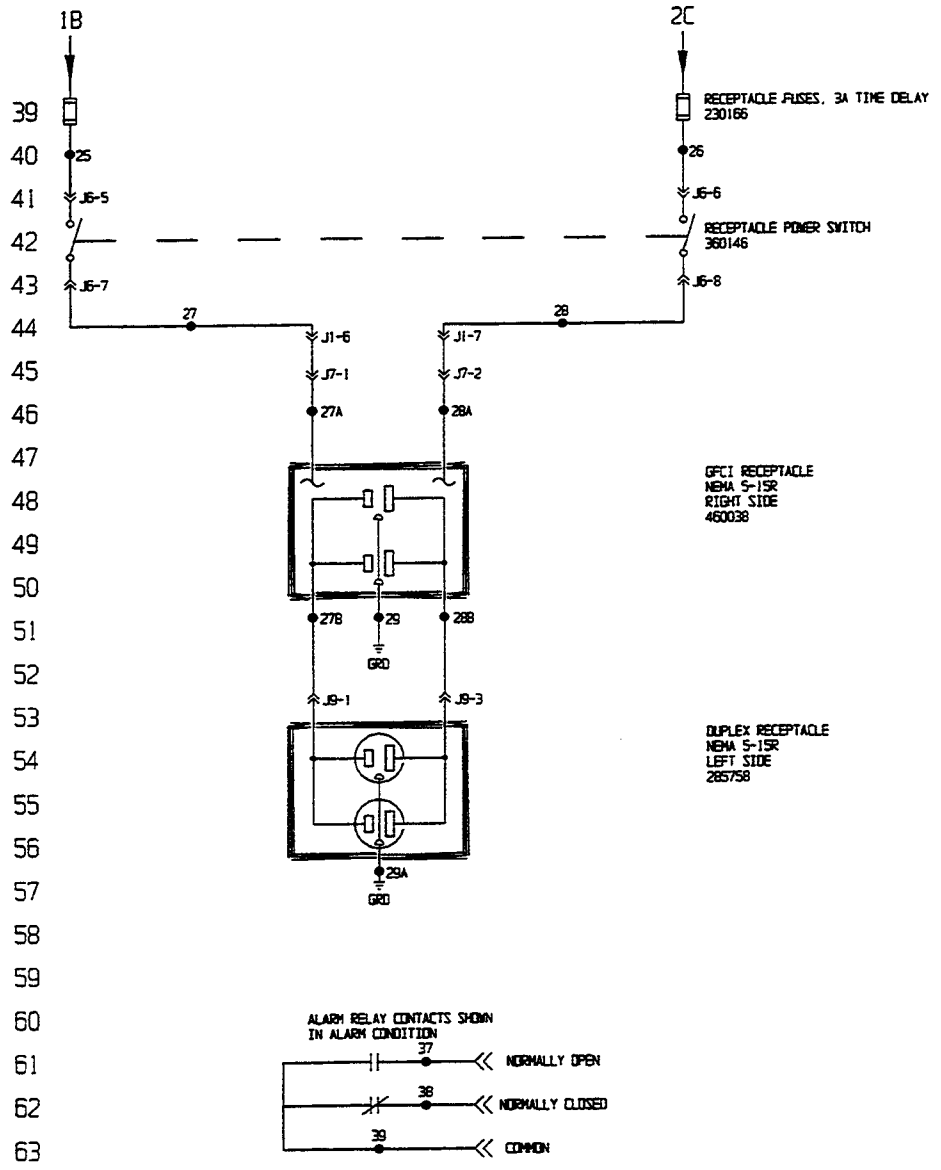

Electrical Schematic
Forma Model:
1291
Bio-Safety Cabinet

1291-70-0-D Rev. 3
Page 2 of 3

WIRE REFERENCE CHART

WIRE NO.	GAUGE	COLOR
1	14	BLACK
1A	14	BLACK
1B	16	BLACK
2	14	WHITE
2A	16	WHITE
2B	18	WHITE
2C	16	WHITE
2D	18	WHITE
2E	18	WHITE
2F	16	GRAY
2G	18	WHITE
2H	20	WHITE
2I	18	WHITE
3	14	GREEN/YELLOW
3A	16	GREEN/YELLOW
4	14	BROWN
4A	20	BROWN
4B	16	BROWN
4C	18	ORANGE
5	16	BLUE
6	18	GREEN
6A	16	GREEN
7	16	BLACK
7A	18	BLACK
8	18	BROWN
8A	16	BROWN
9	16	PURPLE
9A	18	BLACK
10	16	ORANGE
11	18	YELLOW
11A	20	YELLOW
11B	22	YELLOW
11C	18	YELLOW
12	18	YELLOW
12A	20	YELLOW
12B	22	ORANGE
12C	18	YELLOW
13	18	RED
13A	20	RED
13B	22	RED
14	18	RED
14A	20	RED
14B	22	BROWN
15	18	BLUE
15A	20	BLUE
15B	22	BLUE
16	18	BLUE
16A	20	BLUE
16B	22	BLACK
17	16	GREEN
17A	22	GREEN
18	18	BLUE
18A	16	BLUE
18B	18	BLACK
19	18	BLACK
20	18	BLACK
21	18	GREEN
22	18	RED
22A	20	RED
23	20	BLUE
24	18	BLACK
25	16	YELLOW
26	16	GRAY
27	16	ORANGE
27A	18	ORANGE
27B	18	BLACK
28	16	RED
28A	18	RED
28B	18	WHITE
29	18	GREEN
29A	18	GREEN
30	N/A	N/A
31	N/A	N/A
32	N/A	N/A
33	N/A	N/A
34	16	RED
35	18	BLK
36	16	ORG
37	18	BRN
38	18	BLU
39	18	BLK

NOTES:

⊕	Denotes Terminal Strip Connection		Parts List Reference Number
1TD	Last Relay Number	⬡	Assembly
11	Last Terminal Number	⬠	Panel
39	Last Wire Number	⬡	Refrigeration

CONNECTOR	FUNCTION	LOCATION
J1 (15 POS.)	CABINET PASS-THRU CONN.	CONTROL PANEL (TOP REAR)
J2 (5 POS.)	BLOWER MOTOR	CAB. TOP HOUSING (INTERIOR)
J3 (9 POS.)	FLUORESCENT LIGHTING	CONTROL PANEL (INTERIOR)
J4 (4 POS.)	U/V LAMP RECEPTACLE	WORK CHAMBER (RIGHT SIDE)
J5 (2 POS.)	U/V RECEPTACLE CONN.	CAB. TOP HOUSING (INTERIOR)
J6 (5 POS.)	SWITCH PANEL CONNECTIONS	CONTROL PANEL (INTERIOR)
J7 (2 POS.)	RIGHT RECEPTACLE CORD	CAB. TOP HOUSING (INTERIOR)
J8 (5 POS.)	RIGHT SIDE RECEPTACLE	RIGHT RECEPTACLE BOX
J9 (3 POS.)	LEFT RECEPTACLE CORD	CAB. TOP HOUSING (INTERIOR)
TB1 (11 POS.)	BALLAST CONNECTIONS	CONTROL PANEL

CUSTOMER APPROVAL/REFERENCE

APPROVED BY _____

APPROVING FIRM _____

DATE OF APPROVAL _____

THIS DOCUMENT CONTAINS PROPRIETARY INFORMATION AND SUCH INFORMATION IS NOT TO BE DISCLOSED TO OTHERS FOR ANY PURPOSE NOR USED FOR MANUFACTURING PURPOSES WITHOUT WRITTEN PERMISSION FROM FORMA SCIENTIFIC

Forma Scientific

REV	ECR NO.	DATE	BY	CAD	APPD	DESCRIPTION OF REVISION
3	HD-1207	07-31-98	BOB	KOG	HEG	RIGHT GFIC RECEPT. TO STANDARD
2	SI-6557	07-07-98	DWL	KOG	LON	CHANGED 360155 SWITCH TO 360146
1	HD-1179	04-14-98	RTT	PDK	LON	REMOVED WIRES 30, 31, 32 & 33
0	HD-1161	1-27-98	RTT	RTT	DS	RELEASED FOR PRODUCTION

DATE 1-26-98	DWN RTT	CAD RTT	APPD DS	SCALE NTS		
CUSTOMER						
JOB TITLE 1291 6FT. BIO-SAFETY CABINET - 100V/60HZ						
DWG TITLE ELECTRICAL SCHEMATIC						
LOCATION HOODS	JOB NUMBER	DRAWING NUMBER 1291-70-0-D				

Electrical Schematic
Forma Model:
1291
Bio-Safety Cabinet

1291-70-0-D Rev. 3

Thermo Forma

Millcreek Road, P.O. Box 649
Marietta, Ohio 45750
U.S.A.

Telephone (740) 373-4763
Telefax (740) 373-4189