thermoscientific

Vanquish

Charged Aerosol Detectors

VH-D20, VF-D20

Operating Manual

4820.8401-EN Revision 2.1 • October 2019

ThermoFisher SCIENTIFIC

Copyright © 2019 Thermo Fisher Scientific Inc. All rights reserved.

Trademarks

PEEK is a trademark of Victrex PLC. MP35N is a registered trademark of SPS Technologies. Torx is a registered trademark of TEXTRON INDUSTRIES, INC. Acrobat, Adobe, and Adobe Reader are trademarks or registered trademarks of Adobe Systems Incorporated in the United States and other countries. Microsoft, Windows, and Windows Vista are registered trademarks of Microsoft Corp. Nitronic is a registered trademark of AK Steel Corporation. SimRiz is a registered trademark of Carl Freudenberg KG.

All other trademarks are property of Thermo Fisher Scientific Inc. and its subsidiaries.

Thermo Fisher Scientific Inc. provides this document to its customers with a product purchase to use in the product operation. The document is copyright protected; any reproduction of the whole or any part of this document is strictly prohibited, except with the written authorization of Thermo Fisher Scientific Inc.

This manual is provided "as is." The contents of this manual are subject to being changed, without notice, in future revisions.

Thermo Fisher Scientific Inc. makes no representations that this document is complete, accurate, or error-free. Thermo Fisher Scientific Inc. assumes no responsibility and will not be liable for any errors, omissions, damage, or loss that might result from any use of this document, even if the information in the document is followed properly.

This document is not part of any sales contract between Thermo Fisher Scientific Inc. and a purchaser. This document shall in no way govern or modify any Terms and Conditions of Sale. The Terms and Conditions of Sale shall govern all conflicting information between the two documents.

Release history

Revision 1.1, released in March 2015, original operating manual
Revision 2.0, released in July 2015, original operating manual
Revision 2.0a released in September 2017, original operating manual
Revision 2.1 released in October 2019, original operating manual

The hardware descriptions in this manual revision refer to the detectors VH-D20 and VF-D20.

Printed manual version only

Printed in Germany on 100% chlorine-free bleached, high-white paper that is produced in an environmentally friendly process, leading to a paper profile of zero CO2 emissions.

Contacting Us

There are several ways to contact us:

Ordering Information

For ordering information or sales support for HPLC products, contact your local Thermo Fisher Scientific sales organization. For contact information, go to Contact Us on http://www.thermoscientific.com.

Technical Assistance

For technical support for HPLC products, contact your local Thermo Fisher Scientific support organization. For contact information, go to Contact Us on http://www.thermoscientific.com.

Contents

1 Using this Manual 9

1.1 About this Manual 10

1.2 Conventions 11

1.2.1 Safety Messages 11

1.2.2 Special Notices and Informational Notes 11

1.2.3 Typographical Conventions 12

1.3 Reference Documentation 13

2 Safety 15

2.1 Safety Symbols and Signal Words 16

2.1.1 Safety Symbols and Signal Words in This Manual 16

2.1.2 Observing this Manual 17

2.1.3 Safety Symbols on the Detector 17

2.1.4 Rating Plate 17

2.2 Intended Use 18

2.3 Safety Precautions 19

2.3.1 General Safety Information 19

2.3.2 Qualification of the Personnel 20

2.3.3 Personal Protective Equipment 20

2.3.4 Electrical Safety Precautions 21

2.3.5 General Residual Hazards 22

2.3.6 In Case of Emergency 24

2.4 Solvent and Additive Information 25

2.5 Compliance Information 27

3 Detector Overview 29

3.1 Detector Features 30

3.2 Operating Principle 31

3.3 Interior Components 33

3.4 Nebulizer 34

3.5 Gas Filter Assembly 35

3.6 Excess Liquid and Leak Detection 36

3.7 Operation 37

4 Unpacking and Transport 39

4.1 Unpacking and Moving 40

4.2 Scope of Delivery 43

5 Installation 45

5.1 Safety Guidelines for Installation 46

5.2 Installing the Detector 47

5.3 Site Requirements 49

5.4 Accessing the Interior Components 55

5.5 Setting Up the Hardware 56

5.5.1 System Arrangement 56

5.5.2 Connecting the Detector 58

5.5.3 Installing the Nebulizer 62

5.5.4 Connecting the Gas Inlet and Exhaust Tubes 67

5.6 Setting Up the Liquid Flow Connections 70

5.6.1 General Information and Guidelines 70

5.6.2 Guiding Capillaries and Tubing Through the System 71

5.6.3 Connecting Fittings, Capillaries, and Tubing 73

5.6.4 Connecting the Waste Line 75

5.6.5 Connecting the Inlet Capillary to the Nebulizer 76

5.6.6 Guiding Liquid Leaks to Waste 80

5.7 Turning On the Detector 81

5.8 Setting Up the Detector in the Software 82

6 Operation 83

6.1 Introduction to this Chapter 84

6.2 Safety Guidelines for Operation 85

6.3 Control Elements 87

6.3.1 Keypad 87

6.3.2 Status Indicators 89

6.4 Power On/Off Control 91

6.5 Preparing the Detector for Operation 92

6.5.1 Mobile Phase Guidelines for the Detector 95

6.5.2 Verifying the Nebulizer Gas Pressure 98

6.5.3 Turning On the Detector Gas Flow 99

6.6 Important Operating Parameters 100
6.7 Optimizing the Performance of the Detector 103
6.7.1 General Guidelines 103
6.7.2 Overview of Optimization Parameters 104
6.7.3 Data Collection Rate and Filter Constant 104
6.7.4 Signal Channels 106
6.7.5 Evaporation Temperature 107
6.7.6 Gas Regulation Mode (VH-Detector only) 109
6.7.7 Power Function Value 109
6.7.8 Baseline Noise 110
6.8 Shutting Down the Detector 111
6.8.1 Short-Term Shutdown (Interruption of Operation) 111
6.8.2 Long-Term Shutdown 112

7 Maintenance and Service 115
7.1 Introduction to Maintenance and Service 116
7.2 Safety Guidelines for Maintenance and Service 117
7.3 General Rules for Maintenance and Service 119
7.4 Routine and Preventive Maintenance 120
7.4.1 Maintenance Plan 120
7.4.2 Flushing the Detector Between Analyses 121
7.4.3 Cleaning or Decontaminating the Detector 121
7.4.4 Predictive Performance 123
7.5 Disconnecting the Gas Inlet and Exhaust Tubes 125
7.6 Disconnecting the Waste Line 127
7.7 Removing the Nebulizer 128
7.8 Replacing the Gas Filter Assembly 131
7.9 Replacing the Main Power Fuses 136
7.10 Updating the Detector Firmware 138
7.11 Replacing the Doors 140
7.12 Transporting or Shipping the Detector 142
7.13 Slide-In Module 145
7.13.1 Removing the Slide-In Module 145
7.13.2 Installing the Slide-In Module 148

8 Troubleshooting 151
8.1 General Information about Troubleshooting 152
8.2 Messages 155
8.3 Operating Problems 158
8.3.1 Resolving Leakage 158
8.3.2 Resolving Gas Supply Overpressure 159
8.3.3 Resolving Flooding In the Detector 160
8.3.4 Additional Detector Operating Problems 161
9 Specifications 163
9.1 Performance Specifications 164
9.2 Physical Specifications 166
10 Accessories, Consumables and Replacement Parts 167
10.1 General Information 168
10.2 Ship Kit 169
10.3 Optional Accessories 170
10.4 Consumables and Replacement Parts 171
11 Compliance Information 173
11.1 Declarations of Conformity 174
11.2 WEEE Compliance 175
11.3 FCC Compliance 176
12 Index 177

1 Using this Manual

This chapter provides information about this manual, the conventions used throughout the manual, and the reference documentation that is available in addition to this manual.

1.1 About this Manual

This manual describes the functional features and operating principle of your Vanquish™ detector and provides instructions for installation, set up, start up, shut down, operation, maintenance and troubleshooting.

The layout of this manual is designed to provide quick reference to the sections of interest to the user. To obtain a full understanding of your detector, read this manual thoroughly.

This manual also contains safety messages, precautionary statements, and special notices that can prevent personal injury, damage to the detector, or loss of data when followed properly.

Note the following:

- The detector configuration may vary; therefore, not all descriptions necessarily apply to your particular detector.
- If some detail applies to only one model or variant, the model or variant is identified by name.
- Illustrations in this manual are provided for basic understanding. They can vary from the actual model of the detector or component. However, this does not influence the descriptions. No claims can be derived from the illustrations in this manual.
- The detector is referred to as *detector* or *charged aerosol detector* in this manual. If other detector types are referenced, they are identified by name.

The descriptions in this manual assume that the detector is installed in the Vanquish system stack. If this is not the case, additional hardware is required and must be ordered separately. The information in this manual applies correspondingly.

1.2 Conventions

This section describes the conventions that are used throughout this manual.

1.2.1 Safety Messages

The safety messages and precautionary statements in this manual appear as follows:

- Safety messages or precautionary statements that apply to the entire manual and all procedures in this manual are grouped in the Safety chapter.
- Safety messages or precautionary statements that apply to an entire section or to multiple procedures in a section appear at the beginning of the section to which they apply.
- Safety messages that apply to only a particular section or procedure appear in the section or procedure to which they apply. They appear different from the main flow of text.

Safety messages are often preceded by an alert symbol and/or alert word. The alert word appears in uppercase letters and in bold type.

Make sure that you understand and follow all safety messages presented in this manual.

1.2.2 Special Notices and Informational Notes

Special notices and informational notes in this manual appear different from the main flow of text. They appear in boxes and a note label identifies them. The label text appears in uppercase letters and in bold type.

NOTICE Highlights information necessary to prevent damage to the detector or invalid test results.

TIP Highlights information of general interest or helpful information that can make a task easier or optimize the performance of the detector.

1.2.3 Typographical Conventions

These typographical conventions apply to the descriptions in this manual:

Data Input and Output

- The following appears in **bold** type:
  - Input that you enter by the keyboard or that you select with the mouse
  - Buttons that you click on the screen
  - Commands that you enter by the keyboard
  - Names of, for example, dialog boxes, properties, and parameters
- For brevity, long expressions and paths appear in the condensed form, for example: Click **Start > All Programs > Thermo Chromeleon 7 > Services Manager > Start Instrument Controller**.

References and Messages

- References to additional documentation appear *italicized*.
- Messages that appear on the screen are identified by quotation marks.

Viewpoint

If not otherwise stated, the expressions *left* and *right* in this manual always refer to the viewpoint of a person that is facing the detector from the front.

Particularly Important Words

Particularly important words in the main flow of text appear *italicized*.

Electronic Manual Version (PDF)

The electronic version (PDF) of the manual contains numerous links that you can click to go to other locations within the manual. These include:

- Table of contents entries
- Index entries
- Cross-references (in blue text), for example, to sections and figures

1.3 Reference Documentation

In addition to this operating manual, other documentation is available for reference.

Hardware Documentation

Additional hardware documentation includes the following:

- *Operating manuals* for the other modules of the Vanquish system
  A printed version of the manual is shipped with the device.
- *Vanquish System Operating Manual*
  A printed version of the manual is shipped with the Vanquish system base and solvent rack.
- *Instrument Installation Qualification Operating Instructions*

TIP Electronic versions of these manuals are available as PDF (Portable Document Format) files. To open and read the PDF files, Adobe® Reader® or Adobe® Acrobat® is required.

Software Documentation

Additional software documentation includes the following:

- *Chromeleon™ 7 Help and documents*
  The *Chromeleon 7 Help* provides extensive information and comprehensive reference material for all aspects of the software. For basic information about device installation and configuration, refer to the *Installation Guide*; for specific information about a certain device, refer to the *Instrument Configuration Manager Help.* In Chromeleon 7, devices are called modules.

  For information about the main elements of the user interface and step-by-step guidance through the most important workflows, refer to the *Quick Start Guide*.

  For a concise overview of the most important workflows, refer to the *Reference Card*.

- *Chromeleon™ 6.8 Help*
  The *Chromeleon 6.8 Help* provides extensive information for all aspects of the software, including device installation and configuration.

TIP The *Chromeleon* Help and documents are included in the software shipment.

Third-Party Documentation

Refer also to the user documentation provided by the manufacturers of third-party components and materials, for example, Safety Data Sheets (SDSs).

Third-party documentation includes the user documentation for the gas supply, as applicable:

- User documentation for the nitrogen generator
- User documentation for the air compressor

2 Safety

This chapter provides general and specific safety information and informs about the intended use of the detector.

2.1 Safety Symbols and Signal Words

2.1.1 Safety Symbols and Signal Words in This Manual

This manual contains safety messages to prevent injury of the persons using the detector. The safety symbols and signal words in this manual include the following:

Always be aware of the safety information. Do not proceed until you have fully understood the information and consider the consequences of what you are doing.

CAUTION Indicates a hazardous situation that, if not avoided, could result in minor or moderate injury.

WARNING Indicates a hazardous situation that, if not avoided, could result in serious injury.

2.1.2 Observing this Manual

Observe the following:

- Before installing or operating the detector, read this manual carefully to be familiar with the detector and this manual. The manual contains important information with regard to user safety as well as use and care of the detector.
- Always keep the manual near the detector for quick reference.
- Save this manual and pass it on to any subsequent user.

Read, understand, and comply with all safety messages and precautionary statements presented in this manual.

2.1.3 Safety Symbols on the Detector

The table lists the safety symbols that appear on the detector or on labels affixed to the detector. Follow the safety notices in this manual to prevent the risk of operator injury or damage to the detector.

Symbol	Description
⚠	Indicates a potential hazard. Refer to this manual to avoid the risk of personal injury and/or to prevent damage to the device.
— O	Power supply is on Power supply is off
~	Indicates alternating current.

2.1.4 Rating Plate

The rating plate is present on the detector near the electrical connections. The rating plate indicates the serial number, part number, module name, line and fuse rating, and the manufacturer's address.

TIP An additional type label on the leak tray of the detector indicates the serial number, part number, and module name. To facilitate device identification have the information from this label available when communicating with Thermo Fisher Scientific.

2.2 Intended Use

The detector is intended to be part of the Vanquish system. The intended use of the Vanquish system is to analyze a mixture of compounds in sample solutions. The detector is for use by qualified personnel and in laboratory environment only.

The detector and Vanquish system are intended for laboratory research use only. They are not intended for use in diagnostic procedures.

Laboratory Practice

Thermo Fisher Scientific recommends that the laboratory in which the Vanquish system is used follow best practices for LC analyses. This includes among others:

- Using appropriate standards
- Regularly running calibration prior to reporting results
- Establishing shelf life limits and following them for all consumables used with the system
- Running the system according to the laboratory's verified and validated 'lab developed test' protocol

2.3 Safety Precautions

2.3.1 General Safety Information

All users must observe the general safety information presented in this section and all specific safety messages and precautionary statements elsewhere in this manual during all phases of installation, operation, troubleshooting, maintenance, shutdown, and transport of the detector.

If the detector is used in a manner not specified by Thermo Fisher Scientific, the protection provided by the detector could be impaired. Observe the following:

- Operate the detector only within its technical specifications.
- Use only the replacement parts and additional components, options, and peripherals specifically authorized and qualified for the detector by Thermo Fisher Scientific.
- Perform only the procedures that are described in this operating manual and in supporting documents for the detector.
  Follow all instructions step by step and use the tools recommended for the procedure.
- Open the enclosure of the detector and other components only if specifically instructed to do so in this manual.
- Thermo Fisher Scientific cannot be held liable for any damage, material or otherwise, resulting from inappropriate or improper use of the detector. If there is any question regarding appropriate usage, contact Thermo Fisher Scientific before proceeding.

Safety Standard

This device is a Safety Class I instrument (provided with terminal for protective grounding). The device has been manufactured and tested according to international safety standards.

2.3.2 Qualification of the Personnel

Observe the information below on the proper qualification of the personnel installing and/or operating the detector.

Installation

Only skilled personnel are permitted to install the detector and to establish the electrical connections according to the appropriate regulations. Thermo Fisher Scientific recommends always having service personnel certified by Thermo Fisher Scientific perform the installation (for brevity, referred to as Thermo Fisher Scientific service engineer).

If a person other than a Thermo Fisher Scientific service engineer installs and sets up the module, the installer is responsible for ensuring the safety of the module and system.

General Operation

The detector is designed to be operated only by trained and qualified personnel in a laboratory environment.

All users must know the hazards presented by the detector and the substances they are using. All users should observe the related Safety Data Sheets (SDSs).

2.3.3 Personal Protective Equipment

Wear personal protective equipment and follow good laboratory practice to protect you from hazardous substances. The appropriate equipment depends on the hazard. For advice on the hazards and the equipment required for the substances you are using, refer to the material handling and safety data sheet provided by the vendor.

An eyewash facility and a sink should be available nearby. If any substance contacts your skin or eyes, wash the affected area and seek medical attention.

Protective Clothing

To protect you from chemical splashes, harmful liquids, or other contamination, put on appropriate protective clothing, such as a lab coat.

Protective Eyewear

To prevent liquids from striking your eyes, put on appropriate protective eyewear, such as safety glasses with side shields. If there is a risk of splashing liquids, put on goggles.

Gloves

To protect you from harmful liquids and avoid personal injury during maintenance or service, put on appropriate protective gloves.

2.3.4 Electrical Safety Precautions

WARNING— Electric Shock or Damage to the Device

High voltages are present inside the device that could cause an electric shock or damage to the device.

- Do not make any changes to the electrical or grounding connections.
- If you suspect any kind of electrical damage, disconnect the power cord and contact Thermo Fisher Scientific Technical Support for assistance.
- Do not open the housing or remove protective panels unless specifically instructed to do so in this manual.
- Do not place liquid reservoirs directly upon the device. Liquid might leak into the device and get into contact with electronic components causing a short circuit. Instead, place liquid reservoirs in the solvent rack that is available for the Vanquish system.

2.3.5 General Residual Hazards

Pay attention to the following general residual hazards when working with the detector:

WARNING—Hazardous Substances

Solvents, mobile phases, samples, and reagents might contain toxic, carcinogenic, mutagenic, infectious, or otherwise harmful substances. The handling of these substances can pose health and safety risks.

- Be sure that you know the properties of all substances that you are using. Avoid exposure to harmful substances. If you have any doubt about a substance, handle the substance as if it is potentially harmful.
- Wear personal protective equipment as required by the hazard and follow good laboratory practice.
- Reduce the volume of substances to the minimum volume required for sample analysis.
- Do not operate the detector in a potentially flammable environment.
- Avoid accumulation of harmful substances. Make sure that the installation site is well ventilated.
- Dispose of hazardous waste in an environmentally safe manner that is consistent with local regulations. Follow a regulated, approved waste disposal program.

WARNING—Biohazard

Biohazardous material, for example microorganisms, cell cultures, tissues, body fluids, and other biological agents can transmit infectious diseases. To avoid infections with these agents:

- Assume that all biological substances are at least potentially infectious.
- Wear personal protective equipment as required by the hazard and follow good laboratory practice.
- Dispose of biohazardous waste in an environmentally safe manner that is consistent with local regulations. Follow a regulated, approved waste disposal program.

WARNING—Self-Ignition of Solvents

Solvents with a self-ignition temperature below 150 °C might ignite when in contact with a hot surface (for example, due to leakage in the chromatography system). Avoid the use of these solvents.

WARNING—Hazardous Gases

Mobile phases and samples might contain volatile or flammable solvents. The handling of these substances can pose health and safety risks.

- Avoid accumulation of these substances. Make sure that the installation site is well ventilated.
- Avoid open flames and sparks. Do not operate the detector in the presence of flammable gases or fumes.

CAUTION—Escape of Hazardous Substances from PEEK™ Capillaries

In the Vanquish system, capillaries made of PEEK may be used. Swelling or attack by acids can cause PEEK capillaries to start leaking or to burst.

- Certain chemicals, for example, trichlormethane ($CHCl_3$), dimethyl sulfoxide (DMSO), or tetrahydrofuran (THF) can cause PEEK to swell.
- Concentrated acids, such as sulfuric acid and nitric acid, or a mixture of hexane, ethyl acetate, and methanol, can attack PEEK.
- Swelling or attack is not a problem with brief flushing procedures.
- For more information, refer to the technical literature on the chemical resistance of PEEK.

CAUTION—Allergic Reaction

Some capillaries in the Vanquish system are made of MP35N®, a nickel-cobalt based alloy. Individuals with sensitivity to nickel/cobalt may show an allergic reaction from skin contact.

CAUTION—Sparking due to Electrostatic Discharge

Liquid flowing through capillaries can generate static electricity. This effect is particularly present with insulating capillaries and non-conductive solvents (for example, pure acetonitrile). Discharge of electrostatic energy might lead to sparking, which could constitute a fire hazard. Prevent the generation of static electricity near the chromatography system.

2.3.6 In Case of Emergency

WARNING—Safety Hazard

In case of emergency, disconnect the detector from the power line.

2.4 Solvent and Additive Information

To protect optimal functionality of the Vanquish system, observe these recommendations on the use of solvents and additives:

- The system must be used with reversed-phase (RP) compatible solvents and additives only.

  TIP The Vanquish charged aerosol detector can also be used with normal-phase (NP) compatible solvents and additives if the other modules in the Vanquish system are compatible for normal-phase applications.
  Before you use normal-phase solvents and additives, make sure that all modules and components in the system are compatible for normal-phase applications. Refer to the *Operating Manuals* for the other modules in the system.

- Use only solvents and additives that are compatible with all parts in the flow path.
  For details about the materials that are used in the flow path of the detector, see the *Specifications* chapter. For information about the materials that are used in the flow path of the other modules in the Vanquish system, refer to the *Specifications* chapter in the *Operating Manual* for the module.
  - *For the charged aerosol detector*
    Observe the *Mobile Phase Guidelines for the Detector* in section 6.5.1, page 95.
  - *For other modules in the Vanquish system*
    Observe the general guidelines and recommendations in the *Vanquish System Operating Manual* on the use of solvents and additives in the chromatography system.
- Allowed ranges and concentrations for the charged aerosol detector:
  - pH range: 2-9.5
  - Volatile buffer concentration: less than or equal to 0.1 mol/L
  - Chloride concentration: Not recommended
- Observe the following for pH values higher than 9.5:
  Avoid using mobile phases with a pH value higher than 9.5. They can impair the functionality and performance of the nebulizer.

- Follow any specific recommendations presented in other sections of this manual. Refer also to the *operating manuals for all modules in the Vanquish system*. They may provide additional guidelines and information.

2.5 Compliance Information

Thermo Fisher Scientific performs complete testing and evaluation of its products to ensure full compliance with applicable domestic and international regulations. When the device is delivered to you, it meets all pertinent electromagnetic compatibility (EMC) and safety standards as described in this manual. For details, see section 11, page 173.

Changes that you make to the device may void compliance with one or more of these EMC and safety standards. Changes to the device include replacing a part or adding components, options, or peripherals not specifically authorized and qualified for the product by Thermo Fisher Scientific. To ensure continued compliance with EMC and safety standards, replacement parts and additional components, options, and peripherals must be ordered from Thermo Fisher Scientific or one of its authorized representatives.

The device has been shipped from the manufacturing site in a safe condition.

3 Detector Overview

This chapter introduces you to the detector and the main components.

3.1 Detector Features

The detector comprises the following main features:

- Charged aerosol detection method for liquid chromatography for detection of all non-volatile and many semi-volatile analytes
- Detection based on measuring charge that is proportional to the amount of analyte, and, for non-volatile analytes, independent of the chemical structure of the analyte
  In comparison to UV detection, a chromophore is not required for detection, and in comparison to mass spectrometry, ionization of the analyte is not necessary.
- Detection with great sub-nanogram sensitivity and a wide dynamic range
- FocusJet™ nebulizer with concentric design for extended low pump flow rate range
- Adjustable evaporation temperature for optimization of analyte response and use with a wider range of eluents
  - VH-detector: Adjustable range for the evaporation temperature
  - VF-detector: Selectable evaporation temperatures
- For data collection, the detector supports the following data acquisition rate:
  - VH-detector: Up to 200 Hz
  - VF-detector: Up to 100 Hz

3.2 Operating Principle

The detector is designed for charged aerosol detection with full compatibility in HPLC and UHPLC applications. In charged aerosol detection, an aerosol of dried analyte particles is formed after nebulization of column eluate. Electrical charge is imparted to these dried particles. The detector then measures the charge. Measured charge is proportional to the amount of analyte in the sample.

The following picture shows the interior components of the detector, and illustrates how the detector operates:

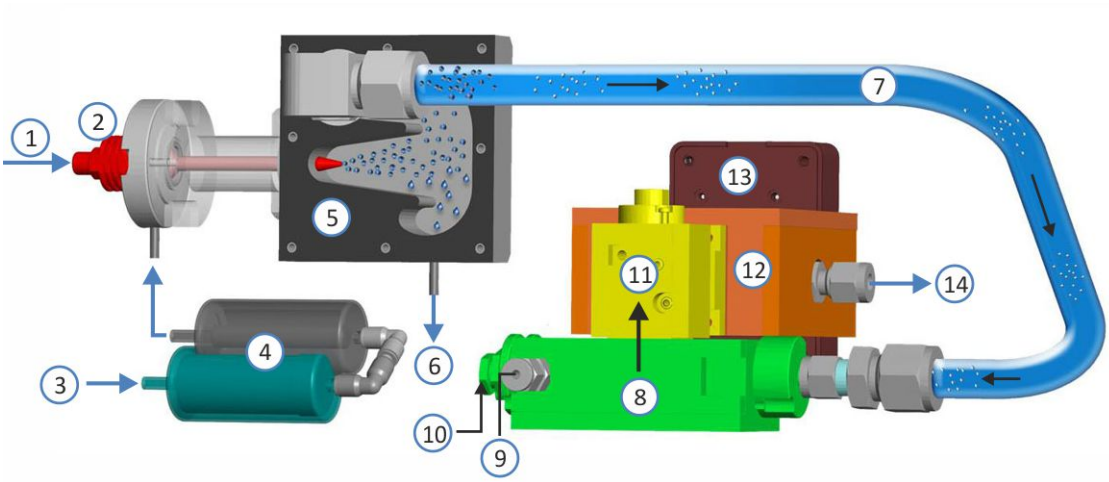

Figure 1: Operating principle of the detector

No.	Description	No.	Description
1	Eluate from column	8	Mixing chamber
2	Nebulizer	9	Charger gas inlet
3	Gas inlet	10	Corona charger
4	Gas filters	11	Ion trap
5	Spray chamber	12	Electrometer
6	Drain pump	13	Electrometer board
7	Evaporation tube	14	Gas exhaust

Eluate from the column enters the detector (no. 1) and flows to the nebulizer (no. 2). Pressurized gas streams through the gas inlet (no. 3) and passes through the charcoal gas filter and then the HEPA gas filter (no. 4). In the nebulizer (no. 2), the filtered gas and the eluate merge at the nebulizer tip to create an aerosol within the spray chamber (no. 5).

The largest aerosol droplets condense within the spray chamber (no. 5) and are removed by the drain pump (no. 6) through the waste outlet. Smaller droplets pass into a temperature-controlled evaporation tube (no. 7), in which solvent and more volatile components are vaporized.

By the end of the evaporation tube, the resulting aerosol particles enter the mixing chamber (no. 8), where they collide with a secondary stream of ionized gas (no. 9) that has passed through a corona charger (no. 10). Each dried aerosol particle undergoes surface diffusional charging, where the level of charge per particle is proportional to particle size and the cumulative charge of the population is directly related to the analyte amount.

In the ion trap (no. 11), higher mobility ions and smaller charged particles are removed. Lower mobility charged particles pass to a conductive filter and aggregate charge is measured with a sensitive electrometer (no. 12). Signal is processed by the electrometer board (no. 13) and sent to the chromatography data system. The resulting gas flow exits the detector through the gas exhaust (no. 14).

3.3 Interior Components

The user-accessible components of the detector are located directly behind the front doors:

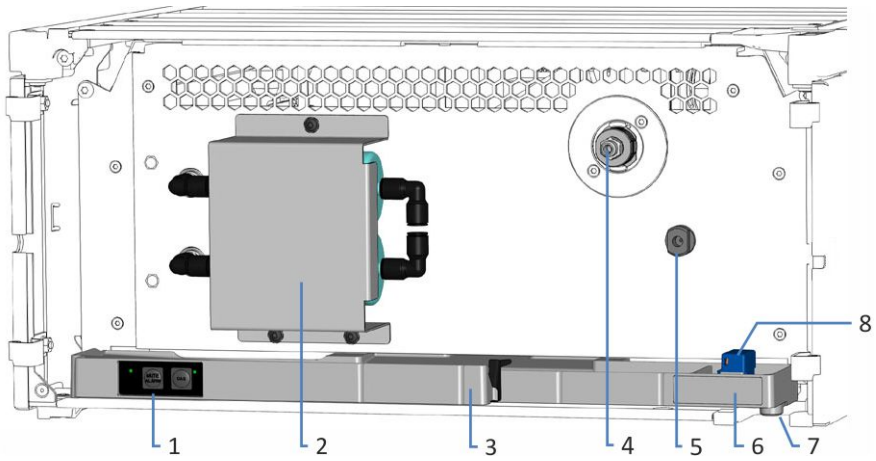

Figure 2: Interior view

No.	Description
1	Keypad with status indicators
2	Gas filter assembly behind the protective cover
3	Leak tray
4	Nebulizer (after installation)
5	Waste outlet
6	Type label, indicating the part number, module name, and serial number
7	Drain port
8	Leak sensor

3.4 Nebulizer

The FocusJet nebulizer is the liquid flow inlet of the charged aerosol detector. Eluate from the column flows into the nebulizer and merges with filtered gas that is supplied to the nebulizer. Due to the concentric flow design of the nebulizer, an aerosol is produced within the spray chamber.

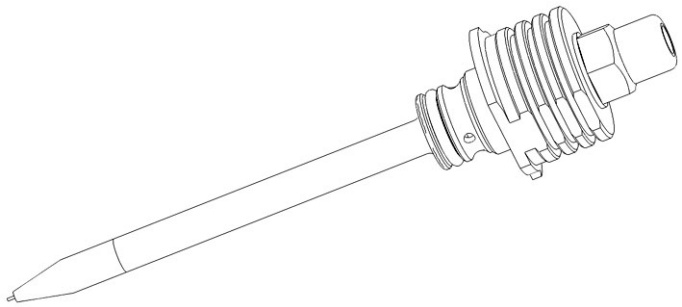

Figure 3: FocusJet nebulizer

3.5 Gas Filter Assembly

An assembly of two gas filters on the front side of the detector filters the supplied gas internally before it is used in the detector. The gas filters consist of a charcoal filter and a high-efficiency particulate air (HEPA) filter. Gas supplied through the gas inlet of the detector is first filtered in the charcoal gas filter (bottom filter) and then in the HEPA gas filter (top filter).

Sufficient filtering of the supplied gas, both externally and internally, ensures that the gas is clean and free from micro particles.

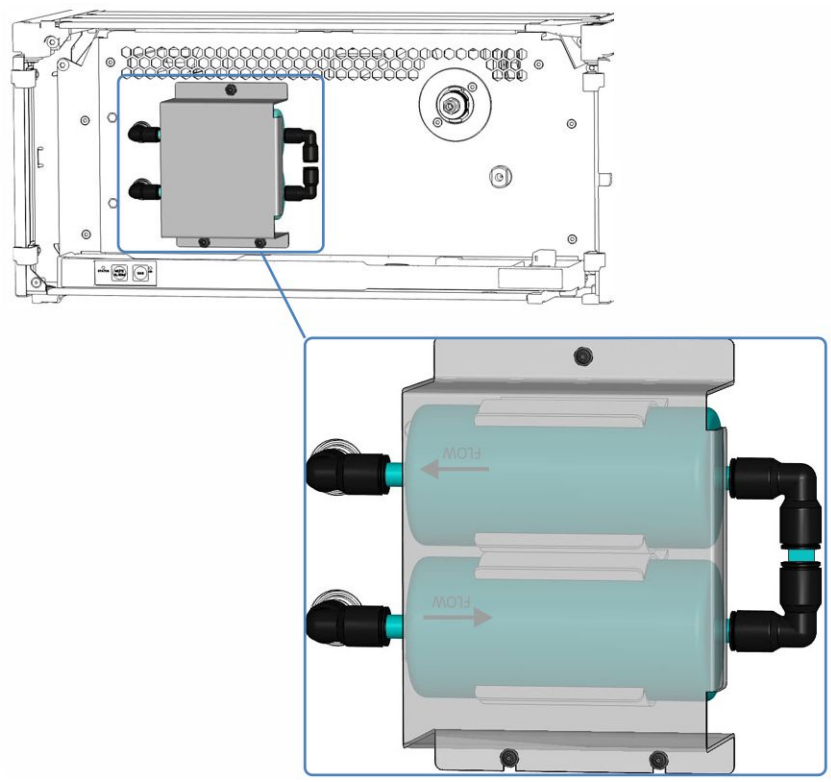

Figure 4: Gas filter assembly behind protective cover

3.6 Excess Liquid and Leak Detection

As leaks are a potential safety issue, sensors in the charged aerosol detector monitor the following:

- Excess liquid inside the detector gas flow path
  The liquid sensor inside the detector detects any liquid that accumulates inside. When excess liquid is present, the liquid sensor is activated.

  When the liquid sensor detects excess liquid (flooding) inside the detector, the status indicators change to red and beeping starts to alert you. The Chromeleon software automatically stops the pump flow and issues a message in the Audit Trail. Follow the instructions in this manual to eliminate the excess liquid.

- Liquid leaks
  The leak sensor in the leak tray detects liquid leaks from flow connections. The liquid is collected in the leak tray and guided to the drain port. From the drain port, the liquid is discharged to waste through the drain system of the Vanquish system.

  When the leak sensor detects leakage, the status indicators change to red and beeping starts to alert you. Follow the instructions in this manual to find and eliminate the source for the leakage.

3.7 Operation

The detector is designed to be operated from a computer configured with the Chromeleon Chromatography Data System (CDS). The Chromeleon software provides complete instrument control, data acquisition, and data management.

For a basic description of instrument control and automated sample analysis with the Chromeleon software, refer to the *Vanquish System Operating Manual*. Details on control and operation of the detector are available in the *Chromeleon Help*.

TIP The detector can be operated also with other data systems, such as Xcalibur™. In this case, installation of additional software is required in addition to the data system software. For details, contact the Thermo Fisher Scientific sales organization.

A keypad is available inside the detector, allowing you to perform certain basic functions directly from the detector.

4 Unpacking and Transport

This chapter provides information for unpacking and moving the detector and informs you about the scope of delivery.

4.1 Unpacking and Moving

Damaged Packaging, Defective on Arrival

Inspect the shipping container for signs of external damage and, after unpacking, inspect the detector for any signs of mechanical damage that might have occurred during shipment.

If you suspect that the detector may have been damaged during shipment, immediately notify the incoming carrier and Thermo Fisher Scientific about the damage. Shipping insurance will compensate for the damage only if reported immediately.

Unpacking the Detector

CAUTION—Heavy Load, Bulky Device

The detector is too heavy or bulky for one person alone to handle safely. To avoid personal injury or damage to the detector, observe the following guidelines:

- Physical handling of the detector, including lifting or moving, requires a team effort of two persons.
- A team effort is in particular required when lifting the detector into the system stack or when removing it.
- Use the carrying handles that were shipped with the detector to move or transport the detector. Never move or lift the detector by the front doors. This will damage the doors or the detector.

Tools required

Screwdriver, Torx® T20

Follow these steps

1. Place the shipping container on the floor and open it.
2. Remove the ship kit from the shipping container.
3. Remove the upper foam spacer from the detector.

4. Grasp the detector by the carrying handles. Slowly and carefully, lift the detector out of the shipping container.
   If the foam spacer under the detector is lifted out of the shipping container with the detector, remove it from the detector before you continue.

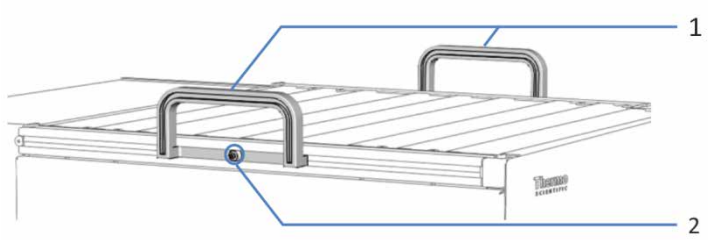

Figure 5: Carrying handles on the detector

No.	Component
1	Carrying handles
2	Attachment screw (one on each carrying handle)

5. Place the detector on a stable surface.
6. Transport the detector by the carrying handles to the installation site, if it is not already there, and place it in the system stack (see the *System Arrangement* section in this operating manual).
7. On each carrying handle, loosen the attachment screw until the carrying handle is moveable in the rail. Do not remove the screws from the carrying handles completely.
8. Slide off the carrying handles from the rails towards the rear of the detector.

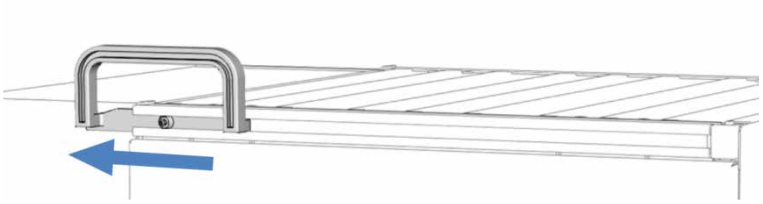

Figure 6: Sliding off the carrying handle from the left rail

TIP Keep the shipping container, the carrying handles with the attachment screws, and all packing material. These items will be needed if the detector is transported to a new location or shipped.

9. Some surfaces including the doors of the detector are covered by a protective film during shipment. Remove the protective film from all surfaces as applicable.

Moving the Detector after Installation

If you have to move the detector after it has been set up and installed in the Vanquish system, prepare the detector for transport and move it to the new location. Follow the instructions in section 7.12 Transporting or Shipping the Detector, page 142.

4.2 Scope of Delivery

The following items are included in the delivery:

- Detector with nebulizer
- Ship Kit
  For details about the kit content, see section 10.2 Ship Kit, page 169.
- Operating manual
- Power cord

5 Installation

This chapter specifies the requirements for the installation site and describes how to set up, install, and configure the detector in the Vanquish system and in the chromatography software.

5.1 Safety Guidelines for Installation

Pay attention to the following safety guidelines:

Observe all warning messages and precautionary statements presented in section 2.3 Safety Precautions (see page 19).

CAUTION—Heavy Load, Bulky Device

The detector is too heavy or bulky for one person alone to handle safely. To avoid personal injury or damage to the detector, observe the following guidelines:

- Physical handling of the detector, including lifting or moving, requires a team effort of two persons.
- A team effort is in particular required when lifting the detector into the system stack or when removing it.
- Use the carrying handles that were shipped with the detector to move or transport the detector. Never move or lift the detector by the front doors. This will damage the doors or the detector.

5.2 Installing the Detector

The Vanquish system is installed and set up by a Thermo Fisher Scientific service engineer, including all modules and options or parts shipped with them. The service engineer checks that the installation is correct and that the Vanquish system and modules operate as specified. The engineer also demonstrates the basic operation and main features.

If personnel other than a Thermo Fisher Scientific service engineer installs the detector, follow the steps below.

NOTICE The detector is part of the Vanquish system. Therefore, follow the order for installing the system modules as described in the *Vanquish System Operating Manual*.
When another detector is installed in the system, follow the instructions in this manual to install the charged aerosol detector in addition to the other detector.

1. Pay attention to the safety guidelines and observe all site requirements.
   For the safety guidelines when installing the detector, see section 5.1, page 46. For the site requirements, see section 5.3, page 49.
2. Set up the detector hardware. See section 5.5, page 56.
3. Set up the flow connections. See section 5.6, page 70.
4. Turn on the detector. See section 5.7, page 81.

TIP Before turning on the power to a Vanquish system module for the first time, verify that the chromatography software is installed on the data system computer. When the power is turned on, the required USB drivers are automatically found and the Windows® operating system can detect the device.

5. Set up the detector in the software. See section 5.8, page 82.

6. *Recommended:*
   Perform Instrument Installation Qualification.

   In Chromeleon, a wizard is available to guide you through the qualification process:

   - On the Chromeleon 7 Console: Click **Tools > Instrument Qualification > Installation Qualification**.
   - In the Chromeleon 6.8 Browser: Click **Qualification > Instruments IQ**.

   Follow the instructions in the *Instruments Installation Qualification Operating Instructions*. The manual provides information about the required materials and detailed instructions.

NOTICE If the detector is operated with another data system, refer to the documentation for the software that you are using and/or perform the qualification manually.
The *Instruments Installation Qualification Operating Instructions* provide information about the parameters to be adapted and the required settings.

7. *Recommended:*
   Perform Operational Qualification.

   The qualification kit includes all materials required for the qualification and detailed instructions.

5.3 Site Requirements

The operating environment is important to ensure optimal performance of the detector. This section provides important requirements for the installation site. Note the following:

- Operate the detector only under appropriate laboratory conditions.
- The detector is intended to be part of the Vanquish system. Observe the site requirements for the Vanquish system as stated in the *Vanquish System Operating Manual*.
- For specifications, see the *Specifications* section in this operating manual and the *Operating Manuals* for the other modules in the Vanquish system.

Power Considerations

The power supply of the device has wide-ranging capability, accepting any line voltage in the range specified for the device.

To avoid power fluctuations, the use of an uninterruptible power supply (UPS) is recommended.

CAUTION—Electric Shock or Damage to the Device

- Connecting the device to a line voltage higher or lower than specified could result in personal injury or damage to the device. Therefore, connect the device to the specified line voltage only.
- Never connect the device to a power socket that is shared with other equipment (for example, multiple sockets).
- Do not use extensions cords.
- After the power to the device is turned off, the device is still energized as long as the power cord is connected. Repair work on the device while the device is connected to power could lead to personal injury. Therefore, always unplug the power cord before starting repair work inside the device. If you were instructed to remove any covers or panels, do not connect the power cord to the device while the cover or panels are removed.

Power Cord

The power cords are designed to match the wall socket requirements of the country in which they are used. The end of the power cords that plugs into the power socket on the device is identical for all power cords. The end of the power cords that plugs into the wall socket is different.

WARNING—Electric Shock or Damage to the Device

- Never use a power cord other than the power cords provided by Thermo Fisher Scientific for the device.
- Only use a power cord that is designed for the country in which you use the device.
- Do not use extensions cords.
- Never plug the power cord to a power socket that is shared with other equipment (for example, multiple sockets).
- Operate the device only from a power outlet that has a protective ground connection.
- In case of emergency, it must be possible to reach the power cord easily at any time to disconnect the device from the power line.

WARNING—Electric Shock or Damage to a Product

Misuse of the power cords could cause personal injury or damage the instrument. Use the power cords provided by Thermo Fisher Scientific only for the purpose for which they are intended. Do not use them for any other purpose, for example, for connecting other instruments.

Condensation

NOTICE Condensation in the device can damage the electronics. Therefore, when using, shipping, or storing the device, avoid or minimize conditions that can lead to a build-up of condensation in the device. For example, avoid significant or fast changes in environmental conditions. If you suspect that condensation is present, allow the device to warm up to room temperature. This may take several hours. Wait until the condensation is gone completely before connecting the detector to the power line.

Ventilation

CAUTION—Hazardous Fumes

The exhaust gas of the detector may contain hazardous fumes that pose health and safety risks. Avoid an accumulation of gas. The exhaust gas must always be removed by proper ventilation. Make sure that the installation site is well ventilated. Do not vent directly into the laboratory.

In addition to the operating conditions for ventilation stated in the *Vanquish System Operating Manual*, make sure that the location fulfils the following requirements.

- Operate the detector nearby the gas supply and ventilation sources.
- Ventilation must be at atmospheric pressure with no vacuum or negative pressure applied.

  NOTICE A vacuum in the ventilation can cause a depressurization inside the detector. This can impair detector operation and lead to a decreased performance. Avoid a vacuum or a negative pressure in the ventilation of the detector.

- Install the detector in a well-ventilated laboratory. Exhaust gases (including carrier gas, vaporized eluents and solute micro particles) exit on the right side of the detector through the gas exhaust port. The exhaust gas may contain volatile organic compounds in low concentration. Make sure that the detector is properly vented. Direct the gas exhaust tubing to a fume hood or connect it to another ventilation device.

Gas Supply

CAUTION—Explosion Hazard or Damage to the Detector

When using tetrahydrofuran (THF), the use of air as supplied gas may pose an explosion hazard. This can pose a safety and health risk and damage the detector. Always use nitrogen with tetrahydrofuran or other highly combustible solvents.

CAUTION—Excessive Gas Supply Pressure

An improper or excessive gas supply pressure can lead to an overpressure in detector that can cause the detector to release gas. This can pose a health and safety risk.

- Observe the gas supply pressure range that is specified for the detector. Do not exceed the maximum gas supply pressure.
- If the overpressure relief valve is releasing gas as a result of an overpressure in the detector during operation, turn off the detector immediately. Remedy the situation as described in the *Resolving Gas Supply Overpressure* section in this manual.

CAUTION—Gas Filter Rupture upon Excessive Gas Supply Pressure

An excessive supply gas pressure can lead to an overpressure in the detector and cause the gas filters to rupture. This can pose a health and safety risk.

- Turn on the gas supply only when the gas filters are properly connected to the detector and the protective cover is properly installed.
- Observe the gas supply pressure range that is specified for the detector. Do not exceed the maximum gas supply pressure.
- Before you start the replacement of the gas filter assembly, make sure that the gas supply and the detector gas flow are turned off.

NOTICE—Gas Specifications

The requirements and specifications for the gas supplied to the detector have major impact on the detector performance. Observe the following notes:

- If the gas supply pressure is varying or dropping below the specified pressure range, it can impair the performance of the detector or even damage the detector.
- Non-volatile hydrocarbons, such as compressor oils, in the gas supplied to the detector can cause permanent damage to the detector.
- If the supply gas is contaminated with particles (size ≥ 0.1 µm), water vapor or other non-volatile substances, it can impair the performance or even damage the detector.
- Observe all requirements and specifications for the supply gas in this manual to avoid damage to the detector.

- The gas supply and the gas supply pressure for the detector must meet the gas specifications in section 9.1 Performance Specifications, page 164.
- Make sure that the gas supply is regulated to a stable gas pressure that is within the specified gas pressure range.
- The gas supplied to the detector must be either air or nitrogen. Do not use helium or other supply gases.
- Nitrogen gas (typically ≥ 95% nitrogen purity) is recommended for most applications. Air may be used when working with mobile phases of low combustibility.
- With highly combustible mobile phases, such as tetrahydrofuran (THF) and other ethers and ketones, use nitrogen as supply gas.

- The use of a non-bottled gas source is recommended, such as
  - A nitrogen generator with suitable air compressor or with a suitable in-house air source
  - Medical-grade nitrogen from an in-house liquid nitrogen source

TIP Use of smaller compressed nitrogen cylinders or liquid nitrogen containers may be a quick and easy source of nitrogen during installation. However, it is not recommended for routine operation.

- The gas consumption of the detector is typically ≤ 4 L/min.
- The supply gas must be free from water vapor, free from particles, and must not contain non-volatile hydrocarbons, such as compressor oils.
  If necessary, use a sub-micron particle filter or carbon filter in combination with a water condensation trap located close to the gas source.
- Make sure that the gas supply is ready for operation. Follow the instructions in the *User Documentation* for the gas supply.

5.4 Accessing the Interior Components

To access the interior components in the detector, open the front doors. To allow easy access from the front, the user-accessible components and flow connections in the detector are located directly behind the doors.

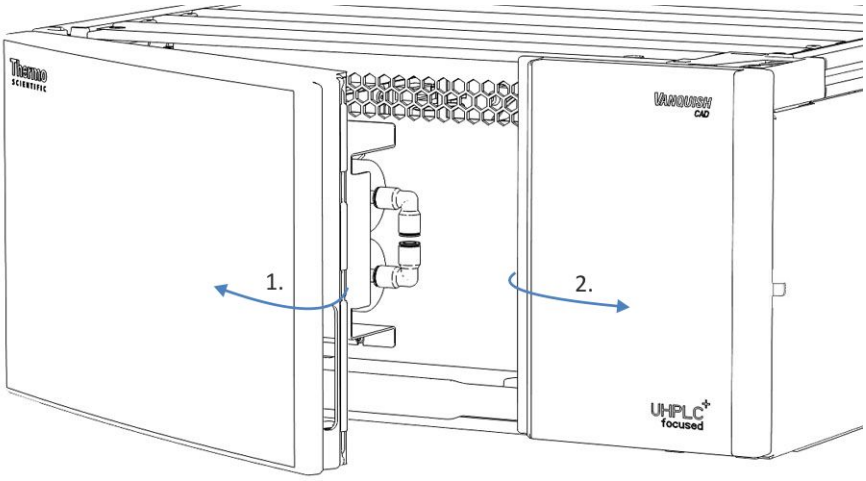

Figure 7: Opening the front doors

5.5 Setting Up the Hardware

This section describes how to set up the hardware and provides information about the detector connectors and cables.

5.5.1 System Arrangement

The detector is part of the Vanquish system. The system modules are typically arranged in a system stack, with the arrangement depending on the system configuration.

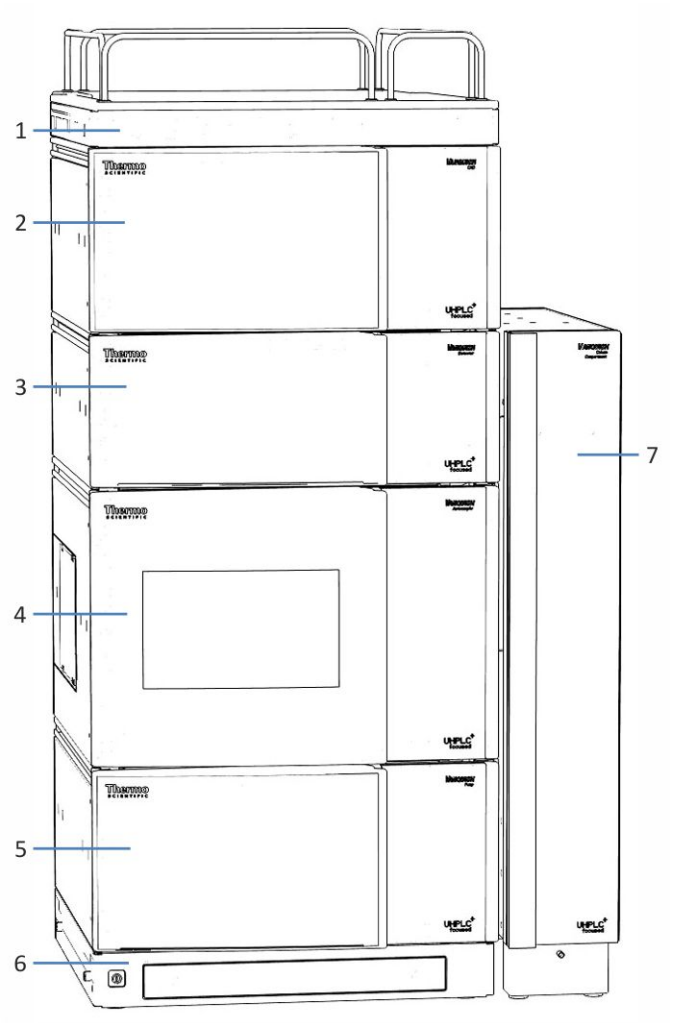

No.	Description
1	Solvent Rack
2	Charged Aerosol Detector
3	Diode Array Detector
4	Autosampler
5	Pump
6	System Base
7	Column Compartment

Figure 8: Vanquish system, configuration with charged aerosol detector and diode array detector (example)

Follow these steps

Depending on the system configuration, follow the steps as required:

- *If the charged aerosol detector is the only detector in the Vanquish system*
  Follow the instructions in the *Vanquish System Operating Manual* to set up the system stack.
- *If the charged aerosol detector is the second detector in the Vanquish system, for example after the diode array detector*
  Follow these steps:
  1. Set up the system stack with the first detector in the system, such as the diode array detector. For instructions, refer to the *Vanquish System Operating Manual*. Do not install the solvent rack and the column compartment yet.
  2. To position the charged aerosol detector, lift it by its carrying handles. Place the detector on top of the stack approximately 5 cm before the end of the rails. Lift the front part of the detector and push the detector towards the rear until the detector clicks into place.
  3. To remove the carrying handles, follow the corresponding steps in section 4.1, page 40.
  4. Place the solvent rack on the detector approximately 5 cm before the end of the rails. Lift the front part of the solvent rack and push the solvent rack towards the rear until it clicks into place.
  5. In the system stack configuration with the charged aerosol detector, the column compartment is installed to the right of the system. For installation instructions, refer to the *Operating Manual* for the column compartment.

5.5.2 Connecting the Detector

Detector Connectors

The following connectors are provided on the detector:

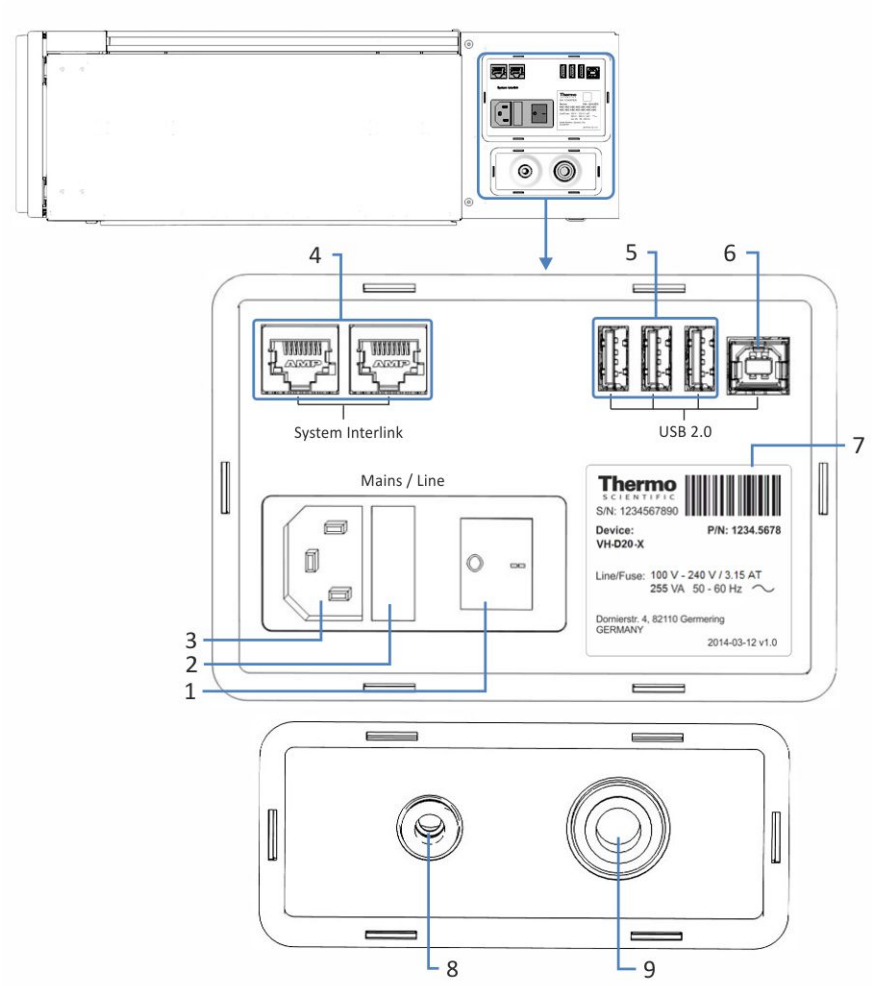

Figure 9: Electrical and gas connectors on the right side of the detector

No.	Description
1	Main power switch (on/off control)
2	Fuse holder
3	Power-inlet connector

No.	Description
4	System Interlink port Allows power on/off control for the detector from the Vanquish system base and additional device communication and synchronization between the autosampler and the detector In addition, the connection provides device communication between the charged aerosol detector and the pump. For example, certain problems in the charged aerosol detector cause an automatic stop of the pump flow to prevent a build-up of excess liquid inside the detector.
5	USB hub ("A" type connector) Allows connection to other modules in the Vanquish system
6	USB (Universal Serial Bus) port ("B" type connector) Allows connection to other modules in the Vanquish system or the computer on which the data management system is installed, such as the Chromeleon software
7	Rating plate, indicating part number, module name, line and fuse rating, serial number, and the manufacturer's address
8	Gas inlet Allows connection to a gas supply.
9	Gas exhaust Allows connection to ventilation.

TIP Thermo Fisher Scientific recommends using the USB ports only as described above. If the USB ports are used for any other purpose, Thermo Fisher Scientific cannot ensure proper functionality.

Connecting the Detector

NOTICE

- Never use defective communication cables. If you suspect that a cable is defective, replace the cable.
- To ensure trouble-free operation, use only the cables provided by Thermo Fisher Scientific for connecting the detector.

1. Place the detector in the system as required by the system configuration. For details, see section 5.5.1 System Arrangement, page 56.

2. Connect the required interface cables to the detector.

   - *If the charged aerosol detector is the only detector in the Vanquish system*
     Follow the instructions in the *Vanquish System Operating Manual* to set up the USB and system interlink connections in the system.
   - *If the charged aerosol detector is the second detector in the Vanquish system, for example after the diode array detector*
     Set up the USB and system interlink connections as follows (see Figure 10, page 61):

     a) Follow the instructions in the *Vanquish System Operating Manual* to connect the other modules in the system up to the diode array detector.

     b) Connect the "B" connector of a USB cable to the **USB** port on the charged aerosol detector, and connect the "A" connector of the USB cable from the charged aerosol detector to the **USB** hub on the diode array detector.

     c) Connect the "A" connector of the USB cable from the diode array detector to a USB port (2.0 or higher) on the computer.

     d) Connect one end of the system interlink cable to the free **System Interlink** port on the diode array detector, and the other end to a **System Interlink** port on the charged aerosol detector.

     e) Connect one end of the system interlink cable to the free **System Interlink** port on the charged aerosol detector, and the other end to a **System Interlink** port on the column compartment.

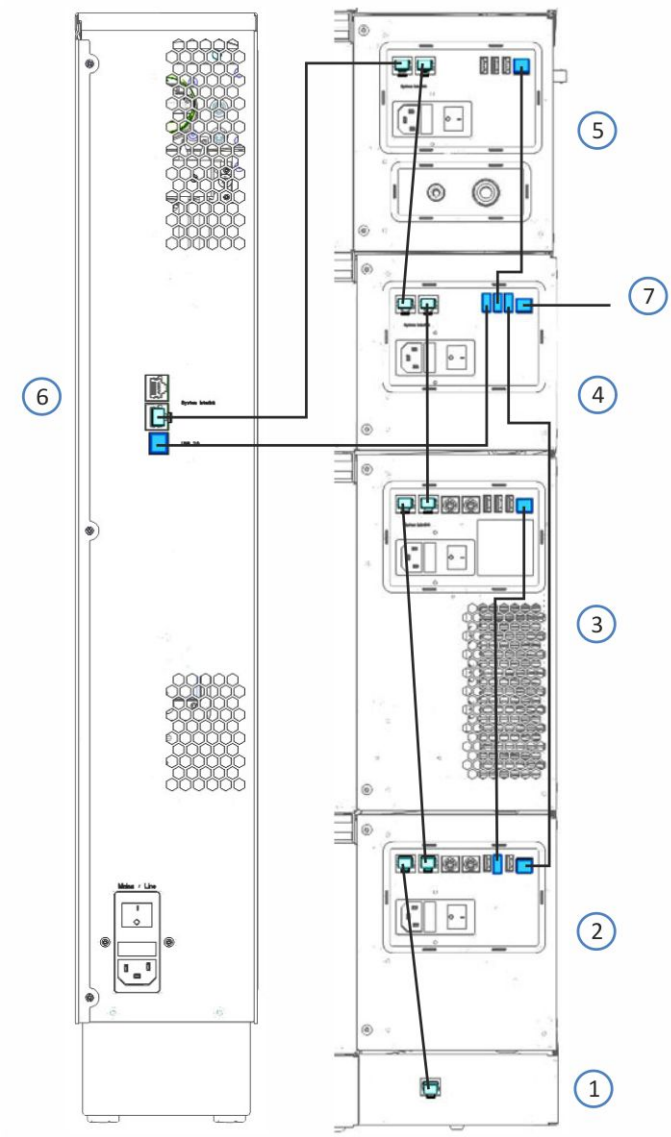

No.	Description
1	System base
2	Pump
3	Sampler
4	Diode array detector
5	Charged aerosol detector
6	Column compartment
7	Connection to computer

Figure 10: Interface cable connections in the Vanquish system with charged aerosol detector and diode array detector

3. Verify that the power switch on the detector is set to OFF.

4. Connect the power cord to the power-inlet connector on the detector.

NOTICE Before connecting the detector to the power line, be sure that no condensation is present in the device. Condensation in the device can damage the electronics. If you suspect that condensation is present, allow the device to warm up to room temperature. This may take several hours. Wait until the condensation is completely gone before proceeding.

5. Connect the free end of the power cord to an appropriate power source.

5.5.3 Installing the Nebulizer

This section describes the installation of the FocusJet nebulizer.

CAUTION—Sharp Tip of Nebulizer Capillary

The fused-silica capillary inside the nebulizer protrudes from the nebulizer tip. The nebulizer capillary is fragile and sharp and can cause personal injury and damage to the capillary. To avoid personal injury, always wear safety glasses when handling the nebulizer. Do not touch the nebulizer tip. Handle the nebulizer with care.

NOTICE—Sensitive Nebulizer

The nebulizer is highly sensitive to contamination and damage. Observe the following safety notes:

- The nebulizer is highly sensitive to contamination. Even minute particles on the nebulizer can lead to contamination and poor detector performance. Always wear clean-room gloves when you install or remove the nebulizer.
- The fused-silica capillary inside the nebulizer is fragile and may be subject to mechanical vibrations during transport. Visually inspect the nebulizer surfaces and the nebulizer tip upon unpacking. For pictures of the nebulizer, see the *Preparations* below.
- Operating the nebulizer with a gas pressure other than the pressure specified for this nebulizer can damage the nebulizer and the detector. After installation of the nebulizer, set the nebulizer gas pressure to the pressure that is specified for your nebulizer. The nebulizer gas pressure is defined on the gas pressure certificate that is shipped with the nebulizer.

Parts and additional items required

- Clean-room gloves (powder-free)
- FocusJet nebulizer with dedicated nebulizer gas pressure certificate
- *Optional:* Deionized water

Preparations

1. Wear clean-room gloves.
2. Remove the packed nebulizer from behind the detector doors.
3. Unpack the nebulizer carefully from the packaging. Locate the gas pressure certificate for the nebulizer.
   Keep the nebulizer packaging to have it available when transporting the nebulizer.

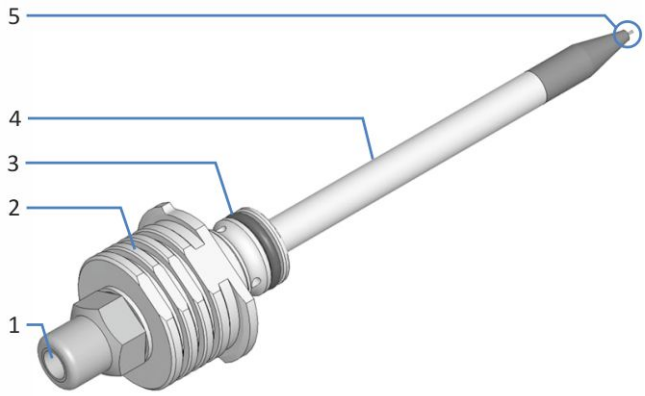

Figure 11: Parts of the nebulizer

No.	Description
1	Liquid flow inlet
2	Handle
3	Sealing bushing with sealing ring
4	Spray pipe
5	Nebulizer capillary on the tip of the spray pipe

4. Remove the protective tubing from the nebulizer spray pipe carefully. Do not to touch the nebulizer tip with the protective tubing, as it can damage the tip.
   Keep the protective tubing to have it available when transporting the nebulizer.

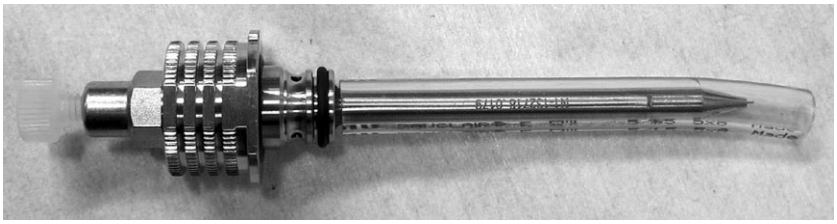

Figure 12: Nebulizer with protective tubing and plug on the flow inlet

Follow these steps

1. On the front of the detector, remove the dust seal plug from the opening for the nebulizer.
   Keep the dust seal plug to have it available when transporting the detector.

Figure 13: Dust seal plug installed in the nebulizer opening

2. Insert the nebulizer in the opening in the front panel of the detector. Observe the following:

   TIP To facilitate inserting the nebulizer in the nebulizer opening, moisten the sealing ring on the sealing bushing with deionized water.

   - The nebulizer tip must point to the opening in the middle of the nebulizer opening. Avoid the nebulizer tip from touching the sides of the nebulizer opening, as this can damage the tip.

- Mind the correct orientation of the nebulizer: The gripping sides of the nebulizer are on the top and bottom side of the handle. The protruding sides for attachment are on the left and right side of the handle. See the picture below.

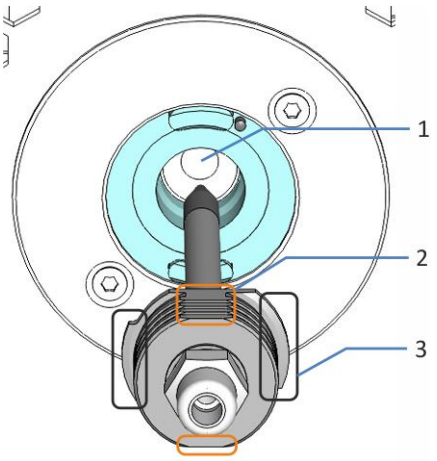

No.	Description
1	Opening in the middle of the nebulizer opening
2	Gripping sides on top and bottom handle side
3	Protruding sides on left and right handle side

Figure 14: Correct orientation of the nebulizer for installation

3. Push the nebulizer into the opening until the spray pipe and sealing bushing are completely in the opening. The nebulizer handle must lie flush against the nebulizer opening.

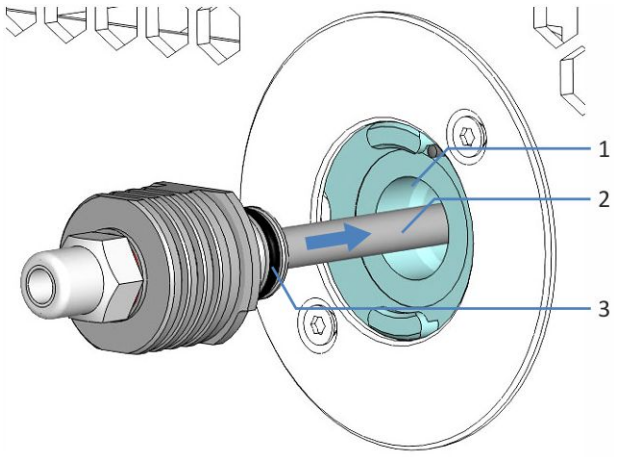

Figure 15: Completely inserting the nebulizer

No.	Description	No.	Description
1	Opening for the nebulizer on the interior panel of the detector	2	Spray pipe
		3	Sealing ring in the sealing bushing

4. Turn the nebulizer by 90 degrees clockwise in the opening to lock the nebulizer. Check that the protruding sides on the nebulizer arrest behind the two locks of the opening and lie against the alignment pin.

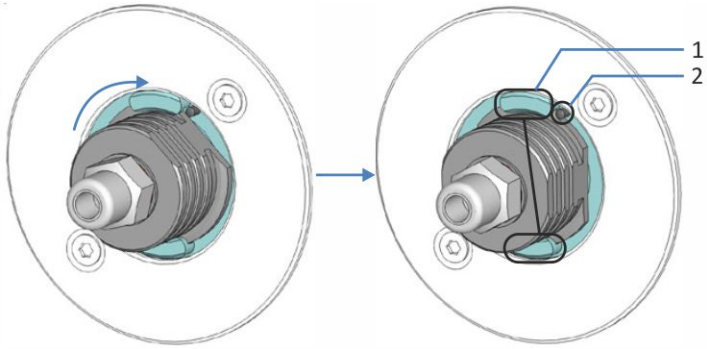

Figure 16: Locking the nebulizer in the detector

No.	Description
1	Locks on the nebulizer opening
2	Alignment pin

5. *After the detector has been turned on*
   Set the nebulizer gas pressure that is specified for your nebulizer. See section 6.5.2, page 98.

5.5.4 Connecting the Gas Inlet and Exhaust Tubes

This section describes the connection of the gas inlet and exhaust tubes to the detector.

Parts required

- Gas supply
- Ventilation appliance
- Parts for connecting the gas supply:
  - Gas inlet elbow connector
  - Gas inlet tubing
- Parts for connecting the gas exhaust:
  - Gas exhaust elbow connector
  - Gas exhaust tubing

Tools required

Tubing cutter (optional)

Preparations

1. Observe the site requirements for the gas supply and the ventilation (see section 5.3, page 49).
2. Check the gas tubes and elbow connectors. Observe the following:
   - Use only the gas tubes and elbow connectors that are shipped with the detector or additional or spare parts as recommended by Thermo Fisher Scientific.
   - The connectors must be free from contaminants. Even minute particles may cause damage to the system or lead to invalid test results.
   - Do not install gas tubes or connection unions that are stressed, nicked, kinked, or otherwise damaged.

Follow these steps

1. Connect the gas inlet tubing to the gas supply and route it to the detector.

2. Connect the gas exhaust tubing to the ventilation and route it to the detector.

3. Check the length of the gas tubes.
   The gas tubes should go straight to the detector. If the gas tubes are longer than required, use a tubing cutter to cut the tubes straight to the required length. Make sure that the cut is at a right angle to the length of the gas tubes.

4. Connect the gas tubes to the elbow connectors. Mind the correct orientation of the elbow connectors (see Figure 17).

   a) Connect the gas inlet tubing to the gas inlet elbow connector.

   b) Connect the gas exhaust tubing to the gas exhaust elbow connector.

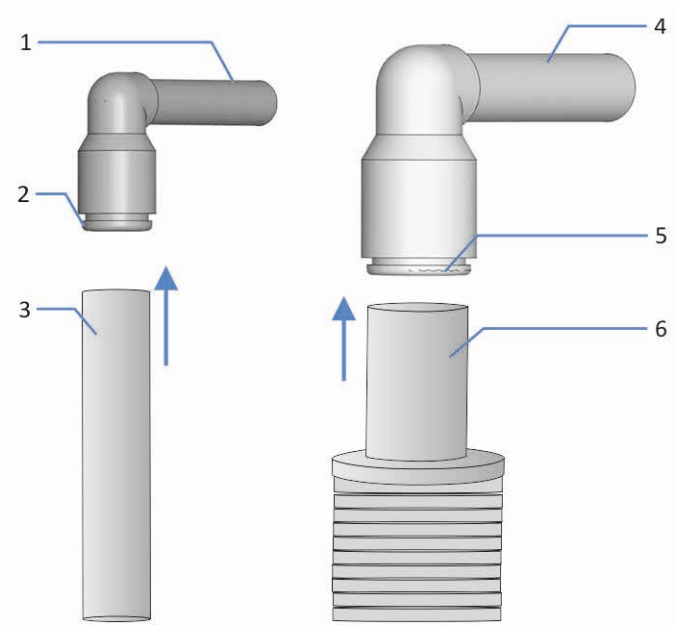

Figure 17: Connecting gas tubes to the elbow connectors

No.	Description	No.	Description
1	Connection stem to gas inlet port	4	Connection stem to gas exhaust port
2	Connector for gas inlet tubing	5	Connector for gas exhaust tubing
3	Gas inlet tubing	6	Gas exhaust tubing

5. On the right side of the detector, connect the elbow connectors:

   a) On the left port (gas inlet), push the connection stem of the gas inlet elbow connector (no. 2) into the port (no. 1).

   b) On the right port (gas exhaust), push the connection stem of the gas exhaust elbow connector (no. 4) into the port (no. 3).

   c) Slightly pull on each elbow connector to check that they are properly locked in the ports. If an elbow connector slips out of a port, push it a little bit further into the port and repeat the check.

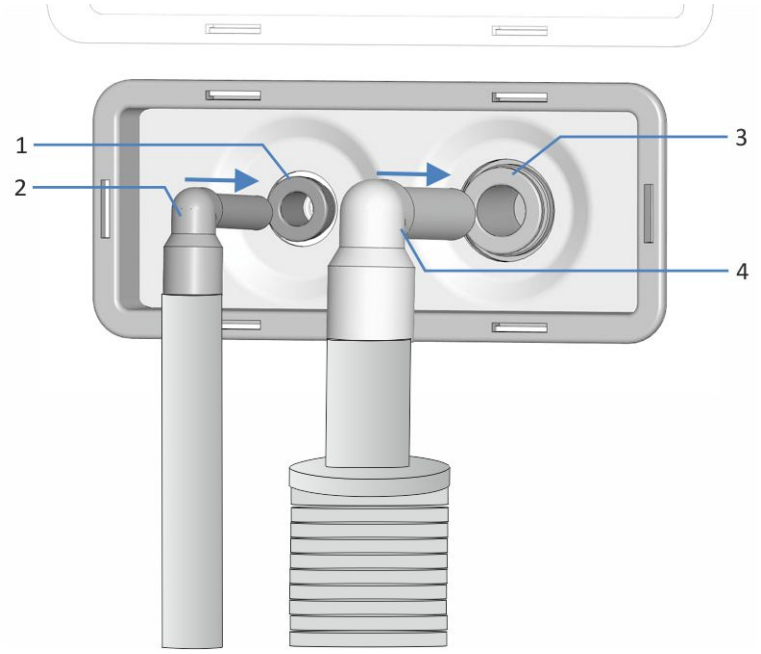

Figure 18: Pushing in the connection unions

No.	Description	No.	Description
1	Gas inlet port	3	Gas exhaust port
2	Gas inlet elbow connector with gas inlet tubing	4	Gas exhaust elbow connector with gas exhaust tubing

5.6 Setting Up the Liquid Flow Connections

5.6.1 General Information and Guidelines

This section describes how to set up the flow connections to and from the detector and additional flow connections if required.

When setting up flow connections, follow these rules and recommendations:

Flow connections can be filled with hazardous substances. Observe the warning messages and precautionary statements presented in section 2.3 Safety Precautions (see page 19).

NOTICE *Before* you connect the charged aerosol detector in the system flow path:
When you install devices or components to the system, always flush them to waste before connecting them in the system flow path. To flush the Vanquish modules, follow the instructions in the *Vanquish System Operating Manual*.
Flushing the charged aerosol detector will be performed later during equilibration.

- Dirty components can contaminate the chromatography system. Contamination leads to poor performance of the modules and entire system or can even cause damage to the modules and system. Therefore:
  - Always wear appropriate gloves.
  - Place the components only on a clean, lint-free surface.
  - Keep your tools clean.
  - Use only lint-free cloth for cleaning.
- For installation instructions and guidelines and for handling recommendations, see section 5.6.3 Connecting Fittings, Capillaries, and Tubing, page 73.

Follow these steps

To set up the liquid flow connections and complete the installation of the detector, follow these steps:

1. Connect the waste line (see section 5.6.4, page 75).
2. Connect the inlet capillary to the nebulizer (see section 5.6.5, page 76).
3. Connect the detector to the drain system (see section 5.6.6, page 80).

TIP Components or connections in the flow path to other system modules may be closed with plugs to protect the component or connection during transport. When you remove the plugs to connect the detector in the system, keep the plugs. You may need them to close the connections again, for example, for future transport.

5.6.2 Guiding Capillaries and Tubing Through the System

Flow connections between the modules of the Vanquish system are guided through either the tubing chase in the devices or the guide holes in the device housings.

Tubing Chase, Tubing Guide, Tubing Bracket

To guide certain tubes and capillaries (solvent tubing, wash liquid tubing, detector waste capillary) from the top module to the bottom module in the Vanquish system stack, the stackable modules have a tubing chase on the inside right.

The tubing chase provides four tubing guides. Each guide can hold up to three tubes or capillaries.

In each module, push the tube (or capillary) into the appropriate guide (see picture).

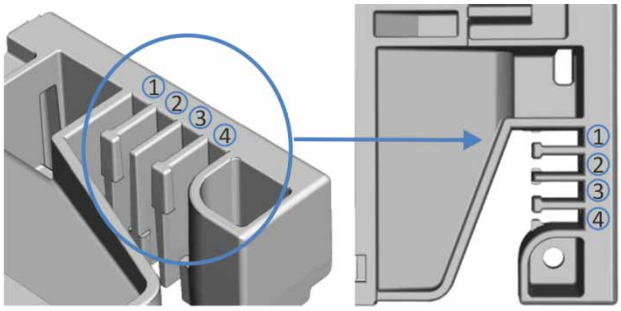

Figure 19: Tubing chase with tubing guides (left: view from inside, right: view from top)

No.	Use for
1	Solvent tubing (up to three solvent lines, preferably routed to the upper degas chambers)
2	Solvent tubing (up to three solvent lines)
3	Wash liquid tubing (seal wash, autosampler needle wash)
4	Detector waste capillary

Tubing brackets are available for holding the tubing in place. Slip the bracket side onto the drain pipe, and clamp the other side behind the front panel (see picture).

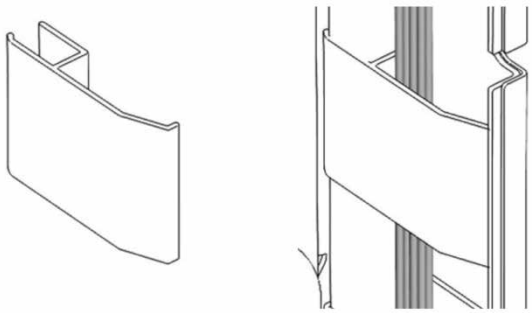

Figure 20: Tubing bracket (left), tubing bracket installed (right)

Guide Holes

Guide holes are provided at specific positions in the device housings. Route flow connections from one module to the next module in the Vanquish system through the appropriate guide hole when instructed to do so in the manual.

5.6.3 Connecting Fittings, Capillaries, and Tubing

This section provides information about how to connect and handle capillaries, fittings, and tubing.

5.6.3.1 General Guidelines

When connecting capillaries and tubing, follow these general recommendations:

- Use only the capillaries and tubing (for example, solvent lines or waste tubing) that are shipped with the detector or additional or spare capillaries and tubing as recommended by Thermo Fisher Scientific.
- The connectors must be free from contaminants. Even minute particles may cause damage to the system or lead to invalid test results.
- Do not install capillaries or tubing that is stressed, nicked, kinked, or otherwise damaged.
- Install capillaries and fittings only at the positions for which they are intended.

5.6.3.2 Connecting Viper Capillaries

This section describes how to connect Viper™ capillaries. All Viper flow connections in the Vanquish system are designed to be finger-tight.

To connect Viper capillaries with knurl, follow these steps:

NOTICE

- Tighten or loosen Viper capillaries *only* with your fingers. Do not use tools other than the knurl that comes with the capillary.
- To avoid damage to the capillary or connection, tighten and loosen the Viper connections only at atmospheric system pressure.

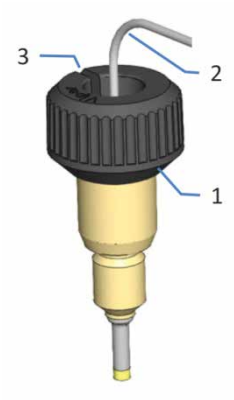

No.	Description
1	Knurl
2	Capillary
3	Slot

Figure 21: Viper fitting with knurl

1. Insert the Viper capillary into the connection port.
2. Tighten the connection by the knurl.

TIP Note the slot in the knurl. For narrow connections, you can easily remove the knurls from neighboring capillaries through this slot and attach them again later.

3. If the connection leaks:
   a) Tighten the connection a little more.
   b) If leakage continues, remove the capillary.
   c) Clean the capillary ends carefully by using a lint-free tissue wetted with isopropanol.
   d) Reinstall the capillary.
   e) If the connection continues to leak, install a new Viper capillary.

5.6.4 Connecting the Waste Line

NOTICE Extending or combining the waste line can cause a backpressure in the line that can lead to an excess liquid build-up inside the detector. Avoid extending or combining the waste line. Make sure that the waste line drains freely into waste.

Parts required

Waste line for connection between waste outlet and waste container

Tools required

Tubing cutter (optional)

Preparations

1. Route the waste line through the detector waste outlet in the system base to waste. Follow the instructions in the *Vanquish System Operating Manual*.
2. On the waste outlet on the detector, remove the plug.

Follow these steps

1. Route the waste line from the system base to the detector, through the tubing guides of the system modules below the detector.
2. On the waste outlet on the detector, connect the waste line.

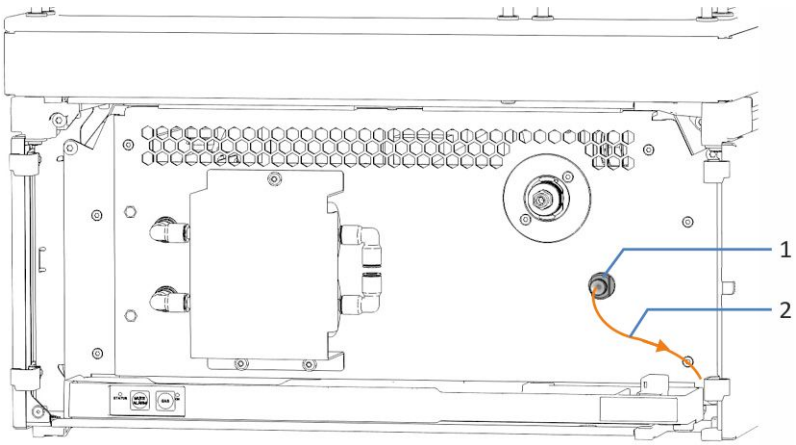

Figure 22: Waste line connected to the waste port

No.	Description
1	Waste outlet
2	Waste line

3. Check the waste line over the entire flow path:

   a) Make sure that no bending, pinching or squeezing of the waste line is present at any point in the flow path.

   b) If you have to cut tubing to length, use a tubing cutter. Make sure that the cut is at right angle to the length of the line.

      When cutting the waste line to length, also make sure that the cut is not crimped.

      The waste line should go straight to the system base and to waste. Make sure that the line is positioned straight in the tubing guides.

5.6.5 Connecting the Inlet Capillary to the Nebulizer

Depending on the modules in your Vanquish system, you can connect the inlet capillary to the nebulizer as follows:

- Directly from the column,

  –or–

- From the flow cell of a first detector, such as the diode array detector, in the Vanquish system flow path (series flow connection). In a series liquid flow configuration, one flow path from the pump is used for both detectors installed in the system.

Parts required

Inlet capillary for connection to the nebulizer (shipped with the detector)

TIP Keep the capillary connection to the charged aerosol detector as short as possible to minimize peak dispersion.

Preparations

1. Flush the system modules and capillaries upstream of the detector to waste thoroughly before you connect the detector to the system flow path. Refer to the *Vanquish System Operating Manual*.

2. On the nebulizer, remove the plug from the nebulizer flow inlet.

Follow these steps

Route and connect the capillary to the nebulizer as required by the system arrangement:

- Connecting the capillary between column and nebulizer (see section 5.6.5.1, page 77)

  –or–

- Connecting the capillary between flow cell and nebulizer (see section 5.6.5.2, page 78)

Follow the respective instructions.

5.6.5.1 *Connecting the Capillary Between Column and Nebulizer*

If the charged aerosol detector is the only detector in the Vanquish system flow path, connect the inlet capillary between column and nebulizer.

Preparations

See section 5.6.5, page 76.

Follow these steps

1. Connect the capillary to the column outlet.
2. Route the inlet capillary from the column compartment through the guide hole in the detector enclosure to the nebulizer. Use the guide hole that is next to the column compartment.
3. Connect the inlet capillary to the nebulizer.

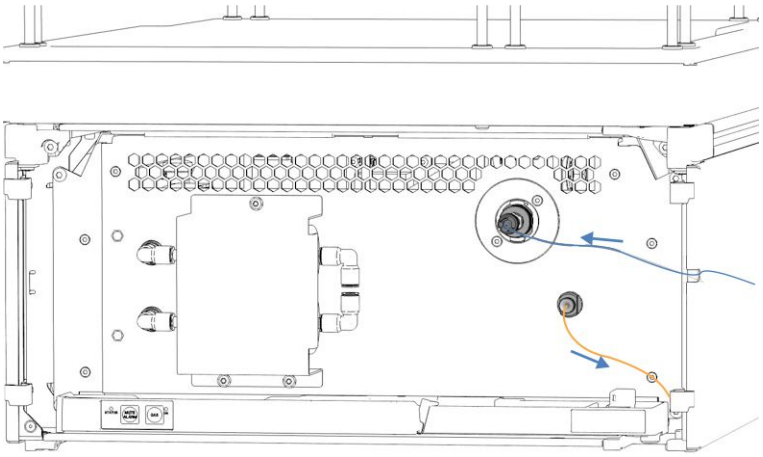

Figure 23: Inlet capillary and waste line connected in the detector

5.6.5.2 Connecting the Capillary Between Flow Cell and Nebulizer

If the charged aerosol detector is the second detector in the Vanquish system flow path, for example after the diode array detector, connect the capillary between flow cell and nebulizer.

Observe the following guidelines for series flow configuration:

- The charged aerosol detector must be the last detector connected in the flow path.
- Other detectors contribute to extra-column volume, which may have an adverse effect on the peak shape measured by the charged aerosol detector.
- *If the charged aerosol detector is the second detector in the Vanquish system after the diode array detector*
  Be aware of the backpressure limit of the LightPipe™ flow cell in the diode array detector. Connect the capillary from the flow cell directly to the nebulizer. Avoid connecting any additional components in the flow path between the two detectors. Refer to the *Operating Manual for the diode array detector*.
- If you want to bypass the flow cell, use the Viper union to interconnect the capillary from the column with the capillary connected to the nebulizer. Keep the capillary connection as short as possible to minimize peak dispersion.

Preparations

- See section 5.6.5, page 76.
- Observe all notes and specifications for the flow cell in the first detector in the Vanquish system. Refer to the *Operating Manual* for this detector.

Follow these steps

1. Connect the capillary from the column to the flow cell inlet. Refer to the instructions in the *Operating Manual* for the first detector in the Vanquish system flow path.
2. Route the connecting capillary from the flow cell outlet upward to charged aerosol detector.

3. On the leak tray of the charged aerosol detector, route the capillary through the capillary clip and secure it behind the clip.

   a) Pull the capillary clip carefully to the right to open the clip.

   b) Position the capillary behind the capillary clip.

   c) Carefully release the clip and take care not to clamp the capillary. The capillary must be secured behind the clip.

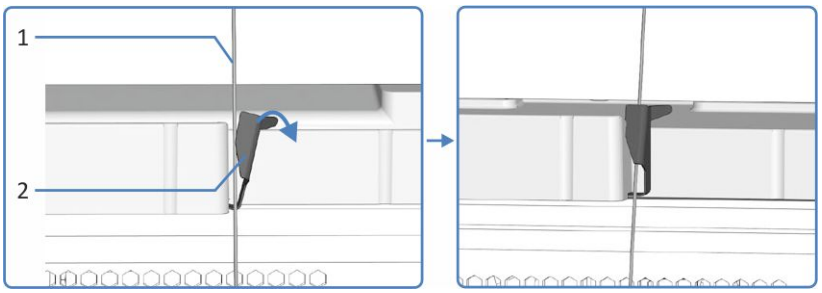

Figure 24: Securing the capillary behind the capillary clip on the leak tray

No.	Description	No.	Description
1	Capillary from the flow cell	2	Capillary clip

4. Connect the inlet capillary to the nebulizer.

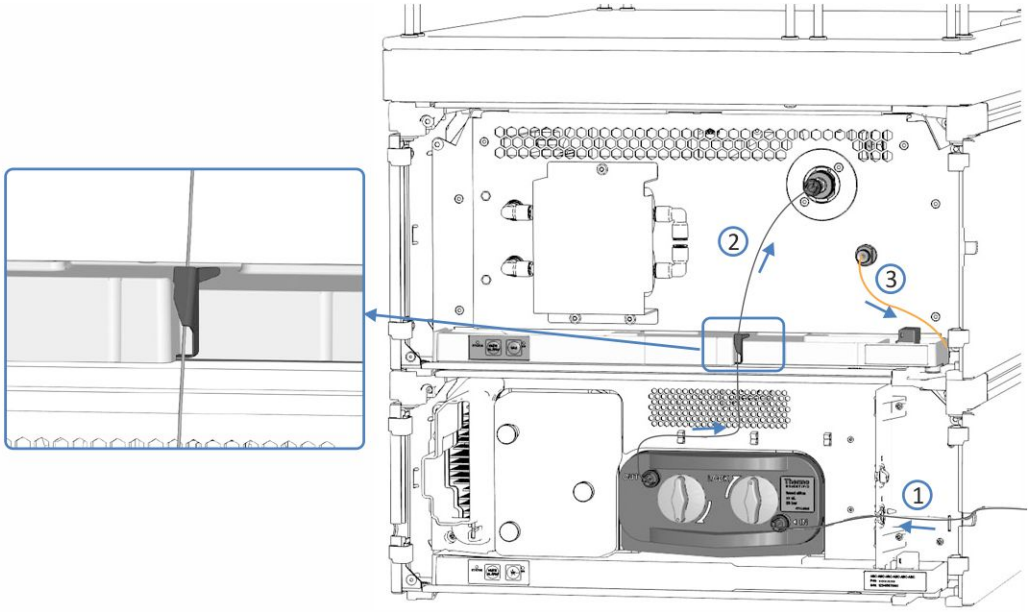

Figure 25: Series flow connection between diode array detector and charged aerosol detector (example)

No.	Description
1	Capillary connection from the column compartment to the flow cell
2	Capillary connection between flow cell and nebulizer
3	Waste line from the charged aerosol detector to the system base

5.6.6 Guiding Liquid Leaks to Waste

Leaking liquids of the detector are collected in the leak tray, where they flow off through the chase on the right side of the leak tray to the drain system.

For information about how the liquid is discharged to waste through the Vanquish drain system, refer to the *Vanquish System Operating Manual*.

5.7 Turning On the Detector

TIP Before turning on the power to a Vanquish system module for the first time, verify that the chromatography software is installed on the data system computer. When the power is turned on, the required USB drivers are automatically found and the Windows® operating system can detect the device.

To turn on the power to the detector, follow these steps:

1. Check that the power button on the front left of the Vanquish system base (system power button) is pressed in. If the power button stands out, press the power button to turn on the power on the system base.
2. Turn on the detector with its main power switch.

Turn the detector off with the main power switch, when instructed to do so, for example, during maintenance. Pressing the system power button will not be sufficient to turn off the power to the device completely.

For power on/off control during detector operation, see section 6.4, page 91.

NOTICE Make sure that the pump flow to the detector is turned off. To properly turn on the detector gas flow and *only then* turn on the pump flow to the detector, follow the instructions in section 6.5 Preparing the Detector for Operation, page 92.

5.8 Setting Up the Detector in the Software

This manual assumes that the chromatography software is already installed on the data system computer and a valid license is available.

For more information about setting up the *Vanquish system* in the software, refer to the *Vanquish System Operating Manual*.

The Help for the software that you are using provides detailed information about the settings on each property page.

6 Operation

This chapter describes the elements for detector control, provides information for routine operation and for shutdown.

6.1 Introduction to this Chapter

The information in this chapter assumes that the initial setup of the detector has already been completed. If this is not the case, refer to the instructions in chapter 5 Installation before proceeding (see page 45).

For a basic description of instrument control and automated sample analysis with the Chromeleon software, refer to the *Vanquish System Operating Manual*. Details on control and operation of the detector are available in the *Chromeleon Help*.

6.2 Safety Guidelines for Operation

When operating the detector, pay attention to the following safety guidelines:

Observe all warning messages and precautionary statements presented in section 2.3 Safety Precautions (see page 19).

CAUTION—Explosion Hazard or Damage to the Detector

When using tetrahydrofuran (THF), the use of air as supplied gas may pose an explosion hazard. This can pose a safety and health risk and damage the detector. Always use nitrogen with tetrahydrofuran or other highly combustible solvents.

NOTICE Pay attention also to the following guidelines:

- When operating the chromatography system, always set the lower pressure limit for the pump. This prevents damage resulting from leakage or from running the pump dry.
- If there is evidence of leakage in the detector, turn off the pump flow and remedy the situation immediately.
- Verify that the detector gas flow is turned on always before you turn on the pump flow to the detector. Do not direct pump flow to the detector without gas flow being turned on.
- *When turning on detector gas flow and pump flow*
  Turn on the detector gas flow first, wait at least 5 minutes and only then turn on the pump flow.
- *When turning off pump flow and detector gas flow*
  Turn off the pump flow first, wait at least 5 minutes and only then turn off the detector gas flow. During the waiting period, the drain pump drains any remaining mobile phase to waste before it automatically turns off.
- If the overpressure relief valve is releasing gas as a result of an overpressure in the detector during operation, turn off the detector immediately. Remedy the situation as described in the *Resolving Gas Supply Overpressure* section in this manual.

- Turn on the gas supply and detector gas flow only when the nebulizer is installed, the components in the gas flow path are properly connected, and the protective cover of the gas filter assembly is installed.
- Observe the requirements for gas supply and ventilation. See section 5.3 Site Requirements, page 49.
- Contamination of the mobile phase can damage the detector. Avoid contamination of the mobile phase. Follow the Mobile Phase Guidelines for the Detector in section 6.5.1, page 95.
- Operate the detector only within the allowed flow rate range. Exceeding the flow rate limit will damage the detector.
- Observe the specifications for operation. See section 9.1 Performance Specifications, page 164.

6.3 Control Elements

The detector is designed to be operated mainly from a computer running with the chromatography software.

In addition, the following elements are available on the detector:

- Keypad
  The keypad buttons allow you to perform certain functions directly from the detector.
- Status indicators
  The LEDs (Light Emitting Diodes) on the status indicator LED bar on the front side of the detector and the **STATUS** LED on the keypad provide a quick visual check of the operational status of the detector.

6.3.1 Keypad

The keypad inside the detector allows you to perform certain functions directly from the detector. When you press a button, a short beep confirms that the function is performed. When the detector is connected in the Chromeleon software, some functions may not be available from the keypad (see further down in this section).

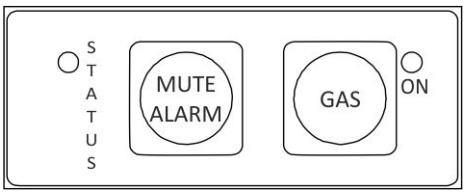

Figure 26: Keypad

STATUS

The **STATUS** LED provides a quick visual check of the operational status of the detector. When the doors are closed, the LED bar on the front side indicates the operational status.

For status details, see section 6.3.2, page 89.

MUTE ALARM

If beeping alerts you that the detector firmware detected a problem, for example leakage, beeping continues until you turn off the beep. Pressing this button turns off the beep for the current alarm. As a standard, beeping starts again after 10 minutes if the problem is still present or if the firmware detected another problem.

GAS

Pushing the **Gas** button will perform the following actions:

- Turn the detector gas flow on and off
- Turn the drain pump on and off
  After you pushed the button for turning off, the drain pump will remain enabled for a short period longer to remove any remaining mobile phase.

The LED next to the button indicates the gas status:

LED	Description
Off (dark)	The detector gas flow and drain pump are turned off.
Green	The detector gas flow and drain pump are turned on.

When the detector is connected in the Chromeleon software

The button functionality is as follows when the detector is connected in the Chromeleon software:

- No injection (sample) or sequence or baseline monitoring is running: All functions are available from the keypad.
- An injection (sample) or sequence or baseline monitoring is running: The **Mute Alarm** function remains available from the keypad, allowing you to turn off the beep for the current alarm.

6.3.2 Status Indicators

The status LED bar on the front side of the detector and the **STATUS** LED on the inside keypad provide information about the detector status.

LED Bar

The LED bar provides the information when the detector is closed. When the detector is connected in the Chromeleon software, the LED bar may provide less information.

LED Bar	Description
Off (dark)	The power to the detector is turned off.
Dimmed	The doors of the detector are open.
Yellow, flashing slowly	The power to the detector is turned on, but the detector is not connected in the Chromeleon software.
Yellow	The detector is connected in the Chromeleon software, but is not equilibrated. The detector gas flow and drain pump are turned off.
Green, flashing	The detector prepares for operation. This comprises the following phases: • The detector performs the self-test. • The detector is warming up. • The detector is equilibrating. In Chromeleon, if the setting is enabled that the evaporation temperature must be within a specified temperature range, the evaporation temperature is not yet within this range. For details on the setting, see section 6.6, page 100.
Green	The detector is equilibrated, but no data acquisition is running. The detector gas flow and drain pump are turned on.
Blue	An injection (sample) or sequence is running. No data acquisition is running.
Blue, running	Data acquisition is running.
Red	A problem or error has occurred. For the related message, check the Chromeleon Audit Trail. For remedial action, see the *Troubleshooting* section in this operating manual.

STATUS LED

The **STATUS** LED in the detector provides the following information:

STATUS LED	Description
Off (dark)	The power to the detector is turned off.
Green	The detector is functioning properly.
Red	A problem or error has occurred. For the related message, check the Chromeleon Audit Trail. For remedial action, see the *Troubleshooting* section.

For information about the LED that is present next to the **Gas** button on the keypad, see section 6.3.1 Keypad, page 87.

6.4 Power On/Off Control

The power switch on the detector is the main switch for power on/off control. The main power switch is turned on during initial installation of the detector.

For easier handling, you can use the power button on the front left of the Vanquish system base (system power button) for power on/off.

Observe the following:

- *All* modules in the Vanquish system that are connected to the system base via system interlink cables are turned on or off simultaneously when the system power button is pressed.
- When the power is on, the system power button is pressed in. When the power is off, the system power button stands out.
- If the main power switch on a device is off, you cannot turn on the device with the system power button.
- To turn off a device completely, you *have to* turn it off with the main power switch on the device. Pressing the system power button will not be sufficient to turn off the power to the device completely.

Upon power up, the detector performs a self-test. If the self-test is not successful, the status indicators are red and the detector is not ready for analysis. Check the Chromeleon Audit Trail for the related message and take appropriate remedial action.

After the self-test, a warm-up phase follows. During this phase, the detector monitors the temperature of the internal components. If the ambient temperature is cool or cold, the warm-up phase can take longer.

6.5 Preparing the Detector for Operation

This section gives information on any additional steps that are required to prepare the detector for operation and sample analysis.

Before Operating the Detector for the First Time

Prepare the detector for the first-time operation, observing the following:

NOTICE Flush the system flow path thoroughly before operating the detector for the first time:

- *Before connecting the charged aerosol detector to the system flow path*
  When you install devices or components to the system, always flush them to waste before connecting them in the system flow path. To flush the Vanquish modules, follow the instructions in the *Vanquish System Operating Manual*.
- *When the charged aerosol detector is connected in the system flow path*
  Flush the detector only when the detector gas flow is turned on. Deliver pump flow to the detector for flushing (see below).

- Before operating the detector, verify the nebulizer gas pressure setting. Set the nebulizer gas pressure as specified on the nebulizer certificate. Follow the instructions in section 6.5.2, page 98.
- To deliver pump flow to the charged aerosol detector, follow these steps:
  a) Turn on the detector gas flow. See section 6.5.3, page 99. The pump flow must be turned off. Wait at least 5 minutes before you continue.
  b) In Chromeleon, set the pump flow rate limit to the maximum flow rate specified for the charged aerosol detector.
  c) Turn on the pump flow to the detector. Have the pump deliver flow to the detector.
- Verify that any air bubbles are completely flushed out of the system flow path.

Before Starting Sample Analysis

Before starting an analysis:

- Make sure that the pump flow rate that is delivered to the charged aerosol detector is within the specified range. See section 9.1, page 164.
- To deliver pump flow to the charged aerosol detector, follow these steps:
  a) Turn on the detector gas flow. See section 6.5.3, page 99. The pump flow must be turned off. Wait at least 5 minutes before you continue.
  b) Turn on the pump flow to the detector. Have the pump deliver flow to the detector.
- Check the liquid level in the solvent reservoirs. Verify that the amount of solvent is sufficient for the analysis.
- Verify that the doors of the modules in the Vanquish system are closed.
- Make sure that the chromatography system is properly equilibrated. System equilibration should include the following operations:
  - Purging the pump (all channels)
  - Flushing the entire chromatography system with the starting solvent to rinse out any solvent from a previous analysis run
  - Warming up (or cooling down) all temperature-controlled devices in the system to the starting temperature Temperature-controlled devices can be, for example,
    - Column compartment and post-column cooler
    - Thermostatting in the autosampler
    - Flow cell in a fluorescence detector
    - Evaporation tube in a charged aerosol detector
  - Turning on the lamp (or lamps) in the UV/VIS detector
  - Monitoring the pump pressure and pressure ripple and checking that the pressure is stable and the ripple within reasonable limits for the application

- Monitoring the detector signal and checking whether the detector signal is stable so that the drift and signal noise are within reasonable limits for the application
- Performing an autozero of the detector baseline

TIP The Chromeleon software supports procedures for automatically starting a chromatography system in the software (**Smart Startup**). The startup procedure includes the operations for system equilibration. For details, refer to the *Chromeleon Help*.

6.5.1 Mobile Phase Guidelines for the Detector

CAUTION—Explosion Hazard or Damage to the Detector

When using tetrahydrofuran (THF), the use of air as supplied gas may pose an explosion hazard. This can pose a safety and health risk and damage the detector. Always use nitrogen with tetrahydrofuran or other highly combustible solvents.

NOTICE Inappropriate or contaminated mobile phase can damage the detector. The quality of the mobile phase significantly influences the performance of the detector. Observe the following guidelines to avoid damage to the detector.

General Guidelines

- Use only volatile mobile phases. All constituents, i.e. solvents and additives, of the mobile phase should be sufficiently volatile to allow evaporation under the conditions used.
- Non-volatile solutes in the mobile phase, even at trace amounts, produce a detector signal (background current, noise, drift). Minimize their concentration.

TIP A careful consideration in the selection of the mobile phase components will be helpful in minimizing the baseline noise and optimizing the performance during analysis.

Observe the following guidelines to minimize the concentration of non-volatile matter in the mobile phase:

- Prepare all mobile phases with volatile solvents and additives that have low residue after evaporation such as high-purity water, LC/MS-grade solvents and reagent-grade chemicals.

TIP Use water from an ultra-pure deionized source, as it typically has low conductivity and high resistivity.

- Avoid filtering the mobile phase. Filtration can increase the amount of detectable particulates within the mobile phase.
- With highly combustible mobile phases, such as tetrahydrofuran (THF) and other ethers and ketones, use nitrogen as supply gas.
- If a particular solvent or additive causes problems due to high residue after evaporation, try a different grade or vendor for the solvent.
- *When changing the operating mobile phase*
  Make sure that the solvents are miscible and that any buffer salts will not cause precipitation. If required, use an appropriate intermediate solvent.

  TIP Keep this in mind particularly when switching pump flow from other detectors to the Vanquish charged aerosol detector.

- Overview of typical compatible solvents for use with the detector:

Typical compatible solvents
Water
Methanol
Isopropanol
Acetonitrile
Acetone
Methylene chloride
Hexane
Chloroform
Tetrahydrofuran **NOTE:** Use with nitrogen gas only.

Guidelines for Additives

- Use only volatile additives for the mobile phase, such as pH modifiers, salts and ion pairing reagents.
- Acetic and formic acid and their corresponding ammonium salts are typically used to prepare volatile buffers.

- Use the lowest practical concentration of additive, especially those that typically have higher residue after evaporation, such as trifluoroacetic acid (TFA) and heptafluorobutyric acid (HFBA).
- Avoid using non-volatile buffers, such as those based on sulfate and phosphate.
- Overview of typical additives and buffers that can be used with the detector:

Additive/Buffer	pKa	Buffer range	Recommended max. concentration
Trifluoroacetic acid (TFA)	0.3	--	0.1%
Formic acid	3.75	2.8 – 4.8	0.3%
Ammonium formate			10 mM
Acetic acid	4.76	3.8 – 5.8	0.05 – 1%
Ammonium acetate			10 mM

- The stability of the mobile phase may decrease over time. Prepare mobile phases freshly on a daily basis.
- Select the evaporation temperature to optimize the evaporation of background residue from the mobile phase. See section 6.7.5, page 107.

NOTICE Long-term exposure of the detector to non-volatile mobile phases, such as inorganic buffers, will damage the detector. Do not use inorganic buffers.

- If the detector is inadvertently exposed to a non-volatile mobile phase, use water of LC/MS-grade or better as mobile phase to remove the salts from the detector.

6.5.2 Verifying the Nebulizer Gas Pressure

Before operating the detector, verify the nebulizer gas pressure setting.

NOTICE Operating the nebulizer with a gas pressure other than the pressure specified for this nebulizer can damage the nebulizer and the detector. After installation of the nebulizer, set the nebulizer gas pressure to the pressure that is specified for your nebulizer. The nebulizer gas pressure is defined on the gas pressure certificate that is shipped with the nebulizer.

1. In Chromeleon, open the **Command** window. Navigate to the **Gas Regulator Pressure Nominal** parameter.
2. Check if the gas pressure on the nebulizer certificate matches the nebulizer gas pressure set in the **Gas Regulator Pressure Nominal** parameter.
   If the nebulizer gas pressure deviates from the pressure on the nebulizer certificate, enter the gas pressure from the nebulizer certificate.
3. Close the **Command** window.
4. Monitor the **Gas Regulator Pressure** until it reaches the setpoint.

6.5.3 Turning On the Detector Gas Flow

Follow the instructions in this section to turn on the detector gas flow.

CAUTION—Escaping Gas

Gas can escape from open gas connections when the detector gas flow and/or the gas supply is turned on. The escaping gas can pose a health and safety risk.

Turn on the gas supply and detector gas flow only when the nebulizer is installed, the components in the gas flow path are properly connected, and the protective cover of the gas filter assembly is installed.

NOTICE—Detector Gas Flow and Pump Flow
Improper handling of detector gas flow and pump flow start and stop can damage the detector. Observe the respective order of steps:

- *When turning on detector gas flow and pump flow*
  Turn on the detector gas flow first, wait at least 5 minutes and only then turn on the pump flow.
- *When turning off pump flow and detector gas flow*
  Turn off the pump flow first, wait at least 5 minutes and only then turn off the detector gas flow. During the waiting period, the drain pump drains any remaining mobile phase to waste before it automatically turns off.

Preparations

1. Make sure that you observe the site requirements for the gas supply. See page 52.
2. Turn on the gas supply to the detector. Observe the *Gas specifications* for the gas supply pressure. See section 9.1 Performance Specifications, page 164.

Follow these steps

1. Turn on the gas flow in the detector using the **Gas** button on the keypad of the detector or using Chromeleon.
2. Close the detector doors.

6.6 Important Operating Parameters

The parameters described in this section should be considered for routine operation of the detector. You can usually access these parameters from the Chromeleon user interface. For more information, refer to *Chromeleon Help and documents*.

Parameters	Description
Signal channels	The signal channels are available for the detector in the Instrument Configuration Manager (Chromeleon 7) or Server Configuration program (Chromeleon 6.8).
CAD_1	The **CAD_1** signal channel is available for data acquisition. As a standard, the detector measures the current in **pA**.
Background current	Records and monitors the background current of the detector during data acquisition without autozero or filter constant applied. As a standard, the detector measures the current in **pA**. For further information, see section 6.7.4 Signal Channels, page 106.
Gas regulator pressure (signal channel)	Records and monitors the nebulizer pressure during data acquisition. The default unit setting for the gas pressure corresponds to the **Pressure Unit** that is defined on the detector configuration pages in the Chromeleon software. For further information, see section 6.7.4 Signal Channels, page 106.
Evaporation tube temperature	Records and monitors the actual temperature of the evaporation tube during data acquisition. The temperature is recorded in **°C** as a default. For further information, see section 6.7.4 Signal Channels, page 106.
Gas state	Turns the detector gas flow **On** or **Off**. Observe the notes in section 6.5.3 Turning On the Detector Gas Flow, page 99.
Autozero	Performs an automatic null balancing. The current detector signal is interpreted as 0 at the current range in use.

Parameters	Description
Gas regulator pressure	The default unit setting for the gas pressure corresponds to the **Pressure Unit** that is defined on the detector configuration pages in the Chromeleon software.
Gas regulator pressure nominal	Specifies the nebulizer gas pressure as specified on the certificate that was shipped with the nebulizer. Observe the notes in section 6.5.2 Verifying the Nebulizer Gas Pressure, page 98.
Gas regulator pressure	Displays the actual pressure of the gas supplied to the nebulizer. After you have set the nebulizer gas pressure, monitor the **GasRegPressure** parameter until it reaches the setpoint.
Gas regulation mode	Sets a specific nebulizer gas pressure for the analysis, based on the gas pressure specified for the nebulizer from the nebulizer certificate. As a standard, the **Analytical** mode is set.
	For VH-detector only: Two modes for regulating the nebulizer gas pressure in the detector are available: **Analytical** mode and **MicroLC** mode. For details on the gas regulation modes, see section 6.7.6 Gas Regulation Mode, page 109.
Peak width	Defines the width of a chromatographic peak at the half of the peak height. Specify a peak width for the narrowest expected peak in your chromatogram. As a standard, when you set the **Peak Width**, Chromeleon automatically calculates values for the **Data Collection Rate** and the **Filter Constant**.
Data collection rate	Defines the number of data points per second (Hz) that the Chromeleon software collects from the detector and stores as raw data. For further information, see section 6.7.3 Data Collection Rate and Filter Constant, page 104.
Filter constant	Applies a filter constant to the output current to electronically reduce the baseline noise during the analysis. For further information, see section 6.7.3 Data Collection Rate and Filter Constant, page 104.

Parameters	Description
Evaporator temperature control	Temperature control for the evaporation tube is enabled as a standard when the detector is shipped.
Evaporator temperature nominal	Specifies the setpoint for the evaporation temperature. As a standard, the **Evaporator Temperature Nominal** is set to 35 °C. For further information, see section 6.7.5 Evaporation Temperature, page 107.
Evaporator temperature	Displays the actual temperature of the evaporation tube. The actual temperature depends on several factors, including mobile phase composition and temperature, pump flow rate, gas temperature, and ambient temperature. As a standard, the temperature unit is **°C**.
Power function	Sets by what factor a linearization is applied to the data output. As a standard, the **Power Function** is set to **1.00**. For further information, see section 6.7.7 Power Function Value, page 109.
Leak detection	Leak detection is enabled as a standard when the detector is shipped (**Leak Sensor Mode = Enabled**). This is the preferred setting.

6.7 Optimizing the Performance of the Detector

This section provides information for best performance of the detector and gives hints on what you can do to optimize the performance further.

For information on the default parameters, see section 6.6 Important Operating Parameters, page 100.

6.7.1 General Guidelines

Consider the following guidelines for optimization of the detector performance:

- Consider the influences of the parameters on the detection (see section 6.7.2 Overview of Optimization Parameters, page 104).
- Ensure that the operating conditions are suitable. This includes:
  - Stable environmental conditions, such as a stable temperature
  - No air drafts
  - No vibrations or mechanical shocks caused by external sources
  - Stable backpressure and correct waste line setup
- Degas the solvent in the Vanquish pump.
- Monitor the usage of specific detector components that are subject to wear and stress and schedule appropriate maintenance intervals (see section 7.4.4 Predictive Performance, page 123).
- For guidelines and recommendations on the use of mobile phases with the charged aerosol detector, see section 6.5.1, page 95.
- Maintain the nitrogen or air source for your detector at regular intervals to ensure optimum performance. Observe the instructions in the *User Documentation for the nitrogen generator*.
- Use a dedicated column for each specific analysis to avoid cross-contamination of the column.
- Do not use a column that has been used with non-volatile mobile phases.
- Columns that are unstable and/or have a tendency to release particles from the column bed (i.e. "column bleed") will produce noise in the detector. Avoid such columns.

- When the mobile phase was stored over a period of time, high background current may be observed. Replace old mobile phase with freshly prepared mobile phase.
- If you use the detector for the analysis of complex biological samples, proper sample preparation is especially important.
- If you perform a gradient, it is recommended to perform blank injections with the desired method gradient profile prior to analysis. This "pre-conditioning" of the column improves the performance of both, the analytical column and the detector.

6.7.2 Overview of Optimization Parameters

The following table serves as an overview of parameters that influence the performance of the detector during data acquisition.

Parameter	Affects
Filter constant	Sensitivity, baseline noise
Evaporation temperature	Baseline noise, background current
Power function value	Linear range
Data collection rate	Peak resolution, disk space, possibly baseline noise

For further information about the parameters, refer to the *Chromeleon Help*.

6.7.3 Data Collection Rate and Filter Constant

The Chromeleon software automatically calculates the best data collection rate and filter constant, based on the value you enter for the peak width in the Instrument Method Wizard.

If you want to select a different data collection rate and filter constant, note the guidelines below.

Data Collection Rate

The data collection rate is the number of data points per second (Hz) that the Chromeleon software collects from the detector and stores as raw data.

When you select a data collection rate, observe the following guidelines:

- In general, each peak should be defined by at least 20 data points. For chromatograms with co-eluting peaks or low signal-to-noise ratios, 40 data points per peak are recommended.
- If all peaks are relatively wide, select a lower data collection rate (for example, 1.0 Hz). This saves disk space and allows for a faster display of data in the Chromeleon software.
- If the data collection rate is too low, the start points and end points of peaks will not be determined accurately.
- If any peaks of interest are less than a few seconds, select a higher data collection rate (10.0 Hz, for example). If the data collection rate is too high, data files may need more disk space and post-run analyses may require more processing time.
- Consider also the filter constant when setting the data collection rate. Set the two parameters together in order to optimize the amount of data points collected, and reduce short-term noise, while still maintaining peak height, symmetry, and resolution. See below.

Filter Constant

The filter constant is applied to the output current to electronically reduce the baseline noise during the analysis.

When setting a filter constant, observe the following:

- A small filter constant, such as 0.2 seconds, removes little baseline noise.
- A large filter constant, such as 10.0 seconds, smoothes the baseline significantly.

6.7.4 Signal Channels

The following signal channels are available for the detector:

- **CAD_1**
  The signal channel is available for data acquisition.
- **Background current**
  The signal channel displays the background current of the detector during data acquisition without autozero or filter constant applied.

  It is recommended to always record the background current signal channel.

  If a problem occurs, the information from the signal channel can provide helpful information to identify and eliminate the source for the problem.
- **Gas regulator pressure**
  The signal channel records and monitors the nebulizer gas pressure during data acquisition.

  It is recommended to record the signal channel for troubleshooting purposes.

  For proper gas pressure regulation, or if baseline noise or poor precision occurs, the information from the signal channel can provide helpful information to identify and eliminate the source for the problem.
- **Evaporation tube temperature**
  The signal channel records and monitors the actual temperature of the evaporation tube during data acquisition.

  It is recommended to always record the evaporation temperature signal channel for troubleshooting purposes.

  If a problem occurs, the information from the signal channel can provide helpful information to identify and eliminate the source for the problem.

6.7.5 Evaporation Temperature

The temperature-controlled evaporation tube dries the aerosol droplets that come from the spray chamber. The evaporation tube evaporates the more volatile components in the mobile phase to produce dried particles composed of non-volatile analyte and background residue.

The efficiency of the drying procedure depends on the set temperature. Additional factors, such as the mobile phase composition, the pump flow rate and the sample composition, also play an important role.

Note the following when selecting an evaporation temperature:

- As a standard, the **Evaporator Temperature Nominal** is set to 35 °C.
- When selecting a different evaporation temperature, observe the evaporation temperature specification for the detector. See section 9.1 Performance Specifications, page 164.
- Changes in the evaporation temperature affect the response of the detector.
- When the temperature was changed, the evaporation tube requires time to equilibrate. The **Wait For Temp Ready** parameter makes sure that the detector is only ready for analysis when the evaporation tube is equilibrated.
  If the parameter is disabled, it is recommended to wait approximately 30 minutes before you start sample analysis.

How to optimize the evaporation temperature

- Perform three or more injections of a reference standard for the analytical method for which you want to optimize the evaporation temperature.
- Use a different evaporation temperature setting for each reference injection, ranging from low to high temperature. Select the most appropriate setting as starting point. See the *Guidelines for selecting the evaporation temperature* below.

TIP Using performance metrics such as the precision and sensitivity of the detector can help to receive the optimal evaporation temperature.

Guidelines for selecting the evaporation temperature

The following guidelines are recommended for selecting an optimal evaporation temperature:

- In general, use the lowest evaporation temperature within the specified temperature range that provides acceptable limits of sensitivity.
- As a starting point, use an evaporation temperature of 35 °C.
- Higher evaporation temperature settings can be used when analytes of interest have low volatility, relative to the background. Since the volatility of background residue is typically unknown, experimentation is required for optimizing this parameter for a given method.
- Perform screening runs at two evaporation temperature settings.
  - With the VH-detector, use a minimum of two evaporation temperatures. Typically, 35 °C and 40 °C are appropriate if the temperature range is unknown. If required, perform additional tests in a maximum of 5 °C increments.
  - With the VF-detector, use two evaporation temperatures, depending on whether the temperature range is known. If the temperature range is unknown, 35 °C and 50 °C is an appropriate starting point for screening runs.
- Consider that higher evaporation temperature settings may inadvertently reduce response for low-analyte levels, even if they are considered as a non-volatile analytes.
- Remember to check the limits of sensitivity by actual analysis of low-level standards. Also, check the analyte signal reproducibility at each evaporation temperature setting.
- For detection of semi-volatile analytes, you can use lower evaporation temperature settings. However, this may lead to higher background levels and noise.

NOTICE Do not use non-volatile modifiers, such as sodium phosphate. Observe the Mobile Phase Guidelines for the Detector in section 6.5.1, page 95.

6.7.6 Gas Regulation Mode (VH-Detector only)

This section applies only to the VH-detector.

The detector provides two gas regulation modes to optimize the efficiency of the nebulizer: Analytical mode and MicroLC mode. Each mode sets a specific nebulizer gas pressure for the analysis, based on the gas pressure specified for the nebulizer from the nebulizer certificate.

To select the gas regulation mode for your application, note the following:

- *Analytical mode*
  - The pressure for the gas regulator is set to the nebulizer gas pressure setting as defined on the nebulizer certificate.
  - For use with high pump flow rates within the pump flow range allowed for the detector
  - This mode is set as a default in Chromeleon.
- *MicroLC mode*
  - The nebulizer gas pressure setting is automatically reduced by a fixed fraction of the nebulizer pressure.
  - This mode optimizes the nebulizer gas pressure for certain pump flow rates and certain types of mobile phase compositions.
  - For use with very low pump flow rates within the pump flow range allowed for the detector

TIP The resulting nebulizer gas pressure will be below the gas pressure specified in the nebulizer certificate (for example, below 55 psi or 3.8 bar or 379 kPa).

6.7.7 Power Function Value

The signal of the detector has a wide dynamic range with over four orders of magnitude. The nature of the response is inherently nonlinear.

The *Power Function Value* (PFV) applies a power transformation to the data output of the detector. Power transformations can improve the linearity of response over a given range of interest.

The transformation is applied to the data output in real time. The data output is raised to the selected power.

As a standard, the **Power Function** is set to 1.0. For most applications and compounds, this is a good universal setting.

Guidelines for selecting a power function value

To optimize the power function value, observe the following guidelines:

- An optimal power function value improves the linearity of response over a given range of interest.
- Selecting the optimal value depends primarily on the analysis conditions and the desired range of quantitation.

6.7.8 Baseline Noise

Baseline noise can originate from many factors. To minimize the baseline noise, observe the following:

- The quality of the mobile phase has a major impact on the performance of the detector. Only use mobile phases of the highest quality available. Keep impurities and contaminants to a minimum. Follow the Mobile Phase Guidelines for the Detector in section 6.5.1, page 95.
- Flush the system modules at regular intervals to remove any non-volatile residues from the mobile phase, if applicable.
- Follow the maintenance schedules to keep the system modules in optimum performance state.
- Keep the supplied gas in optimum quality for the detector.

6.8 Shutting Down the Detector

If the detector will not be operated for some time, follow the instructions on shutting down the detector in this section.

TIP The Chromeleon software provides procedures for automatically preparing the chromatography system for shutdown. The procedures include, for example, operations for reducing the flow rate, reducing the temperature in temperature-controlled devices, and turning off the detector lamps.
For information about **Smart Shutdown** and **Smart Standby**, refer to the *Chromeleon Help*.

6.8.1 Short-Term Shutdown (Interruption of Operation)

To interrupt operation of the detector for a short period (short-term shutdown), for example, overnight, observe these guidelines for the Vanquish system modules, as required by your system arrangement:

- For your Vanquish detector, note the following:
  - *Charged aerosol detector:*
    Check that sufficient gas is available to continue gas flowing through the detector. This is to prevent any build-up of residue from solvents or analytes. Gas must be flowing when pump flow is delivered to the detector.
  - *UV/VIS detector:*
    The lamp(s) in the detector can remain turned on and the shutter in the light path before the flow cell can be closed.
  - *Fluorescence detector:*
    Turn off temperature control for the flow cell.
- Apply a flow of 0.05 mL/min and have the pump deliver an appropriate solvent.
  Check the lower pressure limit for the pump and adapt the value if necessary. If the pressure falls below the lower limit, the pump stops the flow.
- Set the injection valve in the autosampler to the Inject position.
- Make sure that the temperature of the column does not exceed 40 °C.

When resuming operation, let the flow equilibrate and verify that the operating parameters for the other system modules are set as required before proceeding.

6.8.2 Long-Term Shutdown

Shutting Down the Detector

NOTICE

Observe the following to avoid damage to the charged aerosol detector:

- Always flush the detector with an appropriate pure solvent before interrupting operation. Follow the steps below.
- Avoid leaving the detector exposed to highly acidic or basic mobile phases for long periods.
- If the detector was operated with organic solvents in high concentration that may form peroxides upon evaporation, such as un-stabilized tetrahydrofuran or isopropanol, flush the detector with LC/MS-grade water before shutdown.

TIP Shutting down the detector affects the operation of the system. When shutting down the detector, also observe the shutting down instructions for the other Vanquish system modules and take appropriate action (refer to the *Operating Manuals* for the modules).

To interrupt operation for a longer period, follow the instructions below.

1. Flush the system with an appropriate, pure solvent (minimum LC/MS-grade). Make sure that residual sample components, impurities from the column, or buffers are completely removed from the detector.

   Observe the following:

   - *Detector remains in the laboratory after shutdown*
     - If no buffer solution is used, flush the system, for example with methanol. 100% acetonitrile should not be used.
     - If a buffer solution is used, flush the system with several volumes (for example, 1.0 mL/min for 10 minutes with the standard system) of methanol and water (50:50) to prevent salt buildup in the fluidics. If the solvents in the detector are not miscible with water, use an appropriate intermediate solvent.

- *Detector shall be transported or shipped after shutdown*
  - If no buffer solution is used, flush the system with isopropanol.
  - If a buffer solution is used, flush the system first with several volumes (for example, 1.0 mL/min for 10 minutes with the standard system) of methanol and water (50:50) to prevent salt buildup in the fluidics. If the solvents in the detector are not miscible with water, use an appropriate intermediate solvent. Afterward, flush the system with isopropanol.

TIP As an intermediate solvent, you can use 100% methanol to flush the charged aerosol detector.

2. Turn off the pump flow and then the gas flow:

   a) Turn off the pump flow to the detector. Wait at least 5 minutes. During the waiting period, the detector drains any remaining mobile phase to waste.

   b) Turn off the gas flow on the detector.

   c) Wait until the system pressure is down to zero before you continue.

   d) Turn off the gas supply to the detector.

3. The step depends as follows:

   - *Detector and all other system modules remain in the system stack and are to be turned off*
     Turn off the system with the system power button on the system base.
   - *Detector shall be transported or shipped after shutdown*
     If one of the modules shall be removed from the system stack, turn off *all* system modules with their main power switch. Pressing the system power button will not be sufficient to turn off the power to the devices completely.

     Follow the instructions in section 7.12 Transporting or Shipping the Detector, page 142.

Restarting the Detector

To restart the detector, follow these steps:

1. Prepare and restart the other modules in the Vanquish system, following the instructions in the *Operating Manuals* for the modules. Pay special attention to the *Preparing the Module for Operation* section.
2. Flush the components in the flow path before the detector before you connect the detector to the system flow path.
3. Turn on the detector. Observe the following:
   - *If the detector remained in the system stack and all system modules were turned off*
     Turn on the system with the system power button on the system base. See section 6.4, page 91.
   - *If the detector is restarted after transport*
     Turn on the detector with the main power switch. See section 5.7, page 81.
4. Before starting an analysis, let the detector equilibrate and be sure that it is ready for operation (see section 6.5 Preparing the Detector for Operation, page 92).

7 Maintenance and Service

This chapter describes the routine maintenance and the service procedures that the user may perform.

7.1 Introduction to Maintenance and Service

This chapter describes the routine maintenance and service and repair procedures that the user may perform.

Additional maintenance or service procedures must be performed only by service personnel certified by Thermo Fisher Scientific (for brevity, referred to as Thermo Fisher Scientific service personnel).

The detector is designed for easy maintenance and service. The user-serviceable parts of the detector can be accessed from the front. If not stated otherwise, the maintenance procedures do not require that you remove the detector from the system.

The maintenance procedures do not require that you remove the doors. However, it is possible to remove a door if this should ever be required for a specific reason or procedure. If you need to remove a door, follow the related steps in section 7.11 Replacing the Doors, page 140.

7.2 Safety Guidelines for Maintenance and Service

When performing maintenance or service procedures, pay attention to the following safety guidelines:

Observe all warning messages and precautionary statements presented in section 2.3 Safety Precautions, page 19.

WARNING—High Voltage

High voltages are present inside the detector that could cause an electric shock. Do not open the housing or remove protective panels unless specifically instructed to do so in this manual.

WARNING—Escape of Hazardous Substances from Flow Connections

Flow and capillary connections can be filled with substances that can pose health risks. Solvent can spray when capillaries burst, slip out of their fittings, or are not properly tightened or when capillary connections are otherwise open.

- Wear appropriate protective equipment and follow good laboratory practice.
- Before starting maintenance or repair procedures, flush out harmful substances with an appropriate solvent.

CAUTION—Spraying Solvent

Solvents can spray when under high pressure.

- Stop the pump flow prior to opening the flow path.
- Wait until the system pressure is down to zero.
- When opening the flow path, wear appropriate protective equipment.

CAUTION—Hydrostatic Pressure

Solvent may spill when you open the flow path during pump operation. This is due to hydrostatic pressure in the system when the solvent reservoirs are located above the pump outlet.

Before you loosen a connection in the low-pressure flow path, turn off the pump flow and wait until the system pressure is down to zero. Unscrew the caps of the solvent reservoirs and remove the solvent lines together with the caps from the reservoirs. Empty the solvents lines. Retighten the reservoir caps.

NOTICE—Detector Gas Flow and Pump Flow
Improper handling of detector gas flow and pump flow start and stop can damage the detector. Observe the respective order of steps:

- *When turning on detector gas flow and pump flow*
  Turn on the detector gas flow first, wait at least 5 minutes and only then turn on the pump flow.
- *When turning off pump flow and detector gas flow*
  Turn off the pump flow first, wait at least 5 minutes and only then turn off the detector gas flow. During the waiting period, the drain pump drains any remaining mobile phase to waste before it automatically turns off.

7.3 General Rules for Maintenance and Service

For successful maintenance and service procedures, follow these rules and recommendations:

- Before starting maintenance or service procedures, shut down the detector when instructed to do so.
- Use only the replacement parts specifically authorized and qualified for the detector by Thermo Fisher Scientific. For ordering information, see section 10.4 Consumables and Replacement Parts, page 171.
- Follow all instructions step by step and use the tools recommended for the procedure.
- Before opening the flow path to replace capillaries in the system, turn off the pump flow and wait until the system pressure is down to zero.
- Dirty components can contaminate the chromatography system. Contamination leads to poor performance of the modules and entire system or can even cause damage to the modules and system. Therefore:
    - Always wear appropriate gloves.
    - Place the components only on a clean, lint-free surface.
    - Keep your tools clean.
    - Use only lint-free cloth for cleaning.
- If you need to return the detector for depot repair, follow the instructions in section 7.12 Transporting or Shipping the Detector, page 142.

7.4 Routine and Preventive Maintenance

Optimum detector performance, maximum uptime of the detector, and accurate results can be obtained only if the detector is in good condition and properly maintained.

7.4.1 Maintenance Plan

Perform the maintenance procedures in the table on a regular basis. The frequency given in the table is a suggestion. The optimum frequency for maintenance depends on several factors, such as the types and amounts of samples and solvents used with the detector.

Frequency	What you should do...
Daily	Inspect the flow connections for signs of leakage or blockage.
	When using buffer solutions, flush the detector thoroughly after use with an appropriate solvent that does not contain buffers or salts.
	The stability of the mobile phase may decrease over time. Prepare mobile phases freshly on a daily basis.
Regularly	Inspect the flow connections for damage, such as cracks, nicks, cuts, or blockage.
	Check that all warning labels are still present on the detector and clearly legible. If they are not, contact Thermo Fisher Scientific for replacement.
Annually	Have Thermo Fisher Scientific service personnel perform preventive maintenance once a year.

TIP Chromeleon supports functions for estimating the lifetime of consumables (see section 7.4.4 Predictive Performance, page 123).

7.4.2 Flushing the Detector Between Analyses

Observe the following guidelines to prevent build-up or accumulation of residue from the mobile phase, sample matrix and analytes within the detector between the analyses. This helps maintain consistent response, optimum performance and reduced detector downtime:

- Periodically flush the detector with the detector gas flow being turned on. When using buffer solutions and other additives, it is recommended to flush the detector daily using compatible solvents that do not contain additives.
- Use the solvent with the best solubility characteristics for the sample matrix and analyte(s) of the analytical method in question.
- If flushing is done with a stronger solvent that used for your method, disconnect the detector from the system flow path first and flush the system to waste (for example, with 20 column volumes). Then reconnect the detector to the system flow path, turn on the gas flow and repeat the flushing.
- Use an evaporation temperature setting of 35 °C when flushing the detector.

To continue with an analysis, prepare the detector following the guidelines under *Before Starting Sample Analysis* (see section 6.5, page 92).

7.4.3 Cleaning or Decontaminating the Detector

Cleaning and decontamination must be performed by qualified personnel wearing suitable personal protective equipment. Always observe national and local regulations.

NOTICE Wipe up all liquids spilled onto the system immediately. If surfaces are exposed for longer periods, these liquids can cause damage.

Decontamination

Decontamination is required, for example, when leakage or spillage has occurred, or before service or transport of the detector. Use a suitable cleaning detergent or disinfectant to ensure that the treatment renders the detector safe to handle.

Parts required

- Suitable cleaning detergent (or disinfectant)
- Purified water
- Lint-free cloths or wipes

CAUTION—Explosive Gas Mixtures from Alcoholic Cleaning Detergents

Alcohol-containing cleaning detergents may form flammable and explosive gas mixtures when exposed to air.

- Use such cleaning detergents only when required and only in adequately ventilated rooms.
- Avoid open flames or exposure to excessive heat during the cleaning process.
- Wipe the cleaned components thoroughly dry after cleaning. Do not operate the detector before it is completely dry.

NOTICE Observe the following:

- Only use cleaning detergents that will not damage the surfaces of the system.
- Never use sharp tools or brushes for cleaning any surfaces.
- Do not use sprays for cleaning.
- Prevent cleaning detergent from entering the flow path.
- Do not use excessively wetted cloth or wipes for cleaning. Prevent any liquids from entering the functional components of the detector. Liquids can cause a short circuit when getting in contact with the electronic components.

Preparations

Turn off the power to the detector and disconnect the power cord from the power source.

Follow these steps

1. Wipe the surfaces clean with a clean, dry, soft, lint-free cloth or wipe. If necessary, slightly dampen the cloth or wipe with a solution of lukewarm water and a suitable cleaning detergent.
2. Allow the cleaning detergent to react as recommended by the manufacturer.
3. Wipe the cleaned surfaces with purified water to ensure that all cleaning detergent residues have been removed.
4. Wipe the surfaces dry using a soft, lint-free cloth or wipe.

7.4.4 Predictive Performance

The Chromeleon software supports functions for estimating the lifetime of consumables and for monitoring and recording service and qualification information about the device. These functions, which are called Predictive Performance, allow you to schedule maintenance procedures based on the actual operating and usage conditions of the device.

On special wellness, service, and qualification panels, you can define intervals for replacing components that are subject to wear or stress and for service procedures or qualification procedures. In addition, you can set limits to alert you before and when the replacement, service, or qualification is due. Color-coded bars on special panels provide visual feedback, allowing you to easily check and monitor the status. If a warning limit was set, a message in the Chromeleon Audit Trail alerts you when the action is due.

Some counters can be reset to zero after the required action was performed. To keep the Predictive Performance information up-to-date, consider resetting the counter when a maintenance, service, or qualification procedure has been performed.

For more information, refer to the *Chromeleon Help*.

The list shows the most important Predictive Performance counters for the detector. Consider resetting these parameters after performing the related maintenance procedure:

- FilterDone
  If you have replaced the gas filter assembly, consider resetting this counter after replacement of the gas filter assembly.
- QualificationDone
- ServiceDone

7.5 Disconnecting the Gas Inlet and Exhaust Tubes

CAUTION—Escaping Gas

Gas can escape from open gas connections when the detector gas flow and/or the gas supply is turned on. The escaping gas can pose a health and safety risk.

Make sure that the detector gas flow and the gas supply are turned off before you remove the nebulizer, disconnect the gas tubes or remove the gas filter assembly from the detector.

Turn on the gas supply and detector gas flow only when the nebulizer is installed, the components in the gas flow path are properly connected, and the protective cover of the gas filter assembly is installed.

Parts and tools required

Only required if gas tubing is to be replaced

- For replacement of the gas inlet tubing:
  - Gas inlet elbow connector
  - Gas inlet tubing
- For replacement of the gas exhaust tubing:
  - Gas exhaust elbow connector
  - Gas exhaust tubing
- Tubing cutter (optional)

Preparations

1. Flush the detector with the detector gas flow being turned on. For recommendations on flushing the detector, see section 7.4.2 Flushing the Detector Between Analyses, page 121.
2. Turn off the pump flow and then the gas flow:
   a) Turn off the pump flow to the detector. Wait at least 5 minutes. During the waiting period, the detector drains any remaining mobile phase to waste.
   b) Turn off the gas flow on the detector.

c) Wait until the system pressure is down to zero before you continue.

d) Turn off the gas supply to the detector.

3. Turn off the detector with the main power switch.

Follow these steps

On the gas port on the detector, disconnect the elbow connectors of the gas tubes from the port.

To re-install the gas tubes or install new gas tubes, follow the steps in section 5.5.4 Connecting the Gas Inlet and Exhaust Tubes, page 67.

7.6 Disconnecting the Waste Line

Parts and tools required

- *If no new waste line is to be installed*
  Seal plug for the waste outlet
- *If the waste line is to be replaced*
  - Replacement waste line
  - Tubing cutter (optional)

Preparations

1. Flush the detector with the detector gas flow being turned on. For recommendations on flushing the detector, see section 7.4.2 Flushing the Detector Between Analyses, page 121.
2. Turn off the pump flow and then the gas flow:
   a) Turn off the pump flow to the detector. Wait at least 5 minutes. During the waiting period, the detector drains any remaining mobile phase to waste.
   b) Turn off the gas flow on the detector.
   c) Wait until the system pressure is down to zero before you continue.
   d) Turn off the gas supply to the detector.
3. Turn off the detector with the main power switch.

Follow these steps

1. On the waste outlet on the front of the detector, disconnect the waste line.
2. Proceed as required:
   - *If no new waste line is to be installed*
     Close the waste outlet with the seal plug.
   - *If the waste line is to be replaced*
     Follow the steps in section 5.6.4 Connecting the Waste Line, page 75.

7.7 Removing the Nebulizer

CAUTION—Sharp Tip of Nebulizer Capillary

The fused-silica capillary inside the nebulizer protrudes from the nebulizer tip. The nebulizer capillary is fragile and sharp and can cause personal injury and damage to the capillary. To avoid personal injury, always wear safety glasses when handling the nebulizer. Do not touch the nebulizer tip. Handle the nebulizer with care.

CAUTION—Escaping Gas

Gas can escape from open gas connections when the detector gas flow and/or the gas supply is turned on. The escaping gas can pose a health and safety risk.

Make sure that the detector gas flow and the gas supply are turned off before you remove the nebulizer, disconnect the gas tubes or remove the gas filter assembly from the detector.

Turn on the gas supply and detector gas flow only when the nebulizer is installed, the components in the gas flow path are properly connected, and the protective cover of the gas filter assembly is installed.

NOTICE The nebulizer is highly sensitive to contamination. Even minute particles on the nebulizer can lead to contamination and poor detector performance. Always wear clean-room gloves when you install or remove the nebulizer.

Preparations

1. Flush the detector with the detector gas flow being turned on. For recommendations on flushing the detector, see section 7.4.2 Flushing the Detector Between Analyses, page 121.

2. Turn off the pump flow and then the gas flow:

   a) Turn off the pump flow to the detector. Wait at least 5 minutes. During the waiting period, the detector drains any remaining mobile phase to waste.

   b) Turn off the gas flow on the detector.

   c) Wait until the system pressure is down to zero before you continue.

   d) Turn off the gas supply to the detector.

3. Turn off the detector with the main power switch.

4. Disconnect the inlet capillary from the nebulizer.

Follow these steps

1. Turn the nebulizer by 90 degrees counter-clockwise in the opening until it releases from the two locking points.
   Mind the correct orientation of the nebulizer when it is unlocked: The gripping surfaces are positioned on the top and bottom side of the handle. The locks for attachment are positioned on the left and right side of the handle.

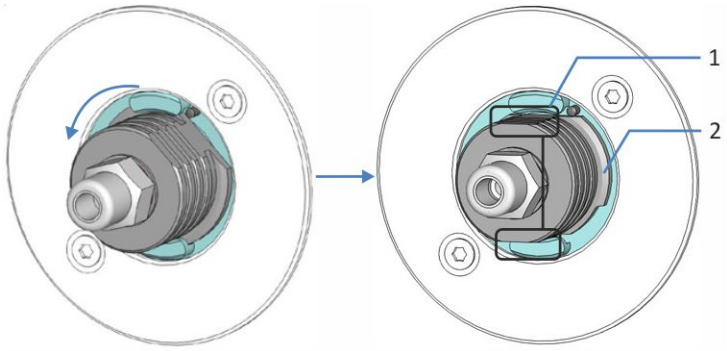

Figure 27: Unlocking the nebulizer

No.	Description
1	Gripping surfaces on the top and bottom side
2	Locks for the nebulizer on the left and right side

2. Pull the nebulizer straight out of the opening. Avoid the nebulizer tip from touching the sides of the nebulizer opening, as this can damage the tip.

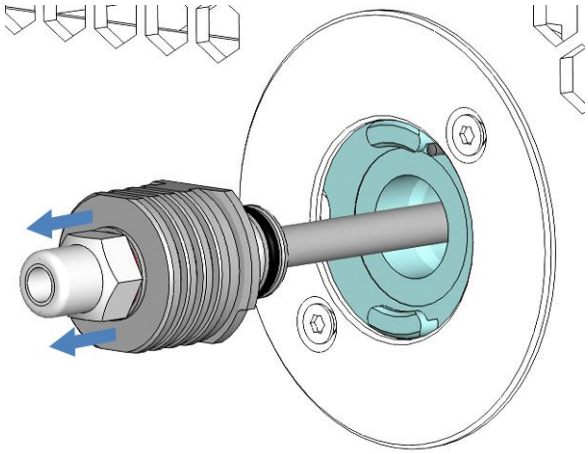

Figure 28: Removing the nebulizer

3. Install the dust seal plug to the opening for the nebulizer.

4. *If the nebulizer is to be transported*
   Pack the nebulizer:

   a) Carefully install the protective tubing to the nebulizer spray pipe. Do not to touch the nebulizer tip with the protective tubing, as it can damage the tip.

   b) Install the plug to the nebulizer inlet.

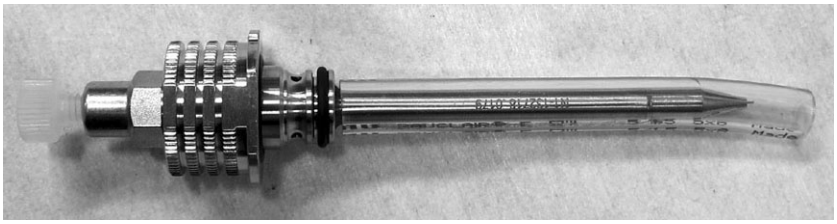

Figure 29: Nebulizer with protective tubing and inlet plug

   c) Pack the nebulizer in its original packaging that it was shipped in.

To re-install the nebulizer, follow the instructions in section 5.5.3, page 62.

7.8 Replacing the Gas Filter Assembly

CAUTION—Gas Filter Rupture upon Excessive Gas Supply Pressure

An excessive supply gas pressure can lead to an overpressure in the detector and cause the gas filters to rupture. This can pose a health and safety risk.

- Turn on the gas supply only when the gas filters are properly connected to the detector and the protective cover is properly installed.
- Observe the gas supply pressure range that is specified for the detector. Do not exceed the maximum gas supply pressure.
- Before you start the replacement of the gas filter assembly, make sure that the gas supply and the detector gas flow are turned off.

CAUTION—Escaping Gas

Gas can escape from open gas connections when the detector gas flow and/or the gas supply is turned on. The escaping gas can pose a health and safety risk.

Make sure that the detector gas flow and the gas supply are turned off before you remove the nebulizer, disconnect the gas tubes or remove the gas filter assembly from the detector.

Turn on the gas supply and detector gas flow only when the nebulizer is installed, the components in the gas flow path are properly connected, and the protective cover of the gas filter assembly is installed.

When

Interval for gas filter replacement has expired

Parts required

Gas filter assembly consisting of a charcoal gas filter and a HEPA gas filter

Tools required

- Screwdriver, Torx T10
- Multitool

Preparations

1. Flush the detector with the detector gas flow being turned on. For recommendations on flushing the detector, see section 7.4.2 Flushing the Detector Between Analyses, page 121.

2. Turn off the pump flow and then the gas flow:

   a) Turn off the pump flow to the detector. Wait at least 5 minutes. During the waiting period, the detector drains any remaining mobile phase to waste.

   b) Turn off the gas flow on the detector.

   c) Wait until the system pressure is down to zero before you continue.

   d) Turn off the gas supply to the detector.

3. Turn off the detector with the main power switch.

Follow these steps

1. With the screwdriver, loosen and remove the top screw on the protective cover for the gas filter assembly.

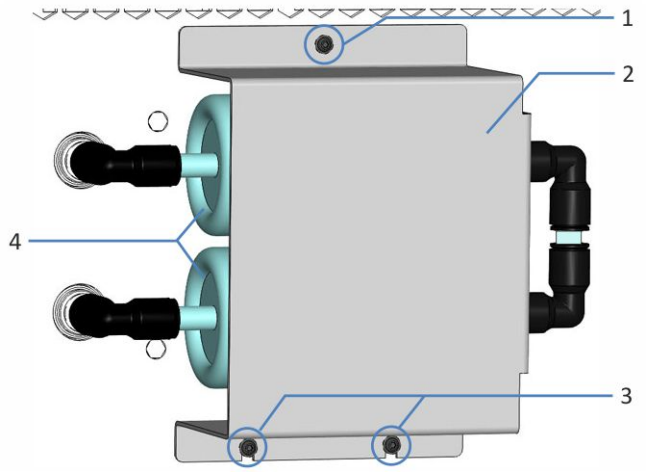

No.	Description
1	Top screw on protective cover
2	Protective cover
3	Bottom screws (slightly loosened)
4	Gas filters

Figure 30: Gas filter assembly with protective cover

2. Slightly loosen the two bottom screws on the protective cover. Leave the two screws attached loosely in the bores. Do not remove the screws.

3. Push the protective cover upward to release it from the two bottom screws (no. 1 in Figure 31). Lift the protective cover away from the front panel (no. 2 in Figure 31).

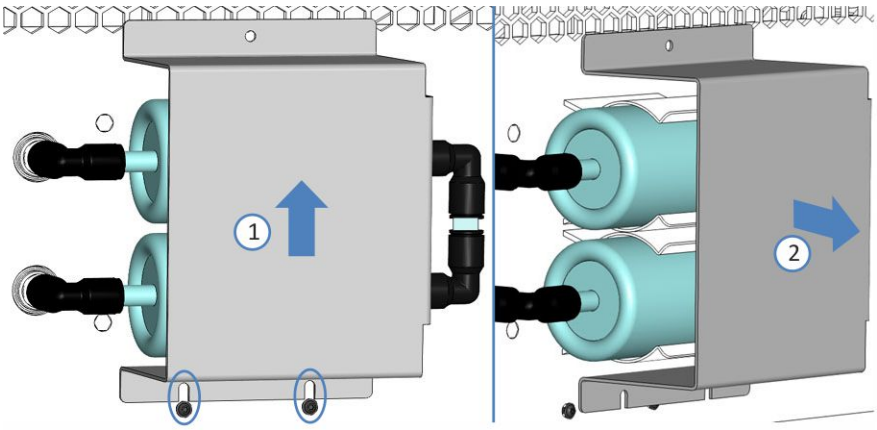

Figure 31: Removing the protective cover

The gas filters are uncovered now:

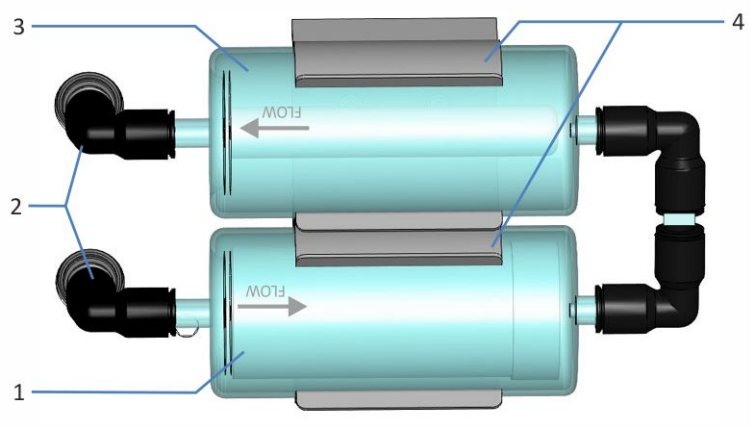

Figure 32: Gas filter assembly

No.	Description	No.	Description
1	Charcoal gas filter	3	HEPA gas filter
2	Elbow fittings	4	Gas filter clamps

4. Disconnect the gas filter assembly from the gas connectors on the detector:

   a) On the two (push-in) elbow fittings on the detector gas connectors, push in the locking ring on each elbow fitting with the multitool (no. 1 in Figure 33 on page 134). Leave the elbow fittings connected to the gas filter assembly.

b) Pull the two elbow fittings off from the gas connectors on the detector (no. 2 in Figure 33).

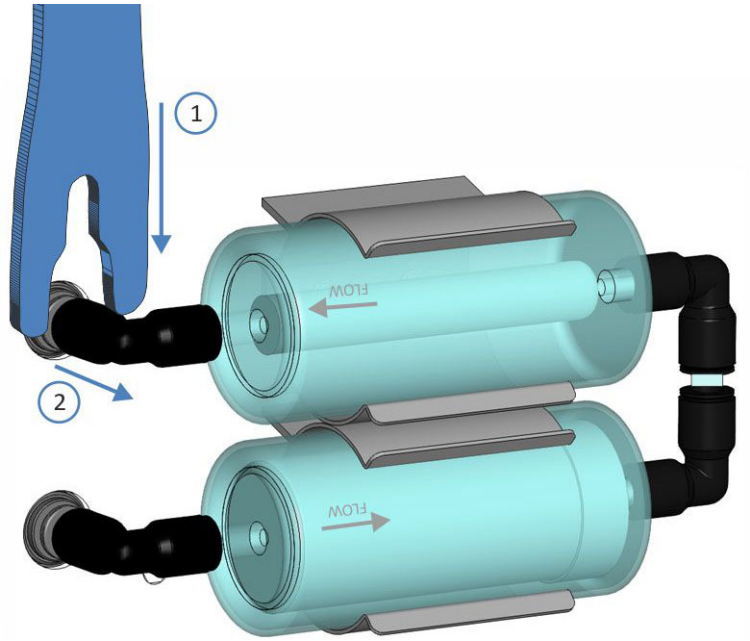

Figure 33: Unlocking an elbow fitting with the multitool

5. Pull the gas filter assembly out of the clamps.

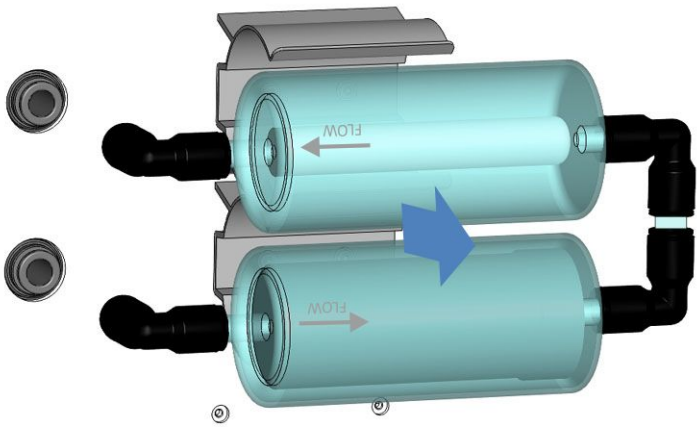

Figure 34: Pulling the gas filter assembly out of the clamps

6. With the new gas filter assembly, mind the correct orientation for the gas flow for installation. Observe the flow direction signs on the filters.

   - The bottom gas filter must be the charcoal gas filter (thick black inner filter cylinder; no. 2 in Figure 35 on page 135).

- The top gas filter must be the HEPA gas filter (thin white inner filter cylinder; no. 1 in Figure 35).

7. Push the new gas filter assembly into the clamps observing the orientation signs for the gas flow on the gas filters. See Figure 35.

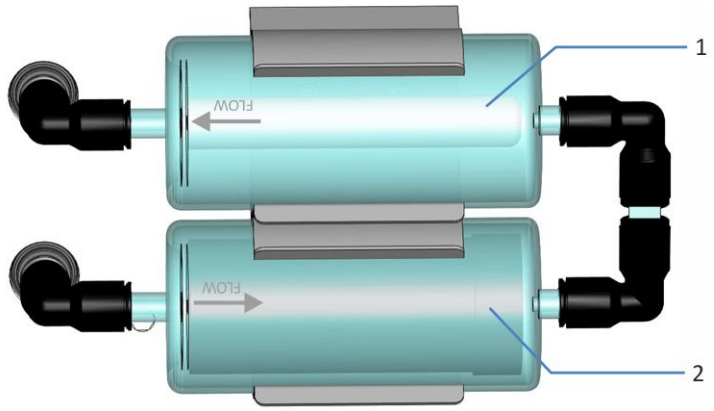

Figure 35: Correct orientation of the gas filter assembly

No.	Description
1	HEPA gas filter
2	Charcoal gas filter

8. Push the (push-in) elbow fittings into the gas connectors on the detector. Check that the connections are secure: Slightly pull on the fittings. If a fitting slides out, repeat this step.

9. Install the protective cover: Hold the protective cover onto the interior panel. Slide it downward carefully so that the bottom screws match the recesses.

10. With the screwdriver, tighten the three screws on the protective cover.

11. Turn on the detector with its main power switch.

12. In Chromeleon, consider updating the Predictive Performance information for the gas filter assembly.

13. Turn on the gas flow. See section 6.5.3 Turning On the Detector Gas Flow, page 99.

7.9 Replacing the Main Power Fuses

When

Blown fuses

Parts required

Replacement fuses (2 fuses, 3.15AT, 250 V AC, slow-blow, 5 x 20 mm)

Tools required

Slotted screwdriver, any size between 3.3 mm and 5.5 mm is appropriate

Preparations

WARNING—Electric Shock

High voltages are present inside the detector that could cause an electric shock or damage to the device.

Turn off the detector with its main power switch. Disconnect the power cord from both the power source and the device.

Use only the fuses of the type and current rating specified for the detector by Thermo Fisher Scientific. Do not use repaired fuses and do not short-circuit the fuse holders.

Follow these steps

The fuse holder is located next to the main power switch.

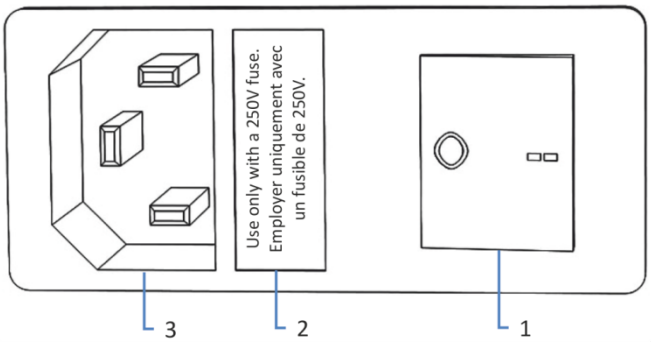

Figure 36: Fuse holder

No.	Description
1	Main power switch (on/off control)
2	Fuse holder
3	Power-inlet connector

1. Use the screwdriver to remove the fuse holder.
2. Replace the two fuses with new fuses of the specified type and current rating. Always replace *both* fuses.
3. Reinstall the fuse holder.
4. Reconnect the power cord to the power source and to the detector.
5. Turn on the detector with the main power switch.

7.10 Updating the Detector Firmware

When

Updating the detector firmware might be required, for example, when a new firmware version is released that adds functionality or solves problems of a previous version.

Items required

Firmware version/Chromeleon Service Release as appropriate

TIP When a new firmware version is released, the new version will be included in the next available Chromeleon Service Release. The new firmware will *not* be transferred automatically to the device when you install the Chromeleon Service Release.

Preparations

- Read the release notes provided with the firmware and/or Chromeleon Service release.
- Verify the following:
  - The detector is connected in Chromeleon.
  - All operations on the instrument (Chromeleon 7) or timebase (Chromeleon 6.8) that includes the detector have been stopped. The instrument or timebase is idle.
- Turn off the pump flow and then the gas flow:

  a) Turn off the pump flow to the detector. Wait at least 5 minutes. During the waiting period, the detector drains any remaining mobile phase to waste.

  b) Turn off the gas flow on the detector.

  c) Wait until the system pressure is down to zero before you continue.

  d) Turn off the gas supply to the detector.

Follow these steps

1. Start the Chromeleon 7 Instrument Configuration Manager or the Chromeleon 6.8 Server Configuration program.
2. Perform a firmware update from the **General** tab page in the configuration dialog box for the detector. For details, refer to the *Chromeleon Help*.

NOTICE A firmware downgrade or incomplete firmware update may result in loss of functionality or malfunctioning of the detector.

- Do not interrupt communication between the Chromeleon software and the detector at any time during the procedure.
- At the beginning of the update process, a message appears showing the firmware version currently installed in the detector and the version that will be transferred from the Chromeleon software. If the firmware installed in the detector is a later version than the version in Chromeleon, cancel the download.

The firmware update may take several minutes.

- Monitor the Audit Trail of the Chromeleon Instrument Configuration Manager (or Server Configuration program) to see whether the firmware update was successful or failed.
- If the firmware update failed, turn the device off and on again and repeat the firmware update.
- If the firmware update fails repeatedly, contact Thermo Fisher Scientific Technical Support for assistance.

3. After a successful firmware update, requalification of the detector may be required. See the release notes for a recommendation.

7.11 Replacing the Doors

When

Damage of door

TIP The maintenance procedures do not require that you remove the doors. If this should ever be required for a specific reason or procedure, follow the related steps in this section.

Parts required

Replacement door

Follow these steps

NOTICE To avoid damage to the door hinges, be careful when performing the following sequence of steps and do not apply force.

1. To remove a door, push the door upward while opening.
   Open the door to a position in which the two hinges on the housing are aligned in the grooves on the door. You can remove the door only when the hinges are in the grooves.

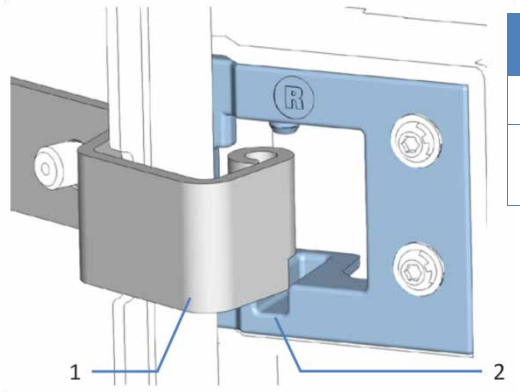

No.	Description
1	Hinge on the housing
2	Reception groove on the door

Figure 37: Unhinging a door

2. Slightly tilt the door to the outside, away from the housing, and remove the door.

3. To install the door, align the door with the hinges on the housing. Be careful not to clamp tubing or capillaries between the door and the enclosure.

4. Insert the hinges in the groove, by pushing up and slightly turning the door.
5. Push the door downward to lock it in place.
   You can close the door only when it is properly installed.

7.12 Transporting or Shipping the Detector

If you want to transport the detector to a new location or if you need to ship the detector, first prepare the detector for transport and then move or ship the detector as required. Follow the instructions in this section.

Observe the following safety guidelines:

CAUTION—Heavy Load, Bulky Device

The detector is too heavy or bulky for one person alone to handle safely. To avoid personal injury or damage to the detector, observe the following guidelines:

- Physical handling of the detector, including lifting or moving, requires a team effort of two persons.
- A team effort is in particular required when lifting the detector into the system stack or when removing it.
- Use the carrying handles that were shipped with the detector to move or transport the detector. Never move or lift the detector by the front doors. This will damage the doors or the detector.

Preparing the Detector for Transport

To prepare the detector for transport, follow these steps:

1. Perform a long-term shut down of the detector. See section 6.8.2 Long-Term Shutdown, page 112.
2. Turn off the detector with its main power switch and disconnect the power cord.
3. Remove all cables and flow connections to other devices.
4. Disconnect the gas inlet and exhaust tubes from the detector. See section 7.5, page 125.
5. Disconnect the waste line from the detector. See section 7.6, page 127.
6. Remove the nebulizer. See section 7.7, page 128.

7. Install the carrying handles and remove the detector from the Vanquish system. Follow the instructions on dismounting the system stack in the *Transporting or Shipping the System* section of the *Vanquish System Operating Manual*.

> **TIP** To remove the slide-in module from the detector, follow the steps in section 7.13.1, page 145.

Transporting the Detector to a New Location

To transport the detector to a new location, follow these steps:

1. Observe the notes for handling and lifting the detector safely.
2. Transport the detector to the new location.
3. Install and set up the detector in the system stack. Follow the instructions on mounting the system stack in the *Vanquish System Operating Manual*.
4. Set up the detector:
   a) To connect the detector and to set up flow connections, follow the instructions in the *Installation chapter* in this operating manual.
   b) To prepare the detector for first-time operation, follow the instructions in the *Preparing the Detector for Operation section* in this operating manual.
5. Before starting an analysis, let the detector equilibrate and be sure that it is ready for operation.

Shipping the Detector

To ship the detector, follow these steps:

1. Follow the unpacking instructions in this manual in the reverse order.
   Use only the original packing material and shipping container. If the original shipping container is not available, appropriate containers and packing material can be ordered from the Thermo Fisher Scientific sales organization.

2. If you need to return the detector to Thermo Fisher Scientific for depot repair, contact your local Thermo Fisher Scientific support organization for the appropriate procedure.

CAUTION—Possible Contamination

Hazardous substances may have contaminated the device during operation and may cause personal injury to service personnel.

- Decontaminate all parts of the device that you want to return for repair.
- Fill in and sign the Decontamination Certificate, which is part of the Service Return Form. Sign the certificate to confirm that the device has been properly decontaminated and that it is free of hazardous substances.
- Thermo Fisher Scientific refuses to accept devices for repair if the Decontamination Certificate is missing.

Restarting the Detector after Shipping

To restart the detector after shipping, follow these steps:

1. Follow the unpacking instruction in this operating manual.
2. Install and set up the detector in the system stack. Follow the instructions on mounting the system stack in the *Vanquish System Operating Manual*.
3. Set up the detector:
   a) To connect the detector and to set up flow connections, follow the instructions in the *Installation chapter* in this operating manual.
   b) To prepare the detector for first-time operation, follow the instructions in the *Preparing the Detector for Operation section* in this operating manual.
4. Before starting an analysis, let the detector equilibrate and be sure that it is ready for operation.

7.13 Slide-In Module

CAUTION—Damaged Gas Tubes and Compressed Gas

Trying to remove the slide-in module with the gas tubes being connected to the detector can damage the gas tubes and the connectors on the detector. Using damaged gas tubes with compressed air can pose health and safety risks. Disconnect the gas tubes always before you remove the slide-in module from the enclosure.

CAUTION—Heavy Load, Bulky Device

The detector is too heavy or bulky for one person alone to handle safely. To avoid personal injury or damage to the detector, observe the following guidelines:

- Physical handling of the detector, including lifting or moving, requires a team effort of two persons.
- A team effort is in particular required when lifting the detector into the system stack or when removing it.

7.13.1 Removing the Slide-In Module

Tools required

Screwdriver, Torx T20

Preparations

Prepare the detector for transport. See the *Transporting or Shipping the Detector section* in this operating manual.

Follow these steps

1. Loosen the four captive screws on the front left and front right of the detector.

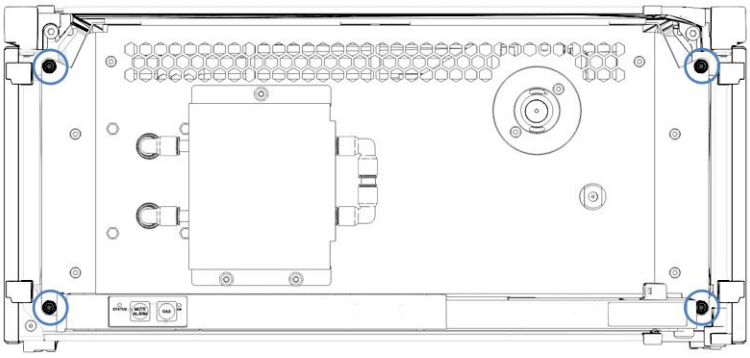

Figure 38: Captive screws on the slide-in module

2. Push all tubing and capillaries, which are present in the tubing chase of the Vanquish system modules, into the tubing chase. Otherwise, you will not be able to remove the slide-in module properly from the enclosure in the next step.

3. Grasp the slide-in module by the leak tray, and pull the module out of the enclosure by approximately 10 cm.

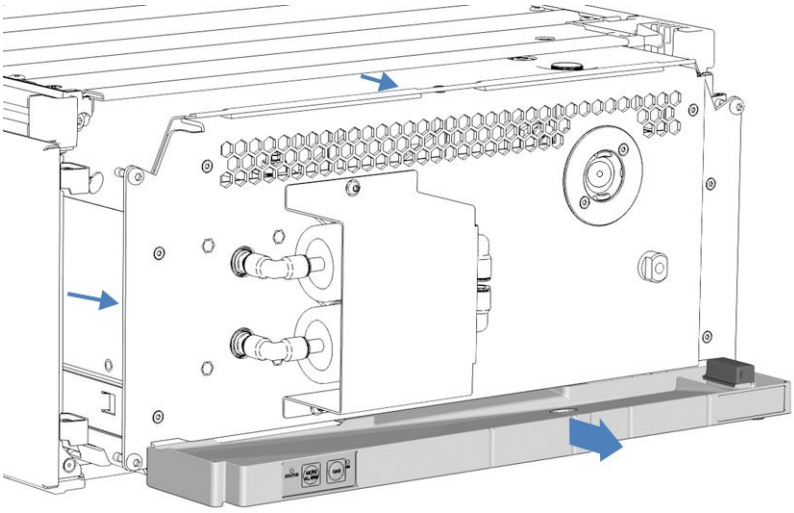

Figure 39: Pulling out the slide-in module

NOTICE The slide-in module can fall down when pulling it out of the enclosure too far. Pull out the slide-in module just far enough so that you can grasp it on both sides from below.

4. Remove the slide-in module from the enclosure.
   The following steps require a team effort:
   a) Take the slide-in module on both sides from below.
   b) Pull the slide-in module from the rails towards the front.
   c) Place the slide-in module on a clean and stable surface.
5. Return the slide-in module:
   a) To request a dedicated packaging for the slide-in module and for the appropriate procedure for returning the module, contact your local Thermo Fisher Scientific support organization.
   b) Pack the slide-in module in the dedicated packaging.

NOTICE The packaging for the slide-in module differs from the packaging for the complete module. Shipping the slide-in module or the detector incorrectly leads to damage on the device. Always pack and ship the slide-in module and the detector in the respective, dedicated packaging.

CAUTION—Possible Contamination

Hazardous substances may have contaminated the device during operation and may cause personal injury to service personnel.

- Decontaminate all parts of the device that you want to return for repair.
- Fill in and sign the Decontamination Certificate, which is part of the Service Return Form. Sign the certificate to confirm that the device has been properly decontaminated and that it is free of hazardous substances.
- Thermo Fisher Scientific refuses to accept devices for repair if the Decontamination Certificate is missing.

7.13.2 Installing the Slide-In Module

Parts required

Replacement slide-in module

Tools required

Screwdriver, Torx T20

Preparations

1. Verify that the detector enclosure into which the slide-in module is installed is clean. If required, clean the inner and outer surfaces of the enclosure. See the *Cleaning the Detector section* in this operating manual.
2. When installing the slide-in module to an enclosure in the system stack, check that the enclosure is placed correctly in the stack.
3. Open the doors of the enclosure.

Follow these steps

1. Unpack the slide-in module. Remove any foam spacers from the module.
2. Push all tubing and capillaries, which are present in the tubing chase of the Vanquish system modules, into the tubing chase. Otherwise, you will not be able to insert the slide-in module properly into the enclosure in the next step.
3. Insert the slide-in module in the enclosure.
   The following steps require a team effort:
   a) Take the slide-in module on both sides from below.
   b) Lift the slide-in module to the height of the enclosure.
   c) Place the slide-in module in the enclosure so that the module sits in the enclosure by approximately 25 cm.

d) Push the slide-in module onto the rails and into the enclosure until the slide-in module sits completely in the enclosure.

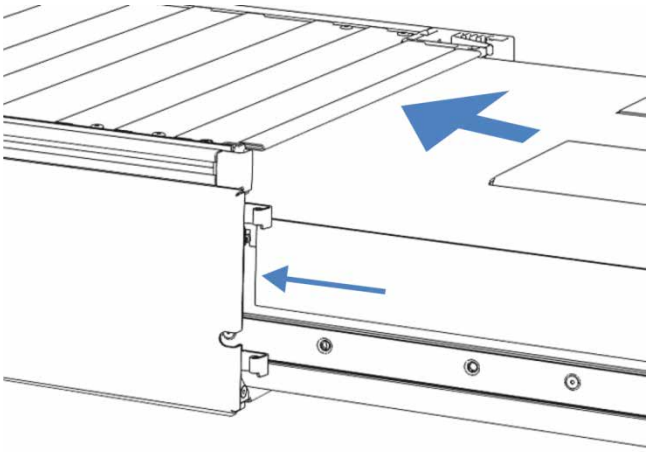

Figure 40: Inserting the slide-in module

4. Tighten the four captive screws on the slide-in module hand-tight.

NOTICE Verify that the screws are tightened. Pull the slide-in module by the leak tray towards the front and check whether the screws move. If they do not move, the slide-in module is installed properly. If the screws move, tighten the screws further.

5. Set up the slide-in module:

   a) To connect the slide-in module and to set up flow connections, follow the instructions in the *Installation chapter* in this operating manual.

   b) To prepare the slide-in module for first-time operation, follow the instructions in the *Preparing the Detector for Operation section* in this operating manual.

6. Prepare *all other* modules of the Vanquish system for operation and restart them. Refer to the *Operating Manuals* for the modules.

7. Before starting an analysis, let the chromatography system equilibrate and be sure that it is ready for operation.

8 Troubleshooting

This chapter is a guide to troubleshooting issues that may arise during operation of the detector.

8.1 General Information about Troubleshooting

The following features help you to identify and eliminate the source for problems that may arise during operation of the detector.

TIP For information about operating problems that might occur during the operation of a Vanquish system, refer to the *Vanquish System Operating Manual*.

If you are unable to resolve a problem following the instructions given here or if you experience problems that are not covered in this section, contact Thermo Fisher Scientific Technical Support for assistance. See the contact information at the beginning of this manual.

To facilitate device identification have the serial number and technical name available when communicating with Thermo Fisher Scientific.

Status Indicators

The status indicator LED bar on the front side of the detector and the **STATUS** LED on the keypad inside provide quick visual feedback on the operational status of the device. If the detector firmware detects a problem, the status indicators are red. The problem is reported to the Chromeleon software and a message appears in the Audit Trail. For possible causes and recommended remedial actions, see section 8.2 Messages, page 155.

Alarms

Leaks are a potential safety issue. Therefore, if a leak sensor detects leakage, beeping starts to alert you in addition to the message in the Chromeleon Audit Trail and the status indicators changing to red. Follow the instructions in this manual to find and eliminate the source for the leakage.

Chromeleon Audit Trail Messages

If the device firmware detects a problem, the problem is reported to the Chromeleon software.

The Chromeleon software logs information about all events related to instrument operation for the current day in an Audit Trail. The Audit Trail is named with the current date, using the format yyyymmdd. For example, the Audit Trail for May 15, 2013, is named 20130515.

- *Chromeleon 7*: The Instrument Audit Trails can be found on the ePanel Set (Audit ePanel). In addition, Audit Trails for each instrument are available in the Chromeleon 7 Console Data view, in the folder of the instrument.
- *Chromeleon 6.8*: The Daily Audit Trails can be found on the panel tabset (Sequence Control panel). In addition, Daily Audit Trails are available in the Browser, in the folder of the timebase.

Messages in the Chromeleon Audit Trail are preceded by an icon. The icon identifies the seriousness of the problem. The table shows the icons and explains the severity level.

Icon	Severity	Description
	Warning	• The queue (Chromeleon 7) or batch (Chromeleon 6.8) can be started. • The current run is not interrupted. Nevertheless, Thermo Fisher Scientific recommends taking appropriate remedial action to resolve the problem.
	Error	The software attempts to correct the problem. An error does not interrupt the current analysis. However, if the error occurs during the Ready Check, the analysis will not be started.
or	Abort	• The queue (Chromeleon 7) or batch (Chromeleon 6.8) cannot be started. • A running queue or batch is stopped immediately.

For possible causes and recommended remedial actions, see section 8.2 Messages, page 155.

Troubleshooting Parameters

The following parameters provide helpful information for troubleshooting if a problem occurs in the charged aerosol detector:

Parameters	Description
Gas flow ratio	Displays the ratio of the nebulizer gas pressure to the charging gas pressure. As a standard, the **Gas Flow Ratio** is **Normal**. For troubleshooting information on the gas flow ratio, see section 8.3.4, page 161.

Parameters	Description
Charger voltage	Displays the voltage applied to the corona needle to charge the (secondary) ion gas stream. Typical value ranges from 2.0 - 3.0 kV. If the value is outside of this range, contact Technical Support.
Charger current	Displays the current that is required to charge the (secondary) ion gas stream. Typical value ranges from 0.98 - 1.02 µA. If the value is subject to fluctuations or outside of this range, contact Technical Support.

8.2 Messages

The table lists the most frequently observed messages for the detector and provides troubleshooting assistance. Each message consists of two-digit or four-digit code number and a text. The code number is the unique identifier for the problem while the wording may change. If you are unable to resolve the problem following the instructions, contact Technical Support for assistance.

TIP If a message appears in the Audit Trail that is not listed in the table, write down the code and wording of the message. If you are unable to resolve the problem, contact Thermo Fisher Scientific Technical Support for assistance.

Message and Code	Description and Remedial Action
Unexpected module behavior. Code XX	XX can be a two-digit or four-digit code number. When the message appears, write down the message code and turn off the module. Wait for 5 seconds and turn on the module again. If the message appears again, contact Technical Support.
Module malfunction detected. Code XX	XX can be a two-digit or four-digit code number. When the message appears, write down the message code. Turn off the module and contact Technical Support.
	NOTE: If the message appears with *code 6008*, the detector gas flow and the pump flow are automatically stopped. The drain pump remains turned on for a short period longer and is then turned off. Turn the detector off and on. If the message appears again, contact Technical Support.
Code 33 Leak detected – eliminate within approx. XX seconds.	With XX = the number of seconds within the leak must be resolved Find and eliminate the source for the leakage (see section 8.3.1, page 158).
Code 34 Leak detected.	Find and eliminate the source for the leakage (see section 8.3.1, page 158).
Code 36 Download failed	The firmware download has not been successful. Repeat the download.

Message and Code	Description and Remedial Action
Code 89 Liquid leak sensor missing or defective	Contact Thermo Fisher Scientific Technical Support for assistance. To operate the detector nevertheless, you can disable the leak sensor functionality in Chromeleon by setting **Leak Sensor Mode** to **Disabled**.
Code 90 Download firmware mismatch – invalid version	You tried to download a firmware with an earlier version number than the firmware that is currently installed in the detector. Downgrading the firmware may result in loss of functionality or malfunctioning of the detector. If required, repeat the download a firmware version later than the version currently installed in the detector.
Code 6007 Gas flow too low.	The gas flow inside the detector is too low. The detector gas flow and the pump flow are automatically stopped. The drain pump remains turned on for a short period longer and is then turned off. • Make sure that gas is still supplied to the detector. Check that the gas supply pressure is within the allowed range. See the *Gas specifications* in section 9.1, page 164. • Check that the nebulizer gas pressure is set as specified on the nebulizer gas pressure certificate. • Turn the detector off and on. Check the self-test results. If the message persists, contact Technical Support.
Code 6009 Nebulizer gas pressure too low.	The nebulizer gas pressure has dropped below the minimum limit. The detector gas flow and the pump flow are automatically stopped. The drain pump remains turned on for a short period longer and is then turned off. • Make sure that gas is still supplied to the detector. Check that the gas supply pressure is within the allowed range. See the *Gas specifications* in section 9.1, page 164. • Check that the nebulizer gas pressure is set as specified on the nebulizer gas pressure certificate. • Check the gas inlet tubing and gas filter assembly for signs of gas leakage and proper connection to the detector. • Turn the gas flow off and on to check that the internal gas solenoid valve functions properly. • Turn the detector off and on. Check the self-test results. If the message persists, contact Technical Support.

Message and Code	Description and Remedial Action
Code 6010 Nebulizer gas pressure too high.	The nebulizer gas pressure has exceeded the maximum limit. The detector gas flow and the pump flow are automatically stopped. The drain pump remains turned on for a short period longer and is then turned off. • Make sure that gas is still supplied to the detector. Check that the gas supply pressure is within the allowed range. See the *Gas specifications* in section 9.1, page 164. • If the gas supply pressure exceeds 620 kPa (6.2 bar, 90 psi), the overpressure relief valve will open. This creates a loud hissing sound. To remedy the gas supply overpressure, see section 8.3.2 Resolving Gas Supply Overpressure, page 159. • Check that the nebulizer gas pressure is set as specified on the nebulizer gas pressure certificate. • Check the gas inlet tubing and gas filter assembly for proper connection to the detector. • Turn the detector off and on. Check the self-test results. If the message persists, contact Technical Support.
Code 6011 Detection chamber flooded. Stop pump immediately.	Excess liquid is present inside the detector. The detector gas flow and the drain pump are automatically turned on and the pump flow is stopped. See section 8.3.3 Resolving Flooding In the Detector, page 160.
Code 6031 Data transfer error from detector to PC – check USB connection.	Check the USB connection. Test the transmission speed of the data source (the network may be too slow).
Code 6032 Data transfer error from detector to PC – check USB connection.	Check the USB connection. Use only the USB cables provided by Thermo Fisher Scientific for the detector. Avoid CPU-intensive and time-consuming operations on the PC during high-speed data acquisition.

8.3 Operating Problems

This section is a guide to troubleshooting issues that may arise during operation of the Vanquish charged aerosol detector.

8.3.1 Resolving Leakage

When

The leak sensor is wet. The leak sensor reports leakage.

Parts required

Replacement part as required

Additional items required

Cloth or tissue

Preparations

When resolving leakage, observe the safety guidelines and general rules for maintenance and service as presented in chapter 7 Maintenance and Service, page 115.

Follow these steps

1. Locate the source of the leak.
   As leakage usually occurs at a connection, visually inspect all components and connections in the flow path.

   If liquid is visible on the nebulizer, leakage may have occurred in the nebulizer. Remove the nebulizer from the detector (see section 7.7, page 128). Inspect the nebulizer for signs of leakage.

   - If no signs for leakage are present, re-install the nebulizer (see section 5.5.3, page 62).
   - If signs of leakage are present, proceed with the steps below.
2. Tighten or replace the connection or component as required.
3. With a cloth or tissue, thoroughly absorb all liquid that has collected in the leak tray and under the leak sensor. Be careful not to bend the sensor.
4. Allow the sensor to adjust to the ambient temperature for a few minutes.
5. If leakage is no longer reported, you can resume operation.

8.3.2 Resolving Gas Supply Overpressure

CAUTION—Excessive Gas Supply Pressure

An improper or excessive gas supply pressure can lead to an overpressure in detector that can cause the detector to release gas. This can pose a health and safety risk.

- Observe the gas supply pressure range that is specified for the detector. Do not exceed the maximum gas supply pressure.
- If the overpressure relief valve is releasing gas as a result of an overpressure in the detector during operation, turn off the detector immediately. Remedy the situation as described in the *Resolving Gas Supply Overpressure* section in this manual.

When

The gas supply pressure has exceeded 620 kPa (6.2 bar, 90 psi). The detector cannot pressurize properly.

The overpressure relief valve on the gas inlet inside the detector will open and release gas pressure to prevent damage to the detector. This creates a loud hissing sound.

Follow these steps

To remedy the situation, follow these steps:

1. Turn off the pump flow and then the gas flow:
   a) Turn off the pump flow to the detector. Wait at least 5 minutes. During the waiting period, the detector drains any remaining mobile phase to waste.
   b) Turn off the gas flow on the detector.
   c) Wait until the system pressure is down to zero before you continue.
   d) Turn off the gas supply to the detector.
2. Check that the gas supply pressure is within the allowed range. See the *Gas specifications* in section 9.1, page 164.

3. On the gas supply, turn on the gas flow to the detector.
   If the gas supply pressure has fallen within the allowed range, the overpressure relief valve will remain closed.
4. Turn on the gas flow in the detector. See section 6.5.3, page 99.
5. In Chromeleon, check that the nebulizer gas pressure reading (**Gas Regulator Pressure** parameter) has returned to the allowed range.

If the problem persists, contact Thermo Fisher Scientific Technical Support for assistance.

8.3.3 Resolving Flooding In the Detector

When

The liquid sensor inside the detector detected a build-up of excess liquid (flooding) inside the detector.

A related message appears in the Audit Trail. See section 8.2 Messages, page 155.

Follow these steps

1. Leave the detector gas flow turned on to dry the excess liquid. If there is only a small amount of liquid present inside the detector, the liquid may evaporate when leaving on gas flow overnight.

   TIP The period for leaving the gas flow turned on depends on the severity of the excess liquid that build-up.

2. If the message has disappeared, turn the detector gas flow off and on. Check the following indicators:
   - *If the status indicators are no longer red and the message in the Chromeleon Audit Trail no longer appears*
     The excess liquid build-up is removed.
   - *If the status indicators are still red and the message in the Chromeleon Audit Trail still appears*
     Write down the code and wording of the message, and contact Thermo Fisher Scientific Technical Support for assistance.

8.3.4 Additional Detector Operating Problems

This section provides additional issues that may arise during operation of the Vanquish charged aerosol detector. Locate the table for the type of symptom you have, find the possible cause, and use the description of the solution to help you solve your problem quickly.

Also check the Chromeleon Audit Trail for a related message if an operating problem occurs. The message may provide additional information.

Note that this section provides information on symptoms and causes directly related to the Vanquish charged aerosol detector. For information about troubleshooting for the Vanquish system, refer to the *Vanquish System Operating Manual*.

TIP If you are unable to resolve a problem following the instructions given here or if you experience problems that are not covered in this section, contact Thermo Fisher Scientific Technical Support for assistance.

Symptom	Possible Cause	Remedial Action
Baseline noise and/or poor precision	Change in background current	If the **Background_Current** signal channel is changing, this can indicate a contamination in the flow path of the system. Make sure that all components in the liquid flow path are free from contamination.
	Unstable gas regulator pressure	If the **GasReg_Pressure** signal channel shows an instability in the nebulizer gas pressure, this can lead to baseline noise and/or poor precision. Check that the gas supply pressure is stable. If the instability remains, contact Technical Support.
	Unstable evaporation temperature	If the **Evap_Tube_Temp** signal channel is unstable, this can lead to higher baseline noise and/or poor precision.
High gas flow ratio	Clogging in the detector	Contact Technical Support.
Low gas flow ratio	Gas leak	Check the Audit Trail for the respective message. See section 8.2 Messages, page 155.

Symptom	Possible Cause	Remedial Action
High backpressure	Nebulizer nozzle/capillary clogged	Poor solubility of analyte during nebulization/analyte build-up. Check the backpressure of the nebulizer: 1. Remove the nebulizer from the detector (see section 7.7, page 128). 2. Set up a direct flow connection from the pump to the nebulizer. Make sure no other module is connected in between. 3. Carefully flow liquid through the nebulizer capillary from the pump. The backpressure of the nebulizer is typically below 10 bars. Liquid should exit the capillary in drops. If the backpressure rises in the pump, then a blockage is present in the nebulizer capillary. Contact Technical Support. To avoid blockage in the nebulizer, always use the detector with an appropriate mobile-phase composition to maintain solubility.
Negative peaks	Wrong polarization of the analog output	Contact Technical Support.
Loss of response	Change in parameters	Check that the detector is turned on and the data acquisition is on. Check the parameter settings.
	Drain pump failed	Check that the drain pump is turned on.
	Gas flow turned off	Check that the gas flow is turned on in the detector and the gas supply.
	Reduced gas flow	• Make sure that the gas is flowing into the detector. • Check the nebulizer gas pressure and the gas supply pressure. • Check gas filter assembly. If necessary, replace the gas filter assembly (see section 7.8, page 131).
	Gas leaking	Check the gas connections and the gas inlet and exhaust tubes. Remedy the gas leak and/or replace the gas tubes (see section 7.5, page 125).
Inability to autozero the signal	Autozero on a peak or void signal	The Autozero occurred on a relatively flat section of the chromatogram.
	Autozero on a very noisy signal	Reduce the noise or increase the current range.
Liquid in the gas exhaust	Flooding inside the detector (pump flow turned on while no gas flow present)	Flooding can occur if the detector is turned off while liquid is still flowing into the detector. See section 8.3.3 Resolving Flooding In the Detector, page 160.

9 Specifications

This chapter provides the physical and performance specifications, including information about the materials used in the flow path of the detector.

9.1 Performance Specifications

The detector performance is specified as follows:

Type	Specification
Detection type	Charged aerosol detection
Nebulization	FocusJet, concentric
Pump flow rate	
VH-D20	0.01 – 2.0 mL/min
VF-D20	0.2 – 2.0 mL/min
Evaporation temperature	
VH-D20	Adjustable range: ambient +5 to +100 °C
VF-D20	Selectable temperatures: +35 °C, +50 °C, +70 °C
Signals	
Data collection rate	
VH-D20	Adjustable, 2.0 Hz – 200 Hz (max. 100 Hz with Chromeleon 6.8)
VF-D20	Adjustable, 2.0 Hz – 100 Hz
Filter response time	Digital filter, selectable in numerical sequence (1-2-5 increments)
Digital filter constants	Selectable between 0.1, 0.2, 0.5, 1.0, 2.0, 3.6, 5.0 10.0 seconds
Dynamic range	Up to 4 orders of magnitude
Gas specifications	
Gas pressure control	Electronically controlled
Supply gas	Compressed air or nitrogen
Gas supply pressure	482 - 551 kPa (4.8 - 5.5 bar, 70 - 80 psi)
Communication	
USB	1 USB port (USB 2.0, "B" type connector) 1 USB hub with 3 ports (USB 2.0, "A" type connectors)
System Interlink	2 system interlink ports (RJ45-8 connectors)
Analog output	Installable option; 1 BNC-type analog output connector
Full-scale analog output range	1 pA to 500 pA in 1-2-5 sequence
Analog signal output	0 – 1 V DC

Type	Specification
Control	Chromeleon 7, Chromeleon 6.8 The detector can be operated also with other data systems. For details, contact the Thermo Fisher Scientific sales organization. Keypad with 2 buttons for performing certain functions directly from the detector
Materials in the flow path	Stainless steel (type 316), Nitronic® 60 stainless steel, PEEK, SimRiz®, fused silica **NOTICE** For information about the chemical resistance of materials refer to the technical literature.
Solvent and additive information	See section 2.4, page 25.
Safety features	• Overpressure relief valve on gas inlet • Liquid detection inside the detector and safe leak handling • Detection of high evaporation temperatures • Pump flow shutdown • Leak detection and safe leak handling
Good Laboratory Practice (GLP) features	Predictive Performance functions for scheduling maintenance procedures based on the actual operating and usage conditions of the detector. This includes monitoring of the replacement interval for the gas filter assembly and the service interval. All system parameters are logged in the Chromeleon Audit Trail.

9.2 Physical Specifications

The physical conditions of the detector are specified as follows:

Type	Specification
Range of use	Indoor use only
Ambient temperature	5 – 35 °C
Ambient humidity	20 - 80% relative humidity (non-condensing)
Operating altitude	Maximum 2000 m above sea level
Pollution degree	2
Power requirements	100 – 240 V AC, ± 10%; 50/60 Hz; max. 150 W / 255 VA
Overvoltage category	II
Emission sound pressure level	typically <50 dB(A)
Dimensions (height x width x depth)	19.2 x 42 x 62 cm
Weight	Approx. 18 kg

10 Accessories, Consumables and Replacement Parts

This chapter describes the standard accessories that are shipped with the detector and the accessories that are available as an option. This chapter also provides information for reordering consumables and replacement parts.

10.1 General Information

The detector must be operated only with the replacement parts and additional components, options, and peripherals specifically authorized and qualified by Thermo Fisher Scientific.

Accessories, consumables, and replacement parts are always maintained at the latest technical standard. Therefore, part numbers are subject to change. If not otherwise stated, updated parts will be compatible with the parts they replace.

10.2 Ship Kit

The ship kit includes the items listed in the table. The kit content is subject to change and may vary from the information in this manual. See the content list included in the kit for the most recent information about the kit content at the time when the detector is shipped.

Ship kit

Item	Quantity in shipment
Screwdriver, Torx T10	1
Tubing adapter, inch to metric, OD 1/4"	1
Tubing cutter	1
Multitool	1
Tubing kit, including: • Gas inlet elbow connector • Gas inlet tubing • Gas exhaust elbow connector • Gas exhaust tubing • Waste line	1
Capillary, Viper, 0.13 mm I.D., 350 mm length	1
Viper union	1
Fuse, 3.15AT, 250 V AC, slow-blow, 5 x 20 mm	2
System interlink cable	1
USB cable, USB 2.0, high-speed, type A to type B, 2 m	1

For reordering information, see section 10.4 Consumables and Replacement Parts, page 171.

10.3 Optional Accessories

Item	Part No.	Remarks
Corona nitrogen generator 1010	6295.0200	Provides on-demand, uninterrupted supply of dry nitrogen from a compressed air source.
Corona air compressor 230 V	6295.0300	Supplies the required amount of air pressure for operation of the detector.
Corona air compressor 110 V	6295.0350	Supplies the required amount of air pressure for operation of the detector.
Analog signal output kit	Contact Service.	Includes all components required for installation of an analog signal output to the detector. Installation must be performed by a Thermo Fisher Scientific service engineer.

10.4 Consumables and Replacement Parts

Capillaries, tubing and tubing tools

Description	Part No.
Capillary, Viper, 0.13 mm I.D., 350 mm length	6040.2335
Viper union	6040.2304
Tubing cutter	70-7112
Multitool	40-0288
For system capillaries, refer to the *Vanquish System Operating Manual.*	

Gas components

Description	Part No.
Gas filter assembly kit, consisting of charcoal gas filter and HEPA gas filter	6081.7062

Miscellaneous

Description	Part No.
Front door kit, including right door and left door	6036.1920
Slide-in charged aerosol detector module	
VH-D20	6084.1420
VF-D20	6084.1430
Torx screwdriver kit, containing screwdrivers Torx T10 and T20	6040.0010
Fuses kit, Vanquish system The kit includes the appropriate fuses for the Vanquish system modules. For the detector, use only 3.15AT, 250V AC, slow-blow fuses.	6036.0002

Interface cables

Description	Part No.
USB cables, type A to type B, high-speed, USB 2.0	
• Cable length: 1 m	6035.9035
• Cable length: 5 m	6911.0002

Description	Part No.
System interlink cable	6036.0004

Power cords

Description	Part No.
Power cord, Australia, China	6000.1060
Power cord, Denmark	6000.1070
Power cord, EU	6000.1000
Power cord, India, SA	6000.1090
Power cord, Italy	6000.1040
Power cord, Japan	6000.1050
Power cord, UK	6000.1020
Power cord, USA	6000.1001
Power cord, Switzerland	6000.1030

11 Compliance Information

This chapter provides additional information about compliance.

11.1 Declarations of Conformity

CE Declaration of Conformity

The device has satisfied the requirements for the CE mark and is compliant with the applicable requirements.

cTUVus Compliance

The cTUVus label on the device indicates that the device has satisfied the requirements for the cTUVus mark. Compliance with the applicable standards has been evaluated by TÜV Rheinland of North America Inc.

11.2 WEEE Compliance

This product is required to comply with the European Union's Waste Electrical & Electronic Equipment (WEEE) Directive 2002/96/EC. It is marked with the following symbol:

Figure 41: WEEE symbol

Thermo Fisher Scientific has contracted with one or more recycling or disposal companies in each European Union (EU) Member State, and these companies should dispose of or recycle this product. For further information, contact Thermo Fisher Scientific.

11.3 FCC Compliance

This equipment has been tested and found to comply with the limits for a Class A digital device, pursuant to part 15 of the U.S. FCC Rules.

These limits are designed to provide reasonable protection against harmful interference when the equipment is operated in a commercial environment. This equipment generates, uses, and can radiate radio frequency energy and, if not installed and used in accordance with the instructions, may cause harmful interference to radio communications. Operation of this equipment in a residential area is likely to cause harmful interference, in which case the user will be required to correct the interference at his expense.

12 Index

A

accessories 167
optional 170
ship kit 169
additive
information 25
Audit Trail messages 155
autozero 100

B

background current (signal channel) 100, 106
baseline noise optimization 110
buffer
information 25
buffer concentration 25

C

CAD_1 (signal channel) 100, 106
capillaries
guide 71
install 73
Viper 73
CE mark 174
charger current 154
charger voltage 154
chloride concentration 25
Chromeleon 37
device setup 82
module setup 82
Smart Shutdown 111
Smart Standby 111
Smart Startup 94
condensation 50
connectors 58
consumables 167, 171
cTUVus mark 174

D

data collection rate 101, 104
guidelines 104
decontamination 121
detector gas flow 99
door 55
open 55
replacement 140
unhinge 116, 140
drain system 80
drainage 80

E

equilibration 93
evaporation temperature
actual temperature 102
control 102
guidelines 107
nominal temperature 102
WaitForTempReady 107
evaporation temperature (signal channel) ... 100, 106
excess liquid (flooding)
detection 36

F

FCC 176
features overview 30
filter constant 101, 104
guidelines 105
FilterDone 124
flow connections (liquid) 70
nebulizer 76
waste line 75
flushing between analyses 121

G

Gas button 88
gas exhaust 59
connecting 67
ventilation requirements 51
gas filter assembly 35
gas flow (detector)
turning off 112
turning on 99
gas flow ratio 153
gas inlet 59
connecting 67
gas supply requirements 52
gas regulation mode 101
Analytical mode 109
guidelines 109
MicroLC mode 109
gas regulator pressure
actual pressure 101
nominal pressure 101
gas regulator pressure (signal channel) 100, 106
gas state 100

gas supply 52
gas tubes
  connecting 67
gloves 21
guide hole 71

I

installation 45
interior view 33
Interlink 59

K

keypad 87
  gas 88
  mute alarm 88

L

leak detection 36, 102
leak sensor 36, 158
leak sensor mode 102
leakage 158
LED bar 87, 89, 152
liquid sensor 36
long-term shutdown 112

M

maintenance 115, 120
  flushing between analyses 121
maintenance interval 120
maintenance plan 120
messages 155
mobile phase guidelines 95
move 42
Mute Alarm 88

N

nebulizer 34
  gas pressure 98
  inlet capillary 76
  installing 62
null balancing 100

O

operating principle 31
operation 37, 83
  interrupt 111
optimization
  guidelines 103
  parameters overview 104
overview (functional) 29

P

peak width 101
pH range 25
power considerations 49
power cord 50
power function 102, 109
power up 81
Predictive Performance 123
protective clothing 20

Q

QualificationDone 124

R

rating plate 17
regulatory compliance 27
reordering 167
replacement parts 167, 171

S

safety glasses 21
safety guidelines
  case of emergency 24
  electrical safety 21
  general 19
  general hazards 22
  installation 46
  maintenance 117
  operation 85
  protective equipment 20
  qualification of personnel 20
  servicing 117
safety symbols 16, 17
series liquid flow connection 76
service 115
ServiceDone 124
setup
  hardware 56
  software 82
ship 142
ship kit 169
short-term shutdown 111

shutdown
long-term 112
short-term 111
signal channel 106
background current 100, 106
CAD_1 .....100, 106
evaporation tube temperature 100, 106
gas regulator pressure 100, 106
signal words 16
slide-in module 145
install 148
remove 145
Smart Shutdown 111
Smart Standby 111
Smart Startup 94
solvent
buffer concentration 25
chloride concentration 25
information 25
pH range 25
specifications 163
performance 164
physical 166
startup 93
status indicator
LED bar 87, 89, 152
Status LED 87, 89, 152
Status LED 87, 89, 152
system arrangement 56
system equilibration 93
System Interlink 59

T

transport 142
troubleshooting 151
tubing 73
tubing bracket 71
tubing chase 71
tubing guides 71
type label 17

U

Universal Serial Bus 59
unpack 40
USB 59

V

ventilation 51
Viper 73
Viper union 78

W

warming up 91
WEEE 175

www.thermofisher.com

Thermo Fisher Scientific Inc.
168 Third Avenue
Waltham
Massachusetts 02451
USA

ThermoFisher
SCIENTIFIC