MultiPro Autosampler

Part of Thermo Fisher Scientific

Thermo SCIENTIFIC

For Technical Support, please contact:
Thermo Fisher Scientific
5225 Verona Road
Madison, WI 53711-4495 U.S.A.
Telephone: 1 800 532 4752
E-mail: us.techsupport.analyze@thermofisher.com
World Wide Web: http://www.thermo.com/spectroscopy

For International Support, please contact:
Thermo Fisher Scientific
Telephone: +1 608 273 5017
E-mail: support.madison@thermofisher.com
World Wide Web: http://www.thermo.com/spectroscopy

269-236800, Rev A

Contents

Welcome

The MultiPro Autosampler is an accessory for the Antaris® FT-NIR analyzers that allows you to automate near-infrared measurements of powders, tablets and softgel capsules using both transmission and diffuse reflection sampling techniques. The autosampler's simple operation and dual measurement feature make it a useful tool for continuous, non-destructive analysis of samples in a wide range of applications, including:

- Product identification
- Drug content
- Characteristics of coatings on pharmaceutical tablets
- Moisture content of lyophilized materials in sealed vials
- Excipient concentration.

The autosampler interfaces with the Antaris integrating sphere sampling module and operates under RESULT® analysis software. The integrating sphere sampling module is included with the following Antaris systems:

- Antaris Method Development Sampling (MDS) System
- Antaris Solid Sampling System
- Antaris Tablet Analyzer System
- Antaris Reflection Transmission Sampling (RTS) System.

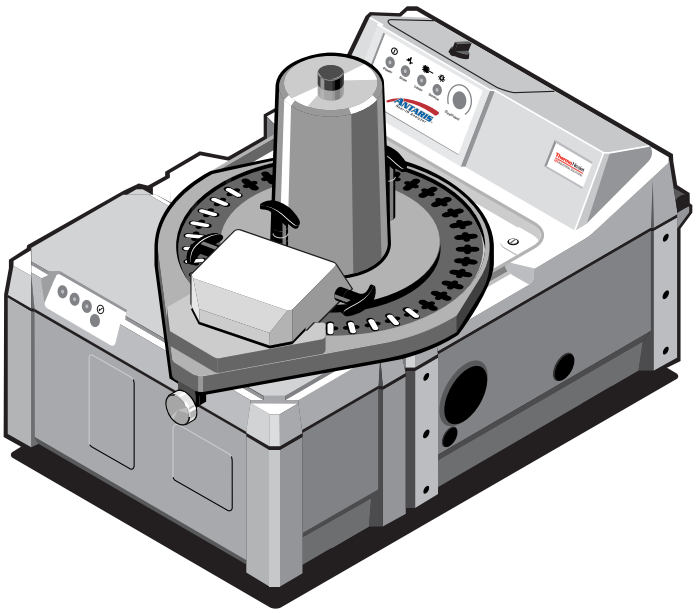

Antaris Solid Sampling System with MultiPro Autosampler

You should be familiar with the operation of your Antaris analyzer and RESULT software before using the MultiPro Autosampler. For complete information about the Antaris analyzer and system software, see your *Antaris User's Guide*.

About this manual

This manual discusses the important features of the MultiPro Autosampler and the precautions for safe operation. It also explains how to install, operate, maintain, service and store the autosampler.

Note This document is included on the language pack CD that comes with RESULT versions 1.2 and higher software (RESULT software suite revisions 2 and higher). It is a portable document format (*.PDF) file titled *Antaris MultiPro Autosampler User's Guide*. To open a PDF file, you need a copy of the Acrobat Reader program version 4.0 or higher, which can be downloaded from the Adobe® Acrobat® web site. See the Adobe Acrobat on-line help for information about using Acrobat Reader. ▲

Conventions used in this manual

This manual includes safety precautions and other important information presented in the following format:

Note Notes contain helpful supplementary information. ▲

Notice Follow instructions labeled "Notice" to avoid damaging the system hardware or losing data. ▲

⚠ Caution Indicates a hazardous situation which, if not avoided, could result in minor or moderate injury. ▲

⚠ Warning Indicates a hazardous situation which, if not avoided, could result in death or serious injury. ▲

⚠ Danger Indicates a hazardous situation which, if not avoided, will result in death or serious injury. ▲

Questions or concerns

In case of emergency, follow the procedures established by your facility. If you have questions or concerns about safety or need assistance with operation, repairs or replacement parts, you can contact our sales or service representative in your area or use the information at the beginning of this document to contact us.

Important Features

The important features of the MultiPro Autosampler include:

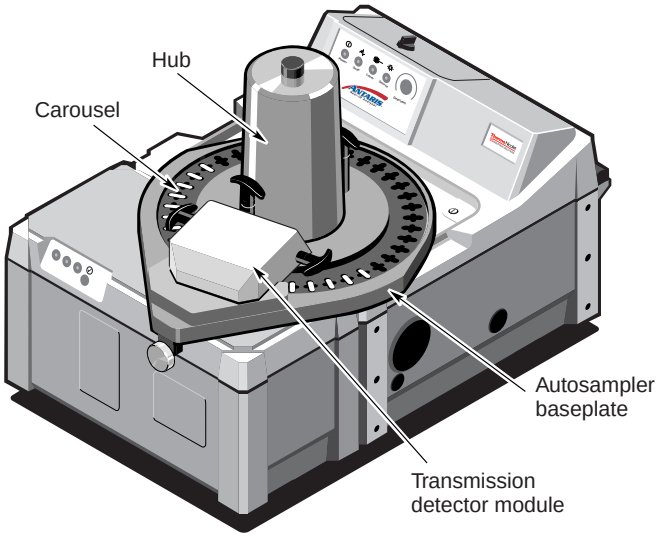

- Fast, nondestructive near-infrared measurements using both transmission and diffuse reflection sampling techniques.
- Sturdy baseplate that mounts securely on top of the Antaris analyzer, over the integrating sphere sampling module. No additional space is required.
- Transmission detector. The following detectors are available for transmission analysis: a tablet detector and a softgel detector. The tablet detector is optimized for transmission analysis of opaque tablets. The softgel detector is optimized for transmission analysis of softgel capsules.
- Hidden electrical connection via the integrating sphere data port. No external cable or power cord connections are used.

- Interchangeable carousels for automated transmission and diffuse reflection measurements. The carousels are available in a number of styles that accommodate a range of tablets, capsules and vials, as well as custom configurations designed to fit your sample or vial specifications.

- Accurate positioning of samples for repeatable analysis results.

- Automatic recognition, error detection and control through RESULT software, a dedicated analysis software package from Thermo Fisher Scientific. The system accurately tracks sample position even after interruptions to carousel movement, ensuring that each analysis result is associated with the correct sample.

- Automated transmission and diffuse reflection sampling that is fully compatible with manual measurements taken with the integrating sphere or tablet analyzer sampling modules.

- Automated background measurements for transmission and diffuse reflection sampling. Transmission backgrounds are measured through an empty carousel position. Diffuse reflection backgrounds can be collected using either the integrating sphere's internal reference or an external reference sample, such as Spectralon®.

- Ability to collect and analyze data from any number of samples and in any sequence. Analysis results can be reported for each sample or with statistical data for several carousels or an entire batch.

Hardware and software requirements

To run the MultiPro Autosampler, your system must have the following items:

- One of the following Antaris analyzers:
  - Antaris Method Development Sampling (MDS) System
  - Antaris Solid Sampling System
  - Antaris Tablet Analyzer System
  - Antaris Reflection Transmission Sampling (RTS) System.
- RESULT software version 1.2 or higher

- RESULT add-in option for the MultiPro Autosampler

- Antaris analyzer with firmware version 1.11 or higher, or Antaris II analyzer with firmware version 1.0 or higher.

RESULT software and the RESULT add-in option for the MultiPro Autosampler are included on the CD for RESULT software suite revisions 2 and higher. For software installation instructions, see the printed document that came with your RESULT software.

Dimensions and weight

The MultiPro Autosampler weighs about 7.1 kg (15.7 lb) and each carousel weighs approximately 1.4 kg (3 lb). When installed on an Antaris analyzer, the autosampler adds approximately 22.6 cm (8.9 inches) to the height of the sampling module; it does not change the overall length and width of the system. Approximate dimensions for the MultiPro Autosampler are provided in the illustration below.

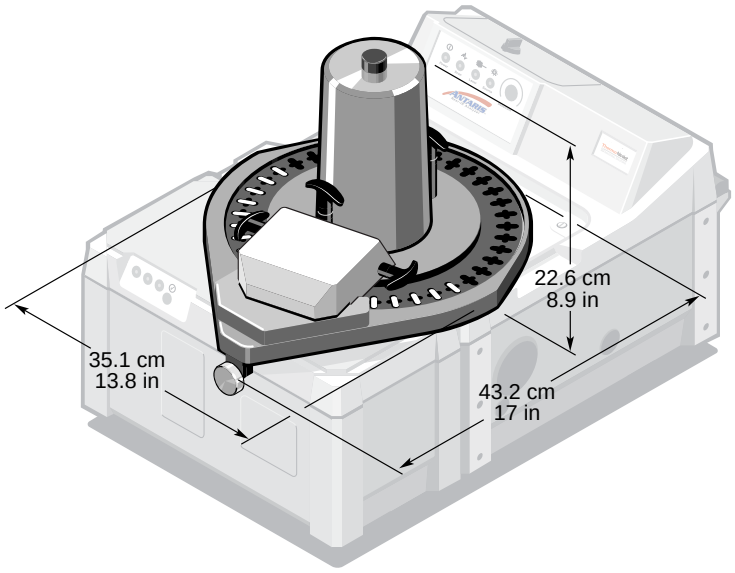

MultiPro Autosampler dimensions

Power consumption

The MultiPro Autosampler requires less than 8.5 W (29 Btu/hour) of power.

Operating Precautions

Before operating the MultiPro Autosampler, read the following precautions to avoid damaging components or causing injury to yourself. These precautions are repeated in relevant locations elsewhere in this document.

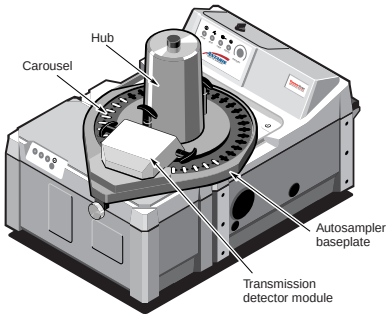

Before installing the autosampler, complete the following steps:

- Power off the Antaris analyzer to avoid possible damage to the electronics. Before you power off the analyzer, be sure to log off any software applications.

- Inspect the connectors. If the connectors are clogged or jammed, contact your Thermo Fisher Scientific service representative. *Do not* install the accessory and *do not* attempt to unclog or straighten the connectors yourself. See “Installing the MultiPro Autosampler” for details.

- Remove the large silver tray from the top of the Antaris instrument. The autosampler won’t latch properly while the tray is in place. The tray attaches to the top of the instrument by magnetized strips.

- Remove the tablet analyzer module or any sample, sample holder or accessory from the integrating sphere and clean the integrating sphere sampling area and window. See the documentation that came with the tablet analyzer, sample holder or accessory for instructions on how to remove it. See “Maintaining the MultiPro Autosampler” in this guide for instructions for cleaning the integrating sphere sampling window.

- Remove the carousel from the autosampler, if one is installed. See “Installing and Removing a Carousel” in this document for instructions.

When installing the autosampler on your Antaris analyzer, grasp the autosampler at the front and back of its base, not at the sides. The autosampler fits tightly onto the analyzer and your fingers could get pinched if you hold the sides while you lower the autosampler onto the analyzer. See “Installing the MultiPro Autosampler” in this document for more information.

When using the autosampler to run samples, keep in mind the following points:

- The transmission detector is protected by a sapphire window. Although sapphire is strong and scratch resistant, very harsh abrasive substances may scratch the window. If you remove the module, protect the window from abrasive substances and be careful not to drop the module.

- To avoid damaging the sapphire window when running samples, do not force the transmission module closed if the sample material is too thick for the module to close normally.

Before removing the autosampler from your Antaris analyzer, complete the following tasks:

- Exit RESULT software and power off the analyzer.

- Remove the carousel from the autosampler, if one is installed.

Always remove the autosampler before performing any maintenance or service tasks inside the analyzer, such as replacing the laser.

Laser safety

The Antaris integrating sphere sampling module is a Class IIa (United States) and Class I (international) laser product. The accessible radiation levels are below Class IIa limits defined by the United States Department of Health and Human Services. The laser source in the analyzer is a helium/neon (HeNe) laser head. A small amount of laser radiation is combined with the energy from the white light (infrared) source in the analyzer. This energy is accessible through the integrating sphere window. In the same way you are cautioned against staring at the sun or its bright reflection, *do not stare* at the beam that exits the integrating sphere window.

If the MultiPro Autosampler is connected to the analyzer, *do not raise* the autosampler's transmission detector module while the analyzer is collecting a background or sample spectrum. Raising the detector module while the instrument is collecting data will reveal the light source.

Note For more information about laser safety and other safety issues, read the *Antaris Site and Safety Information Guide*. This guide should be read thoroughly by any person who operates and/or maintains the instrument. ▲

Installing the MultiPro

Follow the instructions in this section to install the MultiPro Autosampler on an Antaris MDS, Solid Sampling, Tablet Analyzer or RTS system. One person can install the MultiPro Autosampler. No tools are required.

Notice Because the MultiPro Autosampler has an electrical connection, we recommend that you power off the instrument while installing and removing the autosampler to avoid possible damage to the electronics. Before you power off the instrument, be sure to log off any software applications. ▲

Note If you plan to install the MultiPro Autosampler on an Antaris system that includes the ValPro® System Qualification package, stop here and follow the instructions in the *ValPro Installation Qualification Procedure for the MultiPro Autosampler* to install the autosampler and then qualify the system with the autosampler installed. The new configuration must be qualified after installing the autosampler for the first time. ▲

To install the MultiPro Autosampler:

1. **Remove the silver tray from the Antaris instrument, if the tray is installed.**

   The autosampler won't latch properly while the tray is in place. The tray attaches to the top of the instrument by magnetized strips. To remove the tray, simply lift it up and off the instrument.

2. **Remove the tablet analyzer module or any sample, sample holder or accessory from the integrating sphere and clean the integrating sphere sampling area and window.**

   See "Maintaining the MultiPro Autosampler" in this guide for instructions for cleaning the integrating sphere sampling window.

3. **Remove the carousel from the autosampler, if one is installed.**

To remove a carousel, first raise the transmission detector module. Then, using both hands, grasp the two handles on the carousel and slowly lift the carousel straight up and off the autosampler base. See "Installing and Removing a Carousel" in this document for detailed instructions.

4. **Inspect the data port on the Antaris instrument and the connector on the bottom of the autosampler.**

   Make sure there is no debris on the male connector on the autosampler and there is nothing clogging the female connector in the instrument's serial data port. If there is a clear protective cover over the data port, remove it.

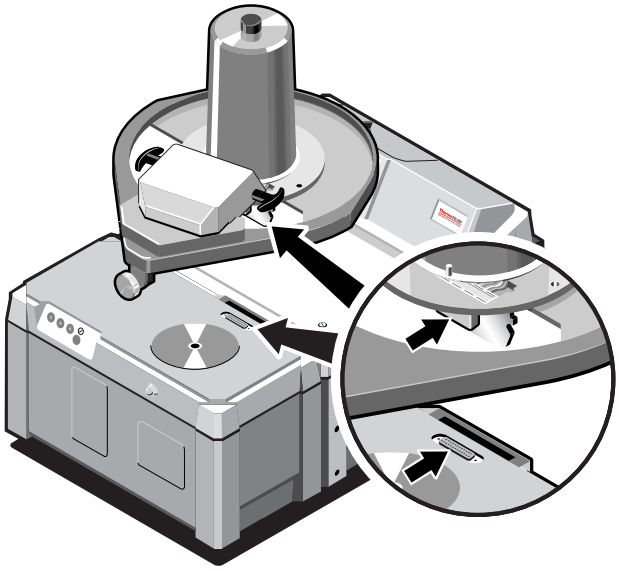

Caution If there is debris clogging the female connector on the data port, do not install the autosampler and do not unclog the connector yourself. Contact your Thermo Fisher Scientific service representative. ▲

5. **Loosen the silver thumbscrew on the autosampler base by turning it counter clockwise.**

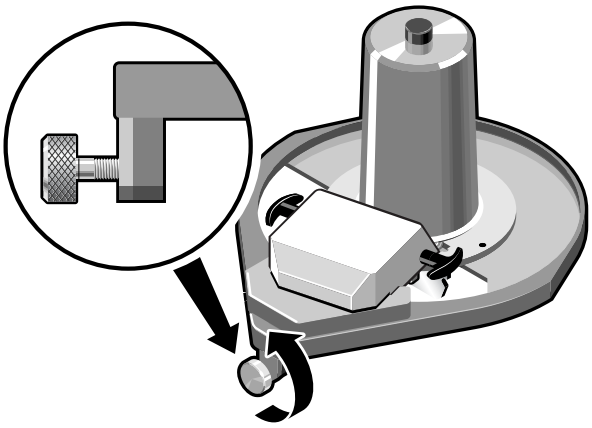

Caution Grasp the autosampler at the front and back of its base, not at the sides. The autosampler fits tightly onto the Antaris analyzer and your fingers could get pinched if you hold the sides while you lower the autosampler onto the analyzer. ▲

6. **Using both hands, lift the autosampler by the base with the thumbscrew facing you.**

   One hand should be at the back of the autosampler and the other hand at the front, near the thumbscrew. The large metal alignment tab and the electrical connector should be facing downward.

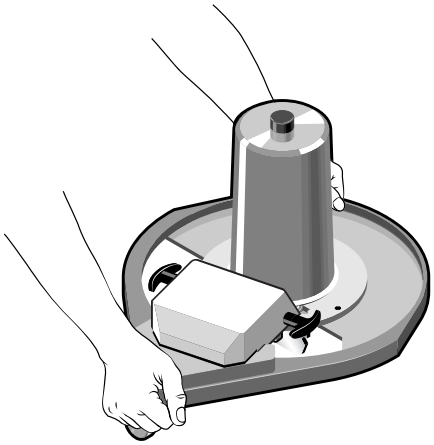

7. **Align the connectors with the slot and data port on the analyzer, as shown below.**

The autosampler is held in place by a large metal tab that fits into the slot on the top of the analyzer. The electrical connector on the autosampler base fits into the data port on the analyzer top panel.

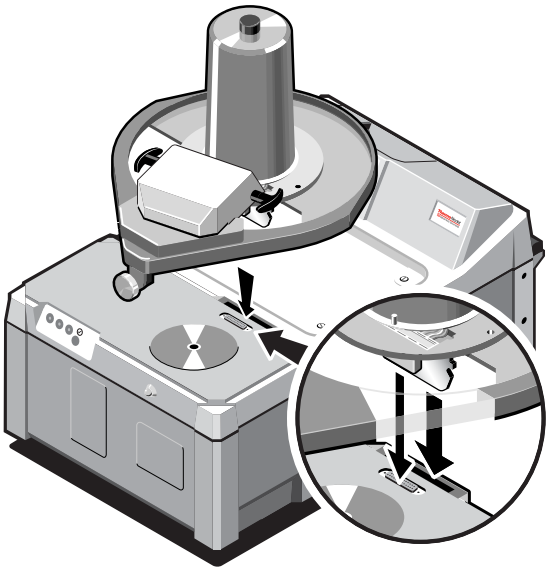

8. **Gently set the autosampler down on the top of the analyzer.**

9. **Press down on the autosampler so it sits flat against the analyzer surface.**

   The autosampler is properly connected to the electrical port when you hear it “click” in place and the autosampler is firmly seated.

   The thumbscrew should be positioned directly over the spring-loaded ball on the front of the instrument.

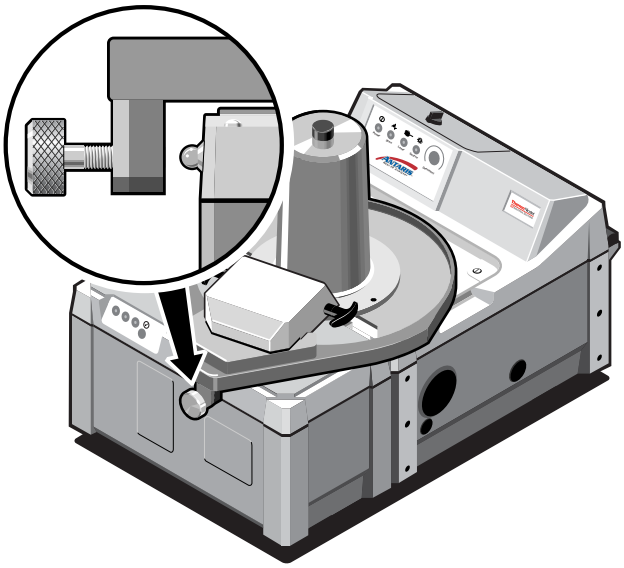

Notice Tighten the thumbscrew by hand. Tools are unnecessary and may damage the latch mechanism. ▲

10. **Turn the silver thumbscrew clockwise until the screw contacts the spring-loaded ball, and then continue tightening the knob one half to one full turn.**

    If the thumbscrew is not aligned with the ball or if the autosampler bottom is not resting flat against the top of the analyzer, remove the autosampler and attempt to install it again.

11. **Power on the instrument.**

12. **Start RESULT Operation software.**

Note If you installed the MultiPro Autosampler on an Antaris MDS or RTS system that includes the heated sample holder, keep in mind that the instrument's internal heater is disabled while the autosampler is operating. ▲

13. **Run Instrument Status to initialize the autosampler.**

    From RESULT Operation, open the Maintenance menu and choose Instrument Status. In the resulting dialog box, click Select All, turn on Save Report To Disk and choose OK.

Installing and Removing a Carousel

The MultiPro Autosampler comes with one or more interchangeable sample carousels. The carousels are available in a number of styles to accommodate a range of tablets, capsules and vials, as well as custom configurations designed to fit your sample or vial specifications. Each sample or vial fits securely into a recessed opening in the carousel so filled carousels can be transported and installed without disturbing the samples.

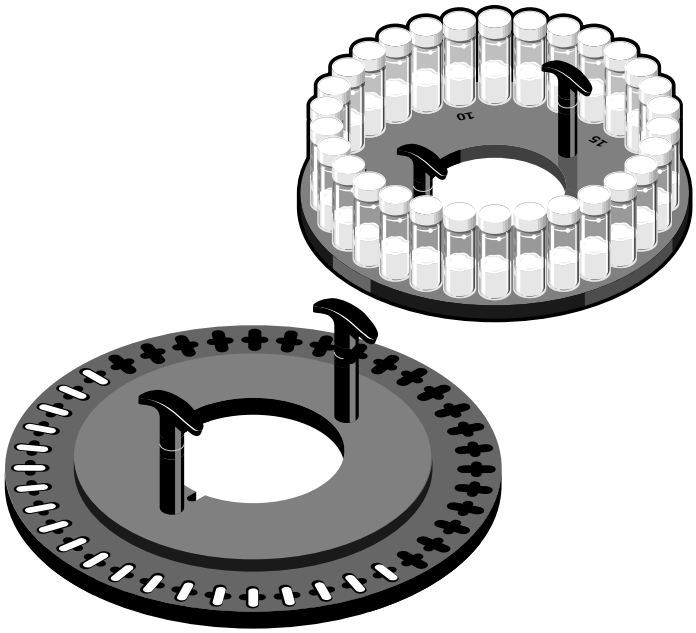

MultiPro Autosampler carousels

The carousels fit around the large hub in the center of the autosampler and glide over the autosampler base. The pin on the autosampler base must be aligned with the notch in the carousel base for the autosampler to operate properly.

The illustration below shows the location of the notch and pin.

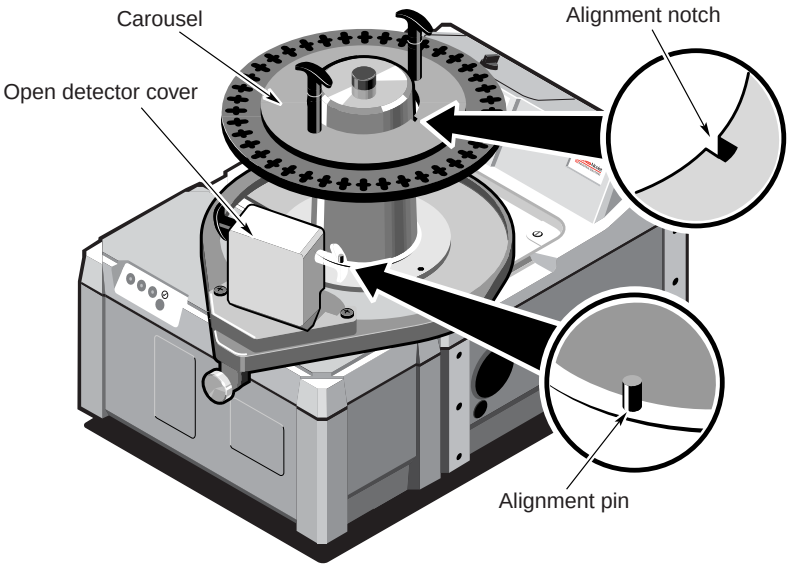

Carousel alignment

The first (zero) position in each carousel is defined as the reference position. The autosampler moves the reference position over the sampling area after the autosampler is initialized. Initialization occurs automatically when the autosampler receives the first Position Autosampler command in a workflow. The autosampler may also return to the reference position briefly after the system encounters certain workflow errors, such as an error due to a stalled carousel.

You may use the reference position for transmission background measurements and diffuse reflection backgrounds measured with an external reference sample. When using the internal gold reference for diffuse reflection background measurements, the reference position is available for additional sample measurements. See “Collecting Backgrounds” in this document for more information.

Installing a carousel

To install a carousel:

1. **Raise the transmission detector module so it is perpendicular to the autosampler baseplate.**

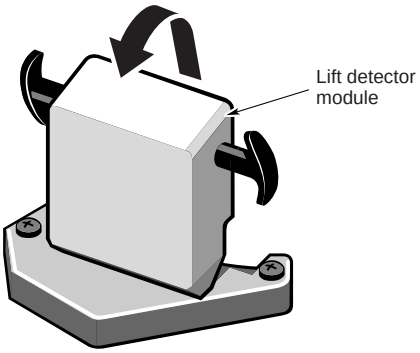

2. **Using both hands, grasp the carousel by the two handles and then slowly lower the carousel onto the autosampler base.**

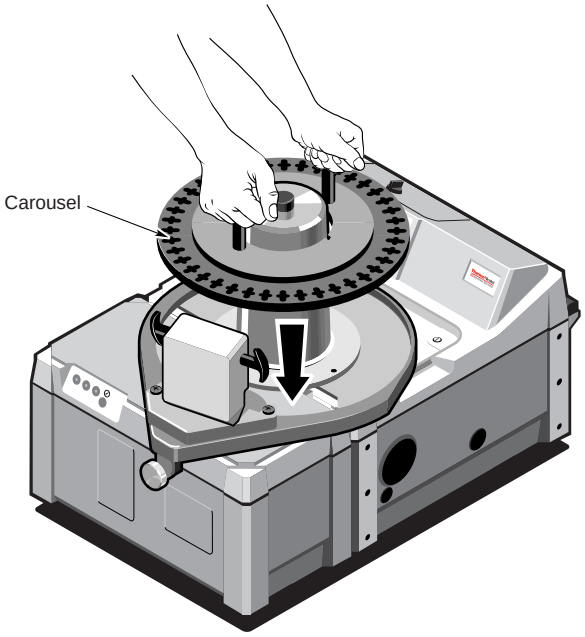

3. **Release the handles and slowly rotate the carousel until the alignment hole on the carousel base drops over the pin on the autosampler base.**

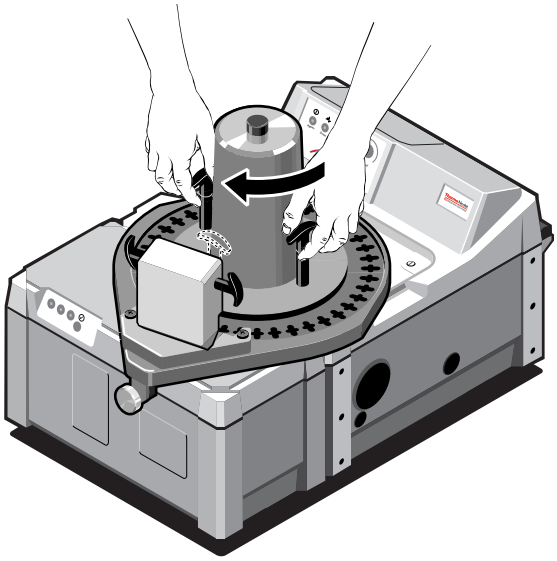

Removing a carousel

To remove the carousel:

1. **Raise the transmission detector module so it is perpendicular to the autosampler baseplate.**

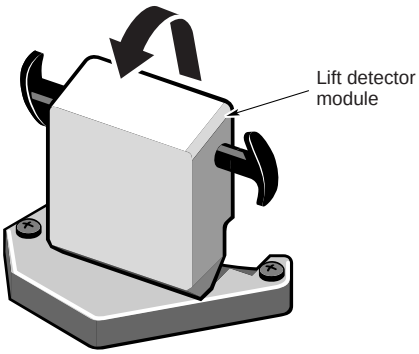

2. **Using both hands, grasp the two handles on the carousel and then slowly lift the carousel straight up and off the autosampler base.**

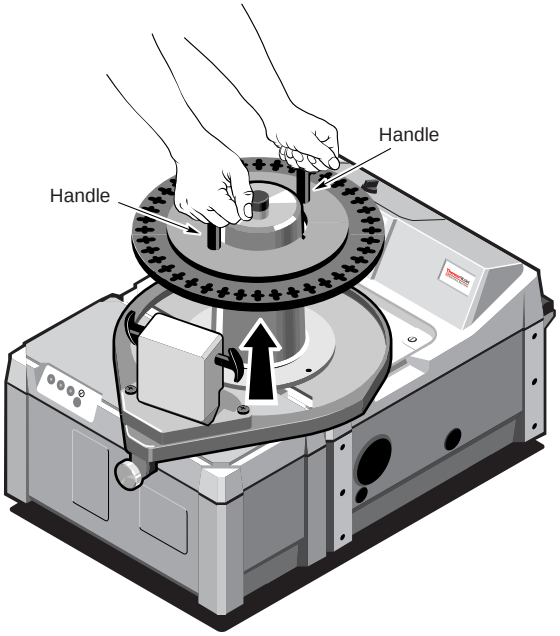

Changing the Transmission Module

The MultiPro Autosampler can be used with either of the following detectors to conduct transmission sampling experiments.

- **Standard tablet detector**. This detector is recommend for use with dense materials such as opaque tablets because it has a narrow band, high-sensitivity InGaAs detector and covers a spectral range of 12,000 – 5,880 cm-1 (833-1,700 nm).

- **Softgel capsule detector**. This detector is recommended for use with samples that are better transmitters such as softgel capsules, paper, plastics, packaging materials, and polymers. It has a broad-band *InGaAs detector* and covers a spectral range of 12,000 – 3,800 cm^{-1} (833-2,630 nm).

Read this chapter to learn how to install and remove the transmission module for the MultiPro Autosampler. Because the two modules are similar to each other in appearance and fit on the autosampler the same way, you can follow the same procedure to install and remove either module. The modules are held in place by two alignment pins and two screws.

You will need a No. 2 Phillips-head screwdriver to remove or install a transmission module. The modules are easiest to install and remove while the autosampler is secured to the Antaris analyzer.

Notice Because the transmission module has an electrical connection, we recommend that you power off the analyzer while installing and removing the module to avoid possible damage to the electronics. Each time you power off the instrument, be sure to log off any software applications. ▲

Removing a transmission module

To remove a transmission module:

1. **Use a No. 2 Phillips-head screwdriver to loosen the two captive screws that secure the transmission module to the MultiPro Autosampler.**

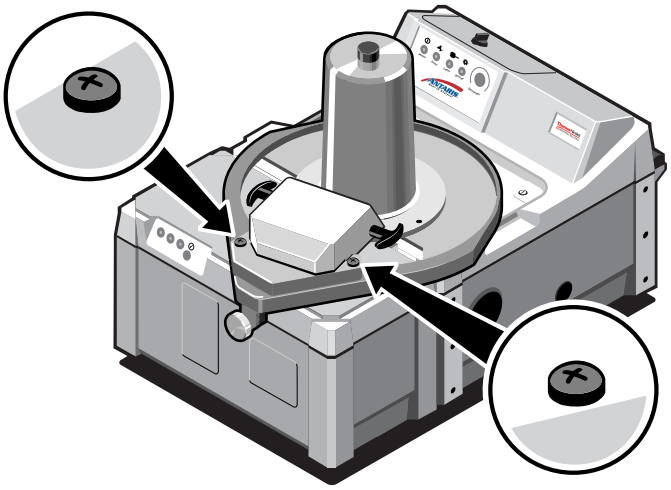

2. **Raise the detector so it is perpendicular to the autosampler baseplate.**

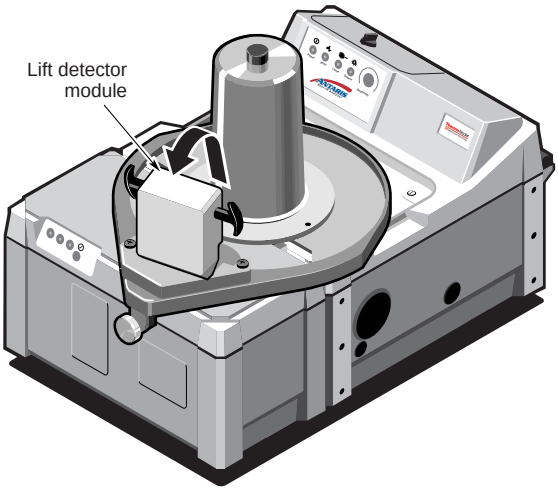

3. **Using both hands, grasp the handles on both sides of the detector housing and carefully pull up on the transmission module to detach the connector from the data port.**

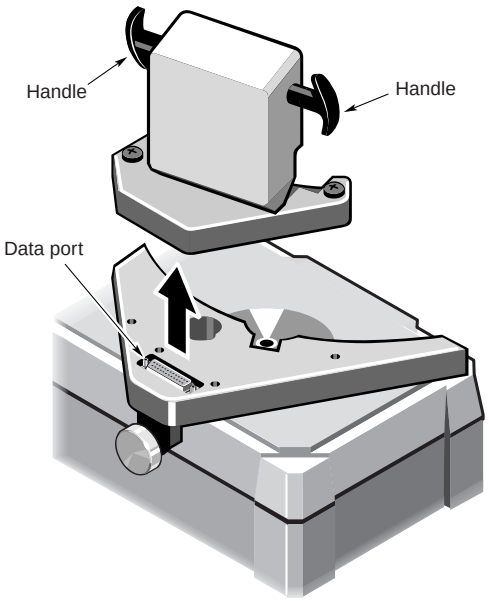

Notice The transmission detector is protected by a sapphire window. Although sapphire is strong and scratch resistant, very harsh abrasive substances may scratch the window. If you remove the transmission module, protect the window from abrasive substances and be careful not to drop the transmission module. ▲

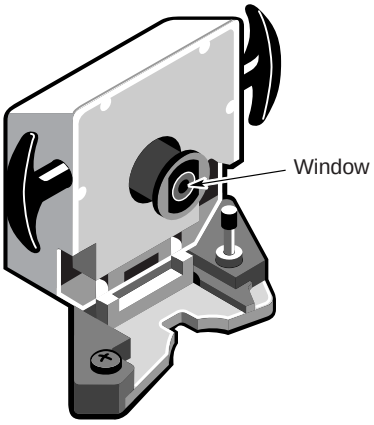

Installing a transmission module

To install a transmission module:

1. **Inspect the electrical connectors.**

   Make sure there is no debris on the male connector on the transmission module and there is nothing clogging the female connector on the MultiPro Autosampler.

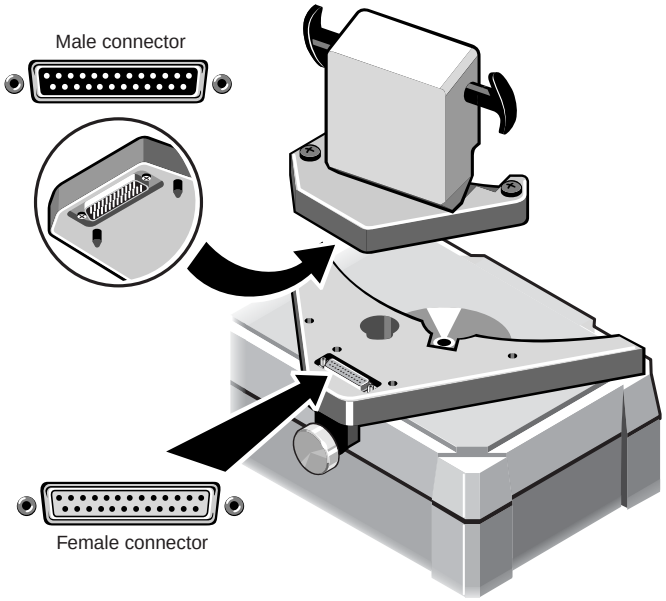

Caution If there is debris clogging the female connector on the autosampler, do not unclog the connector yourself. Contact your Thermo Fisher Scientific service representative. ▲

2. **Make sure the detector is positioned perpendicular to the autosampler baseplate.**

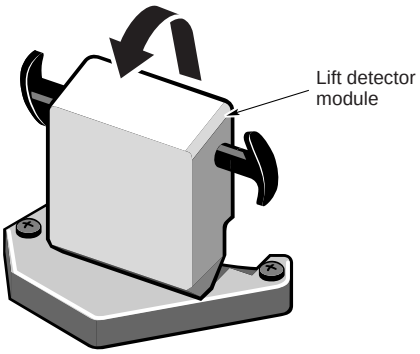

3. **Line up the two pins and the male connector on the bottom of the transmission module with the two alignment pin holes and the female connector on the autosampler.**

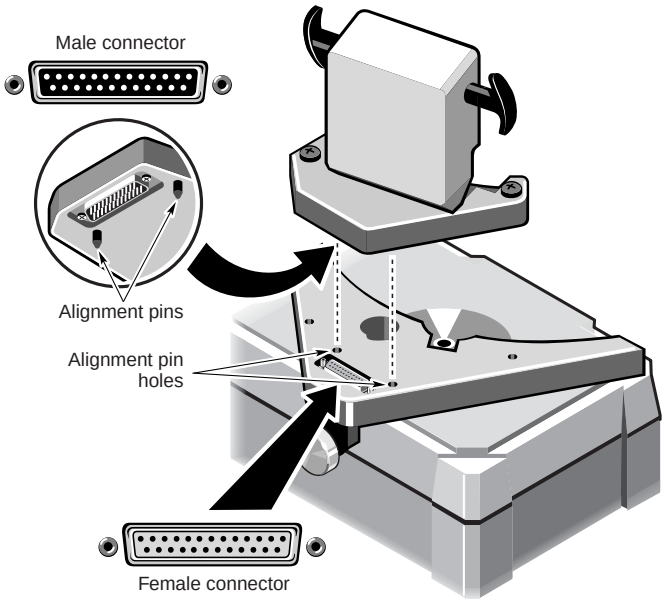

4. **Grasp the handles on both sides of the transmission module and press downward until the module is properly connected to the electrical port.**

   The transmission module is properly connected to the electrical port when you hear it "click" in place and the module is firmly seated on the autosampler.

5. **Lower the detector.**

6. **Use a No. 2 Phillips-head screwdriver to tighten the two captive screws that secure the transmission module to the MultiPro Autosampler.**

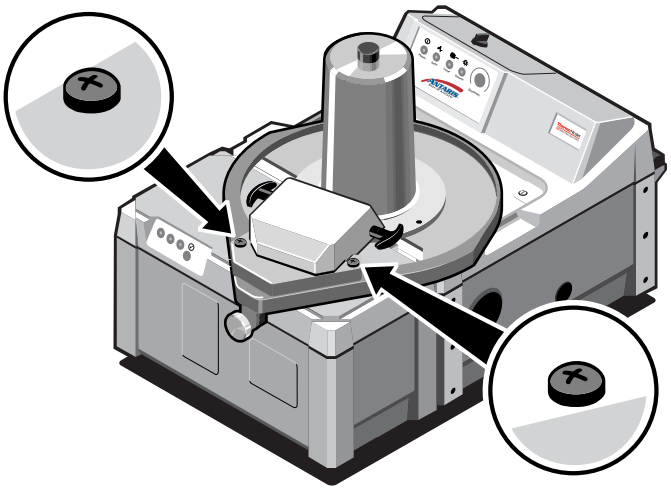

Testing the MultiPro

After you finish installing the MultiPro Autosampler, you can run one of the test workflows to verify that the autosampler is working properly. The workflows test transmission data collection, the positional software commands and the autosampler mechanics.

You will need a 40-position carousel and a set of 39 samples to run the test workflow. You must have a transmission module installed on the autosampler to run the test workflow. There are two types of transmission modules and a test workflow for each of them. If you have both transmission modules, you should test them both.

The test workflow files are named:

MultiPro Autosampler tablet basic.wfl – Use this workflow if the standard tablet transmission module is installed on the autosampler.

MultiPro Autosampler softgel basic.wfl – Use this workflow if the autosampler is fitted with the softgel transmission module.

The workflow files are included on the RESULT software CD (RESULT software suite revisions 2 and higher) and should have been loaded into the RESULT Data\Workflows directory during the software installation.

You can run the test workflows from RESULT Operation or RESULT Integration software. This section explains how to run the test workflow from RESULT Integration. To learn how to run workflows from RESULT Operation, see the "RESULT Operation Software" section of your *Antaris User's Guide*.

Before you begin:

- Raise the transmission module cover and then install a 40-position carousel on the autosampler. Insert a sample in positions 1 through 39. We suggest using opaque tablets that fit the carousel openings. Leave the reference (zero) position blank for the background measurement. When you are finished, lower the transmission module cover.

- If you are using the tablet (standard) transmission module, run Quick Collect in the Tools menu and use Optimize Gain to determine the recommended gain and attenuator screen settings for your samples. When you are finished, make sure the gain and attenuation are set correctly in the test workflow. The Gain and Attenuator workflow parameters are available on the sample specification, which is linked to the Collect event. If you need help using Quick Collect or finding the sample specification, see your Antaris User's Guide.

To run the autosampler test workflow from RESULT Integration:

1. **Start the RESULT Integration application.**

   See the "RESULT Integration Software" section of your *Antaris User's Guide* if you need help locating or starting the application.

2. **Raise the transmission detector and then install a 40-position carousel on the autosampler.**

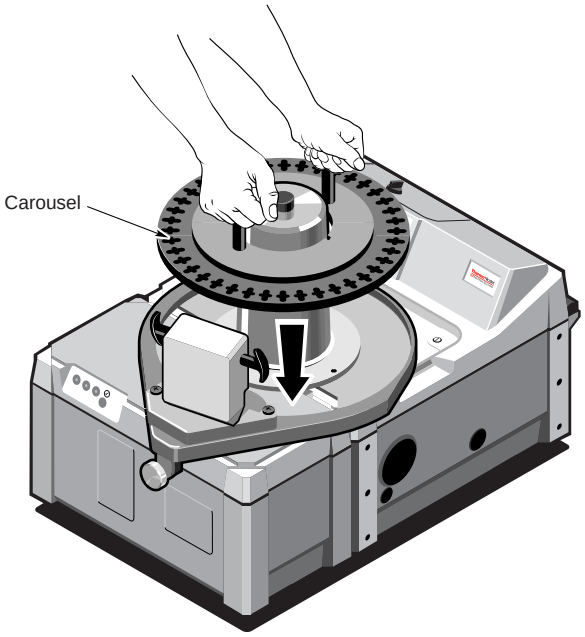

3. **Insert a sample in positions 1 through 39.**

   The recommended sample material depends on the transmission module installed on the autosampler. If the standard tablet transmission module is installed, you can use any kind of opaque

material such as a pharmaceutical tablet. The softgel transmission module is optimized for use with materials that are less opaque such as a softgel capsule. See “Compatible Samples” in this document for example of materials you can analyze with each transmission module.

The samples should fit the carousel openings snugly and stay within the boundaries of the transmission sampling window on the underside of the detector module.

Leave the reference (zero) position blank for the background measurement.

4. **Lower the transmission detector.**

5. **Use Quick Collect to determine the recommended gain and attenuator screen settings for your samples.**

   a. Raise the transmission detector and make sure a sample is positioned under the sampling window. If the position is blank, move a sample to that location temporarily so you can run the test. When you run Quick Collect with an autosampler, the software simply lowers the transmission detector sampling window over the current sample; it cannot move the autosampler to position a specific sample in the infrared beam.

   b. Choose Quick Collect from the Tools menu to display the Quick Collect window.

   c. In the Quick Collect window, choose Optimize Gain.

      The software collects a series of spectra with various gain and attenuator settings and then selects the combination that produces the strongest signal. The attenuator wheel and gain settings are displayed in a window.

   d. When the test is completed, record the recommended Wheel and Gain settings displayed at the bottom of the Optimize Gain window.

e. If you had to move one of your samples to run Quick Collect, raise the transmission detector, move the sample back to its previous location and then lower the detector.

   If you need help using Quick Collect, see your *Antaris User's Guide*.

6. **Choose Open Workflow from the File menu in the RESULT Integration main window.**

7. **Find the directory for storing workflows, select the workflow MultiPro Autosampler softgel basic.wfl (or MultiPro Autosampler tablet basic.wfl) and then choose Open.**

   After you open the workflow, its contents appear in the workflow navigation frame in the RESULT Integration main window.

8. **Make sure the gain and attenuation are set correctly in the test workflow.**

   a. In the workflow navigation frame, select the Collect event.

   b. In the Collect event parameters, choose the Details button located to the right of the Sample Specification list box.

   c. In the Sample Specification parameters, set the Gain and Attenuator parameters according to the recommended gain and attenuation wheel settings provided in step 5 above.

9. **Choose the Test button on the RESULT Integration toolbar to display the Run Time Test window.**

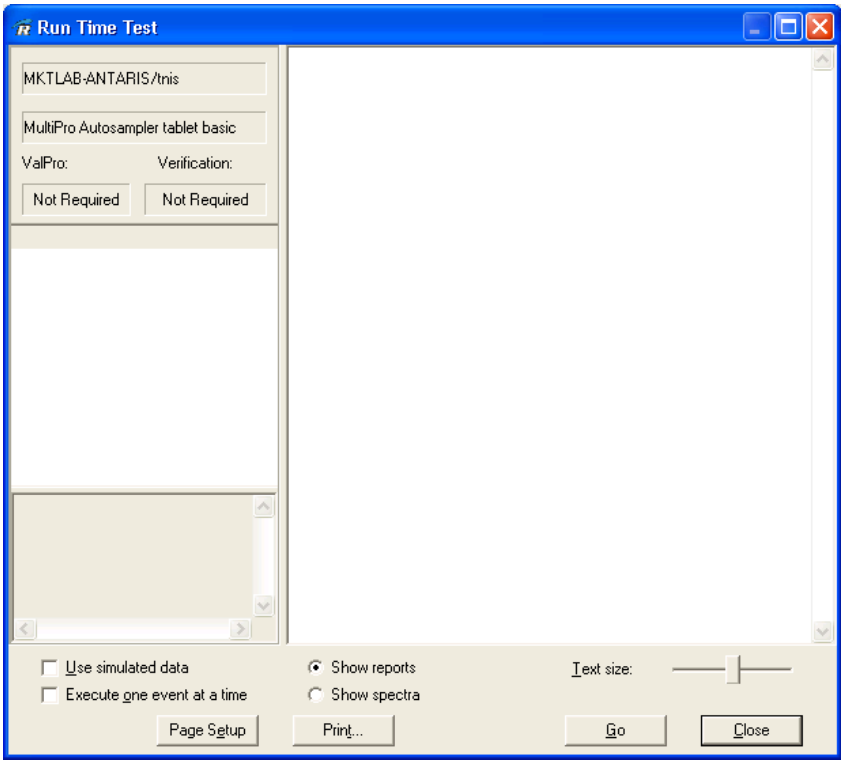

10. **In the Run Time Test window, choose Go to start the workflow.**

The workflow begins by positioning the reference position (labeled "0" on the autosampler carousels) in the infrared beam and then collecting a transmission background spectrum. Then it moves the carousel to the first sample position, collects a sample spectrum, saves the spectrum in a report and archives the spectrum and the report. This process is repeated for each remaining sample in the carousel.

The test workflow takes about 5 minutes to complete. The sample spectra are displayed in a series of sample reports, similar to the example shown below.

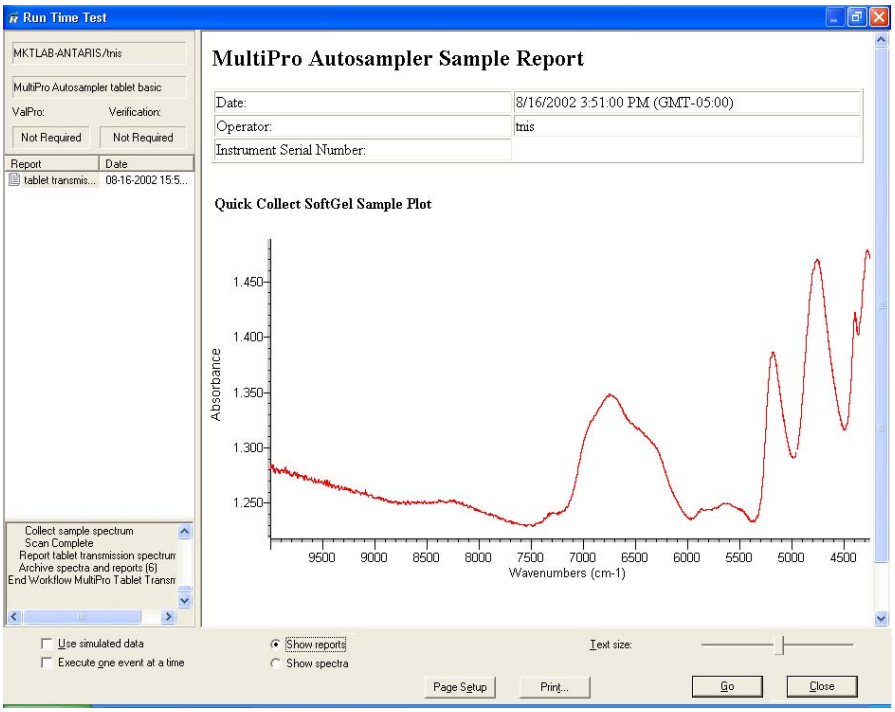

If errors occur in the autosampler mechanics during the test workflow, for example if something interferes with the carousel rotation or if the detector is not positioned over the sample, the workflow displays a workflow error similar to the one shown below:

Errors While Running Workflow MultiPro Tablet Transmission

Event Name	Error Description
Collect tablet transmission spectrum	Unable to correctly position the motorized detector. Make sure the detector cap is down.
Collect tablet transmission spectrum	Unable to complete data collection due to one or more of the following: the computer/analyzer communication failed, a system fault occurred or an invalid background was collected.

Workflow errors can be viewed in the display area of the RESULT Integration main window after the workflow ends or stops running.

To continue the test, remove the obstruction or lower the detector and then restart the workflow.

Sampling Techniques

When the MultiPro Autosampler is installed on an Antaris instrument, the system allows both diffuse reflection and transmission analysis of each sample. The system collects diffuse-reflection data using the Antaris integrating sphere detector. Transmission sampling occurs through the transmission module mounted on the MultiPro Autosampler. Your autosampler may have the tablet transmission detector for dense materials, the softgel transmission detector for samples that transmit more light, or both if you purchased a second module.

Both diffuse reflection and transmission sampling using the MultiPro Autosampler are fast and easy because little or no sample preparation is required. RESULT software allows you to perform both types of sampling in one workflow.

Diffuse reflection

Diffuse reflection is a powerful technique for Fourier transform near infrared (FT-NIR) analysis of rough-surfaced solids, fine particles, and powders.

Diffuse reflection measures the changes that occur in an infrared beam when the beam interacts with a particulate sample. When directed onto a surface, the infrared radiation will interact with the surface by alternately passing through it and reflecting off it. This causes the light to scatter, or "diffuse," as it makes its way through the sample.

The Antaris integrating sphere architecture simplifies diffuse reflection measurements. As shown below, the beam is angled into the sphere and travels directly through its center, through the sapphire window, and into the sample. The beam scatters off the sample and the reflected light beams reenter the sphere. The inside of the sphere is coated with diffuse gold, which collects the light beams and directs them onto the detector.

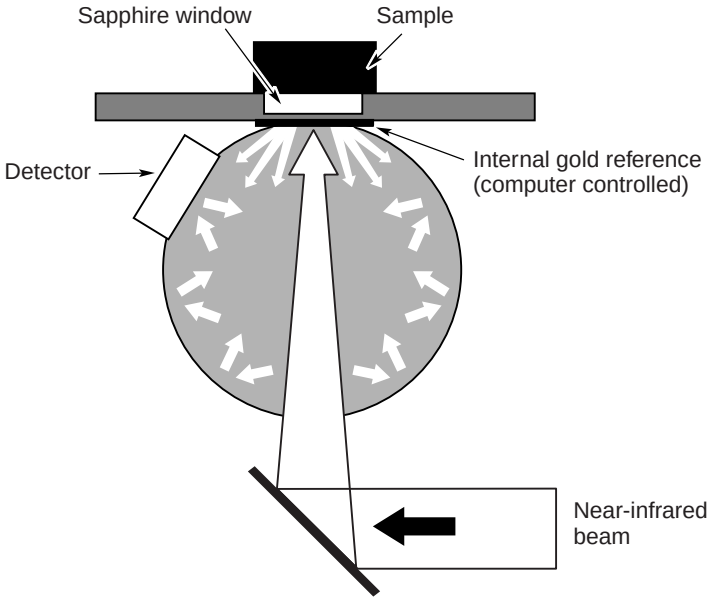

Diffuse reflection sampling with the Antaris integrating sphere

Transmission

Transmission measures the percentage of light transmitted through a sample. When using the MultiPro Autosampler transmission module, the Antaris instrument directs the infrared beam into the integrating sphere. The beam passes through the sapphire window above the integrating sphere and into the sample, which absorbs specific frequencies. The light that passes through the sample is directed to the transmission detector, as shown below.

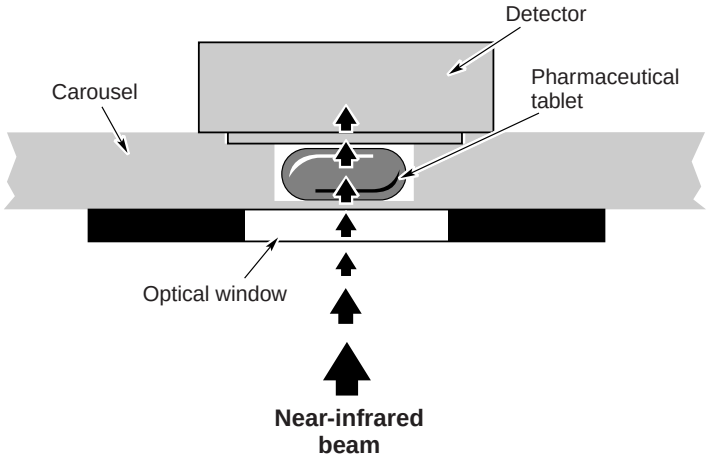

Transmission sampling with the MultiPro Autosampler

Transmission is a powerful technique for FT-NIR analysis of tablets, because it can provide complimentary information to diffuse reflection sampling.

Using both diffuse reflection and transmission

Diffuse reflection and transmission can give complementary information in an experiment. The MultiPro Autosampler along with RESULT software allow you to use one workflow to combine both transmission and diffuse reflection sampling without the need to reposition your sample.

Combining the data collected from diffuse reflection (the amount of light reflected off a sample) with the data collected from transmission (the amount of light that passes through the sample) accounts for greater accuracy in the results produced from your experiments. The two sampling techniques work especially well with layered samples, such as a coated tablet. The diffuse reflection experiment can provide you with a spectrum of the outer coating, and the transmission experiment can provide you with spectral information about the tablet's internal composition.

Compatible Sample Types

The MultiPro Autosampler is designed for automated transmission and diffuse reflection measurements of industrial samples. Depending on the sampling technique and detector, the autosampler can be used with tablets, capsules and other small solids as well as powders and solids that are contained in vials. The autosampler interfaces with the Antaris integrating sphere sampling module for diffuse reflection measurements. Transmission measurements are taken with the autosampler transmission module.

Samples for transmission and reflection analysis

The MultiPro Autosampler was developed for transmission and diffuse reflection experiments of pharmaceutical tablets and softgel capsules. However, it can also be used with small solids that are compatible with your autosampler carousels such as packaging materials, polymers, and paper. Compatible sample types vary depending on whether you are using the tablet or softgel transmission module.

- **Standard Tablet transmission module**. The tablet transmission module has a high-sensitivity detector but a narrower spectral range. It works well for strongly absorbing or thick materials such as opaque tablets or heavy bond paper.

- **Softgel transmission module**. The softgel transmission detector has a wider spectral range. It works well for thinner or less absorbing materials such as softgel capsules, paper, plastics, packaging materials, and polymers.

The items compatible with the softgel transmission module can also be used in the tablet module, but the spectral range will be limited to approximately 12,000 – 5,880 cm^{-1} when using the tablet module. All of these sample types may also be used for diffuse reflection analysis.

Samples for reflection analysis only

With the transmission module disengaged or removed from the MultiPro Autosampler, you can use the autosampler with the integrating sphere to measure a wide variety of samples that can't be measured by transmission. Because the integrating sphere uses diffuse reflection spectroscopy, it is useful for analyzing powders or "rough" solids. The following are some examples of sample types that can be used with the integrating sphere:

- Powders in vials
- Solids with a rough or diffuse surface, such as coated textiles, paper, wood, polymers, and plastics (especially plastics with a milky, opaque appearance)
- Tablets with reflective surfaces
- Opaque liquids and gels.

Note Because clear gels and liquids are not "diffuse," we do not recommend using them with the integrating sphere. ▲

Depending on the configuration of your carousels, compact solids can usually be placed directly into the carousel openings and analyzed with the integrating sphere. Other solids and powders can be analyzed by placing them in clear glass or plastic vials. The samples or vials must be an appropriate diameter to fit the openings in your carousel.

When using the integrating sphere, consider sample thickness or the amount of sample used for the analysis. If a solid sample is too thin or if there is not enough of a powder sample, you may encounter problems with the spectra. See "Common Problems with Spectral Data" in the "Integrating Sphere Sampling Module" chapter of your *Antaris User's Guide* for more information about sample thickness and sample amount.

Collecting Backgrounds

A background is a reference spectrum that accounts for the unique optics of the sampling module and the instrument. Each sample spectrum is ratioed against a background so the final spectrum is free of these features. When using the MultiPro Autosampler, you can collect backgrounds using an internal or external reference sample or no reference sample, as directed by the workflow you are running.

The workflow will specify how often to collect a background spectrum. You can set up a workflow to collect a background before every sample, before the first sample in a carousel, or after a specified period. See "Collect events" in the "RESULT Integration Software" section of your *Antaris User's Guide* for details about specifying the frequency of background collections in workflows. The most recent background spectrum remains in memory and is compared against sample data until the system collects a new background spectrum.

Depending upon the workflow, you may or may not be prompted to begin background data collection. Because the MultiPro Autosampler positions samples and background references automatically, workflows designed to run the autosampler are typically set up to collect sample and background data without requiring any operator interaction. However, if you want to run transmission and diffuse reflection experiments on the same set of samples and need to use an external reference sample for diffuse reflection background measurements, the workflow must prompt the operator to insert the background reference sample into the carousel reference position before diffuse reflection background collection begins. Another prompt must remind the operator to remove the reference sample after background collection is completed.

The "Common Problems with Spectral Data" section of the "Integrating Sphere Sampling Module" chapter of your *Antaris User's Guide* contains suggestions if a background spectrum is atypical from previously collected background spectra.

Transmission backgrounds

The transmission module must be connected to the MultiPro Autosampler before collecting background data for transmission experiments. You can use either style transmission module for background collections, for example the module that is optimized for opaque tablets or the module optimized for softgel capsules. Make sure you use the same transmission module that will be used to collect the sample data.

Transmission backgrounds can be collected by performing the collection on an empty position in the autosampler carousel. We do not recommend using a background reference sample for background collections in transmission experiments.

To set up a workflow to collect a transmission background spectrum, remove any sample from the reference (zero) position of the carousel and make sure both the workflow and your collection event are set up to collect backgrounds from the reference position. If the workflow must analyze samples contained in multiple carousels, make sure you also remove any sample from the reference position of each additional carousel.

The autosampler specification defines how the reference carousel positions are used in a workflow. When collecting transmission backgrounds, make sure the autosampler specification has the Reference (Zero) Position Reserved For Background Collections check box selected, as shown below:

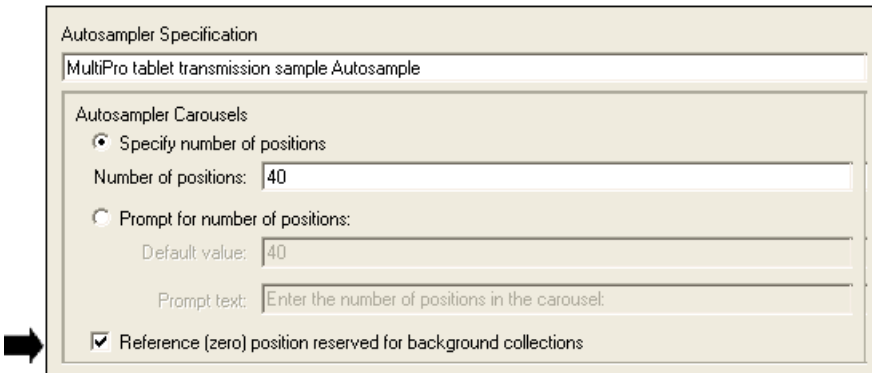

When this check box is cleared, the software regards the reference position as the first sample position in each carousel.

The background specification defines the location for background collection for a particular collection event in a workflow. To set up a workflow to collect transmission backgrounds from the reference carousel position, link one of the transmission background specifications (tablet or softgel) to your collection event and make sure the background specification has Collect Background From Same Position As Sample cleared, as shown below:

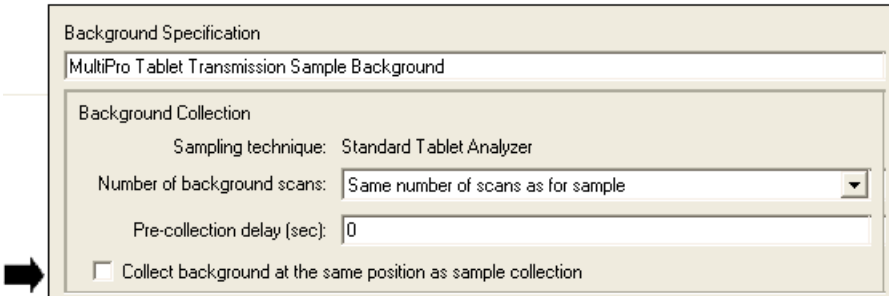

See “Developing Workflows for the MultiPro Autosampler” in the next chapter for more information.

The green indicator on the instrument will be on when the instrument is ready to begin collecting the background. You will see the carousel move the reference carousel position to the transmission module. The transmission detector should be down. The status indicator in the software will display the status of the data collection.

⚠ Caution Do not interfere with the carousel or lift the transmission detector while the instrument is collecting data. Raising the detector before the instrument has finished collecting data will affect your background spectrum. ▲

A typical background spectrum using the tablet transmission module should resemble the following:

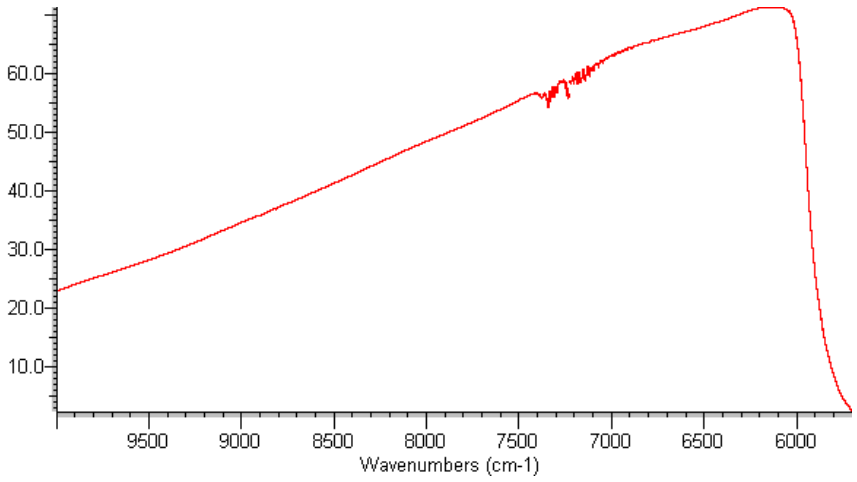

Typical background spectrum with the tablet transmission module

A typical background spectrum using the softgel transmission module should resemble the following:

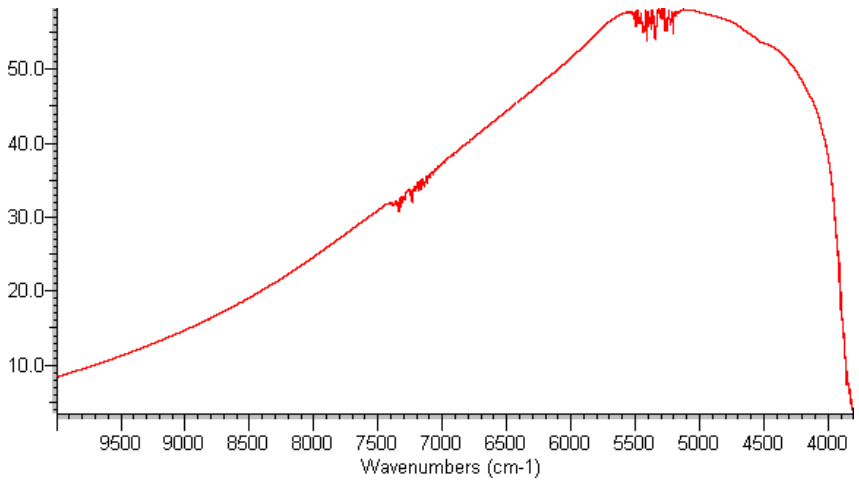

Typical background spectrum with the softgel transmission module

See the "Common Problems with Spectral Data" section in the "Tablet Analyzer Sampling Module" chapter of your *Antaris User's Guide* if your background spectrum is not similar to one of the above, or if it is atypical from previous background spectra.

Diffuse reflection backgrounds

Background measurements for diffuse reflection experiments can be taken using the Antaris integrating sphere's internal diffuse gold reference, or by using an external reference sample such as Spectralon®. When collecting a diffuse reflection background, the autosampler transmission module can be in any position or removed from the autosampler.

Using the internal reference

If collecting a background using the internal diffuse gold reference, it is not necessary to add a background reference sample to the autosampler carousels.

To set up a workflow to collect diffuse reflection backgrounds from the internal gold reference, link an autosampler integrating sphere background specification to your collection event and make sure the background specification has Location set to the Internal Gold Reference option, as shown below:

Using the internal reference for background collection leaves the carousel's reference (zero) position available for sample collection. If you are running diffuse reflection experiments only and you want to place a sample in position 0, make sure the autosampler specification has the check box labeled "Reference (Zero) Position Reserved For Background Collections" cleared. See "Autosampler specifications" for more information.

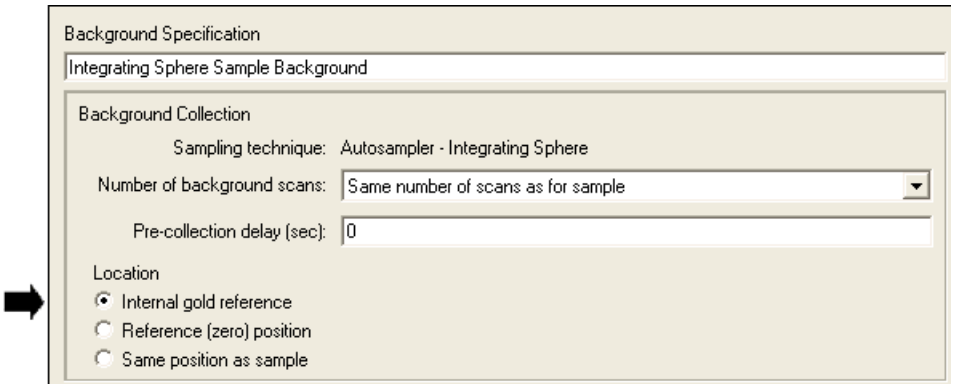

See "Developing Workflows for the MultiPro Autosampler" in the next chapter for more information.

The internal gold reference is mounted on a software-controlled arm that swings the internal reference into and out of the near-infrared beam. Normally, the reference is located in the beam except when the system is collecting sample data or data from an external background reference. When collecting a background from the internal gold reference, the gold reference stays in the beam and background collection begins immediately. The status indicator in the software shows you the status of the background collection.

A typical background spectrum using the internal diffuse gold reference should resemble the following:

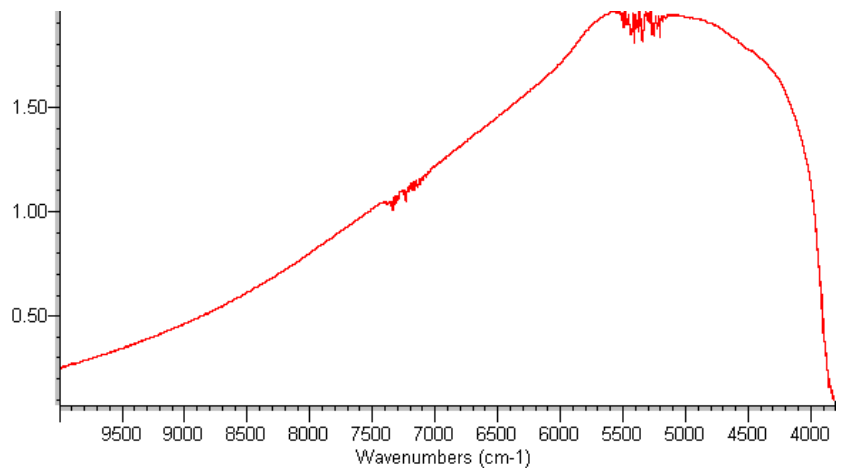

Typical diffuse gold background spectrum collected with the integrating sphere

See the "Common Problems with Spectral Data" section in the "Integrating Sphere Sampling Module" chapter of your *Antaris User's Guide* if your background spectrum is not similar to the above spectrum, or if it is atypical from previous background spectra.

Using an external reference

If collecting a diffuse reflection background using an external reference, place the background sample in the reference (zero) position of the autosampler carousel and make sure both the workflow and your collection event are set up to collect backgrounds from the reference position. If the workflow must analyze samples contained in multiple carousels, place a duplicate background sample in the reference position of each carousel. The background sample should fit the carousel openings snugly.

Some examples of materials that can be used as an external background sample include:

- Diffuse gold
- Spectralon, which is a very diffuse substance with high reflectance
- Ceramic.

The autosampler specification defines how the reference carousel positions are used in a workflow. If the reference position contains background material, make sure the autosampler specification has the Reference (Zero) Position Reserved For Background Collections check box selected, as shown below:

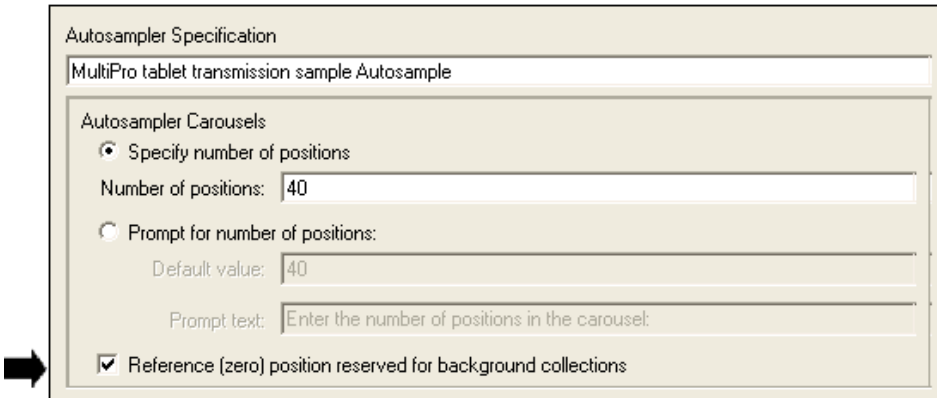

When this check box is cleared, the software regards the reference position as the first sample position in each carousel.

The background specification defines the location of the background material for a particular collection event in a workflow. To set up a workflow to collect diffuse reflection backgrounds from background samples located in the reference carousel position, link an

Autosampler Integrating Sphere background specification to your collection event and make sure the background specification has Location set to the Reference (Zero) Position option, as shown below:

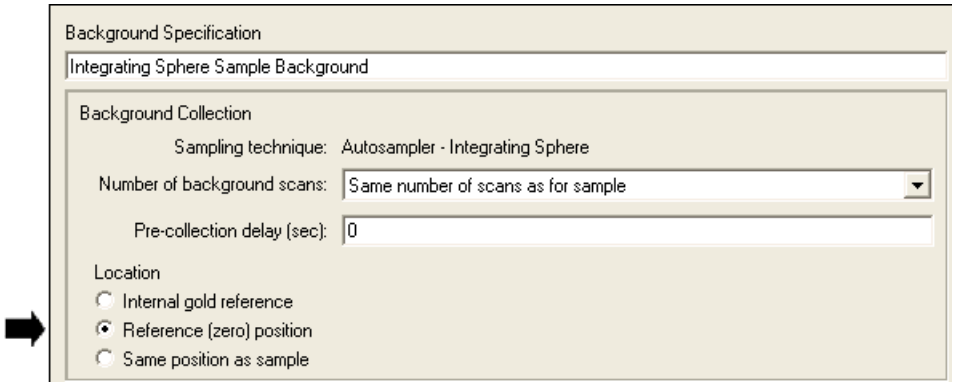

See “Developing Workflows for the MultiPro Autosampler” in the next chapter for more information.

Your workflow or an instruction document attached to the workflow should have information about preparing the background reference. See “Chapter 2 Running Workflows” in the “RESULT Operation Software” section of your *Antaris User’s Guide* for more information about viewing instructions attached to workflows.

The green indicator on the instrument will be on when the instrument is ready to begin collecting the background. You will hear the flag under the integrating sphere window “click” open as the software moves the internal gold reference out of the near-infrared beam. The status indicator in the software will display the status of the data collection. Do not interfere with the carousel while the instrument is collecting the background data. When the instrument has finished collecting the background data, the flag under the integrating sphere will “click” closed.

Backgrounds for transmission and reflection analysis

If you want to run transmission and diffuse reflection experiments from one workflow, you must include two collection events with their associated sample and background specifications. One collection event will be used for the transmission experiment and one for the diffuse reflection experiment.

To configure the transmission collection event, link it to an autosampler transmission module sample and background specification. Set up the background specification to collect transmission backgrounds from the reference (zero) position in the autosampler carousels (make sure the Collect Background From Same Position As Sample check box is cleared on the background specification).

To configure the diffuse reflection collection event, link it to an autosampler integrating sphere sample and background specification. To set up the background specification, consider the type of background data you need.

- If you can use the internal gold reference for diffuse reflection background collections, set the Location parameter to the Internal Gold Reference option on the background specification.

- If you need to use an external reference sample for diffuse reflection background measurements, set the Location parameter to the Reference (Zero) Position option. Then use the Before Background and Before Sample operator prompts in the Collect event to inform the operator when to insert and remove the reference sample. For example, the Before Background prompt should tell the operator to insert the external reference sample in position zero before background collection can begin. When background collection is completed, the Before Sample prompt should ask the operator to remove the reference sample before the workflow can continue. This will allow transmission background collections through the empty reference position.

Developing Workflows for the MultiPro

You can operate the MultiPro Autosampler using workflows developed in RESULT Integration software. The workflows can be run in RESULT Integration or RESULT Operation software. You can set up workflows to collect and analyze transmission and diffuse reflection data from any number of samples and in any sequence. Analysis results can be reported for each sample or with statistical data for an entire batch.

This section explains the workflow events and specifications that are specific to Antaris sampling accessories and the MultiPro Autosampler, including:

- Autosampler specifications
- Position Autosampler events
- Collection events for transmission and diffuse reflection experiments
- Sample specifications for collecting transmission and diffuse reflection spectra
- Background specifications for collecting transmission and diffuse reflection background spectra
- Processing events.

It also provides a brief tutorial to help you add collection events that run the MultiPro Autosampler from a workflow. For detailed information about creating and running workflows using RESULT software, see your *Antaris User's Guide*.

Note These software features are available in RESULT software only when the software includes the MultiPro Autosampler add-in option (RESULT versions 1.2 and higher) . See *Installing Your Software* for information about installing the MultiPro Autosampler add-in option. ▲

Autosampler specifications

The autosampler specification defines the maximum number of samples that fit in the autosampler carousels and specifies whether the reference position in each carousel is reserved for background measurements. You can specify the maximum number of samples when you set up the workflow, or configure the workflow to prompt the operator to enter the number of samples in each carousel at run time.

Autosampler specifications may be linked to Position Autosampler events and autosampler sample specifications in a workflow.

Associated events: Position Autosampler events

Associated specifications: Autosampler Tablet Transmission Module sample specifications, Autosampler SoftGel Transmission Module sample specifications, Autosampler Integrating Sphere sample specifications

Related events: None

Related specifications: Standard Tablet Analyzer background specifications, SoftGel Tablet Analyzer background specifications, Autosampler Integrating Sphere background specifications

Parameters: The illustration below shows the parameters for the autosampler specification. These parameters appear in the display area of RESULT Integration software when an autosampler specification is selected in a workflow.

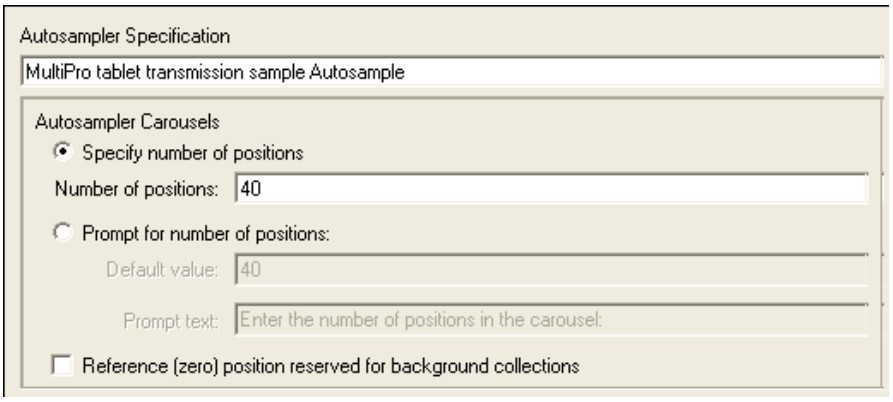

Autosampler Specification parameters

The following sections explain the autosampler specification parameters in detail. The parameters are explained in the order in which they appear in the software.

Autosampler Carousels

Use this parameter to define whether the workflow or the operator will specify the number of positions in the autosampler carousels.

- **Specify Number Of Positions.** Select this option if you want to set up workflows that match a certain carousel type. Then enter the number of sampling positions in each carousel in the associated entry box as shown in the example below.

  Specify number of positions
  Number of positions: 40

  Workflows set up this way can accurately track sample position only when used with the specified carousel type.

- **Prompt For Number Of Positions.** Select this option if you want to allow the operator to specify the number of positions in the carousels at run time. Then enter a default value in the associated entry box and the text for the operator prompt in the Prompt Text box, as shown below.

  Prompt for number of positions:
  Default value: 40
  Prompt text: Enter the number of positions in the carousel:

  The workflow will display the prompt the first time it encounters this autosampler specification. Workflows set up this way can be used with any type of carousel.

Reference Position Reserved For Background Collections

Use this check box to specify whether the reference (zero) position of each carousel will be reserved for background collections. Background collections that require the reference position include all transmission backgrounds and diffuse reflection backgrounds that require an external reference sample.

☑ Reference (zero) position reserved for background collections

When this check box is selected, the software collects all background spectra from the reference position in the autosampler carousels.

Clear the check box if you are running diffuse reflection experiments only and using the internal gold reference for collecting backgrounds and you want to maximize the number of samples in each sample holder or carousel (you can use the reference position to analyze one additional sample).

Position Autosampler events

The Position Autosampler event instructs the workflow to rotate the specified autosampler to another position or to prompt the operator to change the autosampler carousel. Depending upon the autosampler type and the number of positions in each carousel, you can configure a Position Autosampler event to move the autosampler to the next sequential position, the reference position, a specific position number, the next position in a predefined sampling sequence, or the position specified by the operator at run time.

Each time a workflow performs a Position Autosampler event, the software moves the carousel to the specified position or prompts the operator to change the carousel and then moves the new carousel to the specified position. The workflow automatically generates Position Autosampler event results containing the current carousel position number and the cycle number, if using multiple carousels. Those results can be added to subsequent events in the workflow such as a Report event. You can configure the Position Autosampler event to retain the current position and cycle number only until the next Position Autosampler event occurs, or to record all the position and cycle numbers used in the workflow.

Event results: Sample location (carousel position number and cycle number, if using multiple carousels).

Associated events: None

Associated specifications: Autosampler specifications, operator prompt specifications

Related events: Collect events

Related specifications: Autosampler Tablet Transmission Module sample specifications, Autosampler SoftGel Transmission Module sample specifications, Autosampler Integrating Sphere sample specifications, Standard Tablet Analyzer background specifications, Softgel Tablet Analyzer background specifications, Autosampler Integrating Sphere background specifications

Parameters: The illustration below shows the parameters for the Position Autosampler event. These parameters appear in the display area of RESULT Integration software when a Position Autosampler event is selected in a workflow.

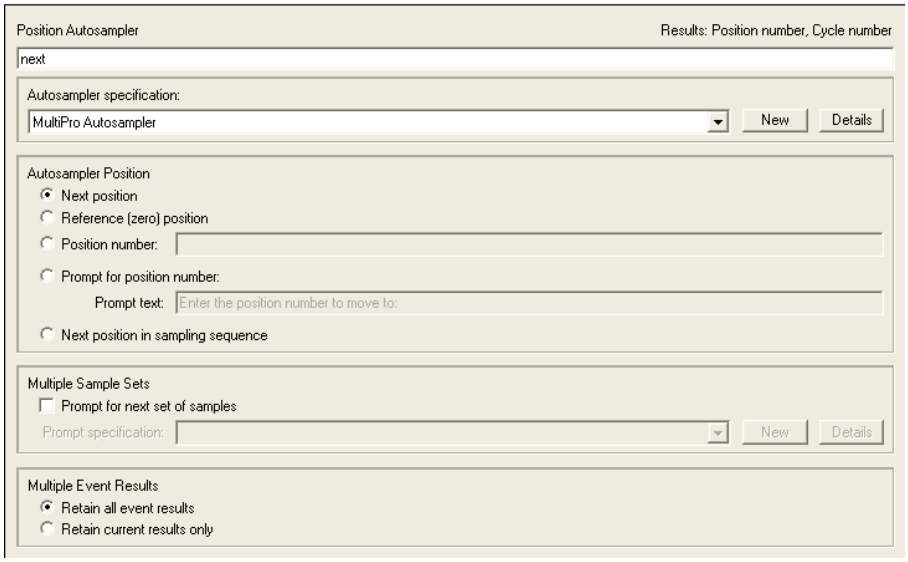

Position Autosampler Event parameters

The Position Autosampler event parameters define the associated autosampler specification, the autosampler movement, whether an operator prompt occurs when the autosampler finishes the last sample in the current carousel, and the storage of results from multiple Position Autosampler events in a workflow. The following sections explain the Position Autosampler event parameters in detail. The parameters are explained in the order in which they appear in the software.

Autosampler Specification list box

A Position Autosampler event must be linked to a valid autosampler specification in order to move the autosampler carousel. The autosampler specification contains parameters that define the autosampler type and the number of samples in each carousel. See “Autosampler Specifications” in this chapter for information about setting up an autosampler specification in a workflow. To link an autosampler specification to a Position Autosampler event, select the specification name in the Autosampler Specification drop-down list, as shown below.

Use the New button at the right of the Autosampler Specification list box to create an autosampler specification and automatically link the new specification to the Position Autosampler event. If this Position Autosampler event is already linked to an autosampler specification, you can use the Details button to display that autosampler specification.

Autosampler Position

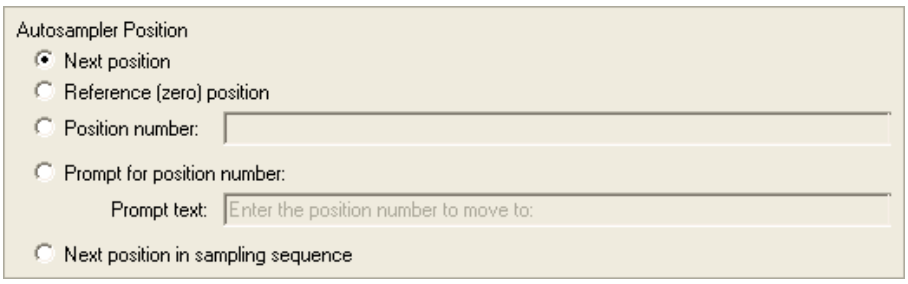

The Autosampler Position parameter defines the autosampler movement. You can configure a Position Autosampler event to move the autosampler to the next sequential position, the reference position, or a specific position number. You can also make it prompt the operator for a position number at run time or use the position numbers specified in a sampling sequence. All of these options are explained below.

The number of positions available depends on the number of samples you plan to analyze. The direction of movement (clockwise or counterclockwise) is determined by the shortest distance between the previous carousel location and the new location.

- **Next Position**. Select this option to direct the current carousel to the next sequential position. When this option is selected, the first time the workflow implements the Position Autosampler event, it moves the autosampler to first available sample position in the first carousel. If the reference (zero) position is reserved for background collections, the first available sample position is position number 1. If the reference position contains a sample, the first available sample position is position zero. See the "Autosampler Specifications" section in this chapter for more information.

- **Reference (Zero) Position**. Select this option to move the current carousel to the reference position (labeled "zero" on the MultiPro Autosampler carousels). This is often the preferred starting point for the workflow or after the operator installs a new carousel. Depending

on the collection technique and material used for background and sample collections, the reference position may contain a sample, a background reference sample, or nothing. See “Collecting Backgrounds” and “Autosampler Specifications” in this document for more information.

- **Position Number**. Select this option to move the current carousel to a specific position number and then enter the position number in the corresponding entry box, as shown below.

Note If you specify the reference position (position zero), the software moves the carousel to that position even if it is reserved for background collections. See the “Autosampler Specifications” section in this chapter for details about reserving the reference position for background collections. ▲

- **Prompt For Position Number**. Use this option to set up a dialog box that will prompt the operator to enter a position number at run time. Then enter the text for the operator prompt in the Prompt Text box, as shown below.

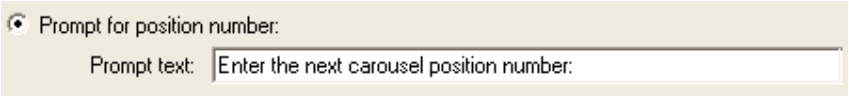

The workflow will display the prompt each time it implements this Position Autosampler event. The operator must respond to the prompt by entering a valid carousel position number before the workflow will continue.

- **Next Position In Sampling Sequence**. If the Position Autosampler event appears in a repeat loop, you can use an operator-defined sampling sequence to determine the next carousel position. The corresponding Repeat event must be set up to prompt for the sampling sequence at run time. The sampling sequence must specify a sample name and carousel position number for each iteration of the loop.

  When this option is selected and the corresponding Repeat event is configured to prompt for the sampling sequence at run time, the first time the workflow implements the Position Autosampler event, it moves the current carousel to the first position number and sample specified in the sampling sequence. The next iteration of the Position

Autosampler event moves the carousel to the second position number in the sampling sequence. This process continues until all the samples specified in the sequence have completed the operations in the loop. See "Repeat Events" in the "RESULT Integration Software" section of your *Antaris User's Guide* or the *Antaris Update* for more information.

Multiple Sample Sets

If you are analyzing more samples than will fit in one carousel, use the parameters in this group to define a prompt dialog box that will be displayed to the operator after the workflow finishes analyzing the last sample in each carousel.

To set up this type of prompt dialog box, first select the Prompt For Next Set Of Samples check box as shown below.

When the check box is selected, the Prompt Specification list box becomes available in the software. Use the Prompt Specification list box to link an operator prompt specification to this Position Autosampler event by selecting the specification name in the Prompt Specification list box as shown below.

Use the New button next to the list box to create an operator prompt specification and automatically link the new specification to this Position Autosampler event. If this Position Autosampler event is already linked to a prompt specification, use the Details button to the right of the list box to display that specification.

The prompt specification defines the contents and operation of the operator prompt dialog box. See "Prompt Specifications" in the "RESULT Integration Software" section of your *Antaris User's Guide* for information about setting up prompt specifications in a workflow. If the prompt dialog box is configured to allow the operator to respond by pressing the acknowledge button on the instrument, the green LED indicator will light when the dialog box is displayed on the screen. Depending upon how the

workflow is set up, after you install the new carousel, the autosampler either collects a background or positions the first sample for analysis.

Multiple Event Results

If you place multiple Position Autosampler events in your workflow or include them in a loop, each Position Autosampler event will produce a result indicating the sample position number. If using multiple carousels, the Position Autosampler result will also include a cycle number. The Multiple Event Results option buttons allow you to select whether the workflow will record all the locations specified by the Position Autosampler events so they are available for use in subsequent workflow events, or only the location specified by the most recent Position Autosampler event. The options for storing sample locations include:

- **Retain All Event Results.** Select this option if the Position Autosampler event occurs in a repeat or perform-while loop and you want to create one report that includes the position and cycle number of every sample (a report event that includes a table or summary item specification must be placed after the loop). When this setting is selected, the software remembers the position and cycle number of every spectrum produced in every iteration of the loop. See "Report Events" in the "RESULT Integration Software" section of your *Antaris User's Guide* for more information.

- **Retain Current Results Only.** Select this option if the Position Autosampler event occurs in a repeat or perform-while loop and the loop includes all subsequent events that use the sample position and cycle number. When this setting is selected, the software remembers only the position and cycle number of the spectrum produced in the previous iteration of the loop.

  This is the default setting for Multiple Event Results. If you use this setting and want to save the position and cycle numbers for all samples, make sure you add the position and cycle numbers to a report before the next Position Autosampler event occurs in the workflow.

Usage: Position Autosampler events may be placed anywhere in a workflow. They are typically placed right before or after a Collect event. A Position Autosampler event must be linked to a valid autosampler specification in order to move the autosampler carousel.

We recommend using one Position Autosampler event at the beginning of your workflow to initialize the autosampler. In order to initialize the autosampler, the Autosampler Position parameter must be set to the Reference (Zero) Position option.

If your workflow includes a repeat loop for collecting and measuring spectra, we recommend adding a second Position Autosampler event to the beginning of the loop to move the autosampler to the next sampling position.

If running a transmission experiment or a diffuse reflection experiment using an external background reference and the background collection is set up correctly, the workflow will use the reference position for background collections and then skip to the specified position to collect a spectrum from the first sample. See "Transmission Backgrounds" and "Diffuse reflection backgrounds using an external reference" to learn how to set up background collections for these applications.

If running a diffuse reflection experiment only using the internal gold background reference and the background collection is set up correctly, the workflow collects a background without moving the autosampler and regards any material located in position 0 as a sample. See "Diffuse reflection backgrounds using the internal reference" to learn how to set up background collections using the internal gold background reference.

The following events can operate on the Position Autosampler results (carousel position number and cycle number) if you place those events after the Position Autosampler event in the workflow.

- *Report event.* If your workflow includes a Position Autosampler event followed by a Collect event, use a report event that includes a table or summary item specification to add the carousel position and cycle number along with the measurement result to a sample report.

- *Check event.* A check event that is linked to a valid logical test specification may be used to produce an overall pass or fail result based on a Position Autosampler result.

- *Store event.* A store event may be used to store Position Autosampler results in the RESULT database, so they can be accessed with the logs features of RESULT Operation software and used to track trends in your data.

For more information, refer to the descriptions of these events in the "RESULT Integration Software" section of your *Antaris User's Guide*.

Collect events

Collection events instruct the workflow to collect the spectrum of a sample using the current settings for the collection parameters and a sample specification. The collection parameters define data collection for a given sample type or material. The sample specification configures the instrument for data collection using a particular sampling module or accessory and a given collection technique.

Depending on the requirements for data collection, a workflow set up to run the MultiPro Autosampler may contain a single collection event that runs once, a single collection event contained in a loop, or multiple collection events set in sequence and/or in a loop. Each collection event must include an autosampler sample specification, which defines the infrared beam path for data collection as well as the attenuator, resolution, gain, and spectral range values for the resulting sample spectrum.

The sample specification must also be linked to a valid autosampler specification, which defines the autosampler configuration, and an autosampler background specification, which specifies the number of background scans and the carousel position for background collections. A workflow designed to collect both transmission and diffuse reflection data from the same set of samples must contain at least two collection events, one to collect the diffuse reflection sample and background spectra and one to collect the transmission sample and background spectra.

The next two sections describe the sample and background specifications available for collecting transmission and diffuse reflection data using the MultiPro Autosampler. To link a sample specification to a collection event, select the collection event in the workflow and then select the specification name in the Sample Specification drop-down list, as shown below.

Use the New button at the right of the list box to create a sample specification and automatically link the new specification to the collection event.

For information about configuring autosampler specifications and linking them to collection events in a workflow, see "Autosampler specifications" in this chapter.

Sample specifications

RESULT provides three kinds of sample specifications to use with collection events for the MultiPro Autosampler. Each sample specification contains data collection parameters that are optimized for collecting transmission or diffuse reflection data from specific sample types. For example, the autosampler tablet transmission module sample specification should be used to collect data with the tablet transmission module. If you want to collect data with the softgel transmission module, use the autosampler softgel transmission module sample specification. The autosampler integrating sphere sample specification collects diffuse reflection data and is optimized for analyzing tablets, powders and other solids that have a rough or broken surface. For details about all the sample types that are compatible with the MultiPro Autosampler, see "Compatible Sample Types" in this document.

Autosampler sample specifications may be linked to collection events in a workflow, and must include a background specification and an autosampler specification.

Associated events: Collect events

Associated specifications: Standard Tablet Analyzer background specifications, SoftGel Tablet Analyzer background specifications, Autosampler Integrating Sphere background specifications, autosampler specifications

Related events: None

Related specifications: Prompt specifications

Parameters: The illustration below shows the parameters for the autosampler tablet transmission module sample specification. These parameters appear in the display area of RESULT Integration software when an autosampler tablet transmission module sample specification is selected in a workflow.

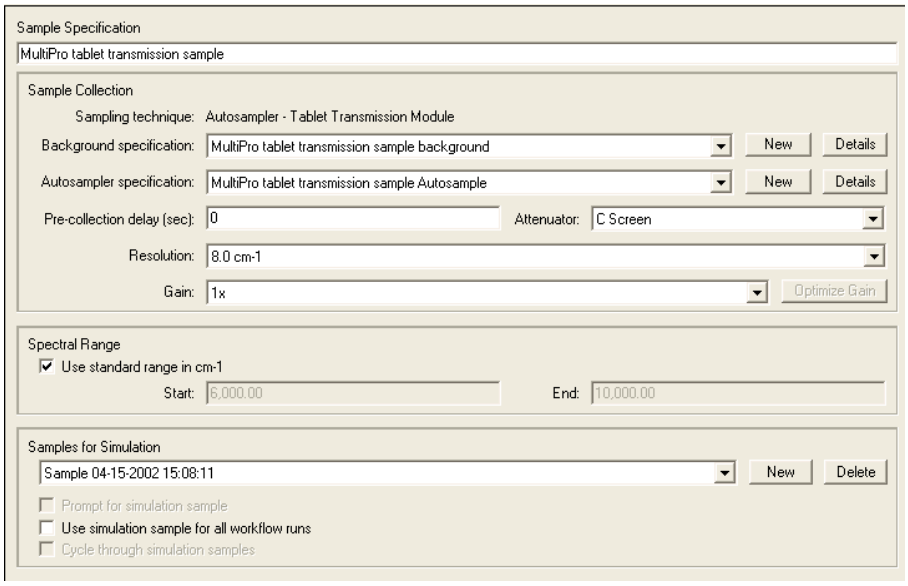

Autosampler transmission module sample specification parameters

The autosampler softgel transmission module and integrating sphere sample specifications contain the same parameters shown above; only the parameter settings may be different.

The following sections explain the parameters that are unique to the autosampler sample specification. The remaining parameters are common to all sample specifications and described in your *Antaris User's Guide*.

- **Background specification list box**. Each sample specification requires an associated background specification, which defines the number of background scans and the carousel position for background collections. See the next section for information about configuring background specifications for the MultiPro Autosampler.

  To link a background specification to a sample specification, select the specification name in the Background Specification drop-down list, as shown below:

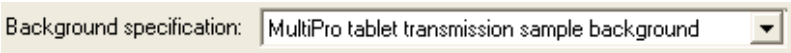

Only autosampler background specifications that are compatible with the current sample specification appear in the Background Specification drop-down list. For example, if you want to link a background specification to an autosampler tablet sample specification in a workflow, only the tablet background specifications appear in the drop-down list.

If this sample specification is already linked to a background specification, you can use the Details button to display that background specification. Use the New button at the right of the Background Specification list box to create an autosampler background specification and automatically link the new specification to this sample specification.

- **Autosampler specification list box.** Each sample specification requires an associated autosampler specification, which defines the autosampler configuration. See the previous section for information about setting up autosampler specifications in a workflow.

  To link an autosampler specification to a sample specification, select the specification name in the Autosampler Specification drop-down list, as shown below.

  Autosampler specification: MultiPro tablet transmission sample Autosample

  Use the New and Details buttons at the right of the Autosampler Specification list box to either create an autosampler specification or display the autosampler specification that is currently linked to this sample specification as explained in the previous section.

The remaining parameters are included on all sample specifications and described in the "Sample Specifications" section of "Chapter 3 Workflow Events and Specifications" in the "RESULT Integration Software" section of your *Antaris User's Guide*. For parameter settings and specifications recommended for use when collecting diffuse reflection data with the MultiPro Autosampler, see the "Integrating Sphere Sampling Module" chapter in the "Antaris Sampling" section of your *Antaris User's Guide*. To learn about the settings recommended for use when collecting transmission data with the MultiPro, see the "Tablet Analyzer Sampling Module" chapter in the "Antaris Sampling" section of your *Antaris User's Guide*.

Background specifications

RESULT provides three kinds of background specifications to use with collection events for the MultiPro Autosampler. Each background specification contains data collection parameters that are optimized for collecting transmission or diffuse reflection data from specific sample types. For example, the tablet background specification should be used to collect a background with the tablet transmission module. If you want to collect a background with the softgel transmission module, use the softgel background specification. The autosampler integrating sphere background specification collects a diffuse reflection background for use with tablets, powders and other solids that have a rough or broken surface. The integrating sphere background specification can be set up to collect background data from the internal gold reference or an external reference sample.

Autosampler background specifications may be linked to sample specifications in a workflow.

Associated events: None

Associated specifications: Autosampler tablet transmission module sample specifications, autosampler softgel transmission module sample specifications, autosampler integrating sphere sample specifications

Related events: Collect events

Related specifications: Autosampler specifications

Parameters: The illustration below shows the parameters for the autosampler integrating sphere background specification. These parameters appear in the display area of RESULT Integration software when an autosampler integrating sphere background specification is selected in a workflow.

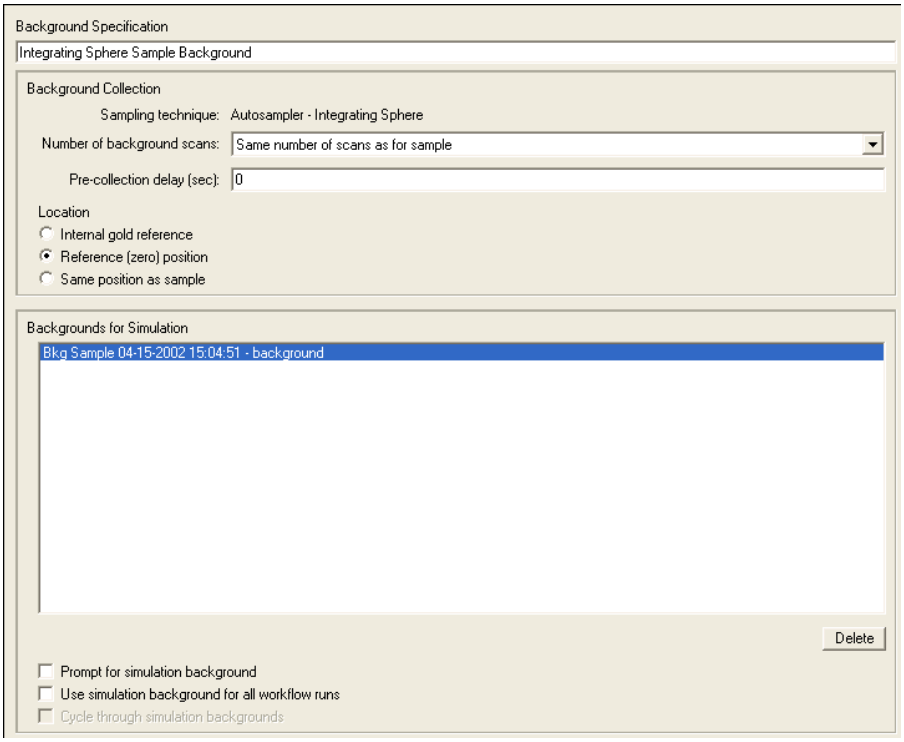

Autosampler integrating sphere background parameters

The following sections explain the parameters that are unique to the autosampler integrating sphere background specification. The remaining parameters are common to all background specifications and described in your *Antaris User's Guide*.

Note Background specifications for the autosampler transmission modules (tablet and softgel) are the same as the background specifications for the Antaris standard tablet analyzer and the Antaris softgel tablet analyzer. See your *Antaris User's Guide* for more information. ▲

- **Location.** Use this parameter to specify the location for background collections. When using the MultiPro Autosampler, you can collect backgrounds using an internal or external reference sample or no reference sample. You can also use this feature to evaluate instrument noise by collecting a sample and background from the same autosampler location. The options for collecting backgrounds are detailed below.

If you want to optimize sample throughput and minimize operator errors for diffuse reflection experiments, we recommend using the internal gold reference for background collections.

- *Internal Gold Reference* – Select this option to collect a diffuse reflection background using the integrating sphere's internal diffuse gold reference. If collecting a background using the internal gold reference, it is not necessary to add a background reference sample to the autosampler carousels.

  The internal gold reference is mounted on a software-controlled arm that swings the internal reference into and out of the near-infrared beam. Normally, the reference is located in the beam except when the system is collecting sample data or data from an external background reference. When collecting a background from the internal gold reference, the gold reference stays in the beam and background collection begins immediately. The status indicator in the software shows you the status of the background collection.

- *Reference (Zero) Position* – Select this option to collect a diffuse reflection background from an external reference sample. Place the reference sample in the carousel reference position (position 0 in the autosampler carousels). If the workflow must analyze samples contained in multiple carousels, place a duplicate reference sample in the reference position of each additional carousel. The reference sample should fit the carousel opening snugly. See "Collecting Backgrounds Using an External Reference" for examples of materials that can be used as an external reference sample.

Note If collecting a background from the reference position, make sure the autosampler specification associated with your sample specification has the Reference (Zero) Position Reserved For Background Collections check box selected. See "Collecting Backgrounds" in this document for more information. ▲

The green indicator on the instrument will be on when the instrument is ready to begin collecting the background. You will hear the flag under the integrating sphere window "click" open as the software moves the internal gold reference out of the near-infrared beam. The status indicator in the software will display the status of the data collection. Do not interfere with the carousel and transmission module while the instrument is collecting the background data. When the instrument has finished collecting the background data, the flag under the integrating sphere will "click" closed.

- *Same Position As Sample* – Select this option to collect a diffuse reflection background from the same autosampler position as the associated sample. The resulting spectrum will have no sample peaks (they ratio out) and may be used to evaluate instrument noise or to determine whether a given carousel position actually contains a sample.

The remaining parameters are included on all background specifications and described in the "Background Specifications" section of "Chapter 3 Workflow Events and Specifications" in the "RESULT Integration Software" section of your *Antaris User's Guide*. For parameter settings and specifications recommended for use when collecting diffuse reflection background data with the MultiPro Autosampler, see the "Integrating Sphere Sampling Module" chapter in the "Antaris Sampling" section of your *Antaris User's Guide*. To learn about the settings recommended for use when collecting transmission backgrounds with the MultiPro Autosampler, see the "Tablet Analyzer Sampling Module" chapter in the "Antaris Sampling" section of your *Antaris User's Guide*.

Process events

RESULT provides a processing tool for working with data collected with an autosampler. The Process event allows you to set up the workflow to calculate a variance spectrum, an average spectrum, or a difference spectrum from multiple source spectra. See "Process events" in a recent *Antaris Update* or your *Antaris User's Guide* for more information. The Process event is included in versions 1.2 and higher of Thermo Fisher Scientific's RESULT software.

Creating a basic workflow

Use RESULT Integration software to create and test workflows for the MultiPro Autosampler. Before you begin working with the autosampler, you should be familiar with the features in the RESULT Integration main window and the tools for creating and running workflows. See the "RESULT Integration Software" section of your *Antaris User's Guide* for more information.

To create a workflow for the MultiPro Autosampler, either start the workflow from scratch by using New Workflow in the RESULT Integration File menu or open and then resave one of the example workflows. To learn the file names and locations of the example workflows for the MultiPro Autosampler, see "Example Workflows" in this document.

Notice Do not use the workflow wizard to create workflows for the MultiPro Autosampler. The workflow wizard does not present the autosampler sample and background specification templates as options in the Sample Specification and Background Specification drop-down lists.. ▲

Use the Add button on the RESULT Integration toolbar or the Add command in the Edit menu to add events and specifications to the workflow. See "Adding Events and Specifications to a Workflow" in the "RESULT Integration Software" section of your *Antaris User's Guide* for more information.

The following table describes the basic elements of a MultiPro Autosampler collection event in a workflow. The example demonstrates the relationship between workflow events and specifications and highlights the features relevant to the MultiPro Autosampler. The order and content of your workflow will depend on the tasks you need performed, the number of samples to be analyzed, the collection technique and the sample material.

See "Testing the MultiPro Autosampler" for information about running a workflow in RESULT Integration software. To learn how to transfer workflows to RESULT Operation software, see "Transferring a Workflow to RESULT Operation" in the "RESULT Integration Software" section of your *Antaris User's Guide*.

Basic Elements of a MultiPro Autosampler collection sequence in a workflow

Workflow Event	Associated Specification	Description

Position Autosampler events		Add Position Autosampler events to the workflow to position the autosampler carousel.
		In the Position Autosampler event parameters:
		• Set Autosampler Position.
		• Choose New to create an autosampler specification.
		• If using multiple carousels, use Multiple Sample Sets to create an operator prompt to change the carousel by:
		  • Selecting the Prompt Operator For Next Set Of Samples check box, and,
		  • Using the New button to create a Prompt specification.

	Autosampler specification	In the autosampler specification parameters: • Set or prompt for the number of positions in the carousels. • Select the Reference (Zero) Position Reserved For Background Collections check box.
	Prompt specification	Use the Prompt specification parameters to define the text and action button displayed in the operator prompt dialog box.
Collect events for transmission spectra		Add a Collect event to the workflow. In the Collect event parameters: • Set Number Of Sample Scans, Data Format and Background Frequency. • Use the New button to create a sample specification. Select the autosampler transmission module sample specification that matches the transmission module mounted on the autosampler (tablet or softgel).

Workflow Event	Associated Specification	Description
Collect events for transmission spectra *(continued)*	Transmission sample specification	In the transmission sample specification parameters: • Set Attenuator, Resolution, and Gain. If you're not sure how to set them, place a sample under the transmission module and then run Quick Collect in the Tools menu. In the Quick Collect dialog box, use Optimize Gain to determine the optimum attenuator wheel and gain settings for your samples, and then copy those settings to your workflow.
	Transmission sample specification *(continued)*	• Select the autosampler specification in the list box. • Use the New button to create a background specification. Select the background specification that matches the autosampler transmission module (tablet or softgel).
	Transmission background specification	In the transmission background specification parameters: • Set Number of Background Scans. • Configure background collections using the reference (zero) position in the autosampler carousels by clearing the Collect Background Through Same Position As Sample check box. Make sure position 0 is empty in all the carousels.
Collect events for diffuse reflection spectra		Add a Collect event to the workflow. In the Collect event parameters: • Set Number Of Sample Scans, Data Format and Background Frequency. • If the workflow will collect both transmission and diffuse reflection spectra and you plan to collect diffuse reflection backgrounds using an external reference sample, use operator prompts to tell the operator when to insert and remove the reference sample. • Define a Before Background prompt that asks the operator to insert the reference sample in position 0 before background collection begins. • Define a Before Sample prompt that asks the operator to remove the reference sample before the workflow can continue.

Workflow Event	Associated Specification	Description
		• Use the New button to create a sample specification. Select an autosampler integrating sphere sample specification.
Collect events for diffuse reflection spectra *(continued)*	Integrating sphere sample specification	In the integrating sphere sample specification parameters: • Set Attenuator, Resolution, and Gain. • Select the autosampler specification in the list box. • Use the New button to create a background specification. Select the background specification for the autosampler integrating sphere.
	Integrating sphere background specification	In the integrating sphere background specification parameters: • Set Number of Background Scans. • Define the location for background collections. • If using the internal background reference, set Location to the Internal Gold Reference option. • If using an external reference sample, set Location to the Reference (Zero) Position option. **Note**: If the workflow will collect both transmission and diffuse reflection spectra, the associated Collect event must prompt the operator to insert the reference sample before background collection begins and to remove the reference sample when background collection is completed.

Example Workflows

The CD for RESULT software suite revisions 2 and higher contain six RESULT workflows you can use to test and operate the MultiPro Autosampler. The example workflows are described briefly below.

The Comment field of the first workflow event provides a detailed description of each workflow. To display comments for a workflow, open the workflow in RESULT Integration software and then select the first workflow event displayed in the workflow navigation frame.

- **MultiPro_Autosampler_Tablet_Basic.wfl** – This is a basic workflow to collect transmission spectra using the MultiPro Autosampler with the tablet transmission module and a 40-position carousel. The workflow collects a background spectrum from carousel position 0. Then it moves the carousel to the first sample position, collects a sample spectrum, saves the spectrum in a report and archives the spectrum and the report. This process is repeated for each remaining sample position in the carousel.

- **MultiPro_Autosampler_Tablet_Dual.wfl** – This workflow collects both transmission and diffuse reflection spectra from each sample in the autosampler carousel. It collects one transmission background spectrum and one diffuse reflection background using the integrating sphere's internal gold reference. Each set of transmission and diffuse reflection sample spectra are saved in a separate sample report. The workflow archives all the spectra and reports. The workflow is configured for the standard (40-position) carousel.

- **MultiPro_Autosampler_SoftGel_Basic.wfl** – This is a basic workflow to collect transmission spectra using the MultiPro Autosampler with the softgel transmission module and a 40-position carousel. The workflow operates the same as the tablet version described above.

- **MultiPro_Autosampler_SoftGel_Dual.wfl** – This workflow collects both transmission and diffuse reflection spectra from each sample in the autosampler carousel. It collects one transmission background spectrum and a diffuse reflection background using an external reference sample. Each set of transmission and diffuse reflection sample spectra are saved in a separate sample report. The workflow archives all the spectra and reports. The workflow is configured for the standard (40-position) carousel.

- **ValPro_MultiPro_Tablet.wfl** – Use this workflow to determine whether an Antaris instrument with a MultiPro Autosampler and tablet transmission module is operationally qualified. The qualification workflow is configured for the standard (40-position) carousel. The workflow uses the tablet transmission module for background and sample collections. When you run the workflow, it collects a spectrum at each carousel position, checks for any workflow errors, issues a pass or fail result for the entire workflow, creates a sample report and archives the report.

  For Antaris systems that have Thermo Fisher Scientific's ValPro system qualification package, use this workflow as a starting point when creating a workflow to qualify the MultiPro Autosampler installation with the tablet transmission module. See the *ValPro Installation Qualification Procedure for the MultiPro Autosampler* document for more information.

- **ValPro_MultiPro_SoftGel.wfl** – Use this workflow to determine whether an Antaris instrument with a MultiPro Autosampler and softgel transmission module is operationally qualified. The workflow operates the same as the tablet version described above.

These workflow files are included on the RESULT software CD (RESULT software suite revisions 2 and higher) and should have been loaded into the RESULT Data\Workflows directory during the software installation. You can run the example workflows from RESULT Operation or RESULT Integration software. See "Testing the MultiPro Autosampler" for instructions for running workflows from RESULT Integration. To learn how to run workflows from RESULT Operation software, see the "RESULT Operation Software" section of your *Antaris User's Guide*.

If you don't have a carousel of samples handy to run an example workflow, run the workflow in simulation mode so it uses the spectra stored with the workflow. RESULT Integration provides an option to run workflows in simulation mode from the Run Time Test window. To display the Run Time Test window, choose Test from the RESULT Integration toolbar. See "Testing a Workflow" in the "RESULT Integration Software" section of your *Antaris User's Guide* for more information.

Removing the MultiPro

The MultiPro Autosampler can remain on the instrument at all times unless you need to remove it to sample large items or use another sample holder or accessory with the integrating sphere, attach a tablet analyzer to the instrument, or replace internal instrument parts.

Notice Because the MultiPro Autosampler has an electrical connection, we recommend that you power off the instrument while installing and removing the autosampler to avoid possible damage to the electronics. Before you power off the instrument, be sure to log off any software applications. ▲

To remove the MultiPro Autosampler:

1. **Remove the carousel from the autosampler, if one is installed.**

   To remove the carousel, first raise the transmission detector. Then use both hands to grasp the two handles and slowly lift the carousel straight up and off the autosampler base. See "Installing and Removing a Carousel" in this document for detailed instructions.

2. **Turn the silver thumbscrew on the autosampler base counter clockwise until the screw is completely free of the spring-loaded ball on the front of the analyzer.**

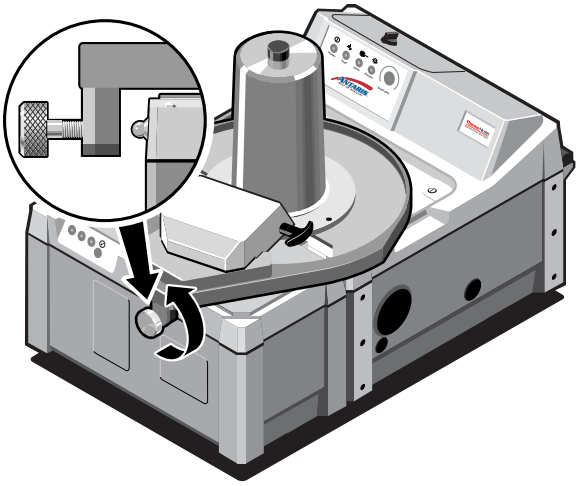

3. **Carefully pull up on the autosampler to detach the connector from the data port and remove the metal alignment tab from the slot in the instrument.**

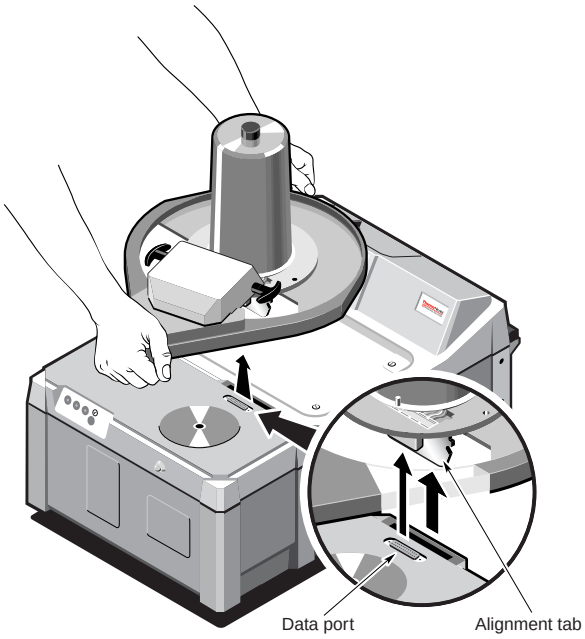

4. **Replace the silver tray and the tablet analyzer module, if desired.**

   The tray attaches to the top of the Antaris instrument by magnetized strips.

Maintaining the MultiPro

Carefully read and follow the information in this section about storing and cleaning items in order to prevent damage from occurring to the autosampler and carousels.

Storing the autosampler

When the autosampler is not connected to the instrument, store it in a dry, dust-free environment such as a clean cabinet or box. When storing the autosampler, you may leave the tablet transmission module attached to the autosampler base. Lower the transmission detector before storing the autosampler.

If a transmission module is not attached to the autosampler, wrap the module in a soft cloth to prevent damage from occurring to the sapphire sampling window.

Cleaning the autosampler

Parts of the autosampler may accumulate debris or become contaminated from sample materials. Follow the recommendations in this section for cleaning and maintaining the autosampler components.

⚠ Caution Because the autosampler has an electrical connection, be sure to remove the autosampler before cleaning it. Before removing the autosampler, be sure to exit the RESULT software and power off the instrument. ▲

If residue accumulates on the autosampler base, clean it with a dry or damp cloth and a mild soap solution, if necessary. Be sure to remove any residue left by the soap solution with a dry or damp, soft cloth. Dry the autosampler bottom with a dry, soft cloth.

If the body of the autosampler becomes dirty, you can wipe it clean with a damp (not wet) soft cloth and a mild detergent solution.

Cleaning the carousels

Clean the autosampler carousels with a mild soap solution and then rinse the carousels in distilled water. Dry the carousel with a jet of clean air or a non-abrasive cloth. Make sure the carousels are dried thoroughly before storing them or using them for data collection.

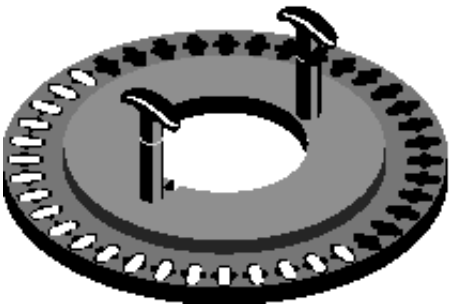

Cleaning the transmission sampling window

If residue accumulates on the transmission sampling window, try cleaning it by wiping it with a dry, soft cloth. If this is insufficient to clean the window, you can dampen the cloth with distilled water or isopropyl alcohol. Dry the sampling window with a clean, soft cloth, a jet of air, or allow the window to air dry.

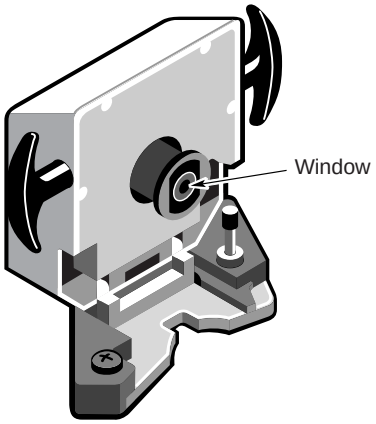

Notice Some chemicals, including acetone, chlorine, fluorine, and amyl alcohol, can attack the epoxy seal around the sampling window. Do not allow these chemicals to come into contact with the sampling window. ▲

Cleaning the integrating sphere sampling window

If residue accumulates on the integrating sphere sampling window, remove the autosampler and try cleaning the window by wiping it with a dry, soft cloth. If this is insufficient to clean the window, you can dampen the cloth with distilled water or isopropyl alcohol. Dry the sampling window with a clean, soft cloth, a jet of air, or allow the window to air dry.

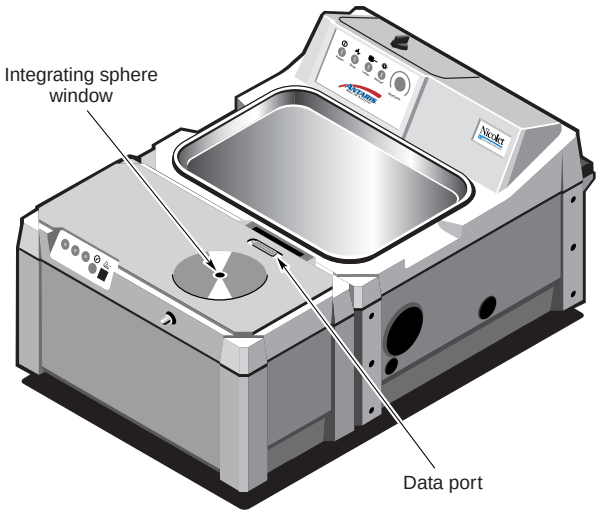

Notice Do not pour liquids directly onto the integrating sphere sampling area of the Antaris instrument. This could pose a shock hazard if the liquid comes into contact with the data port. ▲

Notice Some chemicals, including acetone, chlorine, fluorine, and amyl alcohol, can attack the epoxy seal around the sampling window. Do not allow these chemicals to come into contact with the sampling window. ▲

Servicing the MultiPro

Only service engineers certified by Thermo Fisher Scientific are authorized to service the MultiPro Autosampler. If your autosampler malfunctions, contact Thermo Fisher Scientific.

Troubleshooting

This chapter describes some possible problems you may encounter while operating the MultiPro Autosampler and offers suggestions for resolving them. If you are unable to resolve a problem or have questions or concerns, contact your local Thermo Fisher Scientific service representative. See “Questions or Concerns" in this guide for more information.

Note Updated troubleshooting information can also be found in the release notes and other updates for Antaris products and RESULT software. ▲

Problem	Possible Causes	Suggestions
The autosampler doesn’t sit flat against the Antaris instrument.	You left the silver tray on the Antaris instrument.	Remove the autosampler. If the large silver sampling tray is installed on the top of the Antaris instrument, remove the tray and then install the autosampler. The tray attaches to the instrument by magnetized strips.
	You left the cover on the Antaris electrical connector.	Remove the autosampler. If there is a clear protective cover over the female electrical connector on the Antaris instrument, remove the cover and then install the autosampler.
	One of the connectors is damaged or clogged with debris.	Remove the autosampler. Make sure there is no debris clogging the female connector on the instrument and the male connector on the autosampler. If one or both connectors are clogged, contact a Thermo Fisher Scientific service representative to arrange repair service.
	The autosampler isn’t seated properly on the Antaris integrating sphere.	Remove the autosampler, review the instructions in “Installing the MultiPro Autosampler” and then attempt to install the autosampler again. If the thumbscrew is not aligned with the ball or if the autosampler bottom is not resting flat against the top of the instrument, contact Thermo Fisher Scientific.

Problem	Possible Causes	Suggestions
The carousel doesn't lay flat on the autosampler base.	Debris is interfering with the carousel.	Remove the carousel and the MultiPro Autosampler and check that the Antaris integrating sphere window is clean and clear of debris. Reinstall the autosampler and carousel.
	The carousel is installed incorrectly.	Make sure the pin on the autosampler base is aligned with the notch in the carousel base. See "Installing and Removing a Carousel" for details.
A software error message says the autosampler isn't connected to the Antaris instrument	The autosampler isn't seated properly on the Antaris integrating sphere.	Make sure the autosampler electrical connector is firmly seated in the female connector on the Antaris instrument and the connectors are free of debris. See "Installing the MultiPro Autosampler" for details.
The carousel doesn't rotate.	Debris is interfering with the carousel movement.	Remove the carousel and the MultiPro Autosampler and check that the Antaris integrating sphere window is clean and clear of debris. Reinstall the autosampler and carousel and then restart your workflow.
	The autosampler is installed incorrectly.	Make sure the autosampler electrical connector is firmly seated in the female connector on the Antaris instrument and the connectors are free of debris. See "Installing the MultiPro Autosampler" for details.
	The carousel is installed incorrectly.	Make sure the pin on the autosampler base is aligned with the notch in the carousel base. See "Installing and Removing a Carousel" for details.
	The workflow isn't set up to run the autosampler.	Display the workflow in RESULT Integration software, select the Collect event for the autosampler and then make sure the Sample Specification list box is set to a valid autosampler sample specification (autosampler tablet, autosampler softgel, or autosampler integrating sphere). Then select the sample specification and make sure the Autosampler Specification list box is set to a valid autosampler specification and the Background Specification list box is set to a valid background specification (tablet, softgel, or autosampler integrating sphere).

Problem	Possible Causes	Suggestions
A software error message says the autosampler is unable to position the transmission detector.	The transmission detector sensor is blocked.	Raise the transmission detector and look for the red indicator light at the base of the transmission module. If the Antaris instrument is on and the MultiPro Autosampler is properly installed, the indicator should light when you raise the transmission detector. If you don't see a red light at the base of the transmission module, contact Thermo Fisher Scientific.
	The transmission module isn't seated properly on the autosampler.	Make sure the transmission module electrical connector is firmly seated in the female connector on the autosampler and the connectors are free of debris. See "Installing a transmission module" for details.
	The sample is too thick for transmission experiments.	An optical sensor in the transmission module prevents data collection from occurring when the detector column is not fully extended. To avoid this error message, use a thinner sample.
My samples don't fit the carousel openings.	You need to order a custom carousel that fits your samples.	Contact Thermo Fisher Scientific.
The carousel doesn't position the samples in the infrared beam.	The autosampler specification isn't configured properly in the workflow.	Display the workflow in RESULT Integration software, select the Collect event for the autosampler and then display the associated sample specification. In the sample specification, make sure the Autosampler Specification list box is set to a valid autosampler specification. In the autosampler specification, set Autosampler Carousels to the Specify Number of Positions option and then enter the correct number of positions in your carousel, including position zero.
The carousel doesn't move to the next sequential sample before collecting data.	The Position Autosampler event isn't configured properly in the workflow.	Display the workflow in RESULT Integration software, add a Position Autosampler event before the autosampler collection event. Select the Position Autosampler event and make sure the Autosampler Specification list box is set to a valid autosampler specification. In the Position Autosampler event parameters, set Autosampler Position to the Next Position option.

Problem	Possible Causes	Suggestions
The carousel keeps moving the reference (zero) position under the infrared beam.	The Collect event is configured to collect backgrounds frequently.	Display the workflow in RESULT Integration software and then select the Collect event for the autosampler. In the Collect event parameters, set Background Frequency to either collect a background spectrum once for each workflow run or after a specified period. If collecting backgrounds after a specified period, enter the time period between background collections and then restart the workflow.

269-236800, Rev A

Thermo
SCIENTIFIC