TRACE GC

Gas Chromatograph

Operating Manual

Thermo Finnigan

TRACE™ GC Operating Manual
January 2001 Edition
Part Number M317 091 70

Printed in Italy

Published by ThermoQuest Italia S.p.A., Strada Rivoltana, 20090 Rodano - Milan - Italy
Tel: +39 02 95059355 Fax: +39 02 95059388

Printing History: First Edition, released June 1998.
Second Edition, released November 1998.
Third Edition, released June 1999.
Fourth Edition, released January 2001

Disclaimer

Technical Information contained in this publication is for reference purposes only and is subject to change without notice. Every effort has been made to supply complete and accurate information; however, ThermoFinnigan assumes no responsibility and will not be liable for any errors, omissions, damage, or loss that might result from any use of this manual or the information contained therein (even if this information is properly followed and problems still arise).

This publication is not part of the Agreement of Sale between ThermoFinnigan and the purchaser of a TRACE™ GC system. In the event of any conflict between the provisions of this document and those contained in ThermoQuest's Terms and Conditions, the provisions of the Terms and Conditions shall govern.

Reference to System Configurations and Specifications supercede all previous information and are subject to change without notice.

Trademarks

TRACE™ is a trademark of ThermoQuest Italia S.p.A.. Other brand and product names may be trademarks or registered trademarks of their respective companies.

Declaration

Manufacturer: *ThermoQuest Italia S.p.A.*

ThermoQuest Italia S.p.A. is the manufacturer of the instrument described in this manual and, as such, is responsible for the instrument safety, reliability and performance only if:

- installation
- re-calibration
- changes and repairs

have been carried out by authorized personnel and if:

- the local installation complies with local law regulations
- the instrument is used according to the instructions provided and if its operation is only entrusted to qualified trained personnel

ThermoQuest Italia S.p.A. is not liable for any damages derived from the non-compliance with the aforementioned recommendations.

ThermoQuest Italia S.p.A.
Strada Rivoltana
20090 RODANO (MI)
ITALY

Contents

SECTION III
Injectors

SECTION IV
The Oven and Columns

SECTION V
Detectors

SECTION VIII
Methods and Sequences

Figures

Tables

Operating Sequences

User Interface

Configuration

Digital Gas Control

Manual Gas Control

S/SL

OCI

HOTOC

LVOC

PKD

PPKD

PTV- PTVLV

GSV

Oven

Columns

Detectors

FID

ECD

NPD

PID

FPD

TCD

PDD

Automated Functions

Manual Functions

Methods

Sequences

About This Manual

Overview

This *Operating Manual* contains descriptions of the features and components of the TRACE GC gas chromatograph. Inside, you will find all of the information necessary for routine operation of your GC, including operating sequences, sample injection techniques, and diagrams and descriptions of the major components.

This manual is organized as follows:

Section I familiarizes you with your TRACE GC gas chromatograph. In addition to basic descriptions of TRACE GC features and systems, this section contains instructions for configuring and interacting with your GC.

Chapter 1, *TRACE GC Overview*, provides a basic overview of the features and options of the TRACE GC gas chromatograph.

Chapter 2, *The TRACE GC User Interface*, gives a general overview of the TRACE GC user interface, including basic information about key functions and menus.

Chapter 3, *Configuration*, describes how to set up the software on your TRACE GC either to match the installed hardware or to reflect your preferences.

Section II contains information on controlling and programming the detector and carrier gas flows to the TRACE GC.

Chapter 4, *Digital Gas Control*, This chapter describes the automatic (DPFC and DGFC) gas control features of the TRACE GC and contains the instructions to program and regulate the GC carrier gases control.

Chapter 5, *Manual Gas Control*, describes the manual (NonDPFC and non-DGFC) gas control features of the TRACE GC and contains the instructions to regulate the GC carrier gases control.

Section III contains information about the injection systems available for the TRACE GC.

Chapter 6, *Split/Splitless Injector (S/SL)*, describes the Split/Splitless (S/SL) injector and contains operating sequences for the different split/splitless operating modes.

Chapter 7, *On-Column Injector (OCI)*, describes the On-Column injector (OCI), on-column injection techniques, and operating sequences.

Chapter 8, *High Oven Temperature Cold On-Column Injector (HOT OC)*, describes the HOT Cold On-Column (HOT OC) injector for injections at high oven temperatures, HOT on-column injection techniques, and operating sequences.

Chapter 9, *Large Volume On-Column Injector (LVOCI)*, describes the Large Volume On-Column Injector (LVOCI) used for large volume injections with an autosampler.

Chapter 10, *Packed Column Injector (PKD)*, describes the Packed (PKD) column injector and explains the packed column operating sequences.

Chapter 11, *Purged Packed Column Injector (PPKD)*, describes Purged Packed Column (PPKD) injector, which has a septum purge option. Included in this chapter are PPKD injection techniques and operating sequences.

Chapter 12, *Programmable Temperature Vaporizing Injector (PTV)*, describes the Programmable Temperature Vaporizing (PTV) injector and contains operating sequences for using the injector in different operating modes.

Chapter 13, *Gas Sampling Valves (GSV)*, describes the gas sample valves available with the TRACE GC and contains operating sequences for manual and automatic sampling.

Section IV contains information about the configuration options for the TRACE GC column oven and sequences for using capillary and packed columns in the oven.

Chapter 14, *The Column Oven*, describes the features and configuration options for the TRACE GC column oven and includes operating sequences for oven programming.

Chapter 15, *Columns*, describes the analytical columns used in the TRACE GC.

Section V contains information about detector configuration and operation.

Chapter 16, *Detector Overview*, gives basic information about the detectors available with the TRACE GC.

Chapter 17, *Flame Ionization Detector (FID)*, describes the operating principles and sequences for the Flame Ionization Detector (FID).

Chapter 18, *Electron Capture Detector (ECD)*, describes the operating principles and sequences for the Electron Capture Detector (ECD).

Chapter 19, *Nitrogen Phosphorus Detector (NPD)*, describes the operating principles and sequences for the Nitrogen Phosphorus Detector (NPD).

Chapter 20, *Photoionization Detector (PID)*, describes the operating principles and sequences for the Photoionization Detector (PID).

Chapter 21, *Flame Photometric Detector (FPD)*, describes the operating principles and sequences for the Flame Photometric Detector (FPD).

Chapter 22, *Thermal Conductivity Detector (TCD)*, describes the operating principles and sequences for the Thermal Conductivity Detector (TCD).

Chapter 23, *Pulsed Discharge Detector (PDD)*, describes the operating principles and sequences for the Pulsed Discharge Detector (PDD).

Section VI contains informations about AS 2000 and HS 2000 programming with the TRACE GC keypad.

Chapter 24, *AS 2000 Autosampler*, describes how to program and control the AS 2000 autosampler by using the TRACE GC keypad.

Chapter 25, *HS 2000 Autosampler*, describes how to program and control the HS 2000 autosampler by using the TRACE GC keypad.

Section VII contains descriptions of automated and manual control options and sequences for the TRACE GC.

Chapter 26, *Automated Functions*, shows you how to automate signal, valves, and external events by scheduling them either in real time (clock table events) or at certain points during a run (run table events). It also discusses the run log, an automated record of run deviations.

Chapter 27, *Manual Functions*, describes how to control signal and valve events manually.

Section VIII contains information on programming analytical methods and using them in autosampler injection sequences.

Chapter 28, *Using Analytical Methods*, describes how to set up analytical methods that run automatically when specified.

Chapter 29, *AS Autosampler Sequences*, contains the instructions to programming a sample sequence with the TRACE GC keypad when an AS 2000 autosampler is used and how to set up ranges of samples to run automatically.

Chapter 30, *HS Autosampler Sequences*, contains the instructions to programming a sample sequence with the TRACE GC keypad when an HS 2000 autosampler is used and how to set up ranges of samples to run automatically.

Appendix A, *Ionization Potential of Selected Molecules*, contains information to help you determine the PID lamp intensity necessary to ionize certain molecules.

Appendix B, *Customer Communication*, contains contact information for ThermoFinnigan offices worldwide. This appendix also contains a one-page *Reader Survey*.

The *Glossary* contains definitions of terms used in this guide and the help diskette. It also includes abbreviations, acronyms, metric prefixes, and symbols.

The *Index* contains an alphabetical list of key terms and topics in this guide, including cross references and the corresponding page numbers.

Conventions Used in This Manual

The following symbols and typographical conventions are used throughout this manual.

Bold	Bold text indicates names of windows, dialog boxes, and fields.
Italic	Italic indicates cross references, first references to important terms defined in the glossary, and special emphasis.
`Monospace`	Monospace, or Courier, indicates filenames and filepaths or text the user should enter with the keyboard.
`Monospace Bold`	Monospace Bold indicates messages, prompts, or menu titles displayed on the computer screen or on a digital display.
»	This symbol illustrates menu paths to select, such as **File»Open…**.
KEY NAME	Bold, uppercase sans serif font indicates the name of a key on a keyboard or keypad, such as **ENTER**.
CAUTION	This symbol alerts you to an action or sequence that, if performed improperly, could damage the instrument.
NOTE	This symbol alerts you to important information related to the text in the previous paragraph.
WARNING!	This symbol alerts you to an action or sequence that, if improperly performed, could result in damage to the instrument or possible physical harm to the user. This symbol may be followed by icons indicating special precautions that should be taken to avoid injury.
	This symbol indicates an electric shock hazard.

This symbol indicates danger from hazardous chemicals.

This symbol indicates danger from high temperature surfaces or substances.

This symbol indicates a fire hazard.

This symbol indicates an explosion hazard.

This symbol indicates a toxic hazard.

This symbol indicates the presence of flammable materials.

This symbol indicates the presence of radioactive material.

This symbol indicates an operation or sequence that must *not* be performed by the user. A ThermoFinnigan authorized Customer Support Engineer must perform this sequence.

This symbol indicates all metal objects, such as watches and jewelry, must be taken off.

This symbol indicates an eye hazard. Eye protection must be worn.

This symbol indicates the user must wear a protective screen when performing the sequence.

This symbol indicates the user must wear protective shoes when performing the sequence.

This symbol indicates the user must wear protective clothing when performing the sequence.

This symbol indicates the user must wear gloves when performing the sequence.

Instrument Markings and Symbols

The following table explains the symbols used on ThermoFinnigan instruments. Only a few of them are used on the TRACE GC gas chromatograph.

Symbol	Description
⎓	Direct Current
∼	Alternating Current
≂	Both direct and alternating current
3∼	Three-phase alternating current
⏚	Earth (ground) terminal
⏚	Protective conductor terminal
⏚	Frame or chassis terminal
⏚	Equipotentiality

Symbol	Description
	On (Supply)
	Off (Supply)
	Equipment protected throughout by DOUBLE INSULATION or REINFORCED INSULATION (Equivalent to Class II of IEC 536)
	Indicates that the user must refer to the manual for specific Warning or Caution information to avoid personal injury or damage to the product.
	Caution, risk of electric shock
	Caution, hot surface
	Caution (refer to accompanying documents)
	In-position of a bistable push control
	Out-position of a bistable push control

Using the TRACE GC Document Set

The TRACE GC Document Set (CD-Rom PN 317 095 00) includes all manuals in electronic format, and serves as your library for information about the TRACE hardware and software.
The TRACE GC Document Set (PN 317 093 00) as paper copy is also available Furthermore, ThermoFinnigan part numbers (PN) for the paper copy manuals are provided for each book title.

Site Preparation and Installation Manual (PN 317 091 90)
This manual and diskette describes how to set up a workspace for the TRACE GC and how to connect the TRACE GC to the gas supplies and peripheral devices.

Acceptance Package (PN 317 092 20)
This folder contains required shipping documents and quality report forms.

Getting Started (PN 317 092 30)
This guide contains sequences for checking configuration, installing detectors, and making a first analysis with the TRACE GC.

Operating Manual (PN 317 091 70)
This manual provides descriptions of the TRACE GC hardware and software and instructions for their use.

Quick Reference Card (PN 317092 40)
This reference card contains guidelines for carrier gas use and injection sequences.

K-Factor Quick Reference (P/N 317 092 41)
This reference card contains information to interpretate results from a Column Evaluation.

Preventive Maintenance Schedule (PN 317 092 80)
This document provides a list of recommended scheduled maintenance and a year-long log book to record maintenance, observations, supply lists, and service records.

Maintenance and Troubleshooting Guide (PN 317 091 80)
This manual contains instructions for diagnosing and resolving operational problems.

Standard Operating Procedures (PN 317 092 00)
This manual contains instructions, operating sequences, and test criteria for final testing of the TRACE GC.

Spare Parts Catalog (PN 317 092 10)
This catalog contains a list of spare parts for the TRACE GC.

Using Hydrogen

The use of hydrogen as a carrier gas or as fuel for certain flame detectors requires the operator's strict attention and compliance with special precautions due to the hazards involved.

Hydrogen is a dangerous gas, particularly in an enclosed area when it reaches a concentration corresponding to its lower explosion level (4% in volume). When mixed with air it can create an explosive mixture. An explosion hazard could develop in the GC oven when hydrogen is used as a carrier gas if oven elements are not perfectly connected to each other, or if the connection materials are worn out, broken, or otherwise faulty.

Use the following safety precautions when using hydrogen:

- Ensure that all hydrogen cylinders comply with the safety requirements for proper use and storage. All hydrogen cylinders must be equipped with safety valves and automatic safety systems.
- Make sure the gas supply is turned completely off when connecting hydrogen lines.
- Perform a bubble test to ensure that the hydrogen lines are leak-tight before using the instrument. Perform the bubble test after performing the pressure test described in the *TRACE GC Maintenance and Troubleshooting Manua*l.
- Avoid spraying any electrical components during the bubble test. Continue checking each section of the pneumatic circuit until you identify the leak.

If you need to perform a leak check inside the pneumatic compartment, first perform the bubble test with all circuits pressurized, then disconnect the GC from the main gas supply and remove the pneumatic circuit panel. Repeat this sequence until you eliminate all leaks.

- Ensure your GC column oven has a hydrogen sensor. A hydrogen sensor continuously monitors the hydrogen level in the GC column oven.

  If your GC oven does not have a hydrogen sensor already installed, contact your ThermoFinnigan sales representative. To comply with instrument safety requirements, a ThermoFinnigan CSE or authorized service technician should install the sensor.

  If you plan to use a sensor other than the sensor recommended by ThermoFinnigan, you must verify its ability to perform the functions listed above before installing it. It must comply with your local safety regulations, or with the IEC 1010[1] regulations if local regulations do not exist.

Using the Hydrogen Sensor

The lower limit of the hydrogen sensor is 0.5% in volume. You should adjust the detection threshold to 1% in volume, which is 25% of the hydrogen lower limit of explosion (4% in volume).

In cases where the connections begin to leak or the column breaks, the sensor alerts the operator. It then automatically cuts off the gas supply and heating to the active zones, and sweeps the column oven with forced air ventilation.

If the sensor detects anomalies or leaks during GC operation due to instrument malfunction, the operator must immediately:

- close the hydrogen supply
- switch off the gas chromatograph
- air out the room

1. IEC 1010-1, First Edition, September 1990; IEC 1010-1, Amendment 1, September 1992; IEC 1010-1, Amendment 2, June 1995.

The reliability of the sensor depends on careful maintenance. After the sensor is in use, you must periodically check its operating performance and calibration as recommended by the manufacturer. Refer to your hydrogen sensor's instruction manual for maintenance guidelines.

WARNING! Never use hydrogen in your TRACE GC system unless your GC oven has a hydrogen sensor installed.

NOTE ThermoFinnigan CSEs are not authorized to install or repair any instrument using hydrogen as a carrier gas unless the instrument is equipped with the appropriate sensor.

Using Liquid Coolants

High pressures and extremely low temperatures make pressurized liquid CO_2 and liquid N_2 hazardous materials.

- High concentrations of CO_2 are dangerous.
- High concentrations of N_2 in the air can cause an asphyxiation hazard.

To avoid injury, always follow the safety precautions and delivery system design recommended by your gas supplier.

SECTION I

TRACE GC Basics

This section familiarizes you with your TRACE GC gas chromatograph. In addition to basic descriptions of TRACE GC features and systems, this section contains instructions for configuring and interacting with your GC.

Chapter 1, *TRACE GC Overview*, provides a basic overview of the features and options of the TRACE GC gas chromatograph.

Chapter 2, *The TRACE GC User Interface*, gives a general overview of the TRACE GC user interface, including basic information about key functions and parameter tables.

Chapter 3, *Configuration*, describes how to set up the software on your TRACE GC either to match the installed hardware or to reflect your preferences.

1

TRACE GC Overview

This chapter provides a basic overview of the features and options of the TRACE GC gas chromatograph. After each brief description of a TRACE GC component, you will find references to chapters in this manual containing more detailed information.

Chapter at a Glance...

TRACE GC System Components

The TRACE GC consists of four major components, as shown in Figure 1-1.

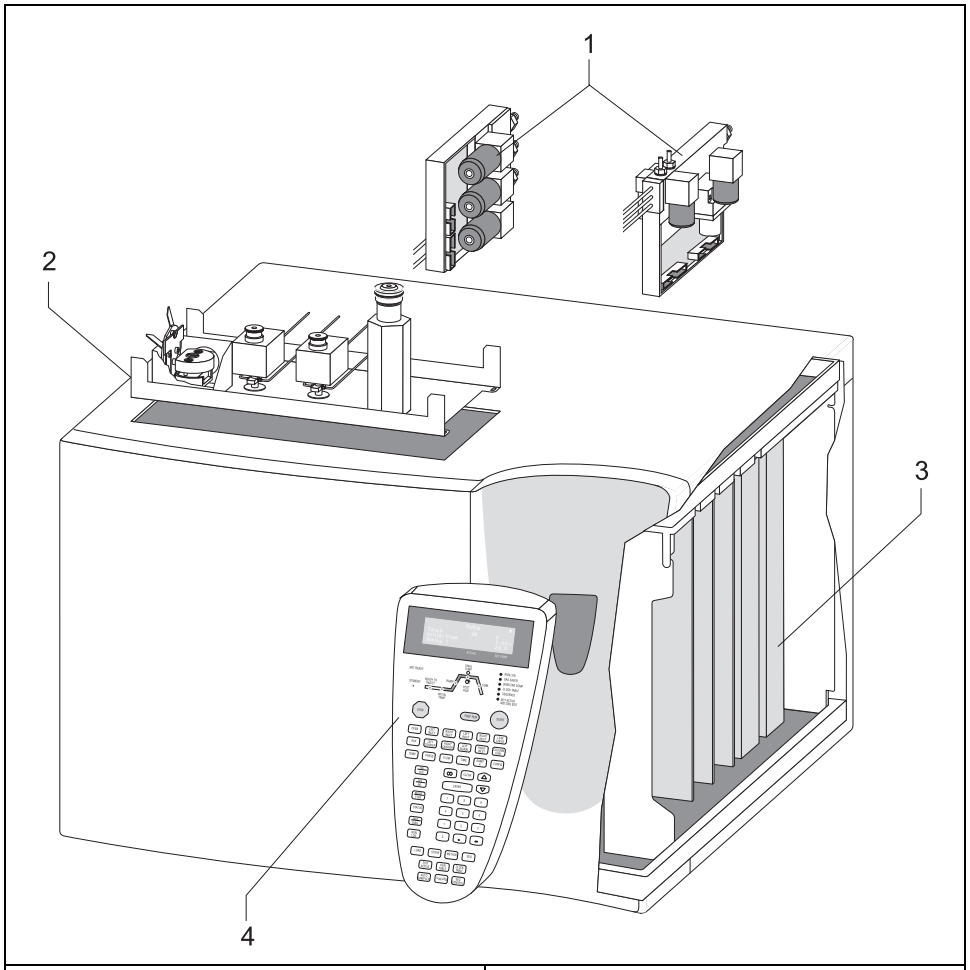

1. Pneumatic Compartment	3. Electronic Compartment
2. Analytical Unit	4. Display and Keyboard

Figure 1-1. TRACE GC Components

Pneumatic Compartment

The pneumatic compartment contains the pneumatic gas control circuits. The circuits can be completely electronic (digital pneumatics), completely analog, or a combination of analog and digital components (mixed pneumatics).

Analytical Unit

The analytical unit consists of two subcompartments:

- the column oven
- the injector and detector compartment

Electronic Compartment

The electronic compartment consists of two subcompartments:

- the high-voltage compartment
- the motherboard for the detector control cards

Display and Keypad

The display and the keypad make up the TRACE GC user interface.

Cleaning and Decontamination

Normal usage of the TRACE GC can cause the exterior to get dirty. Clean the outer surfaces by wiping them with a cloth dampened with water.

In the event that a hazardous material is spilled on or in the instrument, clean the spill according to the procedures in the Material Safety Data Sheet for that substance.

Gas Control

The arrangement of the pneumatic gas control system depends on the detectors configured on the base unit. Three possible configurations of the pneumatic compartment are available:

- digital pneumatics
- analog pneumatics
- mixed pneumatics (analogic and digital)

Digital Pneumatics

In GCs equipped with digital pneumatics, carrier and detector gases are controlled electronically through a series of electronic pneumatic control modules mounted in the pneumatic compartment. The Digital Pressure Flow Control (DPFC) modules control the carrier gas flow and the Detector Gas Flow Control (DGFC) modules control the detector gas flow.

A single DPFC module can alternate the flow of one carrier gas supply between a split/splitless injector and another (non-split/splitless) injector.

Analog Pneumatics

In GCs equipped with analog pneumatics, carrier and detector gases are controlled by a series of conventional, manually-regulated control modules mounted in the pneumatic compartment. Manual control is also referred to as non-DPFC and non-DGFC.

Mixed Pneumatics

In GCs equipped with mixed digital and analog pneumatics, DPFC modules control carrier gas flows, while conventional, or non-DGFC, modules control detector gases.

The detector gas pneumatic circuits can have up to three flow regulators. Each of the three detector gas flows can be regulated separately. You can easily interchange different detectors.

Carrier Gas Control

Carrier gas control is available in DPFC and non-DPFC formats. The DPFC module allows the digital control of the inlet pressure and carrier gas flow.

DPFC Module

The DPFC module features the following:

- constant pressure or constant flow operating modes
- programmed pressure or programmed flow operating modes
- inlet pressure control (in kPa, psi, or bar) and column flow rate control (in mL/min)
- split flow control (in mL/min)
- septum purge flow control (in mL/min)

The DPFC module also allows the following operations:

— **Column Evaluation**
To to automatically calculate the column constant.

— **Leak Check**
To keep the system under control.

— **Gas Saver Function**
To reduce the split flow after an injection to avoid the waste of expensive gases.

There are three types of DPFC modules:

- for OC and PKD injectors
- for PPKD injector
- for S/SL, PTV and PTVLV injectors

Non-DPFC Module

The non-DPFC module allows you to manually control the inlet pressure. There are four types of non-DPFC carrier gas modules:

- for S/SL and PTV injectors, allows manual carrier gas pressure, split flow, and septum purge flow control
- for PPKD injectors, allows manual carrier gas pressure and septum purge flow control
- for OCI and PKD injectors, allows manual carrier gas pressure control
- for PKD injector, allows manual carrier gas flow control

Refer to...

Chapter 4, *Digital Gas Control* and Chapter 5, *Manual Gas Control*

Detector Gas Control

The DGFC module allows the digital control of all the necessary detector gases. The non-DGFC modules have conventional pneumatic controls which require manual detector gas regulation. Both DGFC and non-DGFC gas flows can be automatically switched on and off using the TRACE GC keypad.

They are four types of DGFC and non-DGFC modules

- for ECD only (Type AA)
- for ECD, PID, FPD, FID without make-up gas (Type AB)
- for ECD, PID, FPD, FID with make-up gas (Type AC)
- for NPD, ECD, PID, FPD, FID without make-up gas (Type AD)

Refer to...

Chapter 4, *Digital Gas Control*; Chapter 5, *Manual Gas Control* and Chapter 16.

Injectors

The following injectors are available on the TRACE GC:

- Split Splitless Injector (S/SL)
- On-Column Injector (OCI)
- HOT Cold On-Column Injector (HOT OC)
- Large Volume On-Column Injector (LVOCI)
- Packed Column Injector (PKD)
- Packed Column Injector with Septum Purge (PPKD)
- Programmable Temperature Vaporizing Injector (PTV and PTVLVI)
- Gas Sampling Valves (GSV)

Split Splitless Injector

The Split/Splitless (S/SL) injector minimizes heavy component discrimination with optimized sample transfer to the column. You can use capillary and wide-bore columns with the Split/Splitless injector. With the appropriate adapter kit, you can also use packed columns.

Refer to...

Chapter 6, *Split/Splitless Injector (S/SL)*

On-Column Injector

The On-Column Injector (OCI) allows you to inject a sample directly into a 0.25 or 0.32 mm capillary column and 0.53 mm wide-bore column. Primary and secondary cooling systems keep the injection block at ambient temperature and the injection zone cool to prevent sample vaporization and ensure complete sample transfer from the syringe to the column.

Refer to...

Chapter 7, *On-Column Injector (OCI)*

HOT Cold On-Column Injector

The High Oven Temperature Cold On-Column (HOT OC) injector is a special version of the standard on-column injector. It use an optional HOT device to operate at high oven temperatures.

Refer to...
Chapter 8, *High Oven Temperature Cold On-Column Injector (HOT OC)*

Large Volume On-Column Injector

The Large Volume On-Column Injector (LVOCI) is a special version of the standard on-column injector. It allows automatic introduction of large volumes of liquid sample through the AS 2000 Autosampler.

Refer to...
Chapter 9, *Large Volume On-Column Injector (LVOCI)*

Packed Column Injector

The Packed Column (PKD) injector allows injection directly into metal or glass packed columns or into metal or glass packed columns with glass liners.

Refer to...
Chapter 10, *Packed Column Injector (PKD)*

Purged Packed Column Injector

The Purged Packed Column (PPKD) injector allows sample injection and vaporization into a liner. The sample then transfers to a wide-bore capillary column.

Refer to...
Chapter 11, *Purged Packed Column Injector (PPKD)*

Programmable Temperature Vaporizing Injector

The Programmable Temperature Vaporizing (PTV, PTVLVI) injector allows temperature variation during the injection process in both split and splitless operating modes.

Refer to…

Chapter 12, *Programmable Temperature Vaporizing Injector (PTV)*

Gas Sampling Valves

Two gas sampling valves for manual and automatic sampling are available with the TRACE GC. It allows manual and automatic gas sampling.

Refer to…

Chapter 13, *Gas Sampling Valves (GSV)*

Column Oven

The TRACE GC column oven has a high degree of thermal stability and fast heating and cooling. The air circulation in the oven ensures the column is kept in a thermally homogenous and stable zone. This provides more precise analytical performance and helps prevent chromatogram peak distortion.

The oven can operate at temperatures below ambient with a cryogenic cooling system. The cryo system allows oven temperatures down to –55 °C with liquid carbon dioxide or –99 °C with liquid nitrogen.

Refer To…

Chapter 14, *The Column Oven*

Columns

The column is where the chromatographic separation of the sample occurs. Several types of columns are available for different chromatographic applications:

- capillary columns
- wide-bore capillary columns
- metal packed columns
- glass packed columns

Refer to…
Chapter 15, *Columns*

Detectors

The following detection systems are available for the TRACE GC:

- Flame Ionization Detector (FID)
- Electron Capture Detector (ECD)
- Nitrogen Phosphorus Detector (NPD)
- Photoionization Detector (PID)
- Flame Photometric Detector (FPD) [*Single and Dual Configurations*]
- Thermal Conductivity Detector (TCD)
- Pulsed Discharge Detector (PDD)

All detectors are available with both Digital Gas Flow Control (DGFC) and conventional pressure regulators (non-DGFC).

Flame Ionization Detector

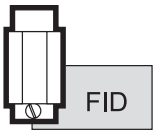

The Flame Ionization Detector (FID) is one of the most useful detectors in GC because of its high sensitivity, good stability and wide range of linearity of response. The FID ensures stable, reproducible, and long-term trouble-free performance.

Refer to…
Chapter 17, *Flame Ionization Detector (FID)*

Electron Capture Detector

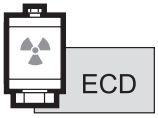

The Electron Capture Detector (ECD) is a non-destructive detector that utilizes the ability of many compounds to capture electrons. It features a very low ionization cell volume and increased resistance to contamination. This ensures high sensitivity and trouble-free operations.

You can easily remove and clean the collecting electrode without disturbing the ^{63}Ni source.
The detector can be heated to 400 °C, extending its application range to higher molecular weight compounds.

Refer to…
Chapter 18, *Electron Capture Detector (ECD)*

Nitrogen Phosphorus Detector

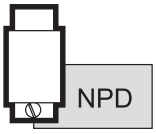

The Nitrogen Phosphorus Detector (NPD), equipped with a ceramic matrix thermionic source, features high sensitivity and long-term stability for analyzing compounds containing nitrogen and phosphorus.

A special thermionic source is also available for Enhanced Nitrogen Selectivity (ENS) mode.

Refer to…
Chapter 19, *Nitrogen Phosphorus Detector (NPD)*

Photoionization Detector

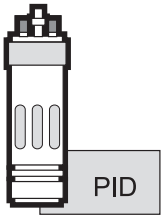

The Photoionization Detector (PID) is mainly used to determine aromatic pollulant compounds in environmental applications and to analyze policyclic aromatic hydrocarbons. It uses a UV lamp to energize the sample eluted from the chromatographic column. The type of lamp used determines the selectivity and sensitivity of the detector. The PID is widely used in the environmental field to test for aromatic and policyclic hydrocarbons.

Refer to…
Chapter 20, *Photoionization Detector (PID)*

Flame Photometric Detector

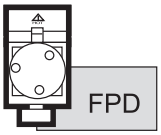

The Flame Photometric Detector (FPD) is based on the emission photometric principle. It is one of the most selective detectors in gas chromatography. The high sensitivity and good linear dynamic range (log scale for sulphur response) provide excellent performance for trace determination of sulphur and phosphorus containing compounds. Some uses of the FPD include pesticide residue analysis, pollution control, and crude oil analysis.
This detector may also operate in Dual FPD Configuration (Twin tube) installing a second photomultiplier tube available as option in the relevant upgrade kit.

Refer to…
Chapter 21, *Flame Photometric Detector (FPD)*

Thermal Conductivity Detector

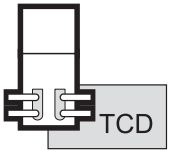

The Thermal Conductivity Detector (TCD) is a dual filament, single column detector. Its response depends on the difference between the thermal conductivity of pure carrier gas and that of carrier gas containing eluted sample. The TCD features output signal amplification by a factor of 10. Two operating control modes are possible: *constant temperature*, which ensures a high degree of filament protection and high sensitivity, and *constant voltage*, which extends the linear dynamic range to greater than 10^5.

Refer to…
Chapter 22, *Thermal Conductivity Detector (TCD)*

Pulsed Discharge Detector

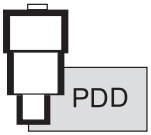

The Pulsed Discharge Detector (PDD) is an universal and highly sensitive non-radioactive and nondestructive detector. It is based on the principle of the photo ionization by radiation arising from the transition of diatomic helium to the dissociative ground state.

Refer to…
Chapter 23, *Pulsed Discharge Detector (PDD))*

Multidetector System

You can use a multidetector configuration to significantly reduce analysis time and increase analytical information for complex samples providing a number of chromatograms from each single injection. Detectors may be arranged:

- **in series**
  with a non-destructive detector (ECD, PID, TCD) followed by a destructive detector (NPD, FPD or FID).
- **in parallel**
  by using an effluent splitter for fused silica capillary column.
  This may be particularly useful for bulk analysis of product formulations, biochemical, and environmental applications.

Detector Base Bodies

The ionization detectors are easily interchangeable. This is made possible by *base bodies* on the analytical unit that provide a connection between the detector and the analytical column.
Two types of detector base bodies are available:

- for packed column
- for capillary column

The type you can use depends on the GC base unit configuration.

Refer to…
Chapter 16, *Detector Overview*

Instrument Automation

The TRACE GC contains several automated features for running the GC, communicating with other analysis equipment, and interacting with a data system.

Internal Automation

You program internal automation by entering run time and real-time clock events in special menus. You can set these events to execute at specified times after injection, at specified times during the day, and on specific days of the week.

Refer to…

Chapter 26, *Automated Functions*

Communication with External Units

You can connect the TRACE GC to external modules and accessories, such as data systems, autosamplers, and mass spectrometers.

Autosampler Interface

AS 2000 and HS 2000 autosamplers can be connected to the GC.

Refer to…

Chapter 24, *AS 2000 Autosampler*
Chapter 25, *HS 2000 Autosampler*

Data Systems Interface

Your TRACE GC generates analog and digital data output when you perform chromatographic analysis. A computer with a data system or a computing integrator can be used to process the data from the GC.

Chrom-Card Data System

Chrom-Card is a PC-based chromatography data-handling system that combines high performance with simplicity of operation. It runs under Windows 95/98 or NT.

Chrom-Card is ideally suited for single channel chromatography data acquisition, but it can collect simultaneously up to four independent channels to accommodate small laboratory needs. Networking is also available for a larger number of channels.

ChromQuest™ Data System

ChromQuest™ is a 32-bit, PC-based data handling system for Windows NT. It provides an open lab approach, with simultaneous acquisition and control of multiple techniques and instrumentation. ChromQuest can control the full range of ThermoQuest instruments. It is truly multitasking.

Computing Integrator

Computing integrators are available in single- or dual-channel versions. Processing capabilities include peak detection and integration, area percent, normalization, external and internal standard calculations, and statistical functions such as standard deviation and variance.

Methods and Sequences

You can program analytical methods and sequences for autosamplers in the TRACE GC menus.

Sequences tell the autosampler where the samples are located in the autosampler tray and the order in which to analyze them. Methods control the analysis parameters used during a sequence. You can store up to ten methods and five sequences in memory.

Refer to…

Chapter 28, *Using Analytical Methods*
Chapter 29, *AS Autosampler Sequences*
Chapter 30, *HS Autosampler Sequences*

2

The TRACE GC User Interface

This chapter gives a general overview of the TRACE GC user interface, including basic information about key functions and menus.

The TRACE GC gas chromatograph is often used with a data system and external devices, such as an autosampler. However, most functions can be programmed through the GC.

The user interface has three components: a four-line display, display LEDs showing the instrument's status, and a keypad for data entry.
Each component is discussed in order from the top down. Figure 2-1 illustrates the complete TRACE GC user interface.

Chapter at a Glance...

Operating Sequences

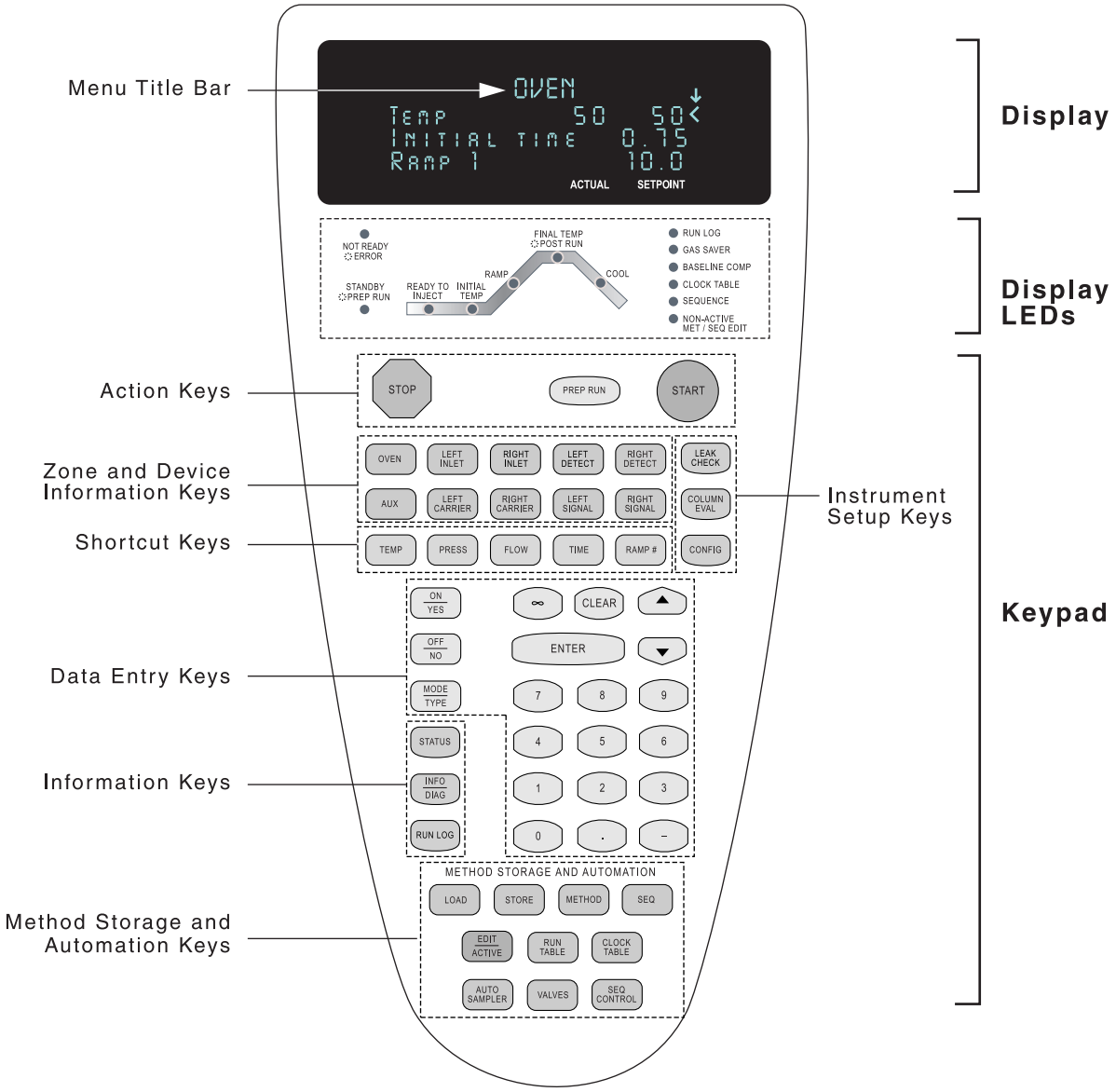

Figure 2-1. The TRACE GC User Interface

The Display

The display shows the menus you use to control the GC parameters, settings, and configuration options. To open a menu, press its associated key. For example, press the **LEFT INLET** key to open the **`LEFT INLET`** menu. The data entry keys allow you to scroll through, set, and modify the menu information.

Figure 2-2 shows the components of a typical menu display.

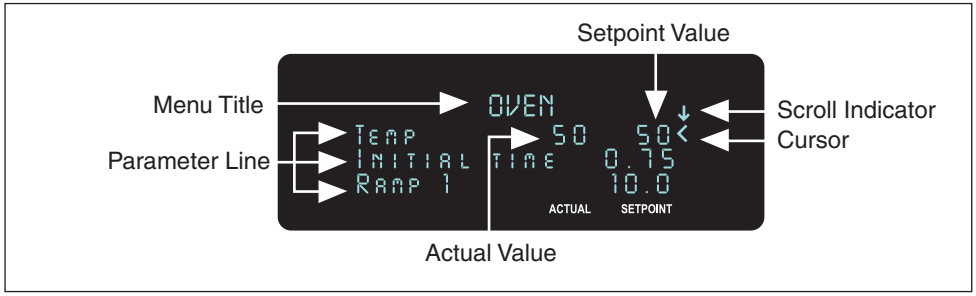

Figure 2-2. Components of the TRACE GC Menu Display

The following are the menu display components:

Menu Title—This is the first line of each menu. The menu title remains at the top of the display and does not move, even when you scroll up and down the menu items.

Cursor—The cursor indicates the currently selected menu item. Use the **UP ARROW** and **DOWN ARROW** keys to move the cursor.

Setpoint Value and *Actual Value*—Many parameters display two values. The first value is the actual value of the GC parameter. You enter the second value, which is the setpoint.

Scroll Indicator—This item is found in the upper right corner of the display. It indicates when not-currently visible menu items exist. It appears in three ways:

- ↓, indicating that you can scroll downward
- ↑, indicating that you can scroll upward

- ↕, indicating that you can scroll in either direction

Currently Visible Menu Parameters—The display shows four lines of a menu at a time. Because the menu title always takes up the first line, three lines show menu items.

Not Currently Visible Menu Parameters—The display shows three menu items at a time. If a menu contains more than three lines, you can use the arrow keys to scroll through the rest of the menu items.

The Display LEDs

The LEDs (Light Emitting Diodes) below the display screen indicate the TRACE GC's operating status.

The Status LEDs

The status LEDs indicate the current operating mode and special settings activated by the operator. Table 2-1 lists and explains each status LED.

Table 2-1. Status LED Descriptions

LED	Description
Not Ready/Error	This LED lights when the GC is not ready to make a run, usually because the specified oven temperature has not been reached. It remains lit if any additional equilibration time has been configured. It blinks when the GC has one or more error conditions.
Standby/Prep Run	This LED lights when the GC is in **Standby**, waiting to be advanced to the **Ready** status. It blinks links while the GC prepares for a run, for example, while opening or closing valves as required by the method or waiting for an external device such as a mass spectrometer.
Run Log	This LED lights when the GC records a run error or a parameter changes during a run.
Gas Saver	This LED lights when the gas saver function is enabled.
Baseline Comp	This LED lights when baseline compensation is used.

Table 2-1. Status LED Descriptions (Continued)

LED	Description
Clock Table	This LED lights when the clock table contains at least one timed event. Refer to *The Clock Table* in Chapter 26 to learn how to schedule timed events.
Sequence	This LED lights when an autosampler sequence is running.
Non-Active Met/ Seq Edit	This LED lights when you press the **EDIT/ACTIVE** key to edit a method or sequence other than the one currently running. Press **EDIT/ACTIVE** again to return to the active mode.

The Oven Ramp LEDs

The oven ramp LEDs indicate the temperature ramp stages during a run. You can follow the progress of a run by observing these LEDs. Figure 2-3 shows the oven ramp LEDs.

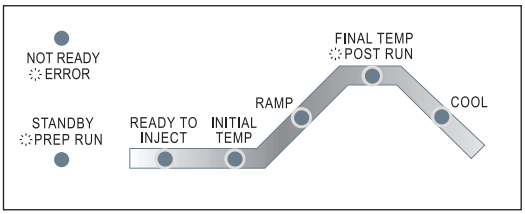

Figure 2-3. Oven Ramp LEDs

Table 2-2 describes the oven ramp LEDs.

Table 2-2. Oven Ramp LED Descriptions

LED	Description
Ready to Inject	This LED lights when the prep run has finished, indicating you can inject a sample or start an autosampler.
Initial Temp	This LED lights when a run starts and remains lit during the initial hold time.

Table 2-2. Oven Ramp LED Descriptions (Continued)

LED	Description
Ramp	This LED lights when the temperature starts to rise for the first ramp and remains lit until the last ramp's temperature has been reached.
Final Temp/Post Run	This LED lights during the final temperature holding time of last ramp and blinks during post-run procedures.
Cool	This LED lights while the oven returns to initial conditions.

The TRACE GC Keypad

The following sections list and describe the keys on the TRACE GC keypad. These keys are used to set up, operate, monitor, and program the instrument. Figure 2-4 illustrates the complete keypad.

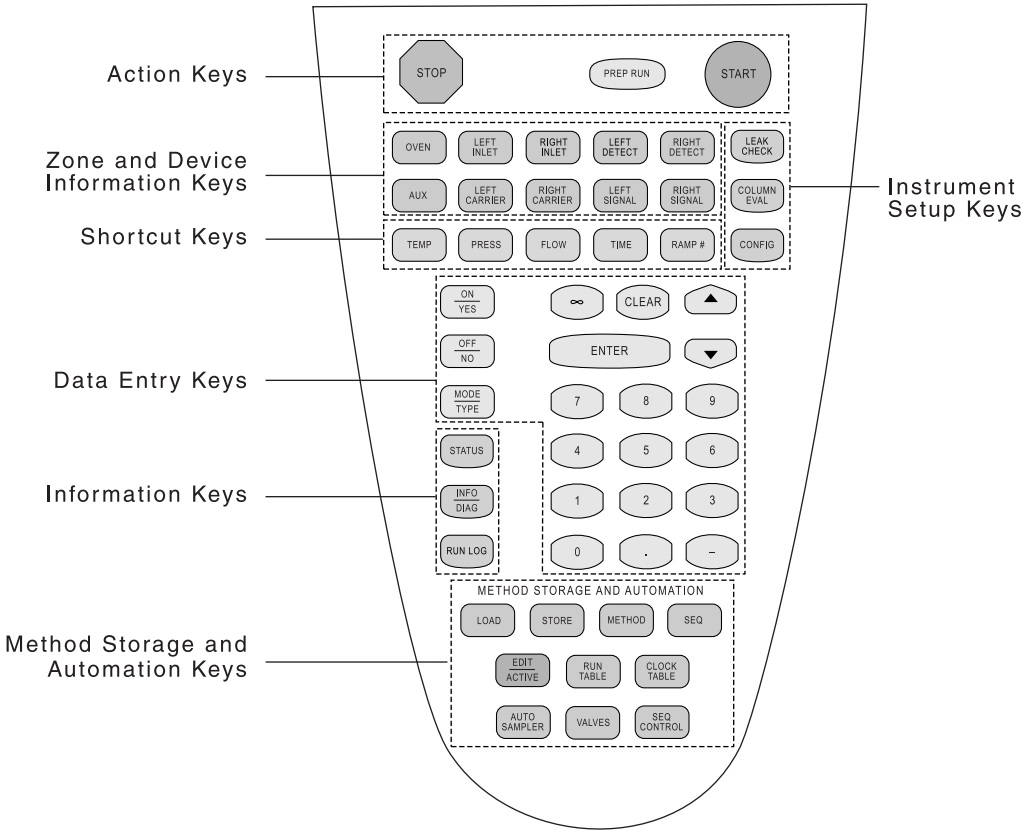

Figure 2-4. The TRACE GC Keypad

Action Keys

Use the three action keys to start or interrupt activities you have specified. For example, you can stop a run that you initiated.

The action keys are shown at the top of Figure 2-4 and in Figure 2-5.

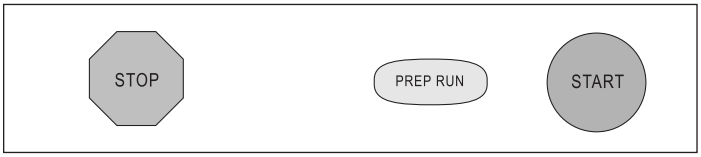

Figure 2-5. Action Keys

Start

The blue **START** key starts a run with programmed parameters after you manually inject a sample into an inlet. When a remote start by another device, such as an autosampler, has been programmed, the system automatically starts after injection.

CAUTION **Do not inject a sample until the Ready to Inject LED is lit.**

Stop

The red octagonal **STOP** key has the following functions:

- stops a run in progress
- resets the TRACE GC from **Ready** to **Not Ready**
- stops column characterization
- stops the leak check function

Prep Run

The light blue **PREP RUN** key activates operator-specified actions which must occur before the GC returns to **Ready to Inject** status. Press this key to return the TRACE GC to initial **Ready to Inject** status conditions for a run. This key activates septum purge conditions, prepares the injector for the type of injection you plan to use (split/splitless, etc.), and resets any gas saver features you have specified in the **`LEFT`** and **`RIGHT CARRIER`** menus. During a prep run, valves

open and close as necessary to prepare the injector before you make your injection. If `Ready Delay` is configured, this additional waiting time for external devices occurs after all other preparations are complete. The Standby/Prep Run LED stops blinking and stays lit to let you know when the GC can be moved to the **Ready to Inject** stage.

Zone and Device Information Keys

These brown keys open the zone and device menus. You enter setpoints for the GC column oven, injectors, detectors, carrier gases, and signals using these menus.

Figure 2-6 shows the zone and device information keys.

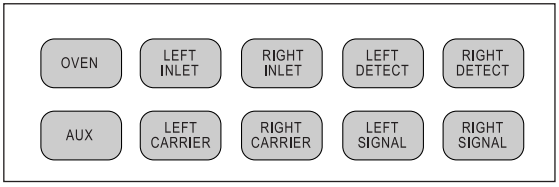

Figure 2-6. Zone and Device Information Keys

Oven

Use the **OVEN** key to set temperatures, times, and ramp rates. You can program up to seven temperature ramps per run. You can also program a timed postrun temperature.

NOTE The cryogenic, or subambient, option allows you to specify oven temperatures lower than room temperature.

Left Inlet/Right Inlet

The parameters displayed when you press the **LEFT INLET** or **RIGHT INLET** key vary depending on the type of inlets installed in your TRACE GC system. Use these keys to set inlet parameters such as pressure and temperature and to turn the pressure and temperature on or off. Any pressure surge information you specify in the **`LEFT`** and **`RIGHT INLET`** menus will override other specified gas pressure information. See the inlet chapters in Section III for more information.

LEFT DETECT

RIGHT DETECT

Left Detector/Right Detector

The items displayed in the detector menus depend on the type of detectors installed and configured on your GC. The TRACE GC supports seven detectors:

- FID (Flame Ionization Detector)
- NPD (Nitrogen Phosphorus Detector)
- ECD (Electron Capture Detector)
- FPD (Flame Photometric Detector)
- PID (Photoionization Detector)
- TCD (Thermal Conductivity Detector)
- PDD (Pulsed Discharge Detector)

Any two may be installed at one time. If you have purchased the auxiliary detector option, you may install an ECD detector in tandem with one of the others.

AUX

Aux

This option controls external devices used with the TRACE GC. It is most commonly used for a stacked detector, Dual FPD, third detector base body, jet separator, valve oven, and MS (mass spectrometer) transfer line.

LEFT CARRIER

RIGHT CARRIER

Left Carrier/Right Carrier

The items displayed in the carrier menus vary with the pressure and flow modes you select.

You have a choice of four flow modes:

- constant pressure mode, which sets pressure only
- constant flow mode, the most often used mode, which maintains a specific flow rate through the column

NOTE In constant pressure mode, you can set pressure but not flow. In constant flow mode, you can set flow but not pressure.

- programmed pressure, which allows you to program up to three ramps of pressure changes
- programmed flow, which allows you to set a certain flow rate and increase it with up to three ramps

Refer to Chapter 5, *Manual Gas Control*, for more information about carrier menu options.

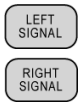

Left Signal/Right Signal

The items displayed on the signal menus depend on the type of detector you have assigned to that location. Options for the ECD are somewhat different from the others.

The first item displays a unitless digital representation of the detector output. The other items help make that output more measurable and meaningful.

Instrument Setup Keys

Use the pink instrument setup keys to perform certain preparatory functions. Figure 2-7 shows these keys.

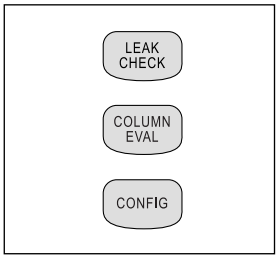

Figure 2-7. Instrument Setup Keys

Column Evaluation

This function allows you to measure the column pneumatic resistance or *column constant*. After the column constant has been determined, you can enter a flow rate without knowing the inside diameter and the length of the column. The column evaluation must be used only when the oven has reached a stable isothermal temperature. It vents the inlet pressure, closes all split/purge valves, and then slowly increases pressure on column, measuring the flow rate with a true

mass flow (TMF) sensor. If there is too little flow to measure accurately, the pressure increases until a measurement is possible. Column evaluation takes only a few minutes to perform.

NOTE Column evaluation assumes there are no leaks in the column connection or gas plumbing lines.

NOTE If you use packed columns, you do not need to perform column evaluation. The packed injector system uses *direct* flow control using a true mass flow sensor. The column evaluation is used for *indirect* flow control through calculated pressure.

LEAK CHECK

Leak Check

Press this key to perform an automatic leak check. The GC measures the column flow with a true mass flow sensor and compares it to a calculated flow value obtained from the original column constant to see if the numbers match. The instrument detects a gas leak if there is a significant difference between the two values.

NOTE The accuracy of the leak check function depends on a leak-free system to begin with.

CONFIG

Config

Use this function to configure your TRACE GC hardware when you first receive it or make changes to it, such as when you install a new detector. See Chapter 3, *Configuration*, for more information.

Shortcut Keys

The light-brown shortcut keys display status of several GC parameters and allow you to jump within menus or to another menu to make adjustments. Figure 2-8 shows the shortcut keys.

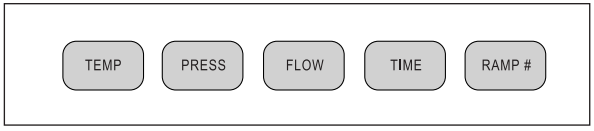

Figure 2-8. Shortcut Keys

TEMP

Temp

Press the **TEMP** key to display the setpoint and actual temperatures in menus with multiple parameters. You can also jump between multiple temperature parameters in menus, such as the **OVEN** and **LEFT** or **RIGHT INLET (PTV)** menus.

PRESS

Press

Use the **PRESS** key to display the setpoint and actual pressure readings and to go to the relevant fields in the carrier and inlet menus.

FLOW

Flow

Press the **FLOW** key to display actual and setpoint gas flows for the inlets, columns, and detectors. You can jump to flow parameter fields in the inlet, carrier, and detector menus.

TIME

Time

Press the **TIME** key to display:

- time
- date
- last run time
- next run time
- elapsed time and time remaining during the current run
- the flow calculator

NOTE If your TRACE GC doesn't have the DGFC option, use the flow calculator to calculate detector flow rates through the bubble flow meter.

RAMP #

Ramp

Press the **RAMP #** key and a number to quickly edit a specific temperature or flow or pressure ramp.

Data Entry Keys

Use the light blue data entry keys shown in Figure 2-9 to enter information in the various menus.

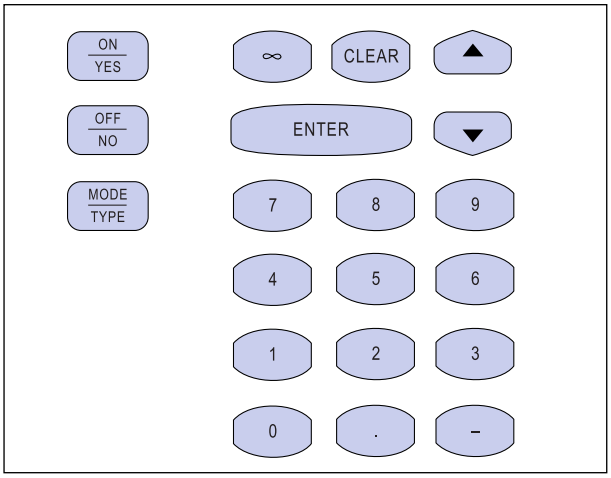

Figure 2-9. Data Entry Keys

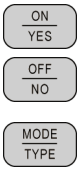

On/Yes, Off/No

Use these keys to turn functions on or off and to answer yes or no questions.

Mode/Type

Use this key to display submenus for menu items that do not have yes/no or on/off choices. Usually you can use the **ENTER** key for the same purpose.

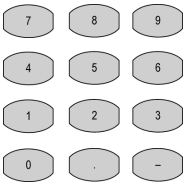

Numeric

The numeric keypad includes numbers from 0–9. The keypad includes a decimal point, minus key, and infinity.

The minus key acts as a negative sign (for entering subambient temperatures) and a range key (for entering sets of numbers such as 1–30).

∞

Use this key to enter infinite times or durations.

Enter

You can use this key to:

- confirm changes to a selected menu item. For instance, after you have selected `Off` as the status for a function, press **ENTER**.
- confirm typed information in memory. For instance, after you have typed `250` as your setpoint oven temperature, press **ENTER**.
- move to a submenu. For instance, press **ENTER** when you have selected `Detector: FID-A` to move from the **`CONFIG RIGHT DETECTOR`** menu to the **`DETECTOR TYPE`** menu. You can use the **MODE/TYPE** key for the same purpose.
- start or stop the timer on the stopwatch feature.

Clear

You can use this key to:

- clear a field in which you have started to enter data.
- back up to the previous menu level. For example, after you have chosen a detector type from the **`DETECTOR TYPE`** menu, press **CLEAR** to return to the **`CONFIG RIGHT DETECTOR`** menu.
- remove programmed events such as:
  - clock time events
  - run time events
- clear a nonfatal error message and return to the previous display.
- reset the timer in the stopwatch feature.

Arrows

Use the arrow keys to scroll through a list of menus or to move the cursor to an editable field.

Information Keys

The pink information keys shown in Figure 2-10 provide status, menu, diagnostic, and run error data.

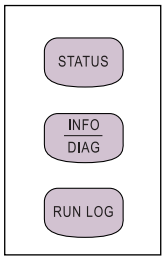

Figure 2-10. Information Keys

Status

This function displays the instrument status and any reasons the GC is in **Not Ready** mode.

Info/Diag

Press this key once to bring up the range, options, and function of a selected menu item, if the item can be edited.

Press the key twice to bring up diagnostic information, including:

- software and hardware information
- power checks
- oven, injector, and detector status

Run Log

This function displays the run log, which records errors that happen during run time. It displays the time and description of any deviations that occur. See *Run Log* in Chapter 26 on page 459 to learn how to use this feature.

Method Storage and Automation Keys

A *method* controls the function of the gas chromatograph during analytical runs. You may specify parameters for any zone and device (including temperature ramps in the oven menu), as well as autosampler parameters and run table timed events. See Chapter 28, *Using Analytical Methods*, for more information.

A *sequence* describes how samples are treated in the injection stage and what method will be used to analyze them. See Chapter 29, *AS Autosampler Sequences* or Chapter 30, *HS Autosampler Sequences* for information about sequences.

Use the brown keys and the blue **EDIT/ACTIVE** key shown in Figure 2-11 to automate and edit certain functions.

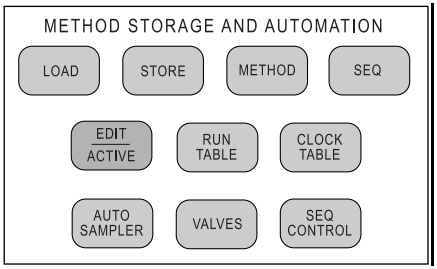

Figure 2-11. Method Storage and Automation Keys

Load

If you don't have a data system, use this feature to recall an analytical method or autosampler sequence. For instance, pressing **LOAD** and choosing `Sequence` and then `5` from subsequent menus will bring up the parameters of sequence #5.

Store

Use this feature to enter an analytical method and/or autosampler sequence into memory.

Method

Use this feature to load, store, or edit an analytical method with programmed temperature and pressure ramps. You can store 10 methods in the TRACE GC in addition to the default method.

SEQ

Seq

Use this feature to load, store, or edit a handling sequence for samples in an autosampler tray. You can store five sequences with five subsequences each.

EDIT ACTIVE

Edit/Active

Press the **EDIT/ACTIVE** key to edit an inactive sequence or method while another is running. Your changes do not affect the current run. Press **EDIT/ACTIVE** again to leave the editing mode and to display menus for current run. Chapter 28, *Using Analytical Methods* or Chapter 29, *AS Autosampler Sequences* or Chapter 30, *HS Autosampler Sequences* to learn how to develop methods and sequences.

RUN TABLE

Run Table

Use this feature to program events to occur during a run, such as a valve opening. You can specify up to ten events for each of ten methods.

CLOCK TABLE

Clock Table

Use this feature to program up to ten events to occur in real time. For instance, you could specify a column bakeout on Wednesday at 8:00 A.M. These events cannot be stored in a method. When the `Mode:` parameter is set to `Active`, you can program the days as a `Specific cycle`.

AUTO SAMPLER

Auto Sampler

Use this feature to control all autosampler functions except alignment. From the TRACE GC or the data system you can specify prewash and postwash instructions, injection methods, and number of injections per vial.

NOTE

If you don't have an autosampler, you will receive an error message when you press this key or any key or menu item associated with the autosampler or its sequences (**SEQ**, **SEQ CONTROL**, **LOAD»**`Sequence`, **STORE»**`Sequence`, or **EDIT/ACTIVE»**`Sequence`). Press any key to return to your previous menu.

VALVES

Valves

Use this feature to specify and control up to four valves, as well as to manually change the state of inlet valves or oven valves.

SEQ CONTROL

Seq Control

Use this feature to start or interrupt a sequence.

General Navigation

The display shows three menu items at a time. A menu title bar in capital letters always appears. Use the **ARROW** keys to scroll through the menus. To see a submenu, press **ENTER** or **MODE/TYPE**. To return to a higher-level menu, press **CLEAR**. Table 2-3 displays examples of the various types of menu items and the ways to edit their fields.

Table 2-3. Sample Menu

Menu	Editing Instructions
`LEFT INLET (S/SL)` ↕	The title bar is always displayed. It cannot be edited. It can change, though, depending on your choices in other menus. For example, if you select an S/SL inlet, this title changes to **`LEFT INLET (S/SL)`**. The arrow indicates that more items are available than the ones appearing in the four-line display.
`Mode: splitless`	Press **ENTER** or **MODE/TYPE** to display the submenu for this item.
`Total flow (57.0)`	The parentheses indicate that this field cannot be edited. Use the arrow keys to scroll to another menu item.
`Split flow 50 50`	The number on the left is the actual value. The number on the right is the setpoint. Use the numeric keypad to enter an integer to change the setpoint, or press the **OFF/NO** key to turn off the option.
`Splitless time 1.00*`	This line shows a time entry. Use the numeric keypad to enter a number with up to two decimal places. The asterisk shows that it is being edited. An asterisk can also indicate the active selection in a list.
`Const sep purge? Y<`	Use the **ON/YES** and **OFF/NO** keys to edit this item. The arrow shows that this item is selected.

OPERATING SEQUENCE

Editing a Menu Item

1. Press the relevant key to select the menu to be edited, for instance, **OVEN**.
2. To select an item within the menu, use the arrow keys to scroll until the cursor (<) points to the item you want to edit.
3. You can change the field's content in several ways:
   a. To choose `On/Off` or `Yes/No`, use the **ON/YES** and **OFF/NO** keys.
   b. Enter a number with the numeric keypad.

NOTE You cannot edit any item in parentheses.

   c. If the field cannot be filled with on/off, yes/no, or a number, press **ENTER** or **MODE/TYPE** to display a submenu of choices. In the submenu, you may use the keypad or scroll with the arrow keys.

NOTE Press the **INFO/DIAG** key once to display the selected field's range and options. If the field cannot be edited, no information will appear. Press **CLEAR** to return to the menu.

4. When you have entered the proper information in the field, press **ENTER** to load the new setpoint. The blinking asterisk disappears after you press **ENTER**. To erase an entry before choosing it, press **CLEAR**.

NOTE If you are working in a submenu, you can also use the **CLEAR** key to return to the higher-level menu.

5. Use the **ARROW** keys to scroll to the next item you want to edit.

Error Conditions

When error conditions occur, a message will appear on the display and the Not Ready/Error LED will blink. For minor conditions such as trying to specify

parameters for items that haven't been installed, the TRACE GC will display a `Not installed or not configured` message.

However, the TRACE GC shuts down under some error conditions, such as unbounded gas flow, hydrogen leaks, and improperly installed or configured heating devices. When the TRACE GC detects these potential hazard conditions, it shuts down.

Unbounded Gas Flow

The TRACE GC shuts down when it senses unbounded gas flow. You need to repair the source of the gas flooding and restart the instrument.

Hydrogen Leak

You can choose hydrogen as a carrier gas only if a hydrogen sensor was installed at the factory. Refer to *Using the Hydrogen Sensor* on page xli for information on this option.

If the hydrogen sensor detects a leak, the TRACE GC shuts down. You need to find and repair the leak before restarting.

Thermal Shutdown

The TRACE GC hardware and software protect the system from *thermal runaways* or uncontrolled temperatures. The hardware and software check for different thermal error conditions and shut down the heated zones if any errors are detected. For proper operation, all potential heated zones must have either:

- an installed sensor, or
- a jumper

If a jumper is used, the heated zone must not be configured.

Hardware Shutdown

The temperature sensors in the TRACE GC create a closed circuit. If a sensor fails, the circuit opens and the hardware initiates thermal shutdown. This shutdown can also happen if hardware containing a temperature sensor, such as an ECD, is removed. The missing temperature sensor opens the circuit and the

hardware initiates thermal shutdown. You must connect a plug to the temperature sensor cable to close the circuit when an ECD is removed from the system.

When the hardware initiates a thermal shutdown, the TRACE GC will display the following message:

```
 TEMPERATURE SHUTDOWN

Temperature zone(s)
exceeded the allowed
hardware limit(s)
```

If a hardware thermal shutdown occurs because of a failed temperature sensor, contact your local ThermoQuest customer service representative for assistance. Refer to Appendix B, *Customer Communication*, for a list of ThermoQuest offices and affiliates worldwide.

Software Shutdown

The TRACE GC software uses the temperature sensors to control the temperature zones. If the software is unable to control the temperature because the leads to the temperature sensor are crossed, the software will initiate a thermal shutdown. If the system is configured for hardware containing a temperature sensor (such as an ECD), the software will initiate thermal shutdown if that hardware is removed.

When the software initiates a thermal shutdown, the TRACE GC displays one of the following messages:

```
 TEMPERATURE SHUTDOWN

Isothermal zone not
controlling or
heating
```

```
 TEMPERATURE SHUTDOWN

Shorted temp sensor
Run temperature
diagnostics
```

If a software thermal shutdown occurs, do the following:

1. Configure the instrument properly, following the configuration instructions in Chapter 3, *Configuration* and in Chapter 16, *Detector Overview*.
2. Shut down the TRACE GC and turn it on again.
3. Resume operating your TRACE GC.

3

Configuration

This chapter describes how to set up the software on your TRACE GC either to match the installed hardware or to reflect your preferences.

Chapter at a Glance...

Operating Sequences

When to Configure

The TRACE GC has few special set up sequences. After you first install and configure the instrument, you will need to reconfigure only after you make changes to the components. You must configure the system when:

- using the TRACE GC for the first time
- adding new components
- changing detectors
- changing carrier gases
- changing column types (to set the appropriate maximum oven temperature)
- replacing a detector board
- changing to an analytical method that requires different hardware

Configuration Main Menu

Press **CONFIG** to open the **CONFIGURE** main menu. The menu items may change, depending on factory settings and current hardware. For instance, if no right inlet is installed, the right inlet item will not appear in the **CONFIGURE** menu. If you press the **RIGHT INLET** key, the following message displays:

```
     RIGHT INLET

Not present, or not
configured
```

Table 3-1 describes the items in the **CONFIGURE** menu. Each item has a submenu.

Table 3-1. Configuration Main Menu

Menu	See...	Comments
CONFIG		This line is the menu title bar.
Oven	page 46	Controls preparatory actions such as automatic prep run, timeout, equilibration time, and ready delay time. It also enables cryogenic options and specifies maximum oven temperature.
Active inlet		This parameter indicates which inlet is operating when a three-way valve is installed.
Left inlet	page 47	This parameter controls the mode for the left inlet.
Left carrier	page 48	This parameter controls the type of carrier gas for the left inlet.
Right inlet	page 47	This parameter controls the mode for the right inlet.
Right carrier	page 48	This parameter controls the type of carrier gas for the right inlet.
Left detector	page 49	This parameter controls the type of detector fuel gas and make-up gas for the left detector.
Right detector	page 49	This parameter controls the type of detector fuel gas and make-up gas for the right detector.
Aux detector		This parameter controls the type of detector fuel gas and make-up gas for the auxiliary detector.

Table 3-1. Configuration Main Menu (Continued)

Menu	See...	Comments
`Aux. Zones`	page 51	This parameter controls the temperature for preconfigured devices. Two auxiliary temperature zones are available.
`Time`	page 51	This parameter sets the time and date.
`Valves`	page 53	This parameter configures up to eight external valves sampling and/or switching valves when present.
`Autosampler`	page 53	This parameter controls an autosampler.
`Handshaking`	page 54	This parameter configures the polarity of signals from external devices.
`Keyboard & display`	page 55	This parameter controls keyboard and display preferences.

Oven

The TRACE GC oven provides great flexibility in controlling and programming temperatures. In the **`CONFIG OVEN`** menu you can set various preparatory parameters as well as activate the cryogenic option, if your GC has that equipment.

Table 3-2. Oven Menu

Parameter	Range or Options	Comments
`CONFIG OVEN`		This line is the menu title bar.
`Auto prep run`	On/Off	This parameter automatically performs run preparations when a sequence is active.
`Auto Start`	On/Off	Allows an automatic *Start* signal.
`PR timeout`	0.00–99.9 min	This parameter returns the GC to standby mode if injection does not occur by the time set and `Auto prep run` is set to `Off`.
`Enable cryo?`[1]	Yes/No	This parameter allows the cryogenic equipment to turn on at a setpoint temperature.

Table 3-2. Oven Menu (Continued)

Parameter	Range or Options	Comments
`Cryo switch temp`	0–450 °C	This parameter specifies the highest temperature for the cryogenic equipment to function.
`Equil time`	0.00–999.99 min	This parameter allows the oven temperature to stabilize after cooling for the length of time set
`Ready delay`	0.0–99.9 min	This parameter allows additional waiting time after the TRACE GC is ready to ensure that any external devices are also ready.
`Max temp`	0–450 °C	This parameter limits the oven temperature to the setpoint.

1. These items appear only when cryogenic equipment has been installed and configured at the factory.

Left/Right Inlet

The **`LEFT`** and **`RIGHT INLET`** menus allow you to configure the type of column inlet you will be using. The settings for split/splitless, packed column, purged packed column, and programmable temperature vaporizing injectors have been preset at the factory, but you may select from the three types of on-column injectors.

Table 3-3 displays the **`CONFIG RIGHT INLET`** menu and its submenu when an on-column inlet is installed.

Table 3-3. On Column Inlet Configuration Menu

Menu	Submenu	Comments

`CONFIG RIGHT INLET`
`Inlet type  OCI  <`
	`RIGHT INLET`
	`OCI  <`
	`OCHOT`
	`LVOCI`
		Press **ENTER** or **MODE/TYPE** to enter the submenu. Scroll with the **ARROW** key until the cursor points to your selection. Press **ENTER** to choose it. Press **CLEAR** to return to the main **`CONFIGURE`** menu.

NOTE To run the HOT OC option, the TRACE GC needs a special temperature sensor. The sensor is installed and configured at the factory.

NOTE If you select `LVOCI` and your instrument does not have a solvent vapor exit valve, the TRACE GC will shut down and display the temperature fault message shown in Figure 3-1. Select another option and restart the instrument.

```
TEMPERATURE SHUTDOWN

Shorted temp sensor
  Run temperature
    diagnostics
```

Figure 3-1. Thermal Shutdown Message

Left/Right Carrier

The left and right carrier menus let you select a carrier gas for each column.

Table 3-4. Left/Right Carrier Menu

Menu	Gas
RIGHT CARRIER	This line is the menu title bar.
He	This selects helium.
H2[1]	This selects hydrogen.
N2	This selects nitrogen.
Ar/CH4 5%	This selects argon/5% methane.
Ar	This selects argon.

1. You cannot choose hydrogen as a carrier gas unless your instrument has a hydrogen sensor. See *Using the Hydrogen Sensor* on page xli for more information.

Left/Right Detector

The TRACE GC works with seven types of detectors:

- FID (Flame Ionization Detector)
- NPD (Nitrogen Phosphorus Detector)
- ECD (Electron Capture Detector)
- PID (Photoionization Detector)
- FPD (Flame Photometric Detector)
- TCD (Thermal Conductivity Detector)
- PDD (Pulsed Discharge Detector)

Because the TRACE GC has three detector board slots, you may alternate between your choice of three detectors. When you purchased your TRACE GC system, you specified which detectors and what options you required. Some of the configuration was done at the factory, but you can assign a column to a specific detector.

To change a detector, you must do the following:

- mount and connect the detector
- configure the GC and the data system
- plumb the appropriate gas supplies as described in Chapter 16, *Detector Overview*

The items in the **`RIGHT`** and **`LEFT DETECTOR`** menus vary, depending on the detectors installed. To see the available detectors, scroll to `Right Detector` or `Left Detector` in the **`CONFIGURE`** menu, then press **MODE/TYPE** or **ENTER**. A list of detectors and their board locations appears:

```
DETECTOR TYPES

*  FID-A

   NPD-B

   ECD-C
```

The letters `A`, `B`, and `C` next to the detector refer to the three available board slots in the TRACE GC. You can assign any of the available detectors as either the right or left detector.

Example: Selecting an FID for the Left Detector

1. Press **CONFIG** and scroll to `Left Detector`.
2. If your GC has the same options as those shown above, your menu selections will be `FID`, `NPD`, and `ECD`. Scroll to `FID` and press **ENTER**.

If you want to change detectors and all detectors have been assigned, you must choose one port and first set it to `none` before you can choose another detector.

NOTE If you want to change to a detector with a secondary heating element (ECD), exchange the detector before changing the configuration. Changing the configuration first could cause a thermal shutdown.

Example: Changing the Right Detector from an FID to an NPD

The types of detectors supported by DGFC depend on the installed detector modules. Refer to Table 16-2 in Chapter 16, *Detector Overview*, for the correct gas supply connections to the detector module inputs.

1. Press **CONFIG**, then press **RIGHT DETECT**.
2. Select `NPD` and press **ENTER**.

Each kind of detector has its own settings and parameters.

NOTE The NPD requires an *AD* type DGFC control module. This module can be used to control FID flame gases. To do this, you must plumb the hydrogen supply to the **Gas 1** input of the DGFC module and leave the **Gas 3** input unconnected.

Auxiliary Zones

The two auxiliary temperature zones control temperature in extra hardware such as a heater, temperature sensor, valve oven, jet separator, mass spectrometer interface, or other end-user devices. These resources must be configured at the factory. However, in this menu you can specify whether to heat the assigned zone. Table 3-5 illustrates the **`Auxiliary Temp Zone`** menu.

Table 3-5. Auxiliary Zone Options

Menu	Options	Comments
`AUXILIARY TEMP ZONE`		This line is the menu title bar.
`Aux 1 zone active N <`	Yes/No	These parameters control the temperature for preconfigured devices.
`Aux 2 zone active N`	Yes/No	

Time

You can set events, such as a column bakeout, to happen at certain times of the day on certain days. Refer to Chapter 26, *Automated Functions*, for more information about programming clock time events. The clock time events refer to the time set in the TRACE GC's clock. You can set this time from the **`CONFIGURE`** menu.

When you open the **`CONFIG TIME`** menu, the following items appear:

- `Time (hhmm)`
- `Date (mmddyy)`

NOTE Time is set on a 24-hour clock.

OPERATING SEQUENCE

Setting the Time

1. Press **CONFIG** to open the **CONFIGURE** menu.
2. Scroll to `Time` and press **ENTER**.
3. Scroll to `Time (hhmm)`.
4. Use the numeric keypad to enter the time. For example, for 8:05 A.M., type `0805`. For 2:30 P.M., type `1430`.
5. Press **ENTER**. Press **CLEAR** to return to the **CONFIGURE** menu.

OPERATING SEQUENCE

Setting the Date

1. Press **CONFIG** to open the **CONFIGURE** menu.
2. Scroll to `Time` and press **ENTER**.
3. Scroll to `Date (mmddyyyy)`.
4. Use the numeric keypad to enter the month, day, and year. For example, for February 3, 1999, type `02031999`. For October 7, 2000, type `10072000`.
5. Press **ENTER**. Press **CLEAR** to return to the **CONFIGURE** menu.

NOTE Once you set the time and date, the values are battery backed-up and will remain even after you turn off the instrument.

Valves

Press **CONFIG** to open the **CONFIGURE** menu, then scroll to `Valves` and press **ENTER** to open the **CONFIGURE VALVES** menu where you may configure up to eight external valves.

```
CONFIGURE VALVES
 Valve#1       <
 ---------------
 Valve#8
```

From each line press **ENTER** to open the menu where you may configure the type of valve.

```
CONFIGURE VALVE#1
 *Gas Sampling
  Switching
  None
```

Select the valve type of your interest and press **ENTER**.

To program these valves refer to Chapter 13 and Chapter 27.

Autosamplers

Most autosampler functions can be controlled from the TRACE GC or the data system. Only the alignment must be programmed at the autosampler.

Press **CONFIG** to open the **CONFIGURE** menu, then scroll to Autosampler and press **ENTER** to open the **CONFIG AUTOSAMPLER** menu.
Table 3-6 describes the autosampler configuration options.

Table 3-6. Autosampler Configuration

Menu	Range	Comments
CONFIG AUTOSAMPLER		This line is the menu title bar.
Program inj speed	Yes/No	This parameter allows you to specify a slower plunger speed, such as for a large volume injection.
Use internal standard	Yes/No	This parameter allows you to inject an internal standard with the sample.

Handshaking

The TRACE GC can cooperate with other instruments, such as an autosampler or mass spectrometer, during analysis. To allow other devices to run properly, you must indicate how the signal will change. For example, the menu in Table 3-7 specifies that another device will start the GC when the remote start signal changes from high to low. Press **CONFIG** to open the **CONFIGURE** menu, then scroll to Handshaking and press **ENTER** to open the **HANDSHAKING** menu.

Table 3-7. Handshaking Configuration Menus

Menu	Submenus	Comments
HANDSHAKING		This line is the menu title bar.
Remote start in	REMOTE START Input pulse: Low to High High to Low	This parameter allows another device to start the TRACE GC. For the AS 2000 and HS 2000 autosamplers, you must select High to Low.
Inhibit READY in	INHIBIT READY Inhibit readiness: When high When low	This parameter delays readiness until the GC receives a signal from another device.

Table 3-7. Handshaking Configuration Menus

Menu	Submenus	Comments

`End of run out`	`END OF RUN`
	`Output pulsed:`
	`Low to High`
	`High to Low`
		This parameter signals another device, such as an integrator, that the run has ended.

`Start of run out`	`START OF RUN`
	`Output pulsed:`
	`Low to High`
	`High to Low`
		This parameter signals another device, such as an integrator, that the run has started.

`GC READY out`	`READY OUT`
	`Show readiness:`
	`When high`
	`When low`
		This parameter signals another device that the GC is ready. For the AS 2000 and HS 2000 autosamplers, you must select `When Low`.

`Prep Run out`	`IN PREP RUN`
	`Indicate preparing:`
	`When high`
	`When low`
		This parameter signals another device that the GC is preparing for a run.

Keyboard and Display

This menu allows you to customize your keyboard and display. Table 3-8 describes these options.

`Keyboard beep` leads to a submenu where you can specify when you want the GC to alert you with a keyboard sound. To move to the submenu, select `Keyboard beep` and press **ENTER** or **MODE/TYPE**.

Table 3-8. Keyboard & Display Menu

Menu	Options	Comments
`KEYBOARD & DISPLAY`		This line is the menu title bar.
`Keyboard lock <`	On/Off	This parameter prohibits any menu edits.

Table 3-8. Keyboard & Display Menu

Menu	Options	Comments
`Keypad beep`	Refer to Table 3-9.	This parameter causes the GC to beep when you press the keys specified in the submenu.
`Warning beep`	On/Off	This parameter causes the GC to beep for certain error conditions, such as low carrier gas pressure or unbounded flow.
`Delimiter type`	. or ,	This option allows you to select a period or comma as a decimal marker.
`Pressure units`	kPa, psi, bar	This option allows you to select the pressure unit for display.
`Run log active`	Yes/No	This option activates a run log during a run.

Table 3-9 describes each of the keyboard beep options.

Table 3-9. Keyboard Beep Submenu

Menu	Options	Comments
`KEYBOARD BEEP`		This line is the menu title bar.
`Any key press`	On/Off	This parameter causes the GC to beep when you press any key on keypad.
`Enter key press`	On/Off	This parameter causes the GC to beep when you press **ENTER**.
`On invalid key`	On/Off	This parameter causes the GC to beep when the key you press is not a valid option, such as a numeric entry instead of **ON**/**OFF**.
`Never`	On/Off	This option turns off keyboard beeps.

SECTION II

Gases Control

This section contains information on controlling and programming the detector and carrier gas flows to the TRACE GC.

Chapter 4, *Digital Gas Control*, describes the automatic (DPFC and DGFC) gas control features of the TRACE GC and contains the instructions to program and regulate the GC carrier gases control.

Chapter 5, *Manual Gas Control*, describes the manual (Non-DPFC and Non-DGFC) gas control features of the TRACE GC and contains the instructions to regulate the GC carrier gases control.

4

Digital Gas Control

This chapter describes the automatic DPFC and DGFG gas control features of the TRACE GC and contains the instructions to program and regulate the GC carrier, detector and auxiliary gases control.

Chapter at a Glance...

Operating Sequences

Gas Control with DPFC and DGFC Modules

The GC electronically control all the gas flows and pressures in the instrument. It provides:

- flow and/or pressure control for all injectors, including flow and pressure programming for carrier gas
- flow control for all detector gases
- a gas saver mode to reduce carrier gas consumption with the Split/Splitless (S/SL) and the Programmable Temperature Vaporizing (PTV) injectors.

The GC automatically identifies injectors and detectors with electronic control modules during power-up. Some information must be entered manually by the user. This operation is called *configuration*.

Gas Supplies

The configuration of your TRACE GC determines the carrier, make-up, and fuel gas requirements. The gas flow modules installed determine whether you regulate the gas flow and pressure through digital DPFC and DGFC pneumatic control.

NOTE You should not connect any gases to the TRACE GC that are not referenced in the documentation.

Commonly used gases are nitrogen, helium, hydrogen, and air. Other gases such as argon and argon/methane are used more rarely. The gases required for different injectors and detectors are discussed in detail in Chapter 1 of the TRACE GC *Site Preparation and Installation Manual*.

Pressure Units

You can specify the pressure units the TRACE GC displays. The default pressure unit is the kilopascal (kPa). You specify the pressure units in the **CONFIGURE** menu as described in the *Configuring the Pressure Unit* operating sequence on page 61.

Table 4-1 gives a brief conversion guide for the most commonly used pressure units in gas chromatography.

Table 4-1. Pressure Units Conversion

To convert	To	Multiply by
kPa	bar	0.01
	psi	0.145
bar	kPa	100
	psi	14.51
psi	kPa	6.89476
	bar	0.0689476

100 kPa = 1 bar = 14.51 psi

OPERATING SEQUENCE

Configuring the Pressure Unit

The pressure unit is already configured to kPa (kilopascals). To change the configuration, proceed as follows:

1. Press **CONFIG**, scroll to `Keyboard and Display`, then press **ENTER**.
2. Scroll to `Pressure Unit` and press **ENTER** to open the **`PRESSURE UNITS`** menu.

```
        PRESSURE UNITS
  psi
* kPa                    <
  bar
```

3. Scroll to the pressure unit to be used and press **ENTER** twice to confirm the selection. An asterisk appears to the left of the pressure unit selected.

DPFC Carrier Gas Control

There are three types of DPFC modules as shown in Figure 4-1. The type of module installed depends on the injector in use. Each type of DPFC module is available into two versions according to the full scale (f.s.) of the flow regulator.

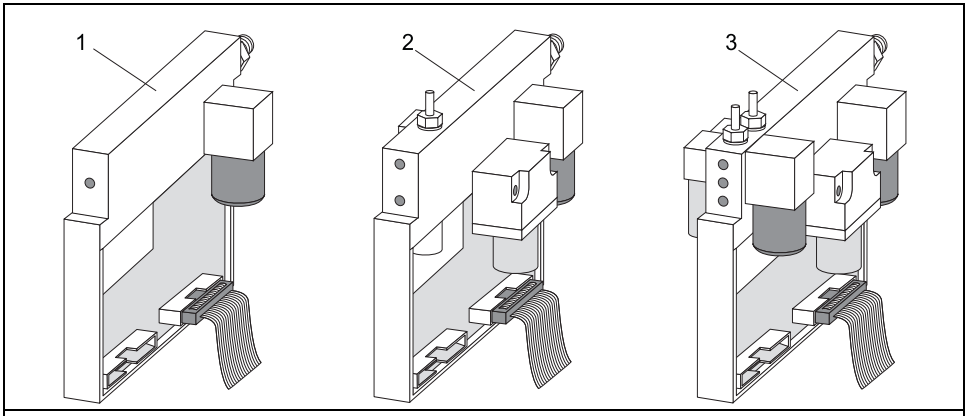

1. DPFC Module (250 kPa or 700 kPa f.s) for OCI and PKD Injectors
2. DPFC Module (250 kPa or 700 kPa f.s.) for PPKD Injector
3. DPFC Module (250 kPa or 700 kPa f.s.) for S/SL and PTV Injectors

Figure 4-1. DPFC Modules

You enter the DPFC gas control setpoints in the **CARRIER** and **INLET** menus.

The carrier gas menu includes all of the parameters for controlling gas flow. For a detailed description of the **CARRIER** menu items and ranges, refer to paragraph *Carrier Gas Menu* on page 65.
For a detailed description of the **INLET** menu, refer to the relevant chapter according to the injector in use.

The electronic control of the carrier gas allows also the following operations.

- **Column Evaluation**
  Refer to the *Performing a Column Evaluation* operating sequence in Chapter 15 for more information.

- **Automatic Leak Check**
  Refer to the *Performing an Automatic (DPFC) Leak Check* operating sequence in Chapter 15 for more information.

DPFC Gas Flow Vents

When present, the septum purge and the split flow exit through the vents on the top of the instrument as shown in Figure 4-2.

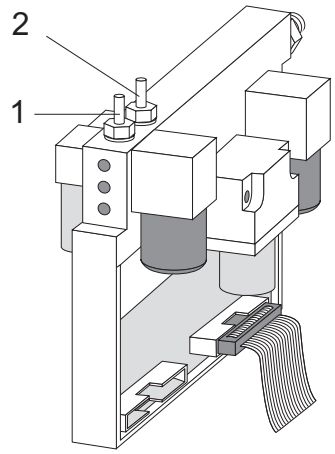

1. Split Line Vent	2. Septum Purge Line Vent

Figure 4-2. DPFC Split Flow and Septum Purge Flow Vents

DGFC Detector Gases Control

There are four types of DGFC modules as shown in Figure 4-3. The type of module installed depends on the detector in use and on the presence of the make-up gas line.

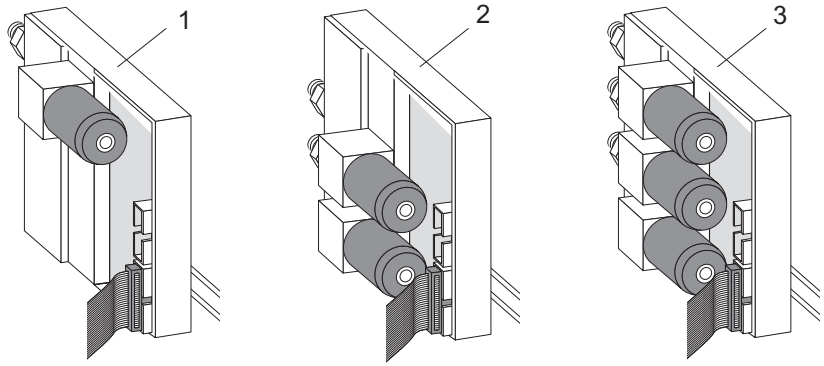

1. DGFC Module type **AA** for ECD only
2. DGFC Module type **AB** for ECD, PID, FPD, FID without Make-up gas

3a. DGFC Module type **AC** for ECD, PID, FPD, FID with Make-up gas
3b. DGFC Module type **AD** for NPD, ECD, PID, FPD, FID without Make-up gas

Figure 4-3. DGFC Modules

You enter the gas control setpoints in the **DETECTOR**, and **AUXILIARY** menus. Detector gases are discussed in Chapter 16.

Carrier Gas Menu

This paragraph explains the electronic programming and control of the GC carrier gases. The Digital Pressure Flow Control (DPFC) modules regulate carrier gases electronically. You control the gas flow by programming parameters in the carrier gas menu.

The **CARRIER** menu includes the control parameters for the carrier gas, regardless of the carrier gas type.
Parameters change according to the operating flow mode chosen: constant flow, constant pressure, programmed flow or programmed pressure.

Press **LEFT CARRIER** or **RIGHT CARRIER** to display the **LEFT** or **RIGHT CARRIER** menu.

```
        LEFT CARRIER

Col. Flow     2.00  2.00<
Pressure            10.6
Flow mode        con flow
```

Flow Mode

The `Flow mode` parameter displays the currently selected flow mode. The four options are:

- constant flow
- constant pressure
- programmed flow
- programmed pressure

Scroll to the `Flow mode` parameter and press **MODE/TYPE** or **ENTER** to open the flow mode menu:

```
   LEFT CARRIER FLOW MODE
* Constant flow          <
  Constant pressure
  Programmed flow
  Programmed pressure
```

Scroll to the flow mode you want to use and press **ENTER** to confirm the selection. An asterisk appears to the left of the flow mode selected. The items in the **CARRIER** menu change depending on the flow mode selected. Tables 4-2 through 4-5 show the **CARRIER** menu for each of the four modes.

Constant Flow Mode

In constant flow mode, the *column flow* is kept constant throughout the analysis. The pressure at the column head will change with the column temperature to maintain a consistent flow.
The DPFC module can control the flow indirectly or directly.

Indirect Control of the Column Flow

In this mode, the column flow is controlled by regulating the pressure as the temperature changes. This type of control is generally used with capillary columns and S/SL, OCI, or PTV injectors.

Direct Control of the Inlet Flow to the Injector

In this mode, gases are controlled through *true mass flow* control. This mode is used with packed column inlets without any split or purge lines, where the total flow to the injector is the column flow.

Table 4-2. Carrier Menu in Constant Flow Mode

Menu	Range	Comments
`LEFT CARRIER`		This line is the menu title bar.
`Col. flow`	On/Off, 0–100 mL/min	This line shows the constant flow rate of carrier gas passing through the column. Press **ON** to display the actual and setpoint values. Press **OFF** or **0** to turn off all inlet flows.
`Pressure`	Not editable	This line displays the pressure setpoint value that depends on the flow set.
`Flow mode`	`Const flow`	This line indicates the flow mode selected.
`Gas saver flow`[1]	On/Off, 0–500 mL/min	This line indicates the gas saver flow. Press **ON** to turn on the gas saver flow and display the setpoint value. Press **OFF** to turn off the gas saver function. The flow is retained in memory.
`Saver time`[1]	0.00–999.99 min	This line shows the gas saver time, which is the time in the run at which the gas saver function starts to operate. This line does not appear if `Gas saver flow` is `Off`.
`Vacuum comp`	On/Off	Use this parameter only when the TRACE GC is used with a mass detector.

1. This parameter is displayed only for the S/SL and PTV injector.

Constant Pressure Mode

In constant pressure mode, the pressure at the column head is kept constant throughout the analysis. During a temperature program, the column flow decreases due to the increase of the carrier gas viscosity.

Table 4-3. Carrier Menu in Constant Pressure Mode

Menu	Range	Comments
`LEFT CARRIER`		This line is the menu title bar.
`Col. flow`	Not editable	This line displays the actual column flow value that depends on the pressure set.
`Pressure`	On/Off, 2–250 kPa[1] or 7–700 kPa	This line shows the constant pressure of the carrier gas passing through the column. Press **ON** to display the actual and setpoint values. Press **OFF** or **0** to turn off all inlet pressures.
`Flow Mode`	`Const Pres`	This line indicates the flow mode selected.
`Gas Saver flow`[2]	On/Off, 0–500 mL/min	This line indicates the gas saver flow. Press **ON** to turn on the gas saver flow and display the setpoint value. Press **OFF** to turn off the gas saver flow. The flow is retained in memory.
`Gas Saver time`[2]	0.00–999.99 min	This line shows the gas saver time, which is the time in the run at which the gas saver function starts to operate. This line does not appear if `Gas saver flow` is `Off`.
`Vacuum comp`	On/Off	Use this parameter only when the TRACE GC is used with a mass detector.

1. The default pressure unit is kPa. You can change the units to psi or bar in the **`CONFIGURE`** menu.
2. This parameter is displayed only for the S/SL and PTV injectors.

Programmed Flow Mode

In programmed flow mode, the column flow rate can be programmed to change during the analytical run. In this mode, up to three flow ramps can be entered.

Table 4-4. Carrier Menu in Programmed Flow Mode

Menu	Range	Comments
`LEFT CARRIER`		This line is the menu title bar.
`Col. flow`	On/Off, 0–100 mL/min	This line shows the flow rate of the carrier gas passing through the column. Press **ON** to display the actual and setpoint values. Press **OFF** or **0** to turn off all inlet pressures.
`Pressure`	Not editable	This line displays the pressure value that depends on the flow set.
`Flow mode`	`Prog flow`	This indicates the flow mode selected.
`Initial flow`	0.0–100 mL/min	This line defines the beginning flow rate.
`Initial time`	0–999.99 min	This line defines the length of time the GC maintains the `Initial flow`.
`Ramp 1`	On/Off, ∞, 0–120 mL/min^2	This line defines the ramp rate in mL/min to reach the *final flow rate*. Press **ON** to enable the ramp and display the setpoint value.
`Final flow`	0–100 mL/min	This parameter defines the final flow rate the carrier gas will reach at the end of the ramp rate.
`Final time`	0–999.99 min, ∞	This parameter defines how long the corresponding `Final flow` must be kept.
`Ramp 2-3`	On/Off, ∞, 0–120 mL/min^2	To program additional ramps, press **ON** and enter the ramp rates in mL/min^2. The `Final flow` and `Final time` menu items for the ramp are displayed. The ranges and functions of these menu items are identical to the `Final flow` and `Final time` menu items for `Ramp 1`.
`Gas Saver Flow`[1]	On/Off, 0–500 mL/min	This line indicates the gas saver flow. Press **ON** to turn on the gas saver flow and to display the setpoint value. Press **OFF** to turn off the gas saver flow. The flow is retained in memory.

Table 4-4. Carrier Menu in Programmed Flow Mode (Continued)

Menu	Range	Comments
`Saver time`[1]	0.00–999.99 min	This line shows the gas saver time, which is the time in the run at which the gas saver function starts to operate. This line does not appear if `Gas saver flow` is `Off`.
`Vacuum comp`	On/Off	Use this parameter only when the TRACE GC is used with a mass detector.

1. This parameter is displayed only for the S/SL and PTV injectors.

Programmed Pressure Mode

In programmed pressure mode, the inlet pressure can be programmed to change during the analytical run. In this mode, up to three pressure ramps can be entered.

Table 4-5. Carrier Menu in Programmed Pressure Mode

Menu	Range	Comments
`LEFT CARRIER`		This line is the menu title bar.
`Col. flow`	Not editable	This line displays the actual column flow value that depends on the pressure set. This parameter is not editable in programmed pressure mode.
`Pressure`	On/Off, 2–250 kPa or 7–700 kPa[1]	This line shows the constant pressure of the carrier gas passing through the column. Press **ON** to display the actual and setpoint values. Press **OFF** or **0** to turn off all inlet pressures.
`Flow mode`	`Prog Pres`	This line indicates the flow mode selected.
`Initial Pressure`	2–250 kPa or 7–700 kPa	This line defines the initial pressure.
`Initial time`	0–999.99 min,∞	This line defines the length of time the GC maintains the initial pressure.
`Ramp 1`	On/Off, ∞, 0–120 kPa/min	This line defines the ramp pressure in kPa/min to reach the `Final pressure`. Press **ON** to enable the ramp and display the setpoint value.

Table 4-5. Carrier Menu in Programmed Pressure Mode (Continued)

Menu	Range	Comments
`Final pressure`	2–250 kPa or 7–700 kPa[1]	This parameter defines the final pressure the carrier gas will reach at the end of the ramp rate. This line does not appear unless a ramp has been activated.
`Final time`	0–999.99 min, ∞	This parameter defines how long the corresponding *final pressure* must be maintained. This line does not appear unless a ramp has been activated.
`Ramp 2-3`	On/Off, ∞, 0–120 kPa/min	To program additional ramps, press **ON** and enter the ramp rates in kPa/min. The `Final pressure` and `Final time` menu items for the ramp are displayed. The ranges and functions of these menu items are identical to the `Final pressure` and `Final time` menu items for `Ramp 1`.
`Gas Saver Flow`[2]	On/Off, 0–500 mL/min	This line indicates the gas saver flow. Press **ON** to turn on the gas saver flow and display the setpoint values. Press **OFF** to turn off the gas saver flow. The flow is retained in memory.
`Saver time`[2]	0–999.99 min	This line shows the gas saver time, which is the time in the run at which the gas saver function starts to operate. This line does not appear if `Gas saver flow` is `Off`.
`Vacuum comp`	On/Off	Use this parameter only when the TRACE GC is used with a mass detector.

1. The default pressure unit is kPa. You can change the units to psi or bar in the **`CONFIGURE`** menu.
2. This parameter is displayed only for the S/SL and PTV injectors.

OPERATING SEQUENCE

Configuring the Carrier Gas

To change the carrier gas configuration, proceed as follows:

1. Press **CONFIG** and scroll to `Left carrier` or `Right carrier`.
2. Press **MODE/TYPE** to display a submenu of carrier gases.

```
     CONFIG LEFT CARRIER
* Helium                    <
  Hydrogen
  Nitrogen
  Ar/CH4  5%
  Argon
```

3. Scroll to the gas to be used and press **ENTER** to confirm the selection. An asterisk appears on the left of the gas selected.

NOTE Hydrogen will always be displayed, but it can be selected only if a hydrogen sensor is installed in the column oven. If not, the message **`Hydrogen sensor required`** will be displayed if you try to select hydrogen.

OPERATING SEQUENCE

Programming the Carrier Gas Parameters

Before you begin this procedure, do the following:

- Check that the carrier gas type is correct for the analysis.

NOTE When you install a new column, you must perform a column evaluation.

- Press **LEFT CARRIER** or **RIGHT CARRIER** to open the appropriate **`CARRIER`** menu.

Select the Carrier Flow Mode

1. Scroll to `Flow mode` and press **MODE/TYPE** or **ENTER**.
2. Scroll to the mode you want and press **ENTER**.

Enter the Initial Flow or Pressure

1. If you selected `Constant flow` mode, scroll to `Col. flow` and enter the desired initial value. Press **ENTER**. The GC calculates the pressure necessary and adjusts the pressure as necessary to maintain the constant flow.
2. If you selected `Constant pressure` mode, scroll to `Pressure` and enter the desired initial value. Press **ENTER**.

Enter a Flow or Pressure Program

When you select programmed flow or programmed pressure, the **`CARRIER`** menu contains parameters for up to three program ramps.

1. If you selected `Prog flow`, scroll to `Initial flow` and enter the desired value. Press **ENTER**.
2. If you selected `Prog pressure`, scroll to `Pressure` and enter the desired value. Press **ENTER**.
3. Scroll to `Initial time` and enter a value. This parameter ends the initial part of the program.

Program the Ramps

1. To program a ramp, scroll to `Ramp 1` and enter the value.
2. Scroll to `Final flow 1` or `Final pres 1` and enter the final value for the ramp.
3. Scroll to `Final time 1` and enter the final time for Ramp 1. This operation ends the first ramp setting.
4. If you do not want a second ramp, leave `Ramp 2` set to `Off`. To enter a second ramp, scroll to `Ramp 2` and enter the value.
5. Scroll to `Final flow 2` or `Final pres 2` and enter the final value for the ramp.
6. Scroll to `Final time 2` and enter the final time for Ramp 2. This operation ends the second ramp setting.
7. If you do not want a third ramp, leave `Ramp 3` set to `Off`. To enter a third ramp, scroll to `Ramp 3` and enter the value.
8. Scroll to `Final flow 3` or `Final pres 3` and enter the final value for the ramp.
9. Scroll to `Final time 3` and enter the final time for Ramp 3. This operation ends the third ramp setting.

5

Manual Gas Control

This chapter describes the manual Non-DPFC and Non-DGFC gas control features of the TRACE GC and contains the instructions to regulate the GC carrier, detector and auxiliary gases control.

Chapter at a Glance...

Operating Sequences

Gas Control with Non-DPFC and Non-DGFC

In GCs equipped with conventional gas flow control (non-DPFC and non-DGFC) modules, the carrier and detector gases must be manually set and checked using a bubble meter or other flowmeter. Refer to paragraph *Measuring the Gas Flow* for details.

These modules provide:

- flow and/or pressure control for all injectors
- flow control for all detector gases

Gas Supplies

The configuration of your TRACE GC determines the carrier, make-up, and fuel gas requirements. The gas flow modules installed determine whether you regulate the gas flow and pressure through conventional (non-DPFC and non-DGFC) pneumatic control.

NOTE You should not connect any gases to the TRACE GC that are not referenced in the documentation.

Commonly used gases are nitrogen, helium, hydrogen, and air. Other gases such as argon and argon/methane are used more rarely. The gases required for different injectors and detectors are discussed in detail in Chapter 1 of the TRACE GC *Site Preparation and Installation Manual*.

Non-DPFC Carrier Gas Control

There are four types of non-DPFC modules. The type of module installed in your GC depends on the injectors in use.
The pressure value is monitorized on the pressure gauge close to the regulator.
Figure 5-1 shows one of the non-DPFC carrier gas modules.

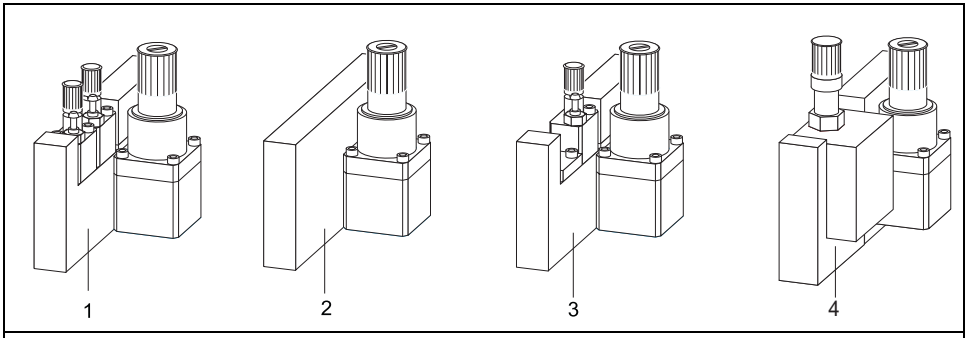

1. Non-DPFC Module (600 kPa f.s.) for S/SL and PTV injectors
2. Non-DPFC Module (600 kPa f.s.) for OCI injector
3. Non-DPFC Module (600 kPa f.s.) for PPKD injector
4. Non-DPFC Pressure and Flow Module (600 kPa f.s.) for PKD injector

Figure 5-1. Non-DPFC Module

For a detailed description of the carrier gas regulation with non-DPFC modules, refer to paragraph, *Carrier Gas Regulation with Non-DPFC* on page 80.

Non-DPFC Gas Flow Vents

When present the septum purge and the split flows exit through the vents on the top of the instrument as shown in Figure 5-2.

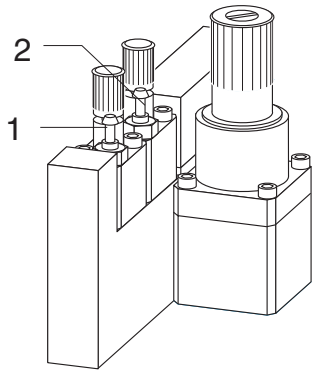

1. Split Line Vent	2. Septum Purge Line Vent

Figure 5-2. non-DPFC Split Flow and Septum Purge Flow Vents

Non-DGFC Detector Gas Control

The non-DGFC modules have conventional pneumatic controls which require manual detector gas regulation by turning the relevant regulation screw.

There are four types of non-DGFC modules as shown in Figure 5-3. The type of module installed depends on the detector in use and on the presence of the make-up gas line.

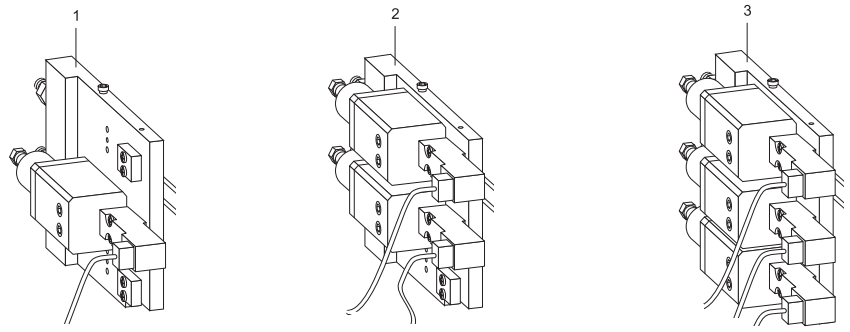

1. Non- DGFC Module type **AA** for ECD only
2. Non-DGFC Module type **AB** for ECD, PID, FPD, FID without Make-up gas

3a. Non-DGFC Module type **AC** for ECD, PID, FPD, FID with Make-up gas

3b. Non-DGFC Module type **AD** for NPD, ECD, PID, FPD, FID without Make-up gas

Figure 5-3. Non-DGFC Modules

The flow is measured at the exit of the detector base body. Enter the relevant inlet menu to turn the flow on/off enter. Detector gases are discussed in Chapter 16.

Carrier Gas Regulation with Non-DPFC

This chapter explains the manual control of the GC carrier gases.

Conventional non-DPFC modules can not be identified by the GC then a carrier gas menu can not be available.
In fact, pressing **LEFT CARRIER** or **RIGHT CARRIER** to display the **`LEFT`** or **`RIGHT CARRIER`** menu, the following message will be displayed.

```
LEFT CARRIER
Not present, or
not configured.
```

CAUTION **Do not try to configure Left or Right Carrier when your GC is equipped with non-DPFC modules.**

To manually regulate carrier gas refer to the following operating sequence.

OPERATING SEQUENCE

Non-DPFC Gases Regulation

This operating sequence contains the instructions to regulate the carrier gas pressure, the split and septum purge gas flows and the gas flow for packed column. Refer to Figure 5-4.

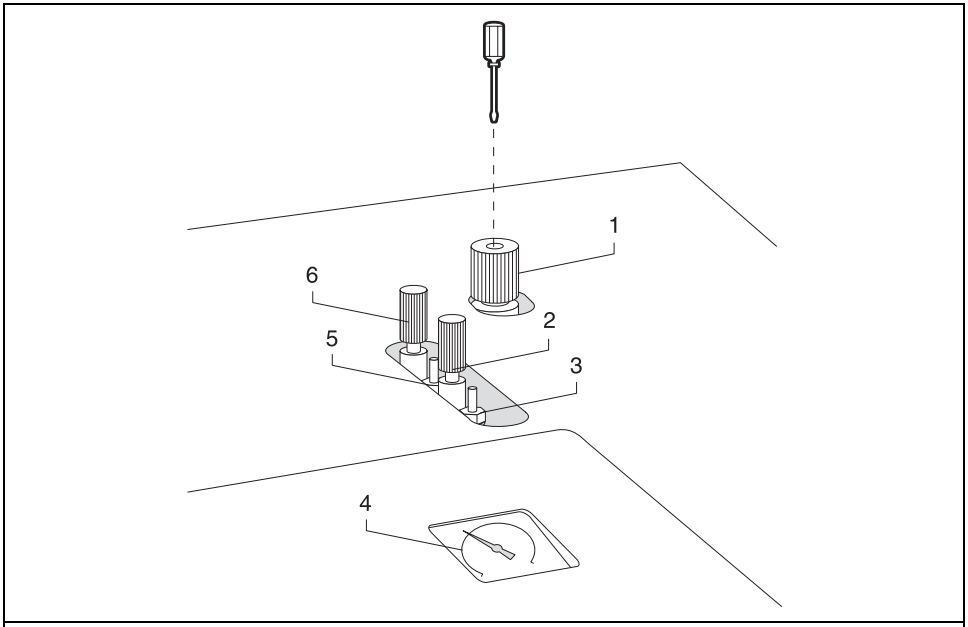

1. On/Off Knob	4. Carrier Gas Pressure Gauge
2. Split Flow Regulation Knob	5. Septum Purge Vent
3. Split Flow Vent	6. Septum Purge Knob

Figure 5-4. Non-DPFC Gases Regulation

Non-DPFC Gas Pressure Regulation

1. With non-DPFC carrier gas control, you increase or decrease pressure by turning the supply regulation screw with a screwdriver.

2. Check the pressure on the relevant pressure gauge.

3. Use the screwdriver to adjust the pressure until it is correct.

Split Gas Flow Regulation

To regulate the split gas flow for S/SL and PTV injectors operate as follows.

1. Attach a bubble flowmeter to the split flow vent (see Figure 5-4).

2. Adjust the pressure using the regulation knob.

Septum Purge Flow Regulation

To regulate the septum purge flow for S/SL, PTV, and PPKD injectors operate as follows.

1. Attach a bubble flowmeter to the septum purge vent (see Figure 5-4).

2. Adjust the pressure using the regulation knob.

To turn the split line and/or septum purge line on/off, enter valve menu by pressing **VALVES**. Scroll to the relevant valve and set the valve on or off. Refer to Chapter 28.

Gas Flow Regulation for Packed Column

1. With non-DPFC carrier gas control for packed column, you increase or decrease pressure inlet by turning the supply regulation screw with a screwdriver.

2. Adjust the flow by turning the flow regulation knob.

3. Check the pressure on the relevant pressure gauge.

4. Use the screwdriver to adjust the pressure until it is correct.

Measuring the Gas Flow

In GCs equipped with non-DPFC, you measure the septum purge and split flows out of the appropriate vent on the non-DPFC module.

In GC's equipped with non-DGFC, you must measure detector gas flows at the detector base body.

You measure the gas flow with a bubble flowmeter or an electronic flowmeter. A built-in flow calculator helps you measure the flow when you use a bubble flow meter.

Refer to the following operating sequences.

OPERATING SEQUENCE

Measuring the Non-DPFC Septum Purge/Split Flow

Materials required:

- graduated bubble flowmeter (the bulb must be half-filled with a soap solution), as shown in Figure 5-5

WARNING! Do not measure hydrogen together with air or oxygen. This can create an explosive mixture. Always measure the gases separately.

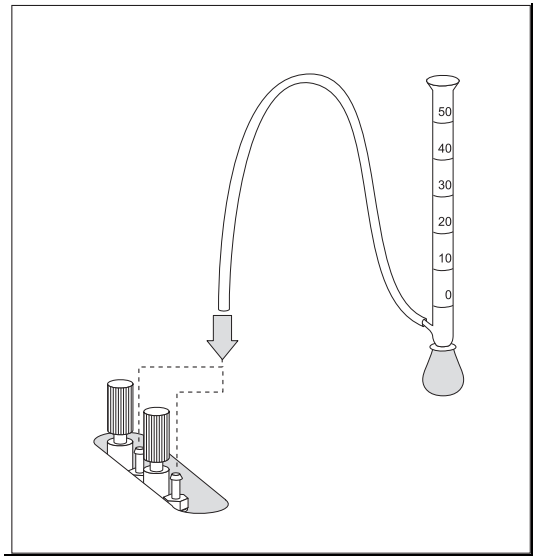

Figure 5-5. Bubble Flowmeter/Non-DPFC Connection

1. Attach the inlet line of the flowmeter to the septum purge vent or split flow vent on the non-DPFC module.

2. While holding the bubble flowmeter vertically, squeeze and release the bulb to produce a meniscus in the bubble meter.

3. Press **TIME** to enter the **TIME** menu.

```
17:02:00          7 Jan 98
Last runtime         15.06
Next runtime         25.00
Measured vol. (mL)     100
Flow = 100           T=1:00
```

4. Scroll to `Measured vol.` and set the volume that you wish to measure.

5. Scroll to the stopwatch line (`Flow = 000  T = 0:00`).

6. When the meniscus passes the flowmeter start line, marked 0, press **ENTER** to start the stopwatch.

7. When the meniscus passes the flowmeter line corresponding to the volume set in `Measured vol`, press **ENTER** to stop the stopwatch.
   The flow rate in mL/min is automatically calculated and the value is displayed.

8. Press **CLEAR** to reset the stopwatch. Repeat the measurement, if necessary.

OPERATING SEQUENCE

Measuring the Detector Gas Flows with a Bubble Meter

Materials required:

- graduated bubble flowmeter (the bulb must be half-filled with a soap solution), as shown in Figure 5-6
- detector/flowmeter adapter tube

WARNING! Do not measure hydrogen together with air or oxygen. This can create an explosive mixture. Always measure the gases separately.

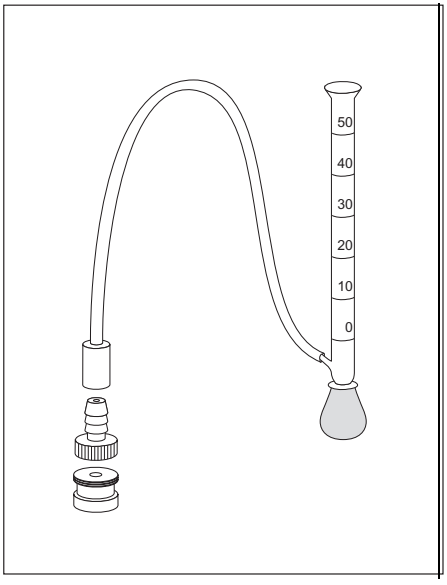

Figure 5-6. Bubble Flowmeter/Detector Connection

1. Attach the inlet line of the flowmeter to the exit of the detector base body using the adapter.
2. While holding the bubble flowmeter vertically, squeeze and release the bulb to produce a meniscus in the bubble meter.

3. Press **TIME** to enter the **TIME** menu.

```
17:02:00          7 Jan 98
Last runtime         15.06
Next runtime         25.00
Measured vol. (mL)     100
Flow = 100           T=1:00
```

4. Scroll to `Measured vol.` and set the volume that you wish to measure.

5. Scroll to the stopwatch line (`Flow = 000  T = 0:00`).

6. When the meniscus passes the flowmeter start line, marked 0, press **ENTER** to start the stopwatch.

7. When the meniscus passes the flowmeter line corresponding to the volume set in `Measured vol`, press **ENTER** to stop the stopwatch. The flow rate in mL/min is automatically calculated and the value is displayed.

8. Press **CLEAR** to reset the stopwatch. Repeat the measurement, if necessary.

SECTION III

Injectors

This section contains information about the injection systems available for the TRACE GC.

Chapter 6, *Split/Splitless Injector (S/SL)*, describes the split/splitless injector and contains operating procedures for the different split/splitless operating modes.

Chapter 7, *On-Column Injector (OCI)*, describes the on-column injector, on-column injection techniques, and operating procedures.

Chapter 8, *High Oven Temperature Cold On-Column Injector (HOT OC)*, describes the HOT on-column injector for injections at high oven temperatures, HOT on-column injection techniques, and operating procedures.

Chapter 9, *Large Volume On-Column Injector (LVOCI)*, describes the on-column injector used for large volume injections with an autosampler.

Chapter 10, *Packed Column Injector (PKD)*, describes the packed column injector and explains the packed column operating procedures.

Chapter 11, *Purged Packed Column Injector (PPKD)*, describes packed column injectors with a septum purge. Included in this chapter are injection techniques and operating procedure descriptions.

Chapter 12, *Programmable Temperature Vaporizing Injector (PTV)*, describes the Programmable Temperature Vaporizing injector and

contains operating procedures for using the injector in different operating modes.

Chapter 13, *Gas Sampling Valves (GSV)*, describes the gas sampling valves available with the TRACE GC and contains operating sequences for manual and automatic sampling.

6

Split/Splitless Injector (S/SL)

This chapter describes the Split/Splitless (S/SL) injector and contains operating sequences for the different split/splitless operating modes.

Chapter at a Glance...

Operating Sequences

S/SL Overview

The S/SL injector, shown in Figure 6-1, is optimized for either *split* or *splitless* applications to ensure effective sample transfer into the column, minimizing heavy component discrimination.

For both split and splitless applications, the sample is injected through a septum into a glass liner in the vaporization chamber.

The technique used, either split or splitless, determines the choice of the glass liner and the length of the syringe needle. You can control the injector temperature from ambient to 400 °C, although the actual injector temperature you use depends on the solvent choice and thermal stability of the samples.

In GCs with Digital Pressure Flow Control (DPFC), an electronic device controls the split flow, while the septum purge flow is kept constant by a calibrated flow regulator.

The S/SL injector is also equipped with electronically actuated On/Off valves for split and septum purge lines.

Volatile components given off by the hot septum can produce ghost peaks in a chromatogram. The septum purge system can continually purge the septum with a flow of gas. This prevents the volatile components given off by the septum from entering the column. Figure 6-2 shows the septum purge system. Figure 6-3 shows the S/SL injector components.

DoublePro

A dedicated GC can be equipped with a dual S/SL injector, known as the DoublePro Configuration.This will allow the AS 2000 Autosampler for Liquids to perform automatic injections into both injectors.

NOTE

The dual S/SL operating parameters will be set respectively in the **`LEFT INLET (S/SL)`** menu for the S/SL injector marked L, and in the **`RIGHT INLET (S/SL)`** menu for the S/SL injector marked R. To set operating parameters refer to *S/SL Injector Menus* on page 105.

To set AS 2000 Autosampler to operate in DoublePro configuration refer to **`AUTOSAMPLER`** menu in Chapter 24.
For further details about DoublePro configuration, refer to the AS 2000 Autosampler for Liquids Operating Manual.

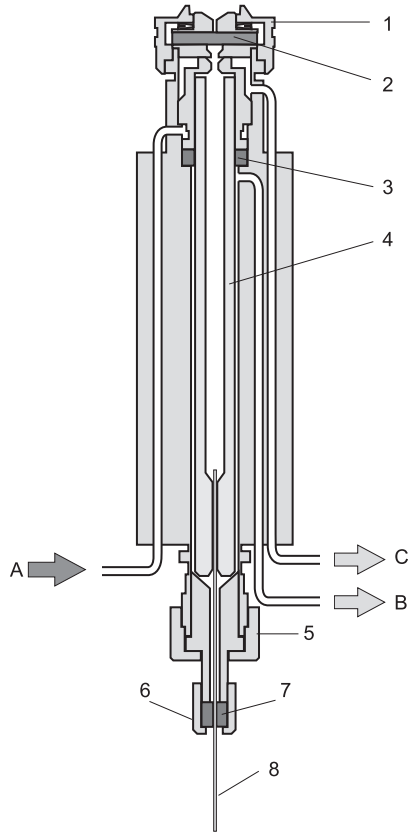

1. Septum Cap	7. Graphite Column Ferrule
2. Septum	8. Capillary Column
3. Graphite Liner Seal	A. Carrier Gas Inlet
4. Glass Liner	B. Split Line
5. Fixing Nut	C. Septum Purge Line
6. M4 Retaining Nut	

Figure 6-1. Split/Splitless Injector

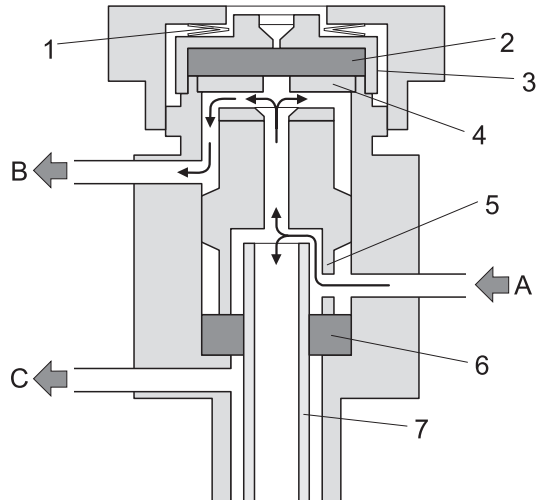

1. Spring	6. Graphite Liner Seal
2. Septum	7. Glass Liner
3. Septum Holder	A. Carrier Gas Inlet
4. Septum Support	B. Septum Purge Line
5. Liner Cap	C. Split Line

Figure 6-2. Septum Purge System

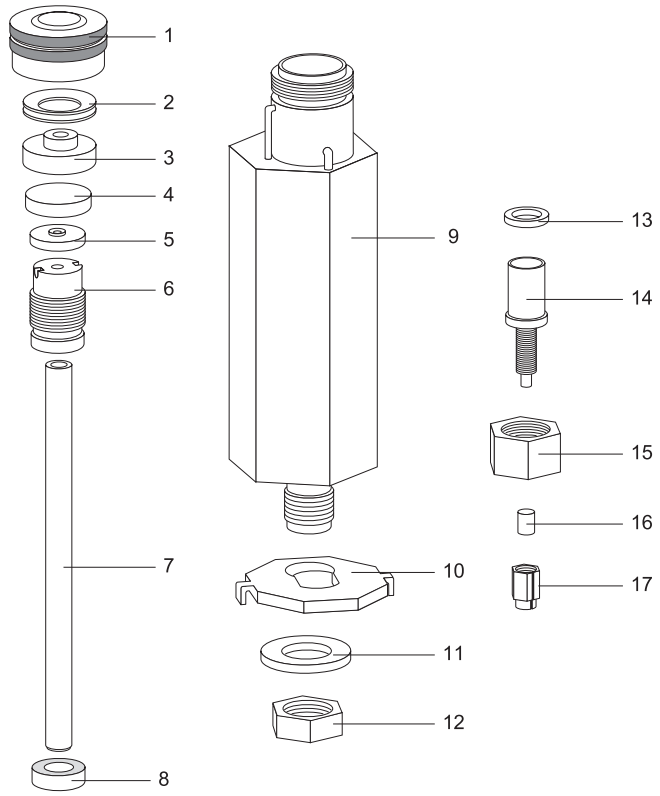

1. Septum Cap	10. Securing Bracket
2. Spring	11. Metal Ring
3. Septum Holder	12. Fixing Nut
4. Septum	13. Silver Seal
5. Septum Support	14. Terminal Fitting
6. Liner Cap	15. Fixing Nut
7. Liner	16. Graphite Column Ferrule
8. Graphite Liner Seal	17. M4 Retaining Nut
9. Injector Body	

Figure 6-3. Split/Splitless Injector Components

Septum

Standard Septum

You should always use good quality septa, such as the BTO septa supplied with the TRACE GC. Such septa resist deformation, have longer life expectancy, and have a low bleed level, even at high temperatures.

Microseal™ Valve

S/SL injector is compatible to use Merlin Microseal™ High Pressure Valve instead of the standard septa.

NOTE To replace the standard septum with the Microseal™ Valve, the relevant installation kit is required.

High pressure capability allows operation from 15 to 700 kPa (2-100 psi). Longer life reduces the changes of septum leaks occurring during extended automated runs. Microseal™ valve requires a 0.63 mm diameter (0.025-inch) blunt tip syringe.

Liners

You may install different types of glass liners depending on the injection mode used. Table 6-1 shows the liner options.

Table 6-1. Liner Sizes and Applications

ID mm	OD mm	Application
5	8	split injection
3	8	split injection
3	8	splitless injection
5	8	splitless injection
5	8	direct injection into a wide-bore column
5	8	split injection at high flow rates or for the most polar solvents

The glass liner used for direct splitless injection into a wide-bore column is tapered at the bottom. It is used with 0.53 mm ID columns. Figure 6-4 shows the tapered glass liner.

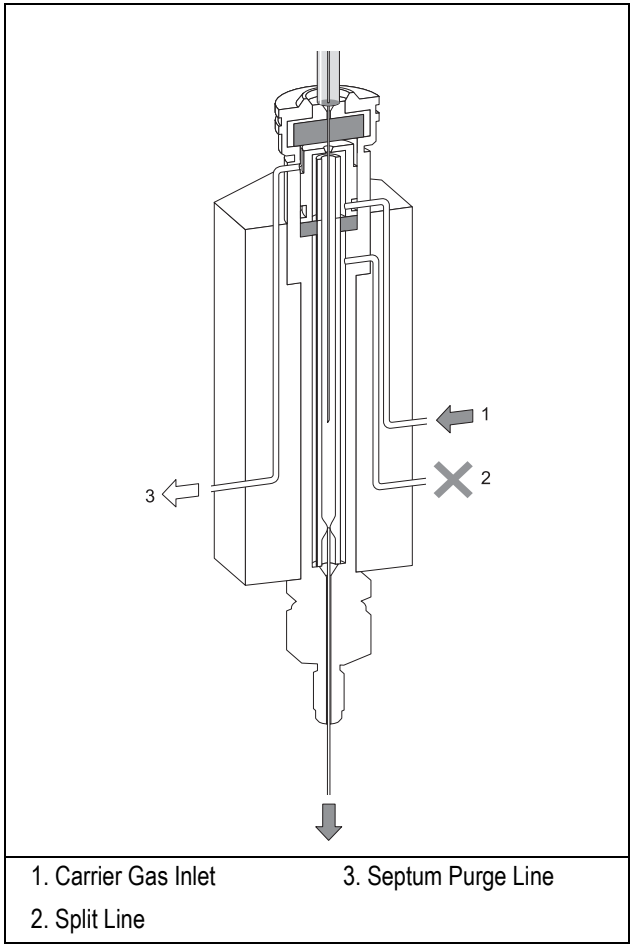

Figure 6-4. S/SL Wide-Bore Injection with a Tapered Liner

A laminar cup liner is used for split injections at high split flow rates or for the more polar solvents. This glass liner has a mixing chamber with an extended flow path that allows complete sample vaporization before the sample reaches the split point.

Packed Columns

With a special conversion kit, you can install packed columns in the S/SL injector, as shown in Figure 6-5.

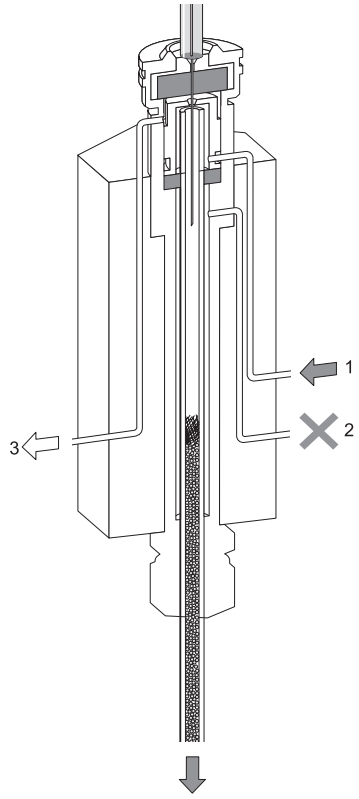

1. Carrier Gas Inlet
2. Split Line
3. Septum Purge Line

Figure 6-5. S/SL with a Packed Column

S/SL Injection Techniques

You use different sample injection techniques for split and splitless applications.

Split Injection Technique

In split injection, only a part of the sample transfers into the column. The rest discharges through the split line.

The ratio of the split flow to the column flow (the *split ratio*) determines the amount of sample that enters the chromatographic column. Figure 6-6 illustrates the gas flows for the split injection technique.

You inject the sample into a glass liner inside the heated vaporization chamber. In the chamber, the sample undergoes rapid vaporization. The relatively high gas flow through the injector carries the vaporized sample rapidly down toward the head of the column.

At the column head, the sample splits in the split ratio. A portion of the sample goes into the column, while the remainder is carried out the split line. You set the column flow and the split flow in the **`LEFT`** or **`RIGHT INLET`** menu.

Narrow bore columns, which have inherently low column flows, can produce relatively high split ratios.

NOTE

Hot Empty Needle Injection Technique
Using conventional syringes in hot injectors may cause discrimination of higher boiling point components. This is due to partial sample vaporization within the hot syringe needle. We recommend you use a *hot empty needle* injection technique. This technique consists of drawing the sample volume into the syringe barrel followed by a small air gap, which ensures the syringe needle is empty. You insert the empty needle into the injector, wait a few seconds, inject the sample rapidly, and immediately remove the syringe.

Split injection is suitable for high-concentration sample analysis, headspace analysis, and isothermal analysis.

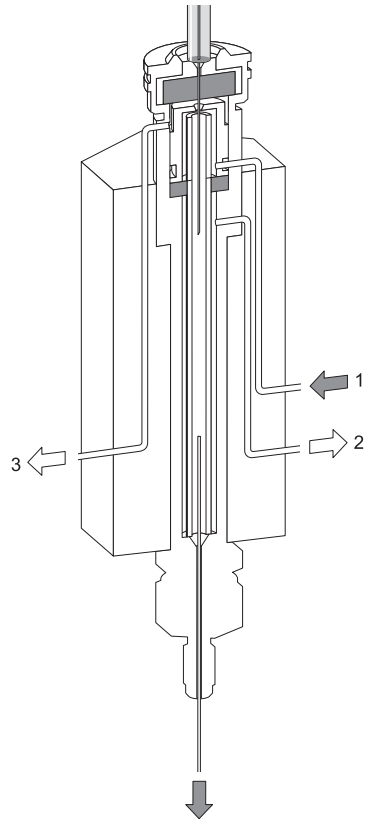

1. Carrier Gas Inlet
2. Split Line
3. Septum Purge Line

Figure 6-6. Split Injection Technique

The major advantages of split injection are simplicity and the ability to introduce samples over a wide range of concentrations. Peak shapes in the chromatogram are generally very sharp due to the rapid sample introduction into the column.

Splitless Injection Technique

Splitless injection is suitable for the analysis of compounds present in very low concentrations and for relatively dirty matrices.

The splitless technique allows the entire sample to enter the column without splitting. This offers better sensitivity than the split technique. Compared to on-column injection, which is also suitable for capillary column analysis of compounds at low concentrations, splitless injection has the major advantage that it can accommodate significantly dirty samples.

With splitless injection, the split line is closed during sample injection and transfer to the column. Once the transfer is over, the split line reopens to flush the vaporization chamber of any remaining sample vapors. Figure 6-7 shows the split/spliless injector used for splitless injection.

During splitless injection, when the split valves are closed, the flow of gas through the injector is relatively low. It is equal to the column flow—only a few mL/min.

The vapor cloud generated by the vaporization of the liquid sample expands upward from the point of vaporization and can fill the liner.
The injector can accept and quantitatively transfer to the column sample volumes of up to 5 µL.
With injection volumes higher than 4 µL, the recovery of the sample injected can be improved by closing the septum purge as well as the split valve during the splitless period.
You can program this in the **`INLET`** menu when you select the `Splitless` mode.
Condensation and subsequent loss of higher molecular mass compounds in the top region of the injector liner is prevented by effective heating over the whole length of the injector.

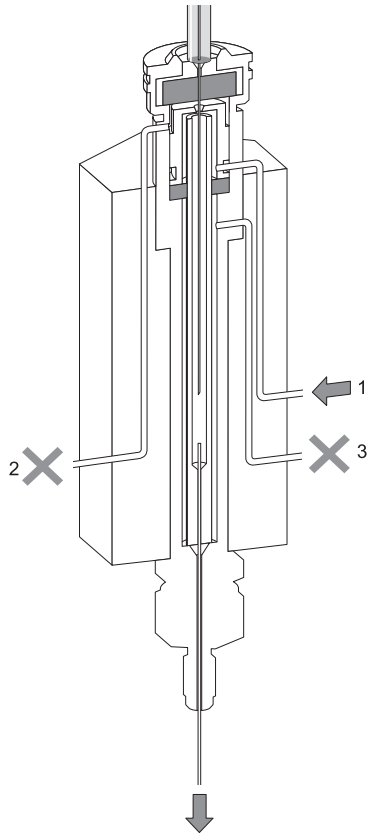

1. Carrier Gas Inlet
2. Septum Purge Line
3. Split Line

Figure 6-7. Splitless Injection Technique

The transfer of the vaporized sample from the injector to the column takes place very slowly due to the relatively low column flows involved. With typical carrier gas flow rates of 1–4 mL/min, the transfer can take between 30 and 90 seconds, depending on a variety of circumstances.

This transfer time is the *splitless time*. You can set the splitless time in the **`INLET`** menu when you select `Splitless` mode. For narrower diameter columns (< 0.22 mm) with inherently lower flows (< 1.0 mL/min), the transfer might never be

completely achieved due to back diffusion of sample vapors in the injector at a higher rate than transfer into the column.
You can counter this by using the *splitless surge* pressure mode. In this mode, the pressure in the injector temporarily increases during the splitless period to increase the flow into the column. You set the surge pressure, which activates during the **Prep Run** stage.

At the end of the splitless period, the split valve reopens and the split flow flushes the injector of any remaining sample vapors. In splitless injection, the absolute split flow is not important. It need only be sufficient to purge the injector. Normally 40–50 mL/min is adequate.

Refocusing the Sample

The sample vapors enter the column over an extended period of time and produce very broad starting bands. To maintain column efficiency, some form of refocusing must take place in the column inlet before chromatography begins. To achieve this, keep the oven temperature to a sufficiently low value during the transfer of the sample to trap it on the column head by condensation or solvent effect.

This technique's efficiency is greatly enhanced by correctly choosing conditions for column character, carrier gas flow rates, splitless time, column temperature, and injector liner internal diameter. All of these conditions can affect the transfer efficiency and refocusing.

- **Solvent Effect**
  To refocuse the compounds that elute at low temperature, the so-called *solvent effect* is used. It consists of the volatile compounds trapping on the solvent recondensed in column. It is obtained cooling the column to 20–25 °C below the solvent boiling point, combined with injection volumes of at least 1 µL. Isothermal analysis or temperature programming can then continue. You must carefully control the analysis conditions and use a 7 cm syringe needle applying the *Hot Empty Needle Injection Technique*.
- **Temperature Effect**
  You can refocus later eluting compounds without solvent effects by cooling the oven sufficiently during the transfer. The trapping temperature effect traps and refocuses the sample compounds.

Flooding

Splitless injections may occasionally exhibit an effect known as *flooding*, which can result in peak distortion due to the solvent condensation. You can overcome flooding effects by using a *retention gap*. Refer to *Retention Gaps/Pre-Columns* in Chapter 7, *On-Column Injector (OCI)*, for more information.

NOTE

Hot Empty Needle Injection Technique

Using conventional syringes in hot injectors may cause discrimination of higher boiling point components. This is due to partial sample vaporization within the hot syringe needle. We recommend you use a *hot empty needle* injection technique. This technique consists of drawing the sample volume into the syringe barrel followed by a small air gap, which ensures the syringe needle is empty. You insert the empty needle into the injector, wait a few seconds, inject the sample rapidly, and immediately remove the syringe.

S/SL Injector Menus

The **INLET (S/SL)** menu includes the operating parameters for the split/splitless injector. The parameters you can edit depend on the operating mode chosen: split, splitless, or splitless with surge.

Press **LEFT INLET** or **RIGHT INLET** to display the **LEFT** or **RIGHT INLET (S/SL)** menu.

```
      LEFT INLET (S/SL)

 Temp              250  250
 Pressure       10.6   10.6
 Mode:               split<
```

The `Mode:` menu item displays the current operating mode.

Press **MODE/TYPE** to open the **INLET MODE** submenu.

```
        XX INLET MODE

* Split                 <
  Splitless
  Splitless w/surge[1]
```

1. This line is displayed only if your GC has DPFC control.

Scroll to the mode you want to use and press **ENTER** to confirm the selection. An asterisk appears on the left of the operating mode selected.

Tables 6-2 through 6-4 explain the ranges and functions of the parameters in the **LEFT** and **RIGHT INLET (S/SL)** menus for each of the four operating modes.

NOTE The injector and carrier gas menus are related. If you set a pressure in the carrier gas menu, that same pressure setting is reflected in the injector menu and vice-versa.

The items in the inlet menu vary depending on the operating mode you select in the **LEFT** or **RIGHT INLET MODE** menu. Tables 6-2 through 6-4 show the split/splitless inlet menu for the operating modes.

Table 6-2. Inlet (S/SL) Menu in Split Mode

Menu	Range	Comments
`RIGHT INLET (S/SL)`		This line is the menu title bar.
`Temp`	On/Off, 0–400 °C	This line shows the base injector temperature. Press **ON** to turn on the heater and to display the actual and setpoint values. Press **OFF** to turn off the heater and display the actual value.
`Pressure`[1]	On/Off, 2–250 kPa or 7–700 kPa[2]	This line shows the pressure. Press **ON** to display the actual and setpoint values. Press **OFF** or **0** to turn off all inlet flows and display the actual value.
`Mode: Split`		This line displays the inlet operating mode selected.
`Total flow`[1]	Not editable	This line shows the total gas flow consumption, which is the sum of the column flow, split flow (or gas saver flow), and septum purge flow.
`Split flow`[1]	On/Off, 0, 10–500 mL/min	This line shows the split flow. Press **ON** to turn on the split flow and display the actual and setpoint values. Press **OFF** or **0** to close the split valve and to turn off the split flow.
`Split ratio`[1]	1–5000	This line displays the actual value of the split ratio. This value is the ratio between the split flow and the column flow.

1. This line is displayed only if your GC has DPFC control.
2. 0.3–36 psi, 0.02–2.5 bar; 1.00–100 psi, 0.07–7.00 bar.

Table 6-3. Inlet (S/SL) Menu in Splitless Mode

Menu	Range	Comments
`RIGHT INLET (S/SL)`		This line is the menu title bar.
`Temp`	On/Off, 0–400 °C	This line shows the base injector temperature. Press **ON** to turn on the heater and to display the actual and setpoint values. Press **OFF** to turn off the heater and to display the actual value.
`Pressure`[2]	On/Off, 2–250 kPa or 7–700 kPa[1]	This line shows the pressure. Press **ON** to display the actual and setpoint values. Press **OFF** or **0** to display the actual value and to turn off inlet pressure, thereby turning off the flow.
`Mode: Splitless`		This line displays the operating mode selected. Press **ENTER** or **MODE/TYPE** to change the operating mode.
`Total flow`[2]	Not editable	This line shows the total gas flow consumption, which is the sum of the column flow, split flow (or gas saver flow), and septum purge flow.
`Split flow`[2]	On/Off, 0, 10–500 mL/min	This line shows the split flow. Press **ON** to turn on the split flow and to display the actual and setpoint values. Press **OFF** or **0** to close the split valve and to turn off the split flow.
`Splitless time`[2]	0–999.99 min	This line shows the splitless time, which is the duration of split valve closure.
`Const sept purge?`	Yes/No	Press **YES** to activate a constant septum purge to continuously flush the septum with a purge flow of 5 mL/min when using helium or nitrogen as a carrier gas or 10 mL/min when using hydrogen as a carrier gas.
`Stop purge for:`	0–999.99 min, ∞	This line appears only when `Constant septum purge` is set to `No`.

1. 0.3–36 psi, 0.02–2.5 bar; 1.00–100 psi, 0.07–7.00 bar.
2. This line is displayed only if your GC has DPFC control.

Table 6-4. Inlet (S/SL) Menu in Surge Splitless Mode[1]

Menu	Range	Comments
`RIGHT INLET (S/SL)`		This line is the menu title bar.
`Temp`	On/Off, 0–400 °C	This line shows the base injector temperature. Press **ON** to turn on the heater and display the actual and setpoint values. Press **OFF** to turn off the heater and to display the actual value.
`Pressure`	On/Off, 2–250 kPa, 7–700 kPa[2]	This line shows the pressure. Press **ON** to display the actual and setpoint values. Press **OFF** or **0** to display the actual value and to turn off inlet pressure, thereby turning off the flow.
`Mode: SRG Splitless`		This line displays the operating mode selected. Press **ENTER** or **MODE/TYPE** to change the operating mode.
`Total flow`	Not editable	This line shows the total gas flow consumption, which is the sum of the column flow, split flow (or gas saver flow), and septum purge flow.
`Split flow`	On/Off, 0, 10–500 mL/min	This line shows the split flow. Press **ON** to turn on the split flow and display the actual and setpoint values. Press **OFF** or **0** to close the split valve and to turn off the split flow.
`Splitless time`	0–999.99 min	This line shows the splitless time, which is the duration of split valve closure.
`Surge pressure`	2–250 kPa or 7–700 kPa[2]	This line indicates the surge pressure, which is activated at **Prep Run**.
`Surge duration`	0–999.99 min	This line indicates the duration of the surge pressure after run start.
`Const sept purge?`	Yes/No	Press **YES** to activate a constant septum purge to continuously flush the septum with a purge flow of 5 mL/min when using helium or nitrogen as a carrier gas or 10 mL/min when using hydrogen as a carrier gas.
`Stop purge for:`	0–999.99 min, ∞	This line appears only when `Constant septum purge` is set to `No`.

1. This menu will only be displayed if your GC is configured for DPFC.
2. 0.3–36 psi, 0.02–2.5 bar; 1.00–100 psi, 0.07–7.00 bar.

OPERATING SEQUENCE

Installing a Liner and a Septum

Materials required**:**

- liner
- septum
- tweezers
- graphite seal
- liner cap wrench (included with the GC)

NOTE **The injector fittings may be hot.**
This sequence must be performed with the injector at working temperature.

1. Choose the correct liner for your application (see Table 6-1). Slide a graphite seal onto the liner from the bottom (the bevelled end) and push it to approximately 8–10 mm from top (the flat end).

CAUTION **Be careful not to break the graphite or to allow graphite to enter the liner.**

2. Hold the top of the liner with tweezers. Lower it, bevelled end first, into the injector. The liner should rest on the terminal fitting at the bottom of the injector.

3. Hold the top of the liner with tweezers. Lower it, bevelled end first, into the injector. The liner should rest on the terminal fitting at the bottom of the injector.

4. Insert the liner cap and secure it with the liner cap wrench. The liner cap must be screwed down tight enough to ensure a good seal between the liner and the injector body.

5. Place the septum support in the injector. The septum support must lie flush with the top of the injector. If not, the liner cap may not be tight enough.

6. Use tweezers to pick up the septum. Place the septum into the septum holder, then place the holder on top of the complete injector assembly.

CAUTION **To avoid contamination, do not touch the septum with your hands.**

7. Gently screw the septum cap onto the injector assembly until finger-tight to hold the septum in place.

WARNING! **If the injector is hot, use the liner cap wrench to turn the septum cap.**
Do not overtighten the septum cap. The septum will deform and may be difficult to penetrate with the syringe needle.

OPERATING SEQUENCE

Programming the Split Mode

In split injection, only a portion of the sample transfers to the column. Most of it discharges through the splitting line. The ratio between the split flow and the column flow defines the amount of sample that enters the chromatographic system. The split and column flows must be set to obtain the correct split ratio necessary for the analysis.

Before you begin programming, do the following:

- Verify that a column is correctly installed, the correct liner is in the injector, and the system is free of leaks.
- Program the carrier gas flow as described in Chapter 4, *Digital Gas Control*, or Chapter 5, *Manual Gas Control* according to the pneumatic modules installed.

1. Press **LEFT INLET** or **RIGHT INLET** to open the `INLET (S/SL)` menu.

2. Scroll to `Mode:` and press **MODE/TYPE**.

3. Scroll to `Split` and press **ENTER**.

4. Scroll to `Temp` and press **ON**. Set the appropriate value.

WARNING! In the case of DoublePro configuration, the temperature for both injectors must be set at the same value otherwise the GC could not reach the Ready stage.

5. If your GC contains DPFC modules, you can specify the split flow or the split ratio. To se the split flow, scroll to `Split flow` and enter the value in mL/min. The split ratio will be calculated for you.

   To set the split ratio, scroll to `Split ratio` and enter that value. The split flow will be calculated for you.

OPERATING SEQUENCE

Programming the Splitless Mode

In splitless analyses, the splitting line is closed during the sample transfer onto the column. The time during which the splitting valve remains closed is called the *splitless time*. When the sample transfer ends, the split line reopens to purge the residual sample components, essentially solvent, out of the vaporization chamber. You can activate a constant septum purge, if necessary, to continuously flush the septum with a purge flow. The septum purge prevents septum bleed components from entering the column.

Before you begin programming, do the following:

- Verify that a column is correctly installed, the correct liner is in the injector, and the system is free of leaks.
- Program the carrier gas flow as described in Chapter 4, *Digital Gas Control*, or Chapter 5, *Manual Gas Control* according to the pneumatic modules installed.

1. Press **LEFT INLET** or **RIGHT INLET** to open the **`INLET (S/SL)`** menu.

2. Scroll to `Mode:` and press **MODE/TYPE.**

3. Scroll to `Splitless` and press **ENTER**.

4. Scroll to `Temp` and press **ON**. Enter the appropriate value.

WARNING! In the case of DoublePro configuration, the temperature for both injectors must be set at the same value otherwise the GC could not reach the Ready stage.

5. If your GC contains DPFC modules, scroll to `Split flow` and enter the desired value in mL/min.

6. If your GC contains DPFC modules, scroll to `Splitless time` and enter the time the inlet valve should be closed.

7. If constant septum purge is required, scroll to `Const sept purge?` and press **YES** to activate a constant septum purge. If constant septum purge is not required, press **NO** and scroll to `Stop purge for` to enter the time the purge flow should be interrupted.

OPERATING SEQUENCE

Programming the Surge Splitless Mode

NOTE This feature is available only for GCs with DPFC carrier gas regulation.

In *surge splitless* mode, a carrier gas pressure surge activates during the injection phase for a preset time. This surge accelerates the transfer process of the substances from the injector to the column. The pressure pulse starts in the **Prep Run** phase and ends at the end of the surge duration you program.

Before you begin programming, do the following:

- Verify that a column is correctly installed, the correct liner is in the injector, and the system is free of leaks.
- Program the carrier gas flow as described in Chapter 4, *Digital Gas Control*, or Chapter 5, *Manual Gas Control* according to the pneumatic modules installed.

1. Press **LEFT INLET** or **RIGHT INLET** to open the **`INLET (S/SL)`** menu.

2. Scroll to `Mode:` and press **MODE/TYPE.**
3. Scroll to `Splitless w/surge` and press **ENTER**.
4. Scroll to `Temp` and press **ON**. Enter the appropriate value.

WARNING! In the case of DoublePro configuration, the temperature for both injectors must be set at the same value otherwise the GC could not reach the Ready stage.

5. Scroll to `Split flow` and enter the desired value in mL/min.
6. Scroll to `Splitless time` and enter the time the split valve should be closed.
7. Scroll to `Surge pressure` and enter the value of the pressure surge.
8. Scroll to `Surge duration` and enter the duration of the pressure surge.
9. If constant septum purge is required, scroll to `Const sept purge?` and press **YES** to activate a constant septum purge. If constant septum purge is not required, press **NO** and scroll to `Stop purge for` to enter the time the purge flow should be interrupted.

OPERATING SEQUENCE

Performing a S/SL Injection

Use the following sequence to inject a sample into a split/splitless injector.

Before injection, do the following:

- Verify that a column is correctly installed, the correct liner is in the injector, and the system is free of leaks.
- Check the oven temperature and detector temperature.
- Program the carrier gas flow as described in Chapter 4, *Digital Gas Control*, or Chapter 5, *Manual Gas Control* according to the pneumatic modules installed.
- Verify that you have the proper syringe for the technique you are using:
  - — 51 mm needle for split injection
  - — 70–75 mm needle for splitless injection

WARNING! Hydrogen is a potentially dangerous gas. Refer to *Using Hydrogen* on page xl for safety information.

Manual Injection

1. Press **PREP RUN**. Depending on the mode you have programmed, the TRACE GC will perform the following operations:
   - When the gas saver function is programmed, **PREP RUN** ends the gas saver mode and resets the split flow to the flow used during injection.
   - In splitless mode, **PREP RUN** closes the split valve and will close the septum purge valve as programmed.
   - In surge splitless mode, **PREP RUN** initiates the surge pressure.
2. When the **Ready to Inject** LED is lit, insert the syringe into the injector, wait for approximately 2 seconds, inject the sample rapidly, and rapidly remove the syringe from the injector. (This is the *Hot Empty Needle* technique.)
3. Press **START**.

The GC will complete the analysis as programmed.

Injection Using an Autosampler

Before you begin autosampler injection, ensure that you have programmed the autosampler method in the **AUTOSAMPLER** menu and the autosampler sequence in the **SEQUENCE** menu.
For instructions refer to

- *AS 2000 Autosampler Menu* in Chapter 24 and *Sequence Programming* in Chapter 29.
- *HS 2000 Autosampler Menu* in Chapter 25 and *Sequence Programming* in Chapter 30.

1. Press **PREP RUN**. Depending on the mode you have programmed, the TRACE GC will perform the following operations:
   - When the gas saver function is programmed, **PREP RUN** ends the gas saver mode and resets the split flow to the analytical flow.
   - In splitless mode, **PREP RUN** closes the split valve and will close the septum purge valve as programmed.
   - In surge splitless mode, **PREP RUN** initiates the surge pressure.
2. Press **SEQ CONTROL**.
3. Scroll to `Start Sequence` and press **ENTER** or **START**.

The autosampler will inject the samples according to the programmed method and sequence.

7

On-Column Injector (OCI)

This chapter describes the On-Column Injector (OCI), on-column injection techniques, and operating sequences.

Chapter at a Glance...

Operating Sequencess

OCI Overview

With on-column injectors, you use a syringe to inject a liquid sample directly into the capillary column.

The upper part of the injector has a needle guide and a rotary valve. The lower part attaches to the top of the column oven. The standard OCI does not have a septum.

The on-column injector is shown in Figure 7-1.

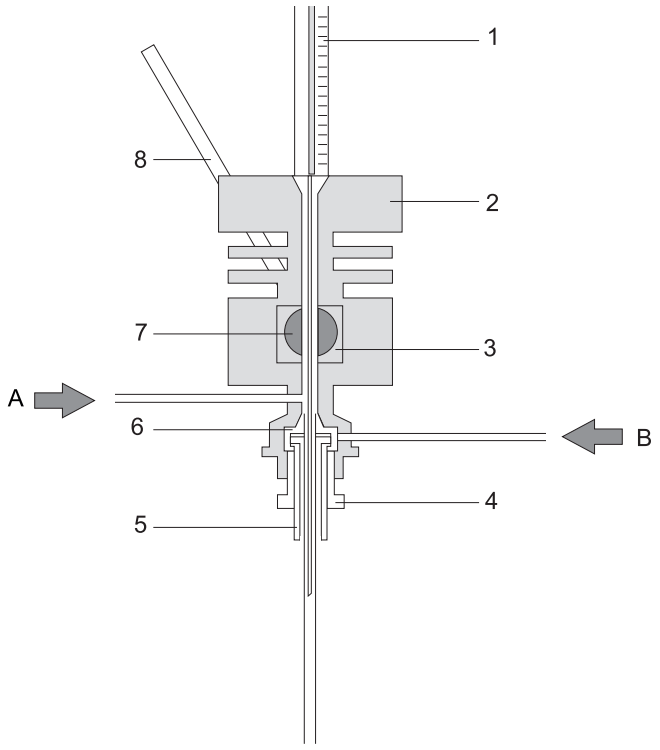

1. Syringe	6. Seal
2. Upper Block	7. Stainless Steel Rotary Valve
3. PTFE Valve Seal	8. Valve Lever
4. M8x1 Fixing Nut	A. Carrier Gas Inlet
5. Cooling Sleeve	B. Secondary Cooling Inlet

Figure 7-1. On-Column Injector

Primary Cooling System

The injection block is kept at ambient temperature by the primary cooling system, which maintains a permanent air flow across the injector body through a special cooling fan.

Secondary Cooling System

A gas stream surrounds the area around the column at the injection point. This gas is normally compressed air, but for special applications, CO_2 can be used. The *secondary cooling* flow keeps the injection zone at a temperature below the solvent boiling point, even when the oven runs at a higher temperature. Elevated oven temperature helps eliminate peak distortion in the chromatogram caused by *flooding effects*.[1]

The secondary cooling system ensures complete and effective sample transfer from the syringe to the column and improves reproducibility. Secondary cooling activates immediately before an injection and remains on after the injection until all of the injected solvent has vaporized. The *secondary cooling time*, which is the duration of secondary cooling during a run, depends on the oven temperature, the volatility of the solvent, and the amount injected, but is normally in the range of 3–10 seconds. You program the parameters for secondary cooling in the **`INLET (OCI)`** menu.

1. Journal of Chromatography, 279 (1983) 241–250.

Primary and secondary cooling systems are shown in Figure 7-2.

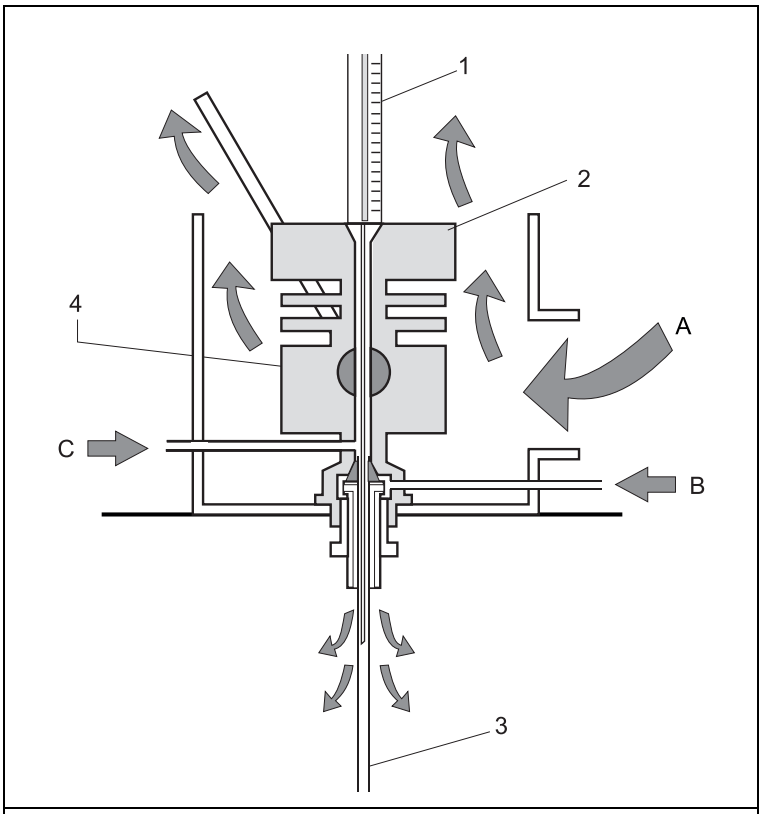

1. Syringe	A. Primary Cooling
2. Injector Upper Block	B. Secondary Cooling
3. Capillary Column	C. Carrier Gas Inlet
4. Injector Lower Block	

Figure 7-2. Primary and Secondary Cooling Systems

On-Column Options

Optional devices and special on-column injectors can be used for special applications or to help automate certain functions.

Automatic Actuator

The automatic actuator can semiautomate manual injections by automatically opening the rotary valve when the syringe needle is inserted. When the needle is removed, the automatic actuator closes the valve and starts the GC.

High Oven Temperature (HOT OC) Device

The HOT OC device allows on-column operation at high initial oven temperatures, eliminating the need to cool the oven to a lower temperature for the injection. Chapter 8, *High Oven Temperature Cold On-Column Injector (HOT OC)*, describes this device in detail.

Large Volume On-Column Injector (LVOCI)

The LVOCI is a special version of the standard on-column injector that allows large volume liquid sample analysis with an AS 2000 autosampler. Dedicated software is required for this injector. Chapter 11, *Large Volume On-Column Injector (LVOCI)*, describes the principles and hardware for this injection technique.

OCI Injection Techniques

On-column injection is the direct, cold injection of a liquid sample into the column at a point within the column oven and under oven temperature control. The oven temperature determines the actual injection temperature. The injector itself is unheated and serves only as a valve for inserting the syringe needle into the column without depressurizing the column.

The syringe needle enters the injector through a needle channel and passes through a rotary valve and a needle guide. When closed, the rotary valve maintains column pressure. When the valve is open and a syringe needle is inserted, the column pressure remains constant because the needle prevents the gas from escaping.

Cold on-column injection has a number of advantages over the more traditional hot vaporization techniques, from both a qualitative and quantitative viewpoint. Cold injection prevents losses and changes caused by thermal degradation of components in a hot injector. Direct injection without a hot injector vaporization step avoids heavy component discrimination in the syringe needle.

When a sample is injected, a plug of liquid forms in the capillary column. This plug of liquid, if uncontrolled, can cause peak distortion. A *flooding effect* occurs when the column's inlet portion floods with liquid sample, up to several meters. You can prevent this effect and maintain perfect peak shapes by carefully controlling the oven temperature during the injection. Oven temperatures of about 10 °C above the solvent boiling point hasten the vaporization of the liquid sample in the column and thus, prevent flooding effects. When using slightly elevated oven temperatures, secondary cooling must be used to control flooding.

Retention Gaps/Pre-Columns

The term *retention gap* refers to an initial part of the column or pre-column that has a much lower retention than the analytical column. A pre-column is a length of fused silica tubing, usually uncoated, connected between the injector and the analytical column. A pre-column protects the analytical column from particulate material (dirt) injected with the sample. A pre-column, when uncoated, can also function as a retention gap.

We recommend using an uncoated length of pre-column in on-column injection for a number of reasons:

- It protects the analytical column from dirt present in the sample. The effect of dirty samples is magnified in on-column injection because the sample is injected directly into the column system.
- It can function as a retention gap. Uncoated retention gaps can tolerate the presence of liquid flooding through them (the flooding effect). Using a retention gap of fused silica limits the flooded zone to a part of the column where chromatography does not take place. Solvent vaporization takes place within the uncoated retention gap so liquid sample does not reach the analytical column. This eliminates peak distortion due to flooding. Injection

can take place at oven temperatures below the solvent boiling point, if necessary.

- Wide-bore retention gaps allow fully-automated on-column injection in small diameter capillary columns using an autosampler.

NOTE Flooding can also occur during splitless injection, especially with injection volumes greater than 1 µL. The use of retention gaps helps control flooding effects in splitless injection.

For optimal cold on-column injection performance, do not start rapidly programming the oven temperature until the solvent vaporization is complete.

The sample is injected with the oven temperature below or, with secondary cooling, moderately above the solvent boiling point using a syringe with a needle made specifically for on-column injection. Refer to Table 7-1.

Table 7-1. On-Column Injection Needles

Type of Syringe	Needle Size	Application
with a metal needle	75 mm 0.23 mm OD	suitable for on-column injections into columns with at least 0.3 mm ID
with a fused silica needle	0.17 mm OD	suitable for columns with 0.2–0.25 mm ID

The standard injector upper block has a needle guide with 0.3 mm ID. Fused silica needles require a special upper block with a needle guide of 0.2 mm ID. Autosampler injections require a dedicated injector upper block.

Manual and Automatic Injections

To perform manual or automatic injections, the injector must be equipped with the appropriate upper block (injection heads).

Manual Injections

To perform a manual injection, use a syringe and manually open and close the rotary valve with the valve lever. Refer to the *Setting Up the OCI for Manual Injection* operating sequence on page 126 for instructions.

You can use the automatic actuator to open and close the rotary valve. The automatic actuator senses the presence of the syringe needle and its position. If you use an automatic actuator, the syringe adjustment described in the *Setting Up the OCI for Manual Injection* operating sequence is not necessary. Figure 7-3 shows the automatic actuator.

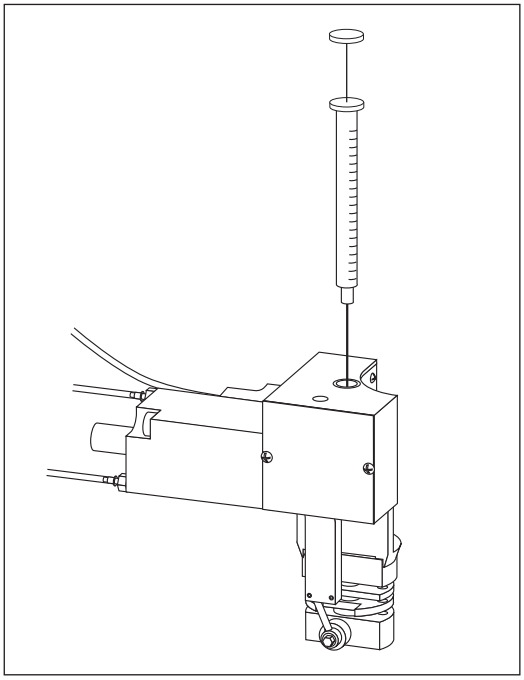

Figure 7-3. Automatic Actuator

Automatic Injections

- You can use the AS 2000 autosampler and a dedicated on-column injector head for autosamplers to perform automatic injections. A butterfly valve driven by the AS 2000 automatically opens and closes the rotary valve. The TRACE GC can control the autosampler. Refer to *AS 2000 Autosampler Menu* in Chapter 24 and *Sequence Programming* in Chapter 29. for more information about autosampler programming.

OCI Menu

The **INLET** menu contains the parameters for on-column injector operations if you have configured an on-column injector.

Press **LEFT INLET** or **RIGHT INLET** to display the **INLET (OCI)** menu, depending on the injector position.

NOTE The injector and carrier gas menus are related. If you set a pressure at the carrier gas menu, that same pressure setting is reflected in the injector menu, and vice-versa.

Table 7-2. Inlet (OCI) Menu

Menu	Range	Comments
RIGHT INLET (OCI)		This line is the menu title bar.
Pressure[1]	On/Off, 2–250 kPa or 7–700 kPa[2]	This line shows the pressure. Press **ON** to display the actual and setpoint values. Press **OFF** or **0** to display the actual value and turn off inlet pressure, thereby turning off the flow.
Sec. cool time	0–999.99 min, ∞	This line shows the secondary cooling time, which is the duration of the secondary cooling. If programmed, the valve opens in the **Prep Run** stage.

1. This line is displayed only if your GC has DPFC gas modules installed.
2. 0.3–36 psi, 0.02–2.5 bar; 1.00–100 psi, 0.07–7.00 bar.

NOTE When you press either **COLUMN EVAL** or **LEAK CHECK** while the **INLET** menu is displayed, the GC immediately performs the selected function if the instrument is in the **Standby** status.

OPERATING SEQUENCE

Setting Up the OCI for Manual Injection

For manual operation, adjust the syringe and needle position in the on-column injector using the needle guide before injecting the sample. See Figure 7-4.

The syringe needle in the injector needle guide prevents possible column depressurization when the valve is open.

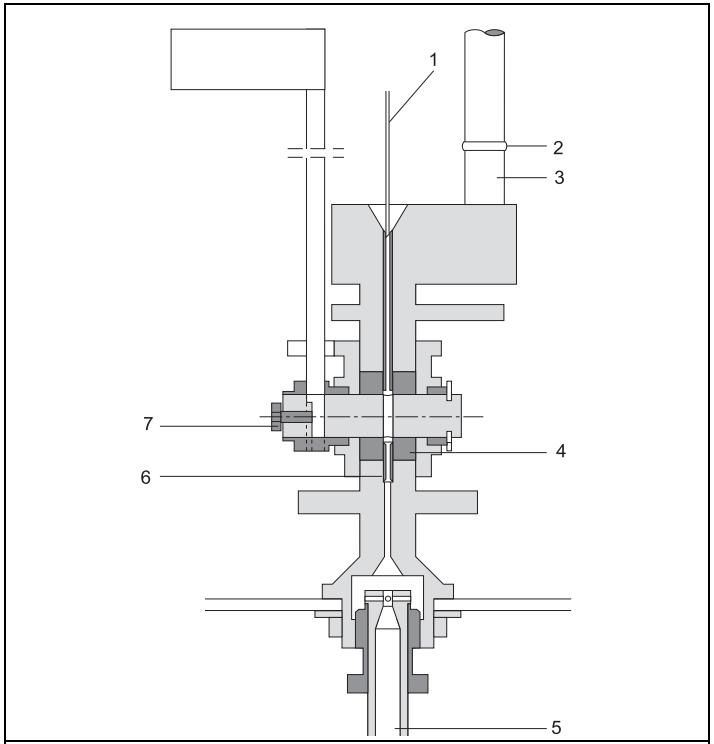

1.Syringe needle	5.Secondary Cooling Sleeve
2.Syringe reference	6.Needle Guide
3.Shaft	7.Valve Lever Fixing Screw
4 PTFE Rotary Valve Seal	

Figure 7-4. Manual Injection Setup

1. Close the injection valve and carefully insert the syringe until the needle touches the valve.
2. Withdraw the syringe a few millimeters. This is the correct position for the needle.
3. Adjust and secure the syringe reference accordingly.

CAUTION **Check the setting at regular intervals. Failure to do so may result in damage to the syringe needle and to the rotary valve itself if the valve is closed with the syringe needle still in the valve.**

OPERATING SEQUENCE

Programming the OCI

Before you begin programming, do the following:

- Verify that a column is correctly installed and the system is free of leaks.
- Program the carrier gas flow as described in Chapter 4, *Digital Gas Control*, or Chapter 5, *Manual Gas Control* according to the pneumatic modules installed.

1. Press **LEFT INLET** or **RIGHT INLET** to open the **`INLET`** menu, depending on the position of the on-column injector.
2. Scroll to `Sec. cool time` and set the duration of the secondary cooling event.

NOTE The secondary cooling time must be entered in minutes. For example, you would enter `0.10` for a secondary cooling time of 6 seconds.

OPERATING SEQUENCE

Performing an OCI Injection

Use the following sequence to inject a sample into an on-column injector.

Before injection, do the following:

- Verify that a column is correctly installed and the system is free of leaks.
- Check the oven temperature and detector temperature.
- Program the carrier gas flow as described in Chapter 4, *Digital Gas Control*, or Chapter 5, *Manual Gas Control* according to the pneumatic modules installed.

NOTE If you do not have an automatic valve actuator installed, you must first perform the *Setting Up the OCI for Manual Injection* operating sequence on page 126.

WARNING! Hydrogen is a potentially dangerous gas. Refer to *Using Hydrogen* on page xl for safety information.

Manual Injection without an Automatic Actuator

1. Press **PREP RUN** to turn on the secondary cooling flow, if programmed.
2. When the **Ready to Inject** LED is lit, insert the needle of the syringe loaded with sample into the injector needle guide until the barrel of the syringe rests on the preset syringe guide. Refer to the *Setting Up the OCI for Manual Injection* operating sequence on page 126 for information on setting up the syringe guide.
3. Open the valve.
4. Insert the syringe through the valve and into the column as far as it will go.
5. Rapidly inject the sample.
6. Remove the syringe until the syringe barrel rests on the syringe guide.

7. Close the valve.
8. Press **START**.
9. Remove the syringe completely from the injector.

The GC completes the analysis as programmed.

Manual Injection with an Automatic Actuator

1. Press **PREP RUN** to switch on the secondary cooling flow, if programmed.
2. When the **Ready to Inject** LED is lit, insert the needle of the syringe loaded with sample through the actuator and into the injector needle guide as far as it will go.
3. Rapidly inject the sample.
4. Rapidly remove the syringe completely from the injector/actuator.

You need not press **START**. The GC will complete the analysis as programmed.

Injection Using an AS 2000 Autosampler

- Before you begin the autosampler injection, ensure that you have programmed the autosampler method in the **`AUTOSAMPLER`** menu and the autosampler sequence in the **`SEQUENCE`** table. Refer to *AS 2000 Autosampler Menu* in Chapter 24 and *Sequence Programming* in Chapter 29.

1. Press **PREP RUN** to turn on the secondary cooling flow, if programmed.
2. Press **SEQ CONTROL**.
3. Scroll to `Start Sequence` and press **ENTER** or **START**.

The autosampler will inject the samples according to the programmed sequence.

8

High Oven Temperature Cold On-Column Injector (HOT OC)

This chapter describes the High Oven Temperature Cold On-Column (HOT OC) injector for injections at very high temperatures, injection techniques, and operating sequences.

Chapter at a Glance…

Operating Sequences

HOT OC Overview

The On-Column Injector (OCI) described in Chapter 7 requires an optional device for injection at oven temperatures at or above 200 °C, regardless of the solvent used. A High Oven Temperature (HOT) device must be attached below the on-column injector and configured in the **CONFIGURE** menu.

As with the standard on-column injector, you can manually inject samples into the HOT OC injector with or without an automatic valve actuator. Refer to *On-Column Options* in Chapter 7 for more information about the automatic actuator. Figure 8-1 shows the HOT OC injector.

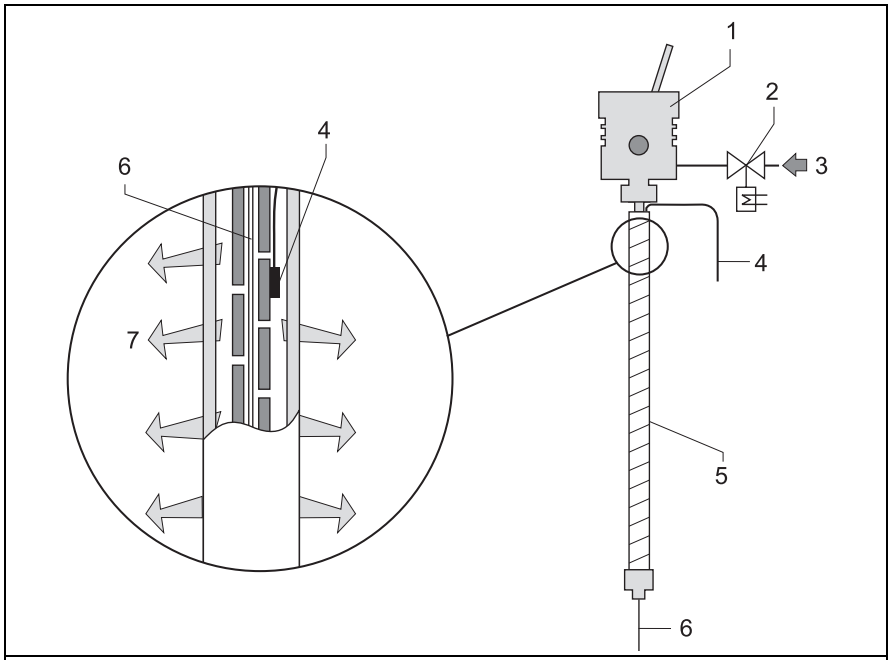

1. Cold On-Column Injector	5. HOT Device
2. Solenoid Valve	6. Capillary Column
3. Coolant Inlet	7. Coolant Exit
4. Thermocouple	

Figure 8-1. HOT Cold On-Column Injector

Optional Devices

In addition to the automatic actuator, the OCI with the HOT device can be modified with a solvent vapor exit valve.

Solvent Vapor Exit Valve

Large volume injection with the HOT OC requires an optional solvent vapor exit (SVE) valve. This valve vents solvent vapors that form during the sample injection. The SVE valve is an electronically activated, heated three-way valve.

The valve inlet connects to a tee piece that links the desolvation pre-column to the analytical column. The solvent vapors vent through the main outlet, which connects to a solvent waste bottle. The SVE valve has a high flow restrictor. This restrictor, a fine capillary tube, is placed in a special support heated by the valve. This configuration ensures a very small purge rate (around 0.01 mL/min) when the SVE valve is closed. This prevents solvent vapor back-diffusion into the analytical system.

HOT OC Injection Techniques

The HOT OC injection technique allows cold on-column injection even when the oven is kept at high temperatures. This can greatly reduce the analysis time.

This technique's advantages are:

- short analysis time, because there is no need to cool to a low oven temperature for injection
- short residence time for components affected by column activity
- isothermal analysis of high boiling components
- reduced effects of column bleed and carrier gas impurities

This technique is limited to a sample size of 1µl or less.

NOTE For information about the *On-Column Injector (OCI)*, refer to Chapter 7.

HOT OC Injector Menu

The **INLET (HOT OC)** menu contains the parameters for the HOT OC injector.

Press **LEFT INLET** or **RIGHT INLET** to display the menu shown in Table 8-1.

NOTE The injector and carrier gas menus are related. If you set a pressure at the carrier gas menu, that same pressure setting is reflected in the injector menu, and vice-versa.

Table 8-1. Inlet (HOT OC) Menu

Menu	Range	Comments
RIGHT INLET (HOT OC)		This line is the menu title bar.
HOT OC temp	25 °C–initial oven temp	This parameter defines the injector temperature.
HOT OC duration	0.00–999.99 min, ∞	This parameter defines the duration of the secondary cooling. When programmed, the secondary cooling valve is opened during **Prep Run**. If set to zero, the valve remains in the default condition.
Pressure	On/Off, 2–250 kPa or 7–700 kPa[1]	This line shows the carrier gas inlet pressure. Press **ON** to display the actual and setpoint values. Press **OFF** or **0** to display the actual value and turn off the inlet pressure, which turns off the flow.
SVE temp[2]	On/Off, 0–250 °C	If a solvent vapor exit valve is installed, this parameter defines the SVE valve temperature.
SVE duration[2]	0.00–999.99 min, ∞	This parameter defines the duration of the solvent vapor exit event. When the duration is set to zero, the SVE valve remains in the default condition.

1. 0.3–36 psi, 0.02–2.5 bar; 1.00–100 psi, 0.07–7.00 bar.
2. This menu item appears only if the solvent vapor exit valve option is installed and configured (for large volume injections).

OPERATING SEQUENCE

Programming the HOT OC Injector

Before you begin programming, do the following:

- Verify that the HOT device, together with a column, is correctly installed and the system is free of leaks.
- Program the carrier gas flow as described in Chapter 4, *Digital Gas Control*, or Chapter 5, *Manual Gas Control* according to the pneumatic modules installed.

1. Press **LEFT INLET** or **RIGHT INLET** to open the **`INLET (HOT OC)`** menu, depending on the position of the HOT on-column injector.
2. Scroll to `HOT OC temp` and enter the control temperature for the HOT OC cooling device during injections.
3. Scroll to `HOT OC duration` and enter the time the injector temperature must be maintained. This value depends on the initial injector temperature, solvent boiling point, and sample size.

SVE Valve

1. If the solvent vapor exit valve is installed and configured, scroll to `SVE temp` and enter an appropriate temperature, depending on the solvent boiling point.
2. Scroll to `SVE duration` and enter the time the solvent vapor exit valve must be kept open to allow the solvent to evaporate adequately.

OPERATING SEQUENCE

Performing a HOT OC Injection

Use the following sequence to inject a sample into a cold on-column injector with the HOT device.

Before injection, do the following:

- Verify that the HOT device, together with a column, is correctly installed and the system is free of leaks.
- Check the oven temperature and detector temperature.
- Program the carrier gas flow as described in Chapter 4, *Digital Gas Control*, or Chapter 5, *Manual Gas Control* according to the pneumatic modules installed.

WARNING! Hydrogen is a potentially dangerous gas. Refer to *Using Hydrogen* on page xl for safety information.

Manual Injection without an Automatic Actuator

1. Press **PREP RUN**. The secondary flow switches on and cools the HOT device to the programmed temperature.
2. When the **Ready to Inject** LED is lit, insert the needle of the syringe loaded with sample into the injector needle guide until the barrel of the syringe rests on the preset syringe guide.
3. Open the valve.
4. Insert the syringe through the valve and into the column as far as it will go.
5. Rapidly inject the sample.
6. Remove the syringe until the syringe barrel rests on the syringe guide.
7. Close the valve.
8. Press **START**.

9. Remove the syringe completely from the injector. The GC will complete the analysis as programmed.

Manual Injection with an Automatic Actuator

1. Press **PREP RUN**. The secondary flow switches on and cools the HOT device to the programmed temperature.

2. When the **Ready to Inject** LED is lit, insert the needle of the syringe loaded with sample through the actuator and into the injector needle guide as far as it will go.

3. Rapidly inject the sample.

4. Rapidly remove the syringe completely from the injector/actuator.

You do not need to press **START**. The GC will complete the analysis as programmed.

Injection Using an Autosampler

Before you begin the autosampler injection, ensure that you have programmed the autosampler method in the **AUTOSAMPLER** menu and the autosampler sequence in the **SEQUENCE** menu. Refer to *AS 2000 Autosampler Menu* in Chapter 24 and *Sequence Programming* in Chapter 29 for instructions.

1. Press **PREP RUN**. The secondary flow switches on and cools the HOT device to the programmed temperature.

2. Press **SEQ CONTROL**.

3. Scroll to `Start Sequence` and press **ENTER** or **START**.

The autosampler will inject the samples according to the programmed sequence.

9

Large Volume On-Column Injector (LVOCI)

This chapter describes the Large Volume On-Column Injector (LVOCI) used for large volume injections with an autosampler.

Chapter at a Glance...

Operating Sequences

LVOCI Overview

The LVOCI is a special version of the standard on-column injector, described in Chapter 7, which automatically introduces large volume liquid samples with the AS 2000 autosampler. The autosampler injects the samples directly into a fused silica capillary column system as shown in Figure 9-1.

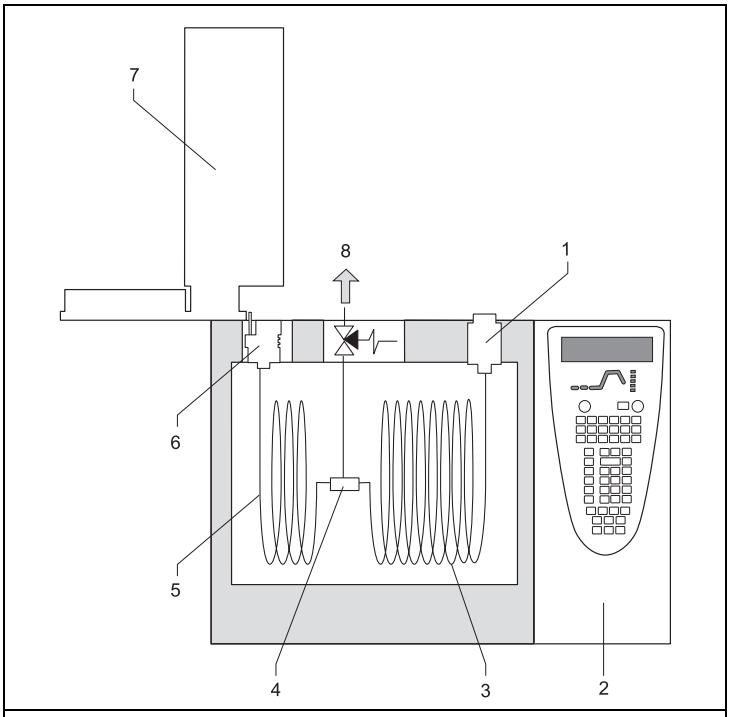

1. Detector	5. Desolvation Pre-Column
2. TRACE GC	6. On-Column Injector
3. Analytical Column	7. AS 2000 Autosampler
4. Tee Connection	8. Solvent Vapor Exit (SVE)

Figure 9-1. TRACE GC Configuration for Large Volume On-Column Injection

The LVOCI system has a Solvent Vapor Exit (SVE) valve, which vents the solvent vapor formed during a sample injection.

The SVE valve is an electronically activated, heated three-way valve. The valve inlet connects to a tee piece linking the desolvation pre-column to the analytical column.

The solvent vapors vent through the main outlet, that connects to a solvent waste bottle with a filter to the atmosphere. The main outlet also connects to a high flow restrictor, which is placed in a special support heated by the valve.

This configuration ensures a very small purge rate (around 0.01 mL/min) when the SVE is closed. This prevents the back-diffusion of solvent inside the system.

LVOCI Injection Techniques

Trace analysis requires injecting relatively large volumes of sample to make better use of the available sample material and to simplify the sample preparation sequence. Figure 9-2 shows the LVOCI injection technique.

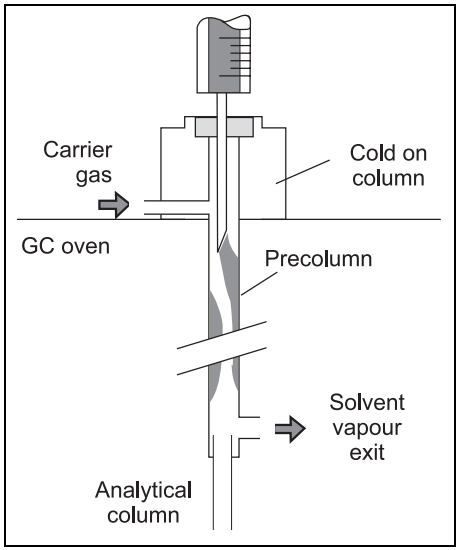

Figure 9-2. LVOCI Injection Technique

Among the available techniques, the on-column injection technique provides the most accurate and reliable results, making it the preferred technique whenever the sample is not excessively dirty.

On-column injection is also the best technique for analyzing volatile components in diluted solutions because of relatively low volatile losses compared to large volume PTV applications.

Mechanism of Sample Desolvation

Figure 9-3 shows the large volume on-column injection system.

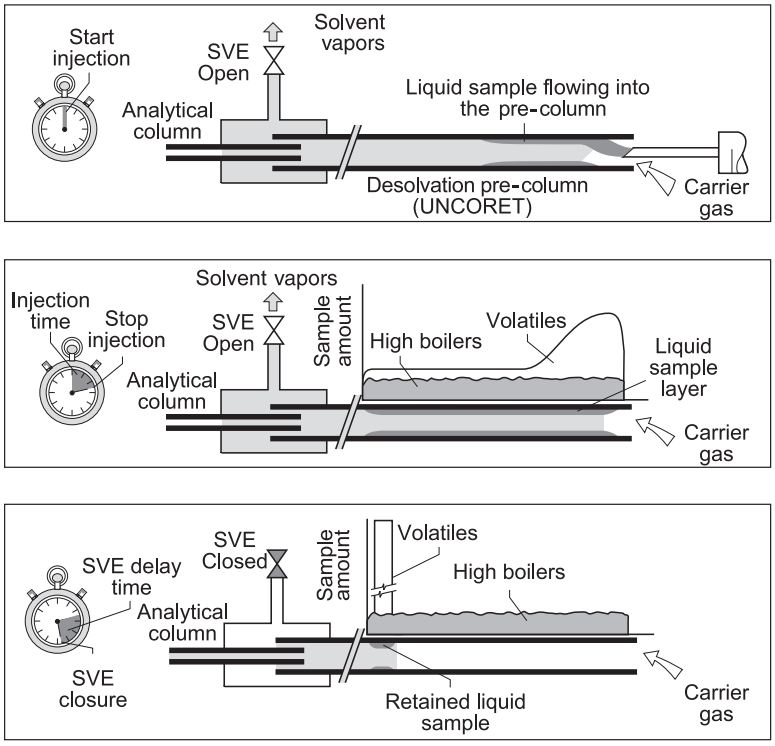

Figure 9-3. Large Volume On-Column Injection System

The liquid sample is injected into a pre-column. The pre-column temperature and pressure conditions cause a part of the solvent to evaporate during injection while the remaining part flows as liquid into the pre-column, forming a flooding zone. This is shown in the top part of Figure 9-3.

The solvent vapors formed during the sample injection are vented through the SVE, located between the pre-column and the analytical capillary column.

Large sample volume on-column injection requires uncoated pre-columns at least as long as the flooded zone. For 0.53 mm ID pre-columns, the zone flooded by 1µL of sample liquid is approximately 10–15 cm long.

Solvent evaporation and solute reconcentration (desolvation) are performed in the 15 m x 0.53 mm ID deactivated (Uncoret™) pre-column which combines the uncoated and the retaining pre-column in one piece. The last 3 m are coated with SE-54/0.45 µm film thickness.

The 12 m x 0.53 mm uncoated section can safely retain about 80 µl of liquid sample. The pre-column ends in a tee union connected to the analytical column and the SVE.

The samples are injected by an autosampler with an adjustable injection speed. Some solvent enters the column, while a large portion of the solvent evaporates and exits through the SVE valve. If the sample volume or the speed of injection exceeds the liquid retention capacity of the uncoated pre-column, the sample enters the column and destroys the chromatography.

An autosampler with adjustable injection speed introduces the sample. Most vapors escape through the open SVE. At the end of the sample injection, the liquid sample coats up to the full length of the uncoated pre-column, as shown in the center part of Figure 9-3.

Solvent evaporation continues, removing solvent from the rear of the sample film. High-boiling components are deposited onto the dry pre-column surface. Volatile components evaporate and are trapped again by the solvent in the pre-column.

Solvent Effects

Solvent effects can be used to trap and reconcentrate samples, increasing the analysis effectiveness.

Solvent Trapping

Liquid sample, advanced by the carrier gas, forms a layer on the column wall. The solvent evaporation proceeds from the rear to the front of this flooded zone, which creates a *solvent trapping effect*. The thick layer of liquid sample retains the volatile components until all solvent evaporates. Thus, all volatile materials start chromatography as a sharp band.

Solvent trapping can be achieved with a small amount of liquid solvent in the pre-column. This allows the impurities from injected solvent to evaporate and vent through the SVE valve. This is known as *partially concurrent solvent evaporation*.

Phase Soaking

The second solvent effect, *phase soaking*, helps reconcentrate the most volatile sample components not fully trapped or retained by the sample layer. As the carrier gas, saturated with solvent vapor, passes from the sample-coated inlet into the retaining pre-column, the stationary phase film picks up solvent and swells. Depending on the solvent compatibility with the stationary phase, film thickness may increase by a factor of five, which increases retention power. Initial bands are reconcentrated by a dynamic process.

Sample Reconcentration

Liquid sample spreading in the column inlet causes band broadening in space. Components that are not vaporized during the solvent evaporation remain distributed over the whole length of the flooded column inlet. Since initial bands longer than 20–40 cm (sample volumes exceeding 1–2 µL) cause chromatogram peaks to broaden, you must reconcentrate them.

You can reconcentrate the sample by using an uncoated pre-column to achieve a retention gap effect. As the material is spread in a zone of a retentive power far below that of the separation column, bands are focused at the entrance of the coated separation column.

Retention Gaps

A *retention gap* is the initial part of the column or pre-column with a lower retention power than the analytical column. Retention gaps are recommended for high-resolution capillary gas chromatography for a number of reasons:

- Retention gaps allow you to reconcentrate a broadened inlet band caused by liquid sample flooding eliminating the problem of the flooded zone in splitless and on-column injection.
  The flooded zone is the part of the column that becomes wet with solvent after an on-column or splitless injection because:
  - — liquid sample moves slowly, drastically reducing the analytical column's efficiency due to interference with the chromatographic partition process.
  - — liquid sample interacts with stationary phase. In a flooded zone, the sample solvent can partially strip the stationary phase off the column wall. This can lead to sample contamination and gradual deterioration in the column performance. The sample solvent, if allowed to condense within the analytical column, may even extract a bonded phase, although to a much lesser extent.

  A retention gap of deactivated fused silica limits the flooded zone to a part of the column where no chromatography takes place.
- Retention gaps act as pre-columns for sample containing large amounts of nonvolatile components.
- Wide-bore retention gaps allow fully automated on-column injections in small diameter capillary columns using the autosampler.

Uncoret™ Pre-Columns

The Uncoret™ pre-column is a deactivated fused silica wide-bore column that consists of a 15 m long, 0.53 mm ID, where the first 12 m are uncoated pre-column that functions as a retention gap, and the last 3 m are coated segment (SE-54/0.45 µm film thickness), which functions as a retaining pre-column.

The coated section reduces the eventual loss of volatile substances during the last solvent evaporation phase.

This special pre-column receives the solvent/sample when it is injected with the AS 2000 autosampler syringe at the appropriate speed through the on-column injector.

When the sample is injected inside the empty pre-column, equilibrium is established between the evaporating solvent and the liquid deposited on the pre-column wall. The solvent vapor exit valve speeds up solvent evaporation.

To avoid sample loss, the injected liquid must not exceed the liquid capacity of the uncoated part of the pre-column. This technique prevents liquid sample from entering the stationary phase of the retaining pre-column.

The wet zone length depends on the solvent type, the flow, and the pressure and temperature conditions in the pre-column.

The Uncoret™ pre-column attaches to a 0.32 mm ID or 0.25 mm ID fused silica capillary column with a tee connector.

Early Vapor Exit

The solvent vapors formed by the sample desolvation exit through the *early vapor exit*. The vapor exit is positioned at the earliest possible point to shorten the vapor flow path to a minimum and to achieve a maximum discharge rate at a given inlet pressure.

A maximum split ratio can be achieved at the tee union dividing the flow from the pre-column between the vapor exit and the analytical column. This can minimize the amount of vapor reaching the detector.

A section of coated pre-column retains solutes until the vapor exit closes. The vapor exit is usually closed shortly before the solvent evaporation ends. The residual liquid still retains the volatile components. See the bottom of Figure 9-3 on page 142. Remaining solvent exits through the separation column. When solvent evaporation is completed, volatile components start the chromatography process.

The reconcentration of components with high boiling points occurs as they move to the analytical column entrance at an increased oven temperature.

System Regulation

Partially concurrent solvent evaporation and using an early vapor exit complicate selecting appropriate analytical conditions.
Partially concurrent solvent evaporation requires sample introduction at a rate slightly above the solvent evaporation rate in the pre-column.

— A slower introduction causes all solvent to evaporate concurrently, eliminating solvent trapping.

— A faster introduction rate, however, results in flooding the retaining pre-column and eventually the column, because there is an insufficient proportion of the solvent evaporating concurrently.

The early vapor exit must be closed as late as possible, after most of the solvent has been evaporated, but before the solute material of interest starts leaving.

With solvent trapping, the sample film retains volatile components up to the end of the solvent evaporation. You can safely close the exit valve shortly before the end of the solvent evaporation.

Control of operations such as evaporation and injection is automatically carried out through the large volume software.

Automatic Injections

The AS 2000 autosampler performs automatic large volume on-column injections. The injector must be equipped with the appropriate upper block for automatic injections.

LV On-Column Injector Menu

The **INLET (LVOCI)** menu contains the parameters for large volume on-column injectors if the GC has been configured for an LVOCI.

Press **LEFT INLET** or **RIGHT INLET** to display the menu, depending on the injector position.

Table 9-1. Inlet (LVOCI) Menu

Menu	Range	Comments
RIGHT INLET (LVOCI)		This line is the menu title bar.
Pressure	On/Off, 2–250 kPa or 7–700 kPa[1]	This line shows the carrier gas inlet pressure. Press **ON** to display the actual and setpoint values. Press **OFF** or **0** to display the actual value and to turn off the inlet flow.
Sec. cool time	0–999.99 min, ∞	This line shows the secondary cooling time. If set to ∞, the solenoid valve remains in the default condition. The valve opens at the beginning of the **Standby** mode, when programmed.
SVE temp[2]	On/Off, 0–250 °C	This line only appears when the optional solvent vapor exit valve is installed in the system. This parameter defines the solvent vapor exit valve temperature.
SVE duration[2]	0–999.99 min, ∞	This parameter defines the duration of the solvent vapor exit event. When the duration is set to zero, the SVE valve remains in the default condition.
Evap pressure[2]	2–250 kPa or 7-700 kPa	This parameter defines the pressure used during the solvent evaporation phase.
Evap duration[2]	0-999.9 min	This parameter define the duration of the evaporation event.

1. 0.3–36 psi, 0.02–2.5 bar; 1.00–100 psi, 0.07–7.00 bar.
2. This menu item appears only if the solvent vapor exit valve option is installed and configured.

OPERATING SEQUENCE

Programming the LVOCI

The liquid sample is introduced directly into a pre-column within the column oven. The injector itself is cooled independently. The oven temperature and the secondary cooling system determine the actual injection temperature.

The LVOCI has special PC-based software that calculates all the critical injection parameters for the large volume injection technique.

Before downloading the calculated data to the GC, do the following:

- Verify that an Uncoret™ retaining pre-column and analytical column are correctly connected to the low-volume tee piece and the SVE valve. For instructions on connecting the columns, refer to Chapter 15, *Columns*.
- Verify that the system is free of leaks.
- Program the carrier gas flow as described in Chapter 4, *Digital Gas Control*, or Chapter 5, *Manual Gas Control* according to the pneumatic modules installed.

Once you have downloaded the injection parameters to the GC, you are ready to begin the injection sequence.

OPERATING SEQUENCE

Performing an LVOCI Injection

Use the following sequence to inject a sample into an LVOCI.

Before injection, do the following:

- Verify that an Uncoret™ retaining pre-column and analytical column are correctly installed to the low-volume tee piece and the SVE valve. For instructions on connecting the columns, refer to Chapter 15, *Columns*.
- Verify that the system is free of leaks.
- Program the carrier gas flow as described in Chapter 4, *Digital Gas Control*, or Chapter 5, *Manual Gas Control* according to the pneumatic modules installed.

NOTE Before you begin an autosampler injection, ensure that you have downloaded the large volume injection parameters from the large volume software and programmed the autosampler sequence in the **SEQUENCE** menu. Refer *AS 2000 Autosampler Menu* in Chapter 24 and *Sequence Programming* in Chapter 29.

1. Press **PREP RUN** to switch on the secondary cooling flow and open the solvent vapor exit valve.
2. Press **SEQ CONTROL**.
3. Scroll to `Start Sequence` and press **ENTER** or **START**.

The autosampler will inject the samples according to the programmed sequence.

10

Packed Column Injector (PKD)

This chapter describes the Packed (PKD) column injector and explains the packed column operating sequences.

Chapter at a Glance...

Operating Sequences

PKD Overview

The PKD injector, shown in Figure 10-1, is used for injections with the sample vaporizing directly in the column. The PKD standard injector accepts metal or glass packed columns. The injector temperature may range from ambient to 400 °C. Injector temperature is regulated by a temperature controller in the GC CPU board and monitored by a platinum wire sensor.

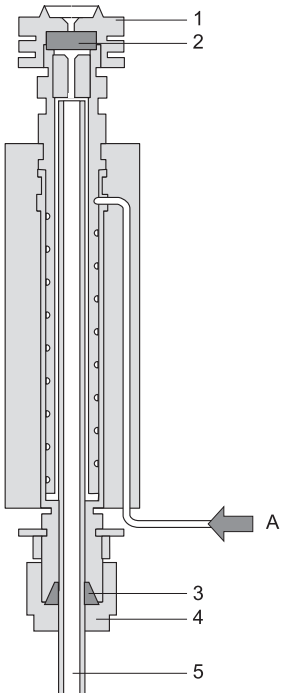

1. Septum Cap	4. Column Nut
2. Septum	5. Packed Column
3. Column Ferrule	A. Carrier Gas Inlet

Figure 10-1. Packed Column Injector

Septa

You should use a good quality septum with a long life expectancy, good resistance to deformation, and a low bleed level, even at high temperatures. Additionally, you can use high-temperature septa for both manual and automatic injections.

Adapters

You must install a proper different glass liners depending on the type of column used. Table 10-1 shows the PKD adapter options.

Table 10-1. Adapters for Packed Column Injectors

Adapter	Type of Column
1	packed column 1/4-inch and 6-mm OD
2	packed column 4-mm OD
3	packed column 1/8-inch OD

PKD Injection Techniques

The sample is normally injected directly into the top of the column. The inlet temperature should be sufficiently high to guarantee complete sample vaporization while avoiding the possible decomposition of sample components.

A glass liner prevents nonvolatile substances present in a sample from contaminating the column.

PKD Injector Menu

The **INLET (PKD)** menu contains the parameters for packed columns. Press **LEFT INLET** or **RIGHT INLET** to display the menu, depending on the injector position.

NOTE The injector and carrier gas menus are related. If you set a pressure at the carrier gas menu, that same pressure setting is reflected in the injector menu, and vice-versa.

Table 10-2. Inlet (PKD) Menu

Menu	Range	Comments
XXXX INLET (PKD)		This line is the menu title bar.
Temp	On/Off, 50–400 °C	This line shows the base injector temperature. Press **ON** to turn on the heater and display the actual and setpoint values. Press **OFF** to turn off the heater and to display the actual value.
Pressure[1]	On/Off, 2–250 kPa or 7–700 kPa[2]	This line shows the carrier gas inlet pressure. Press **ON** to display the actual and setpoint values. Press **OFF** or **0** to display the actual value and to turn off the inlet flow.

1. This parameter will be displayed only if your system is configured for DPFC.
2. 0.3–36 psi, 0.02–2.5 bar; 1.00–100 psi, 0.07–7.00 bar.

OPERATING SEQUENCE

Replacing a Septum

Materials required**:**

- septum
- tweezers

WARNING! **The injector fittings may be hot. Make sure the injector is at room temperature before replacing the septum.**

1. Remove the septum cap from the injector.
2. Using tweezers, remove the septum from the septum cap.
3. Place a new septum in the septum cap.

CAUTION **To avoid contamination, do not touch the septum with your hands.**

4. Gently tighten the septum cap onto the injector assembly until finger-tight.

   Do not overtighten the septum cap. The septum will deform and may be difficult to penetrate with the syringe needle.

OPERATING SEQUENCE

Programming the PKD Injector

Before you begin programming, do the following:

- Verify that a column is correctly installed, the correct adapter is in the injector, and the system is free of leaks.
- Check the oven temperature and detector temperature.
- Program the carrier gas flow as described in Chapter 4, *Digital Gas Control*, or Chapter 5, *Manual Gas Control* according to the pneumatic modules installed.

1. Press **LEFT INLET** or **RIGHT INLET** to open the **`INLET (PKD)`** menu, depending on the position of the PKD injector.
2. Scroll to `Temp`, press **ON**, then enter the appropriate injector temperature using the numeric keypad.

OPERATING SEQUENCE

Performing a PKD Injection

Use the following sequence to inject a sample into a PKD injector.

Before injecting the sample, do the following:

- Verify that a column and adapter, is correctly installed and the system is free of leaks.
- Check the oven temperature and detector temperature.
- Program the carrier gas flow as described in Chapter 4, *Digital Gas Control*, or Chapter 5, *Manual Gas Control* according to the pneumatic modules installed.

WARNING! Hydrogen is a potentially dangerous gas. Refer to *Using Hydrogen* on page xl for safety information.

Manual Injection

1. Press **PREP RUN**.
2. When the **Ready to Inject** LED is lit, insert the syringe into the injector, inject the sample rapidly, and remove the syringe from the injector.
3. Press **START**.

The GC will complete the analysis as programmed.

Injection Using an Autosampler

Before you begin the autosampler injection, ensure that you have programmed the autosampler method in the **`AUTOSAMPLER`** menu and the autosampler sequence in the **`SEQUENCE`** menu. For instructions refer to

- *AS 2000 Autosampler Menu* in Chapter 24 and *Sequence Programming* in Chapter 29.
- *HS 2000 Autosampler Menu* in Chapter 25 and *Sequence Programming* in Chapter 30.

1. Press **PREP RUN**.
2. Press **SEQ CONTROL**.
3. Scroll to `Start Sequence` and press **ENTER** or **START**.

The autosampler will inject the samples according to the programmed sequence.

11

Purged Packed Column Injector (PPKD)

This chapter describes Purged Packed (PPKD) column injector, which has a septum purge. Included in this chapter are PPKD injection techniques and operating sequences.

Chapter at a Glance...

Operating Sequences

PPKD Overview

The Purged Packed (PPKD) column injector is a packed column injector with a septum purge. The PPKD standard injector accepts wide-bore capillary columns. The sample vaporizes in a liner and enters the wide-bore capillary column. The injector temperature is controllable from 50 °C to 400 °C. Figure 11-1 shows the PPKD injector.

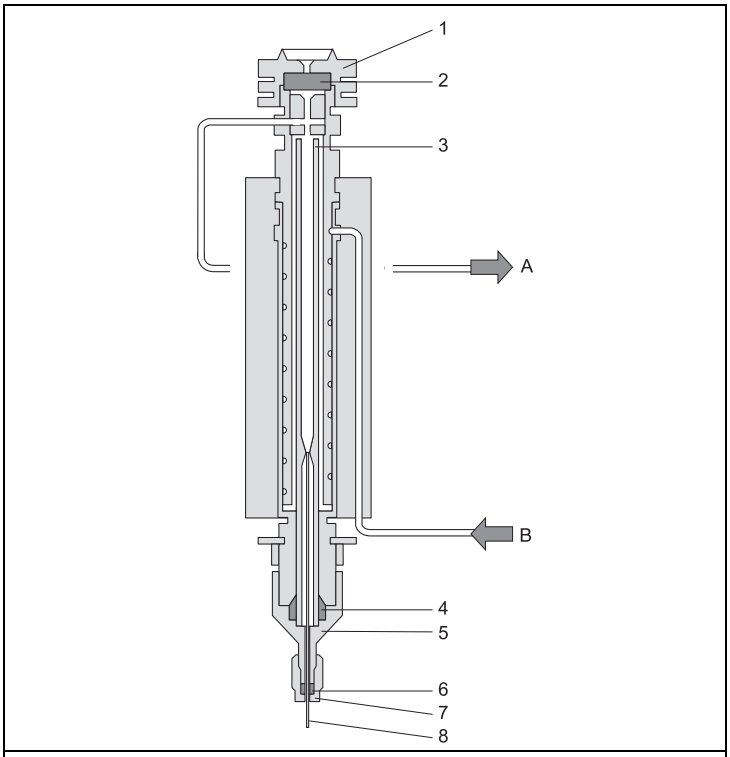

1. Septum Cap	6. Column Ferrule
2. Septum	7. M4 Split Retaining Nut
3. Liner	8. Wide-Bore Column
4. Liner Ferrule	A. Septum Purge Line
5. Adapter	B. Carrier Gas Inlet

Figure 11-1. Purged Packed Column Injector

Septa

You should use high temperature septa with a longer life expectancy, good resistance to deformation, and a low bleed level, even at high temperatures. Use high temperature septa for both manual and automatic injections.

Liners

Two different glass liners can be used for wide-bore capillary columns:

- 2 mm ID
- 4 mm ID

PPKD Injection Techniques

The inlet temperature should be sufficiently high to guarantee the sample completely vaporizes while avoiding the possible sample component decomposition.

PPKD Injector Menu

The **`INLET (PPKD)`** menu contains the operating parameters for the purged packed injector. The parameters you can edit depend on the operating mode chosen: `Wide bore`, `Packed`, `Wide bore w/surge` or `Packed w/surge`.

- In the `Wide bore` and `Wide bore w/surge` operating modes, the column flow is regulated by changing the pressure as the temperature changes.
- In the `Packed` and `Packed w/surge` operating modes, the column flow is controlled through true mass flow control.

Press **LEFT INLET** or **RIGHT INLET** to open the **`LEFT`** or **`RIGHT INLET (PPKD)`** injector menu.

```
      LEFT INLET (PPKD)

 Temp              250  250
 Pressure[1]      10.6   10.6
 Mode:              Packed<
```

1. This parameter appears only if your GC is configured for DPFC carrier gas regulation.

The `Mode:` menu item displays the current operating mode.

Press **MODE/TYPE** to open the **`INLET MODE`** submenu.

```
        XX INLET MODE

* Wide bore                  <
  Packed
  Wide bore w/surge[1]
  Packed w/surge[1]
```

1. This parameter appears only if your GC is configured for DPFC carrier gas regulation.

Scroll to the mode you want to use and press **ENTER** to confirm the selection. An asterisk appears on the left of the operating mode selected.

NOTE The injector and carrier gas menus are related. If you set a pressure in the carrier gas menu, that same pressure setting is reflected in the injector menu, and vice-versa.

Table 11-1. Inlet (PPKD) Menu

Menu	Range	Comments
`XXXX INLET (PPKD)`		This line is the menu title bar.
`Temp`	On/Off, 0–400 °C	This line shows the base injector temperature. Press **ON** to turn on the heater and display the actual and setpoint values. Press **OFF** to turn off the heater and display the actual value.
`Pressure`[1]	On/Off, 2–250 kPa or 7–700 kPa[2]	This line shows the carrier gas inlet pressure. Press **ON** to display the actual and setpoint values. Press **OFF** or **0** to turn off the inlet flow.
`Mode:`		This line displays the currently selected operating mode. Press **ENTER** to open the **`INLET MODE`** submenu.
`Surge pressure`[1]	On/Off, 2–250 kPa or 7–700 kPa[2]	This line indicates the surge pressure. Only used with **`packed w/surge`** and **`wide bore w/surge`** modes.
`Surge duration`[1]	0–999.9 min, ∞	This line displays the duration of surge pressure after run start.
`Const sept purge?`	Yes/No	Press **YES** to activate a constant septum purge to continuously flush the injector with a purge flow of 5 mL/min for helium and nitrogen or 10 mL/min for hydrogen.
`Stop purge for`	0–999.9 min, ∞	This line appears only when `Constant septum purge` is set to `No`.

1. This parameter appears only if your GC is configured for DPFC carrier gas regulation.
2. 0.3–36 psi, 0.02–2.5 bar; 1.00–100 psi, 0.07–7.00 bar.

OPERATING SEQUENCE

Replacing a Septum

Materials required**:**

- septum
- tweezers

WARNING! The injector fittings may be hot. Make sure the injector is at room temperature before replacing the septum.

1. Remove the septum cap from the injector.
2. Using tweezers, remove the septum from the septum cap.
3. Place a new septum in the septum cap.

CAUTION To avoid contamination, do not touch the septum with your hands.

4. Gently tighten the septum cap onto the injector assembly until finger-tight.

   Do not overtighten the septum cap. The septum will deform and may be difficult to penetrate with the syringe needle.

OPERATING SEQUENCE

Programming the PPKD Injector Wide-Bore Mode

Before programming the purged packed column injector, do the following:

- Verify that a wide-bore column is correctly installed, the correct liner is in the injector and the system is free of leaks.
- Check the oven temperature and detector temperature.
- Program the carrier gas flow as described in Chapter 4, *Digital Gas Control*, or Chapter 5, *Manual Gas Control* according to the pneumatic modules installed.

WARNING! Hydrogen is a potentially dangerous gas. Refer to *Using Hydrogen* on page xl for safety information.

1. Press **LEFT INLET** or **RIGHT INLET** to open the `INLET (PPKD)` menu, depending on the position of the PPKD injector.
2. Scroll to `Mode:` and press **MODE/TYPE**.
3. Scroll to `Wide bore` and press **ENTER**.
4. Scroll to `Temp` and press **ON** or enter the appropriate injector temperature using the numeric keypad.
5. If constant septum purge is required, scroll to `Const sept purge?` and press **YES**. If constant septum purge is not required, press **NO** and scroll to `Stop purge for` to enter the time the purge flow should be interrupted.

OPERATING SEQUENCE

Programming the PPKD Injector Wide-Bore With Surge Mode

NOTE This feature is only available for GCs equipped with DPFC carrier gas modules.

In the `Wide bore w/surge` mode, a carrier gas pressure surge activates during the injection phase for a preset time. This surge accelerates the transfer process of the substances from the injector to the column. The pressure surge starts in the **Prep Run** phase and ends at the end of the programmed `Surge duration`.

Before programming the packed column injector, do the following:

- Verify that a wide-bore column is correctly installed, the correct liner is in the injector, if used, and the system is free of leaks.
- Check the oven temperature and detector temperature.
- Program the carrier gas flow as described in Chapter 4, *Digital Gas Control*, or Chapter 5, *Manual Gas Control* according to the pneumatic modules installed.

WARNING! Hydrogen is a potentially dangerous gas. Refer to *Using Hydrogen* on page xl for safety information.

1. Press **LEFT INLET** or **RIGHT INLET** to open the **`INLET (PPKD)`** menu, depending on the position of the PPKD injector.
2. Scroll to `Mode:` and press **MODE/TYPE**.
3. Scroll to `Wide bore w/surge` and press **ENTER**.
4. Scroll to `Surge pressure` and enter the value of the pressure surge.
5. Scroll to `Surge duration` and enter the duration of the pressure surge.
6. Scroll to `Temp` and press **ON** or enter the appropriate injector temperature using the numeric keypad.

7. If constant septum purge is required, scroll to `Const sept purge?` and press **YES**. If constant septum purge is not required, press **NO** and scroll to `Stop purge for` to enter the time the purge flow should be interrupted.

OPERATING SEQUENCE

Programming the PPKD Injector Packed Mode

Before programming the purged packed column injector, do the following:

- Verify that a column is correctly installed, the correct liner is in the injector, if used, and the system is free of leaks.
- Check the oven temperature and detector temperature.
- Program the carrier gas flow as described in Chapter 4, *Digital Gas Control*, or Chapter 5, *Manual Gas Control* according to the pneumatic modules installed.

WARNING! Hydrogen is a potentially dangerous gas. Refer to *Using Hydrogen* on page xl for safety information.

1. Press **LEFT INLET** or **RIGHT INLET** to open the **`INLET (PPKD)`** menu, depending on the position of the PPKD injector.
2. Scroll to `Mode:` and press **MODE/TYPE**.
3. Scroll to `Packed` and press **ENTER**.
4. Scroll to `Temp` and press **ON** or enter the appropriate injector temperature using the numeric keypad.
5. If constant septum purge is required, scroll to `Const sept purge?` and press **YES**. If constant septum purge is not required, press **NO** and scroll to `Stop purge for` to enter the time the purge flow should be interrupted.

OPERATING SEQUENCE

Programming the PPKD Injector Packed With Surge Mode

NOTE This feature is only available for GCs equipped with DPFC carrier gas modules.

In the `Packed w/surge` mode, a carrier gas pressure surge activates during the injection phase for a preset time. This surge accelerates the transfer process of the substances from the injector to the column. The pressure surge starts in the **Prep Run** phase and ends at the end of the programmed `Surge duration`.

Before programming the packed column injector, do the following:

- Verify that a column is correctly installed, the correct liner is in the injector, if used, and the system is free of leaks.
- Check the oven temperature and detector temperature.
- Program the carrier gas flow as described in Chapter 4, *Digital Gas Control*, or Chapter 5, *Manual Gas Control* according to the pneumatic modules installed.

WARNING! Hydrogen is a potentially dangerous gas. Refer to *Using Hydrogen* on page xl for safety information.

1. Press **LEFT INLET** or **RIGHT INLET** to open the **`INLET (PPKD)`** menu, depending on the position of the PPKD injector.
2. Scroll to `Mode:` and press **MODE/TYPE** then scroll to `Packed w/surge` and press **ENTER**.
3. Scroll to `Surge pressure` and enter the value of the pressure surge.
4. Scroll to `Surge duration` and enter the duration of the pressure surge.
5. Scroll to `Temp` and press **ON** or enter the appropriate injector temperature using the numeric keypad.

6. If constant septum purge is required, scroll to `Const sept purge?` and press **YES**. If constant septum purge is not required, press **NO** and scroll to `Stop purge for` to enter the time the purge flow should be interrupted.

OPERATING SEQUENCE

Performing a PPKD Injection

Before injecting the sample, do the following:

- Verify that the column and liner, if used, are correctly installed and the system is free of leaks.
- Check the oven temperature and detector temperature.
- Program the carrier gas flow as described in Chapter 4, *Digital Gas Control*, or Chapter 5, *Manual Gas Control* according to the pneumatic modules installed.

WARNING! Hydrogen is a potentially dangerous gas. Refer to *Using Hydrogen* on page xl for safety information.

Manual Injection

1. Press **PREP RUN**.
2. When the **Ready to Inject** LED is lit, insert the syringe into the injector, inject the sample rapidly, and remove the syringe from the injector.
3. Press **START**.

The GC will complete the analysis as programmed.

Injection Using an Autosampler

Before you begin the autosampler injection, ensure that you have programmed the autosampler method in the **`AUTOSAMPLER`** menu and the autosampler sequence in the **`SEQUENCE`** menu. For instructions refer to.

- *AS 2000 Autosampler Menu* in Chapter 24 and *Sequence Programming* in Chapter 29.
- *HS 2000 Autosampler Menu* in Chapter 25 and *Sequence Programming* in Chapter 30.

1. Press **PREP RUN**.
2. Press **SEQ CONTROL**.
3. Scroll to `Start Sequence` and press **ENTER** or **START**.

The autosampler will inject the samples according to the programmed sequence.

12

Programmable Temperature Vaporizing Injector (PTV)

This chapter describes the Programmable Temperature Vaporizing (PTV) injector and contains operating sequences for the different PTV operating modes.

Chapter at a Glance...

Operating Sequences

PTV Overview

The BEST (Brightly Enhanced Sample Transfer) PTV injector, shown in Figure 12-1, allows you to vary the temperature during injection in both split and splitless operating modes. This programmable temperature variation can eliminate many of the unwanted effects that can occur with traditional hot injection techniques, such as distillation of the sample within the needle and large vapor clouds inside the injector chamber.

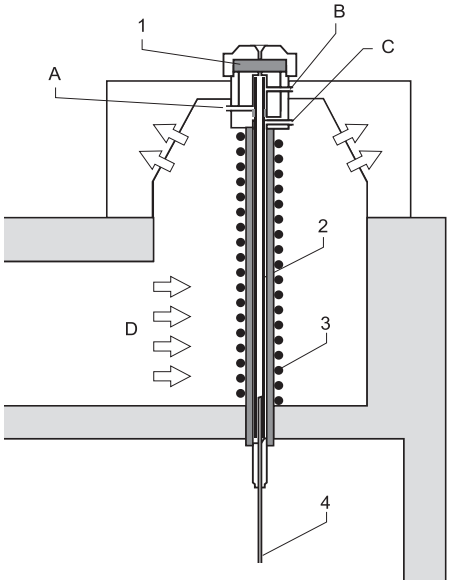

1. Septum	A. Carrier Gas Inlet
2. Liner	B. Septum Purge Line
3. Heating Element	C. Split Line
4. Capillary Column	D. Forced Cooling

Figure 12-1. Programmable Temperature Vaporizing Injector

The BEST PTV can be used in six different operating modes:

- PTV Split, used with concentrated samples when the sensitivity is not a problem.
- PTV Splitless, used for trace analysis.
- PTV Solvent Split, used when the solvent or the reagent is a problem for the detector or the column.
- PTV Large Volume, used to increase the sensitivity of the analysis through the injection of large volume sample amount.
- Constant Temp Split, for small sample volume and small volatility range.
- Constant Temp Splitless without or with pressure surge, for small sample volume and trace analysis.

In Constant Temperature (CT) mode, the PTV functions like a split/splitless injector. Sample volumes are lower than when using an S/SL injector because of the smaller PTV liner volume.

The PTV injector can analyze relatively dirty samples that can not be analyzed using a traditional on-column technique.

The injector temperature, from ambient to 400 ºC, is regulated by a temperature controller in the GC CPU card and monitored by a platinum wire sensor.

Liquid nitrogen or liquid carbon dioxide is used as a coolant for operating below ambient temperature (down to -50 with liquid N_2 ; down to –30 ºC with liquid CO_2). The coolant flow is controlled by an optional cryogenic system which must be connected to the GC and enabled in the **CONFIGURE** menu. Refer to paragraph *PTV Cryogenic Operation* on page 192 and to the *Configuring Cryogenic Operation* on page 205 for more information.

WARNING! Before using liquid nitrogen or liquid carbon dioxide, read the indication of hazard and the instructions reported in the Safety Sheet supplied by the manufacturer with reference to the relevant CAS number (Chemical Abstract Service).

An optional Back-flush system is available. Back-flushing allows to eliminate during the cleaning phase the heavy part of the sample, which are not relevant for

the analysis. Refer to paragraph *PTV Back-flush Operation* on page 195 and to the *Enabling Back-flush* operating sequence on page 207 for details.

Pneumatics

PTV can be equipped with DPFC or non-DPFC modules.

Syringe

A 5-250 µL syringe with a 51 mm, conical-tipped needle is normally used to operate with PTV injector.

Septum

Standard Septum

You should always use good quality septa, such as the BTO septa supplied with the TRACE GC. Such septa resist deformation, have longer life expectancy, and have a low bleed level, even at high temperatures.

Microseal™ Valve

PTV injector is compatible with Merlin Microseal™ High Pressure Valve instead of the standard septa.

NOTE To replace the standard septum with the Microseal™ Valve, the relevant installation kit is required.

High pressure capability allows operation from 15 to 700 kPa (2-100 psi). Microseal™ valve requires a 0.63 mm diameter (0.025-inch) blunt tip syringe.

Liners

The selection of the liner depends on the type of application and operating mode needed for your analysis. PTV liners can be glass or silcosteel (stainless steel covered internally with deactivated silica). Table 12-1 shows the PTV liner options.

Table 12-1. PTV Injector Liners

ID mm	OD mm	Length mm	Type and Application
2	2.75	120	Silcosteel deactivated liner, used for split and splitless injections
1.0	2.75	120	Silcosteel deactivated liner, used for splitless injection of samples with high molecular weight compounds
1.0	2.75	120	Silcosteel deactivated liner with a 0.6 mm ID restrictor, used when the PTV operates like an on-column injector (refer to *PTV On-Column Like Injection* on page 176)
2	2.75	120	Glass liner, used for split and splitless injections
1	2.75	120	Glass liner, used for splitless injection of samples with high molecular weight compounds
2	2.75	120	Deactivated liner with baffles, used to increase the volumes injectable with the 1 mm ID glass liner.
2	2.75	120	Liner with silica wool for PTV Large Volume injections
2	2.75	120	Glass Sinterized liner (without quartz wool) for PTV Large Volume injections.

PTV Injection Techniques

In programmed temperature mode, the sample enters the injector in cold conditions. It is rapidly heated to the programmed vaporizing temperature and transferred into the capillary column.
The syringe needle is never significantly heated because the initial temperature of the injector must be low enough to prevent the sample vaporization in the needle. Cold injection prevents the discrimination of substances with different boiling points due to distillation in the hot needle.

After injection, the sample vaporizes gradually. This prevents the steam cloud phenomenon common to split/splitless injectors. If large enough to exceed the liner volume, a steam cloud escapes through the septum purge line and the split gas line. This phenomenon can also occur if sample volumes are too large or if the initial injection temperature is set too high.

PTV On-Column Like Injection

The PTV injector can be used like similar on-column injector if equipped with a special liner which has a restrictor on top. Refer to Table 12-1. The restrictor functions as a 0.47 mm OD needle guide, allowing you to inject a sample directly into a wide-bore column or a pre-column. By keeping the injector temperature lower than the solvent boiling point, you can inject a liquid sample directly into the column or pre-column. After a short injection time (5–20 seconds), the injector heats with a programmed rate to reach the sample transfer temperature.

When using this technique, set the oven temperature below the solvent boiling point. Set the initial oven time to a value higher than the injection time and the sample transfer temperature time. You should choose the split mode and select the lowest possible split flow (10–15 mL/min) when using the PTV for this type of injection.

PTV Split Injection

During split injection the splitting valve is open. Only a portion of the sample enters the column. The remainder discharges through the splitting line.
The ratio between the split flow and the column flow defines the amount of sample that enters the chromatographic system. The split flow must be set to obtain the correct split ratio for the type of analysis required.

The initial temperature should be lower than the solvent boiling point. The final temperature should be suitable for vaporizing the component with the highest boiling point.

An example of temperature profile and timing of the valves in PTV Split mode is shown in Figure 12-2.

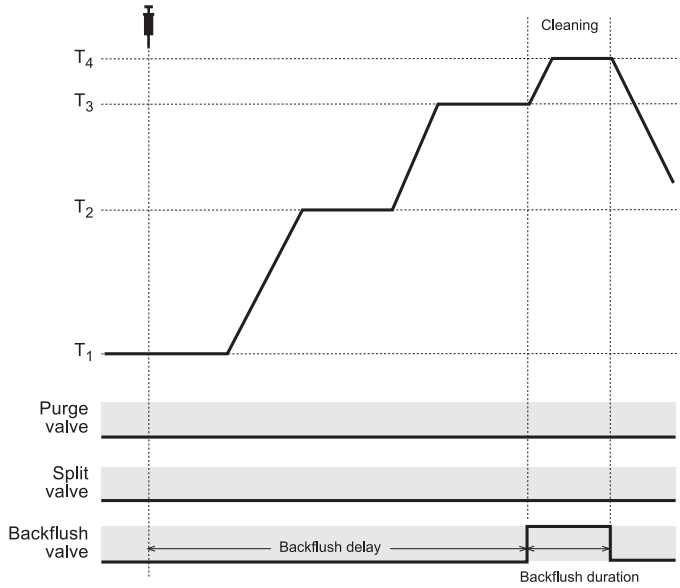

T1. Injection Temperature	T3.Sample Transfer Temperature
T2. Evaporation Temperature	T4. Cleaning Temperature

Figure 12-2. Temperature Profile and Timing in PTV Split Mode

PTV Splitless Injection

The splitless injection is used primarily to analyze compounds present in very low concentrations, especially in complex and relatively dirty matrices, such as substances containing non-volatile components. In splitless injection, the splitting valve remains closed during sample injection and transfer into the column.
The time during which the splitting valve remains closed is the *splitless time*. At the end of the sample transfer, the splitting valve opens again to purge the vaporization chamber of residual components, primarily solvent.

The splitless time controls the amount of sample entering the column. This time must end approximately 30–60 seconds after the injector has reached the final temperature. A constant septum purge can continuously flush the injector with a set purge flow throughout the analysis.

The low carrier gas flow during splitless injection causes sampling vapours to fill the vaporization chamber. To avoid sample loss, select an adequate liner, proper temperature conditions, and proper flow conditions.

An example of temperature profile and timing of the valves in PTV Splitless mode is shown in Figure 12-3.

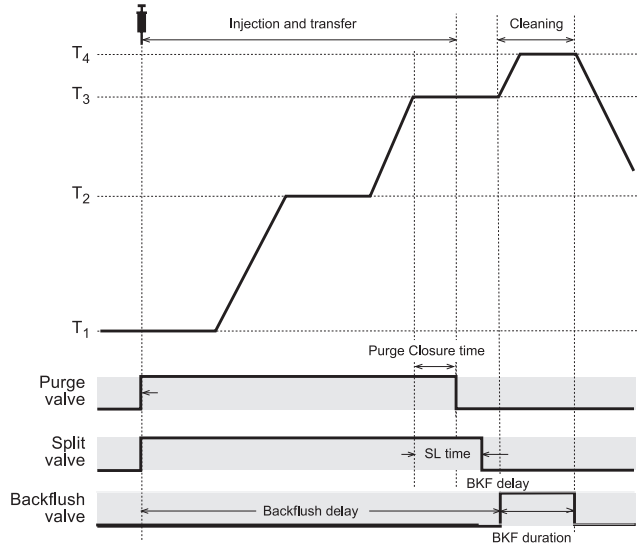

T1. Injection Temperature	T3.Sample Transfer Temperature
T2. Evaporation Temperature	T4. Cleaning Temperature

Figure 12-3. Temperature Profile and Timing in PTV Splitless Mode

PTV Solvent Split and Large Volume Injections

When your GC, with DPFC control, is configured for a solvent valve, the PTV Solvent Split operating mode will be replaced with the PTV Large Volume operating mode. For details refer to *PTV Injector Menus* on page 182.

PTV Solvent Split Injection

This technique eliminates the solvent before the sample enters the column. It is used mainly for normal injection volumes if the solvent or derivatizing reagents must be eliminated.

An example of temperature profile and timing of the valves in PTV Solvent Split mode is shown in Figure 12-4.

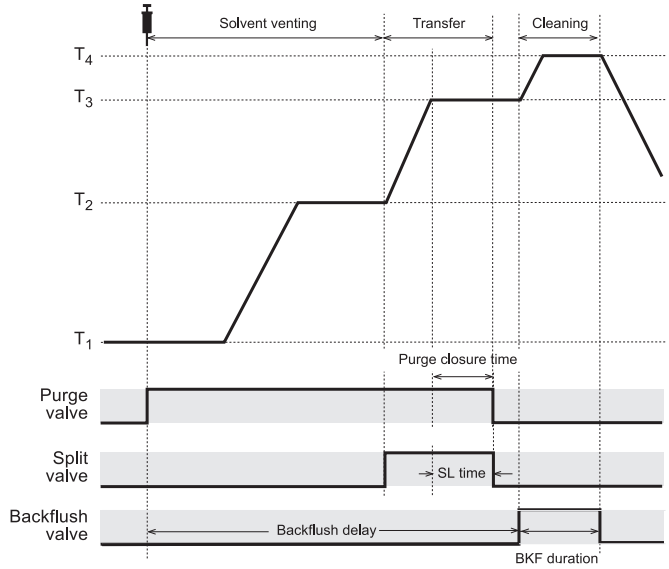

T1. Injection Temperature	T3.Sample Transfer Temperature
T2. Evaporation Temperature	T4. Cleaning Temperature

Figure 12-4. Temperature Profile and Timing in PTV Solvent Split Mode

PTV Large Volume Injection

PTV Large Volume injections (PTVLVI) allow large volume injections when the sample components are less volatile than the solvent. In order to operate in the PTVLVI mode, the injector must have a heated solvent split valve installed and configured. Large Volume requires the use of a liner of 2-mm ID with silica wool or other packing material to retain the solvent during injection or a glass sinterized liner. The liner is provided in the PTVLVI kit. If your GC has been configured with a solvent valve, the **`INLET (PTV)`** menu contains the parameters for large volume injection. The PTV injector for Large Volume injections is schematically represented in Figure 12-5.

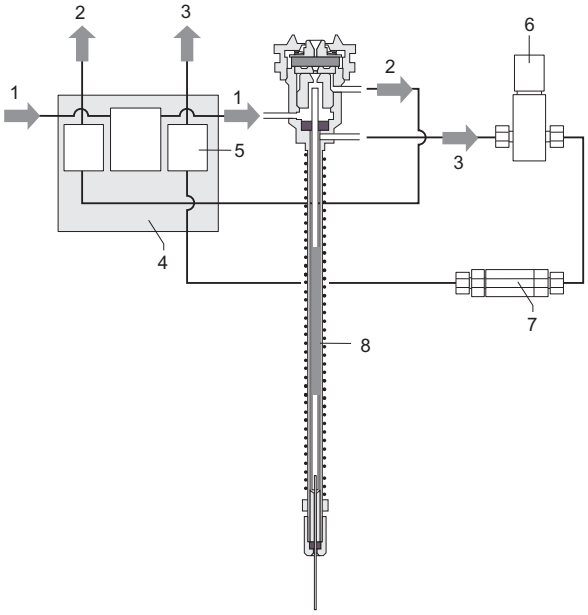

1. Carrier Gas Inlet	5. Split Valve Bypass
2. Septum Purge Line	6. Heated Solvent Split Valve
3. Split Line	7. Filter
4. DPFC Module	8. Liner with silica wool

Figure 12-5. PTV Injector for Large Volume Injections

For further details refer to *Large Volume Injections Using PTV* on page 197.

CT Split Injection

This mode is used to execute split injections at a constant temperature. The split and purge valves remain open throughout the run.
Figure 12-6 shows the temperature profile and the timing of the valves.

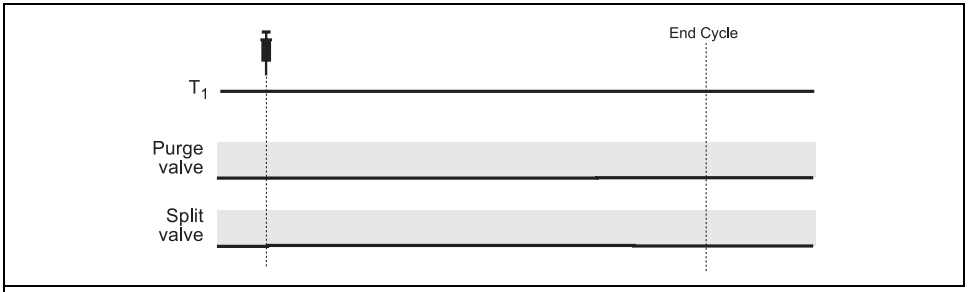

T1. Injection Temperature

Figure 12-6. Timings of the Valves in CT Split Mode

CT Splitless Injection

This mode is use to execute splitless injections at a constant temperature.
The split and purge valves are closed during the **Prep Run** phase and remain closed after the injection for the programmed duration.
Figure 12-7 shows the temperature profile and the timing of the valves.

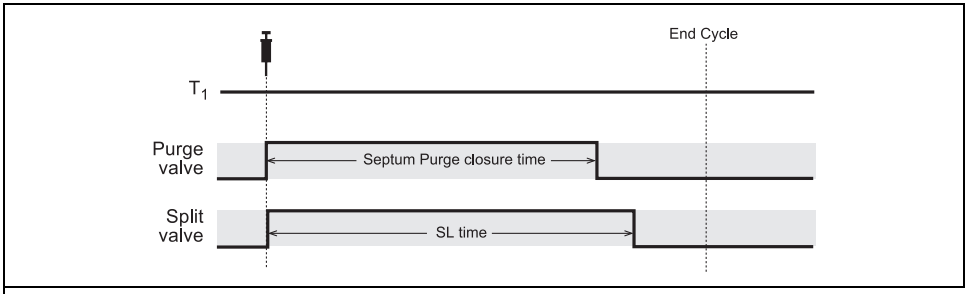

T1. Injection Temperature

Figure 12-7. Timings of the Valves in CT Splitless Mode

CT Surge Splitless Injection

In CT surge splitless mode, a carrier gas pressure surge activates during the injection phase for a programmed time. This surge accelerates the transfer process of the substances from the injector to the column. The pressure pulse starts in the **Prep Run** phase and lasts until the end of the programmed surge duration. The split and purge valves close during the **Prep Run** phase and remain closed after injection for the programmed duration.

PTV Injector Menus

The **`INLET (PTV)`** menu includes the operating parameters for the programmed temperature vaporizing injector. The parameters you can edit depend on the operating mode and temperature mode chosen, and on the type of gas control modules (DPFC or non-DPFC) installed in your GC.

- There are three programmed temperature operating modes: PTV split, PTV splitless, and PTV solvent split.
  - In the programmed temperature modes, you can program the injector temperature to change during an injection. The value you set in the `Temp` parameter acts as a standby temperature.
  - If your GC, equipped with DPFC module, has been configured for a solvent valve, the PTV solvent split operating mode will be replaced with the PTV large volume operating mode.
  - If a DPFC module is present in the instrument, it is also possible to program different venting or cleaning flow values during the different phases.
- There are three constant temperature (CT) operating modes:
  - CT split
  - CT splitless
  - CT splitless with surge.

  In the constant temperature modes, the injector operates at the temperature set in `Temp` throughout the analytical run.

Press **RIGHT INLET** to display the **`RIGHT INLET (PTV)`** menu. The PTV injector is usually on the right.

```
     RIGHT INLET (PTV)
Temp              250  250
Pressure       10.6   10.6
Mode:               split<
```

The `Mode:` menu item displays the current operating mode. Press **MODE/TYPE** to open the **`INLET MODE`** submenu.

```
    RIGHT INLET MODE
* PTV split            <
  PTV splitless
  PTV solvent split
  CT split
  CT splitless
  CT splitless w/srg
```

NOTE

If your GC, with DPFC control, has been configured for a solvent valve, the `PTV solvent split` operating mode will be replaced with the `PTV large volume` operating mode.

CT Splitless w/srg menu will only be displayed if your GC is configured for DPFC. Refer to Table 12-4 on page 186.

Scroll to the mode you want to use and press **ENTER** to confirm the selection. An asterisk appears beside the selected operating mode. Tables 12-2 through 12-7 explain the ranges and functions of the parameters in the **`RIGHT INLET`** menus for each operating mode. The items in the inlet menus vary depending on the operating mode you select.

Table 12-2. Inlet (PTV) Menu for Split Mode in Programmed and Constant Temperature

Menu	Range	Comments
RIGHT INLET (PTV)		This line is the menu title bar.
Temp	0–400 ºC, –50–400 ºC with cryo enabled	This line shows the base injector temperature. Press **ON** to turn on the heater and display the actual and setpoint values. Press **OFF** to turn off the heater.
Pressure[2]	On/Off, 2–250 kPa or 7–700 kPa[1]	This line shows the pressure. Press **ON** turn on the flow and to display the actual and setpoint values. Press **OFF** or **0** to turn off the inlet flows and display the actual value.
Mode		This parameter displays the injection operating mode selected. Press **ENTER** to open the **INLET MODE** selection menu.
Total flow[2]	Not editable	This line shows the total gas flow consumption, which equals the sum of the column flow, split flow (or gas saver flow), and septum purge flow. This value is not editable.
Split flow[2]	On/Off, 0, 10–500 mL/min	This line shows the split flow. Press **ON** to turn on the split flow and display the actual and setpoint values. Press **OFF** or **0** to turn off the split flow.
Split ratio[2]	1–5000	This line displays the actual split ratio value, which is the ratio between the split flow and the column flow.
Inject phase menu	Refer to Table 12-7.	Press **MODE/TYPE** to enter the **INJECT PHASE MENU**. This line appears only in a programmed temperature mode.

1. 0.3–36 psi, 0.02–2.5 bar; 1.00–100 psi, 0.07–7.00 bar.
2. This line is displayed only if your GC has DPFC control.

Table 12-3. Inlet (PTV) Menu for Splitless Mode in Constant and Programmed Temperature

Menu	Range	Comments
`RIGHT INLET (PTV)`		This line is the menu title bar.
`Temp`	On/Off, 0–400 ºC, –50–400 ºC with cryo enabled	This line shows the base injector temperature. Press **ON** to turn on the heater and display the actual and setpoint values. Press **OFF** to turn off the heater and display the actual value.
`Pressure`[2]	On/Off, 2–250 kPa or 7–700 kPa[1]	This line shows the pressure. Press **ON** to turn on the flow and display the actual and setpoint values. Press **OFF** or **0**, to turn off the inlet flows and display the actual value.
`Mode:`		This line displays the selected operating mode.
`Total flow`[2]	Not editable	This line shows the total gas flow consumption, which equals of the sum of the column flow, split flow (or gas saver flow), and septum purge flow.
`Split flow`[2]	On/Off, 0, 10–500 mL/min	This line shows the split flow. Press **ON** to turn on the split flow and turn on the actual and setpoint values. Press **OFF** or **0** to turn off the split flow.
`Splitless time`[2]	0–999.99 min	This line shows the splitless time, which is the duration of split valve closure.
`Const sept purge?`	Yes/No	This line shows the constant septum purge flow. Press **YES** to activate the constant septum purge and continuously flush the septum with a fixed purge flow of 5 mL/min for helium and nitrogen or 10 mL/min for hydrogen.
`Stop purge for?`	0–999.99 min, ∞	This line appears only when `Constant sept purge?` is set to `No`.
`Inject phase menu`	Refer to Table 12-7.	Press **MODE/TYPE** to enter the **`INJECT PHASE MENU`**. This line appears only in a programmed temperature mode.

1. 0.3–36 psi, 0.02–2.5 bar; 1.00–100 psi, 0.07–7.00 bar.
2. This line is displayed only if your GC has DPFC control.

Table 12-4. Inlet (PTV) Menu for Splitless with Surge in Constant Temperature Mode[2]

Menu	Range	Comments
`RIGHT INLET (PTV)`		This line is the menu title bar.
`Temp`	0–400 ºC, –50–400 ºC with cryo enabled	This line shows the base injector temperature. Press **ON** to turn on the heater and display the actual and setpoint values. Press **OFF** to turn off the heater and display the actual value.
`Pressure`	On/Off, 2–250 kPa or 7–700 kPa[1]	This line shows the pressure. Press **ON** to turn on the gas flow and display the actual and setpoint values. Press **OFF** or **0**, to turn off the inlet flows and display the actual value.
`Mode:`		This line displays the selected operating mode.
`Total flow`	Not editable	This line shows the total gas flow consumption, which equals the sum of the column flow, split flow (or gas saver flow), and septum purge flow.
`Split flow`	On/Off, 0, 10–500 mL/min	This line shows the split flow. Press **ON** to turn on the split flow and display the actual and setpoint values. Press **OFF** or **0** to turn off the split flow.
`Splitless time`	0–999.99 min	This line shows the splitless time, which is the duration of split valve closure.
`Surge pressure`	2–250 kPa or 7–700 kPa[1]	This line allows you to program the surge pressure.
`Surge duration`	0–999.99 min	This line displays the duration of the surge pressure after run start.
`Const sept purge?`	Yes/No	This line shows the constant septum purge flow. Press **YES** to activate the constant septum purge and continuously flush the septum with a fixed purge flow of 5 mL/min for helium and nitrogen or 10 mL/min for hydrogen.
`Stop purge for?`	0–999.99 min, ∞	This line appears only when `Constant sept purge?` is set to `No`.

Table 12-4. Inlet (PTV) Menu for Splitless with Surge in Constant Temperature Mode[2] (Continued)

Menu	Range	Comments
`Inject phase menu`	Refer to Table 12-7.	Press **MODE/TYPE** to enter the **`INJECT PHASE MENU`**. This line appears only in a programmed temperature mode.

1. 0.3–36 psi, 0.02–2.5 bar; 1.00–100 psi, 0.07–7.00 bar.
2. This menu will only be displayed if your GC is configured for DPFC.

Table 12-5. Inlet (PTV) Menu for Solvent Split Mode

Menu	Range	Comments
`RIGHT INLET (PTV)`		This line is the menu title bar.
`Temp`	0–400 ºC, –50–400 ºC with cryo enabled	This line shows the base injector temperature. Press **ON** to turn on the heater and display the actual and setpoint values. Press **OFF** to turn off the heater and display the actual value.
`Pressure`[2]	On/Off, 2–250 kPa or 7–700 kPa[1]	This line shows the pressure. Press **ON** to turn on the gas flow and display the actual and setpoint values. Press **OFF** or **0** to turn off the inlet flows and display the actual value.
`Mode`		This line displays the selected operating mode.
`Total flow`[2]	Not editable	This line shows the total gas flow consumption, which equals of the sum of the column flow, split flow (or gas saver flow), and septum purge flow.
`Split flow`[2]	On/Off, 0, 10–500 mL/min	This line shows the split flow. Press **ON** to turn on the split flow and display the actual and setpoint values. Press **OFF** or **0** to turn off the split flow.
`Splitless time`[2]	0–999.99 min	This line shows the splitless time, which is the duration of split valve closure.
`Const sept purge?`	Yes/No	This line shows the constant septum purge flow. Press **YES** to activate the constant septum purge and continuously flush the septum with a fixed purge flow of 5 mL/min for helium and nitrogen or 10 mL/min for hydrogen.

Table 12-5. Inlet (PTV) Menu for Solvent Split Mode (Continued)

Menu	Range	Comments
`Stop purge for?`	0–999.99 min, ∞	This line appears only when `Constant sept purge?` is set to `No`.
`Inject phase menu`	Refer to Table 12-7.	Press **MODE/TYPE** to enter the **`INJECT PHASE MENU`**.

1. 0.3–36 psi, 0.02–2.5 bar; 1.00–100 psi, 0.07–7.00 bar.
2. This line is displayed only if your GC is configured for DPFC.

In order to operate in large volume mode, your GC must be configured for DPFC operation and the PTV must have a solvent valve. All operating mode menus will contain the `Solvent vlv` temperature parameter if a solvent valve has been installed and configured. Table 12-6 shows a typical PTV Large Volume mode menu.

Table 12-6. Inlet (PTV) Menu for Large Volume Mode [2]

Menu	Range	Comments
`RIGHT INLET (PTV)`		This line is the menu title bar.
`Temp`	0–400 ºC, –50–400 ºC with cryo enabled	This line shows the base injector temperature. Press **ON** to turn on the heater and display the actual and setpoint values. Press **OFF** to turn off the heater and display the actual value.
`Pressure`[2]	On/Off, 2–250 kPa or 7–700 kPa[1]	This line shows the pressure. Press **ON** to turn on the inlet flows and display the actual and setpoint values. Press **OFF** or **0** to turn off the inlet flows and display the actual value.
`Mode:`		This line displays the selected operating mode.
`Total flow`[2]	Not editable	This line shows the total gas flow consumption, which equals of the sum of the column flow, split flow (or gas saver flow), and septum purge flow.
`Split flow`[2]	On/Off, 0, 10–500 mL/min	This line shows the split flow. Press **ON** to turn on the split flow and display the actual and setpoint values. Press **OFF** or **0** to turn off the split flow.

Table 12-6. Inlet (PTV) Menu for Large Volume Mode [2] (Continued)

Menu	Range	Comments
`Splitless time`	0–999.99 min	This line shows the splitless time, which is the duration of split valve closure.
`Solvent vlv`	0–160 °C	This line displays the solvent valve temperature.
`Const sept purge?`	Yes/No	This line shows the constant septum purge flow. Press **YES** to activate the constant septum purge and continuously flush the septum with a fixed purge flow of 5 mL/min for helium and nitrogen or 10 mL/min for hydrogen.
`Stop purge for?`	0–999.99 min, ∞	This line appears only when `Constant sept purge?` is set to `No`.
`Inject phase menu`	Refer to Table 12-7.	Press **MODE/TYPE** to enter the `Inject Phase` menu.

1. 0.3–36 psi, 0.02–2.5 bar; 1.00–100 psi, 0.07–7.00 bar.
2. This menu will only be displayed if your GC is configured for DPFC

Table 12-7. Inject Phase Menu for Split, Splitless, Solvent Split, and Large Volume Modes

Menu	Range	Comments
`INJECT PHASE`		This line is the menu title bar.
`Ramped pressure?`[5]	Yes/No	Press **YES** to open the pressure ramp parameters.
`Inject pres`[5]	On/Off, 2–250 kPa or 7–700 kPa[1]	This parameter defines the pressure value during the injection phase.
`Inject temp`	0–400 ºC, –50–400 ºC with cryo enabled	This parameter defines the injector temperature during injection.
`Inject time`	0.00–999.99 min	This parameter defines the time to maintain the temperature during and after the injection.

Table 12-7. Inject Phase Menu for Split, Splitless, Solvent Split, and Large Volume Modes (Continued)

Menu	Range	Comments
`Vent flow`[6]	10–500 mL/min	This line shows the vent flow during the injection and evaporation phases. It discharges the solvent or the non-retained compounds during the large volume or solvent split phase. The vent flow setpoint must be compatible with the available pressure set.
`Evap pres`[2-5]	On/Off, 2–250 kPa or 7–700 kPa[1]	This parameter defines the pressure used during the solvent evaporation phase. The pressure is applied at the beginning of the evaporation temperature ramp.
`Evap ramp`[2]	0.1–14.5 ºC/s in 0.1 ºC/s increments	This parameter defines the ramp rate to reach the programmed solvent evaporation temperature.
`Evap temp`[2]	0–400 ºC, –50–400 ºC with cryo enabled	This parameter defines the solvent evaporation temperature.
`Evap time`[2]	0.00–999.99 min	This parameter defines the time the programmed solvent evaporation temperature must be maintained.
`Transfer pres`[5]	On/Off, 2–250 kPa or 7–700 kPa[1]	This parameter defines the pressure used during the sample transfer phase. This pressure is applied at the beginning of the transfer temperature ramp.
`Transfer ramp`	0.1–14.5 ºC/s in 0.1 ºC/s increments	This parameter defines the rate of the temperature ramp to reach the sample transfer temperature.
`Transfer temp`	0–400 ºC, –50–400 ºC with cryo enabled	This parameter defines the temperature at which the sample transfers into the column.
`Transfer time`	0.00–999.99	This parameter defines the time the programmed sample transfer temperature must be maintained.
`Clean ramp`[3]	0.1–14.5 ºC/s in 0.1 ºC/s increments	This parameter defines the ramp rate to reach the programmed injector cleaning temperature.

Table 12-7. Inject Phase Menu for Split, Splitless, Solvent Split, and Large Volume Modes (Continued)

Menu	Range	Comments
`Clean temp`[3]	0–400 ºC, –50–400 ºC with cryo enabled	This parameter defines the injector temperature during the cleaning phase.
`Clean time`[3]	0.00–999.99 min	This parameter defines the time the programmed sample transfer temperature must be maintained.
`Clean flow`[4]	10–500 mL/min	This parameter may be used to increase the flow during the cleaning phase. The clean flow setpoint must be compatible with the pressure set.

1. 0.3–36 psi, 0.02–2.5 bar; 1.00–100 psi, 0.07–7.00 bar.
2. This parameter appears only when the `Evaporation?` option has been configured in the **`PTV PHASE EVENTS`** menu. Refer to the *Configuring Evaporation Event* operating sequence on page 203 for more information.
3. This parameter appears only when the `Cleaning?` option has been configured in the **`PTV PHASE EVENTS`** menu. Refer to the *Configuring Cleaning Event* operating sequence on page 204 for more information.
4. An optional Back Flushing (BKF) system is available. If configured, it will be active during the injection and evaporation phases and also in the cleaning phase. Refer to *Enabling Back-flush* operating sequence on page page 207 for details.
5. This line is displayed only if your GC is configured for DPFC.
6. This line is displayed only when PTV Large Volume or PTV Solvent Split operating modes are used.

PTV Cryogenic Operation

An optional cryogenic system allows you to operate the PTV below ambient temperature using liquid nitrogen or liquid carbon dioxide as the coolant.

- liquid CO_2 allows PTV temperature down to -30 ºC.
- liquid N_2 allows PTV temperature down to -50 °C.

You can set the cryo system to operate during the **Prep Run** or **Post Run** phase.

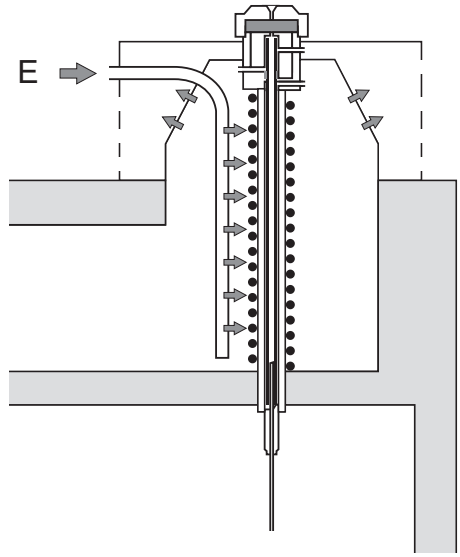

E. Flow of Vapors of Liquid Nitrogen

Figure 12-8. Liquid Nitrogen Cooling System

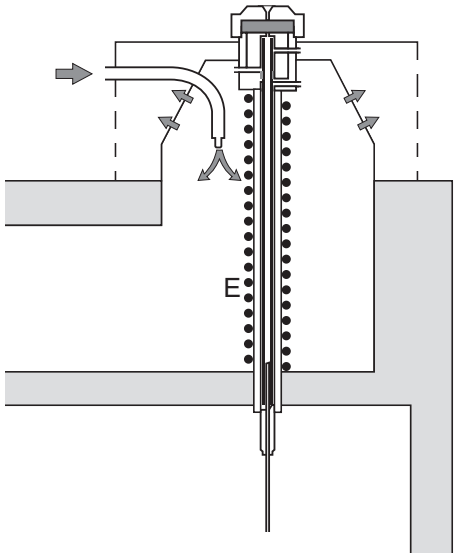

E. Flow of Carbon Dioxide

Figure 12-9. Carbon Dioxide Cooling System

WARNING! High pressures and extremely low temperatures make liquid N_2 a hazardous material. High concentrations of N_2 in the air can cause an asphyxiation hazard. To avoid injury, always follow the safety precautions and delivery system design recommended by your gas supplier.

High pressures and extremely low temperatures make pressurized liquid CO_2 a hazardous material. High concentrations of CO_2 are dangerous. To avoid injury, always follow the safety precautions and delivery system design recommended by your gas supplier.

If your PTV has a cryogenic system, the `CONFIGURE INLET` menu contains the cryogenic configuration parameters. Each time you wish to use the cryogenic cooling option, you must enable it in the `CONFIGURE INLET` menu.

Without a cryogenic system, fans will cool the PTV to ambient temperature. With a PTV cryogenic system installed, you can specify a temperature at which the

cryogenic system switches on to cool the PTV. This temperature is the *cryo switch temp*.

Cryo Timeout

The *cryo timeout* feature allows you to limit the time the cryo system will run without receiving an injection signal. This serves two purposes:

- It conserves the cryogenic coolant.
- It turns off the cryo system if the setpoint temperature cannot be reached due to a lack of coolant.

After setting `Enable cryogenic?` to `Yes` in the **`CONFIGURE INLET`** menu, the cryo system begins automatically if you have turned on the `Auto prep run` feature the **`CONFIGURE OVEN`** menu. If `Auto prep run` is turned off, the cryo system begins when you press **PREP RUN**.

The cryo timeout will turn off the cryo system and reset the `Enable cryogenic?` parameter to `No` if the GC does not receive an injection signal by the time specified in the `Cryo timeout` parameter.

If this happens, you must re-enable the cryo system in the **`CONFIGURE INLET`** menu if you wish to perform an analysis using the PTV cryogenic system.

Refer to the *Configuring Cryogenic Operation* operating sequence on page 205 for instructions on using the cryo system.

PTV Back-flush Operation

With the implementation of the back-flush kit the TRACE GC equipped with the PTV injector, will be able to perform operations with the following advantages:

- Eliminate during the cleaning phase the heavy part of the sample, which are not relevant for the analysis. This will strongly reduce the analysis time with any analytical set-up and with many samples.
  This step is important when performing analysis of volatile compounds in a relatively low volatile mixture.
- Avoid solvent introduction into the column when performing a large volume injection. This is particularly important with MS applications.
- Isolate the injector, while keeping the carrier into the column, when changing the liner and the column is connected to a MS or to a solvent sensitive GC detector.
- Perform precise cuts of the chromatogram, installing a selected coated pre-column, so that only a part of the sample is transferred into the column for the analysis.

The back-flush option will also permit the use of very narrow bore column without significant peak broadering effect. In this way, for example, it is possible to use a thick film of stationary phase and to perform a precise cut of the components that are not of interest, so that only the volatile compounds are analyzed with narrow bore capillary columns. The rest of the sample is eliminated through the injector and the oven temperature does not need to be increased to elevated value.

NOTE To install and configure the Back Flush option refer to the Back Flush System for PTV Injector Installation Guide.

The back-flush kit is schematically shown in Figure 12-10.

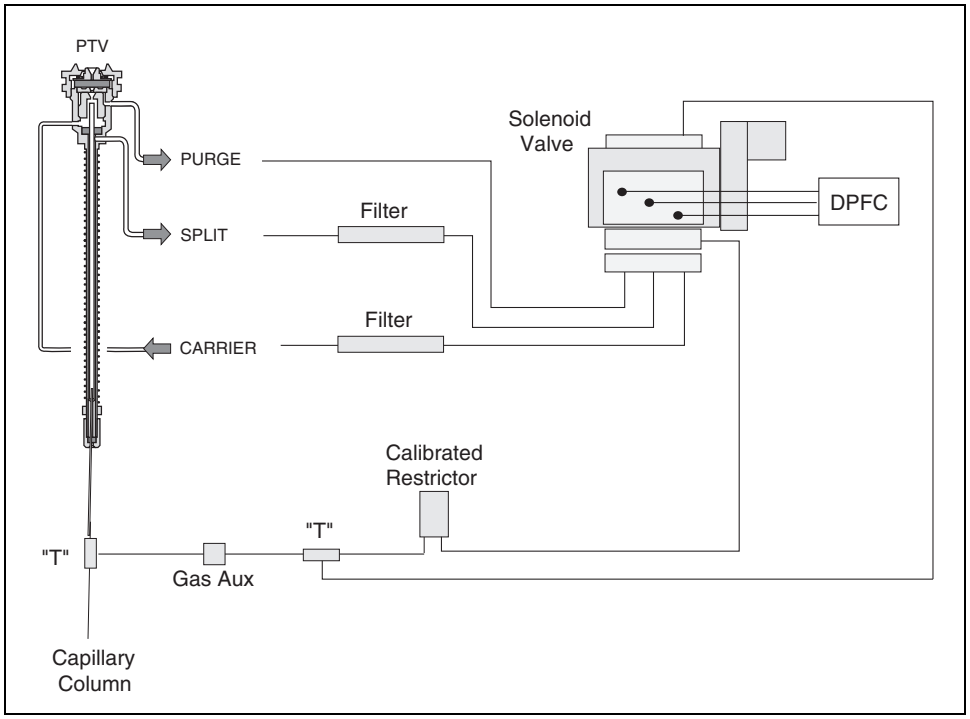

Figure 12-10. Back-flush Kit for PTV Injector

Using Back Flushing

Back flushing may be applied only when the BEST PTV injector is used in the PTV operating modes such as PTV Split, PTV Splitless, PTV Solvent Split and PTV Large Volume

NOTE Back-flush may be used during a large volume injection to avoid the solvent is entering into the column during venting phase.

When enabled, the Back-flush is ON (solenoid valve not energized) during Injection Phase, Evaporation Phase and Cleaning Phase.

Large Volume Injections Using PTV

Large volume injection through a PTV can be done in different modes:

- **Mode 1***: At once*
  when the sample is introduced at a relatively high speed (e.g. over 10 µl/sec).
- **Mode 2***: Speed controlled injection*
  when the sample is introduced at a rate that is theoretically equal to the evaporation rate.
- **Mode 3***: Multiple injection*
  when a small volume of sample is introduced several times with a delay between the injections, each injection of about 5-10 µl.

With the BEST PTV, **mode 1** or **2** are used.

Mode 1 (At once)

It requires that the volume to be injected is not too large (normally below 80 µl) when using a 2 mm liner with silica wool.
(It is possible to inject also in Splitless mode with an empty liner, if the volume is below 10 µl).

- The **injection speed** must be relatively high (over 10 µl/sec) manually or with the autosampler.
- The **initial temperature** of the PTV must be normally kept (10-20 °C) below the boiling point of the solvent, corrected for the pressure in the injector. The temperature can be increased, to speed up the evaporation, but this can increase the loss of volatile compounds.
- The **split flow** must be in the range of 100-200 ml/min
- The **injection/evaporation time** depends on: the amount of solvent, the type of solvent and the amount of solvent that must remain in the liner before the injector is heated at the final temperature.
- The **final temperature** is selected according to the volatility of compounds to be transferred.

- The **oven temperature** must be selected according to the needed separation and to reduce the flooding into the column. Normally the boiling point of the solvent is a good starting point.

A certain amount of solvent in the liner must be left to increase the recovery for both the relatively volatile fraction (compounds at least with a boiling point 120 -150 °C higher then the solvent) and the rest of the sample. This amount should not flood significantly the column and must not create problems to the detector in use.
To reduce the risk of column flooding, an empty deactivated precolumn (1-2 m) can be used in front of the coated column, unless Back-flush option is used.

Mode 2 (Speed Controlled Injection)

This is the injection mode that is normally used with the autosampler (AS 2000).

The sample is injected at a ***controlled speed*** and this is normally in the range of 2-8 µl/sec according to the temperature/pressure and split flow in use.
The liquid sample is injected at a slow speed so that during the injection the majority of the solvent is eliminated trough the split exit. The evaporation speed is influenced by the temperature and flow but also on the type of packing present in the liner.
The injection mode permits the introduction of large amount of solvent (100-500 µl) because the solvent is not significantly stored in the liner and so the injectable volumes can be vary.

As for the ***At Once*** mode a certain amount of solvent must remain in the liner during the injection and after the injection before closing the split valve, to reduce the volatiles loss.
Conditions that can be used to start the tuning are:

- Temperature close to the pressure corrected solvent boiling point (usually below that temperature).
- Split flow 100-150 ml/min.
- Injection speed 2-5 µl/sec.
- Injection/evaporation time 0.5-2 minutes after the injection end.
- Splitless time 0.5-1.5 min.

- Oven temperature slightly below the pressure corrected boiling point temperature of the solvent used.

The injection speed and the delay time after the injection are modified according to the chromatogram shape and peaks size, in comparison with a concentrated solution injected in PTV splitless mode.

The liner used is normally 2 mm ID with deactivated silica wool. If catalytic sensitive compounds have to be analyzed, a sinterized glass liner must be used. In this case the speed of injection and the maximum injection volume must be reduced (2-3 µls, 150 µl max) and a special syringe have to be installed in the autosampler.

CAUTION **When operating in Large Volume, program the closure of the septum purge during the back flushing phase.**
In the relevant PTV Control Table, scroll to `Const sept purge?` **and press OFF/NO to deactivate constant septum purge flow. Scroll to** `Stop purge` **and set the duration.**

Temperature Profile and Timing

An example of temperature profile and timing in PTV large volume with backflush is shown in Figure 12-11 on page 200

The **purge valve** is closed at **PREP RUN** and remains closed for the time elapsed from the end of the *transfer phase*.

The **split valve** is closed at the end of evaporation phase and remain closed for the time programmed elapsed from the end of the *transfer ramp*.

The **back flushing valve** is set `OFF` at **PREP RUN** and `ON` just before the transfer ramp, then is `OFF` at the beginning of the *clean ramp* and is `ON` at the end of *clean time*.

The **flow** through the split line is programmed to be changed during the *solvent vent phase* (set point 1) and during the *cleaning phase* (set point 2).

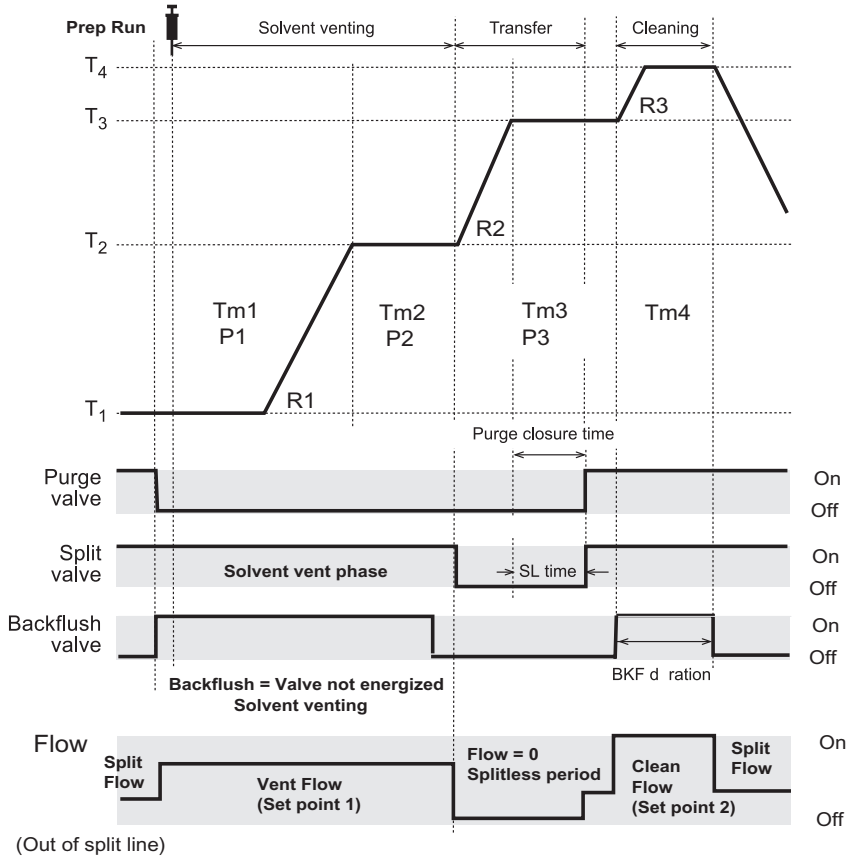

T1. Injection Temperature	T3. Sample Transfer Temperature
T2. Evaporation Temperature	T4. Cleaning Temperature
Tm1. Injection Time	Tm2. Solvent Evaporation Time
Tm3. Transfer Time	Tm4. Cleaning Time
P1. Injection Pressure	P2. Evaporation Pressure
P3. Transfer Pressure	R1. Transfer Ramp
R2. Transfer Ramp	R3. Cleaning Ramp

Figure 12-11. Temperature Profile and Timing in PTV Large Volume

Example of Analysis

Figure 12-12, shown an example of PTV Large Volume injection of a hydrocarbons mixture (100 µl) performed in speed controlled mode. The analytical condition are reported in the table below the Figure.

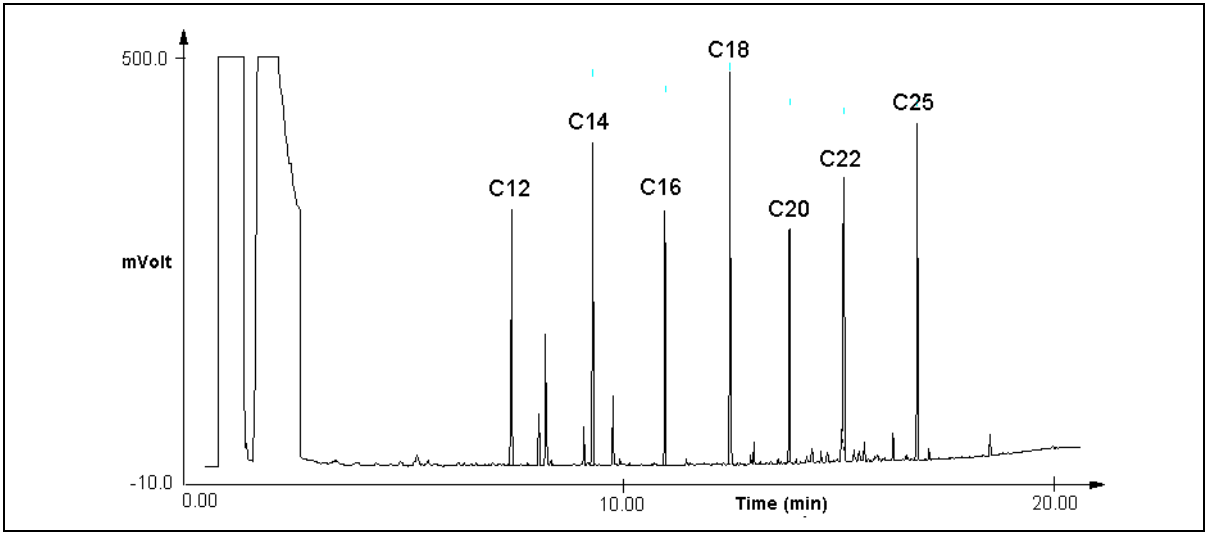

Figure 12-12. Example of PTV Large Volume Injection.

Analytical Conditions			
Sample	Hydrocarbons mixture (200 pg/µl) of C12 to C25 diluted in pentane		
Column	SE 52; 15 m length; 0.25 mm ID; 0.25 µm film thickness		
Carrier Gas	Helium; 1.2 ml/min	**Oven Parameters**	
Flow Mode	Constant Pressure	Initial Temperature 40 °C	Initial Time 2.00 min
Initial Press.	50 kPa	Final Temperature 310 °C	Hold Time 2.00 min
Liner	2 mm ID with Silica Wool	Rate 15.0 °C/min	
Injection Parameters (AS 2000)	Injection Volume 100 µl	**PTV Parameters**	
	Injection Speed 5µl/s	Base Temp. 30 °C	Splitless Time 1.00 min
Detector	FID	Solvent Valve Temp. 120 °C	Inject Time 0.3 min
Det. Base Temp.	320 °C	Vent Flow 100 ml/min	Transfer Rate 10 °C/sec
Det.Gas ml/min	H_2 35; Air 350; M 30	Transfer Temperature 275 °C	Transfer Time 2.0 min

OPERATING SEQUENCE

Installing a Liner and Septum

Materials required:

- liner
- septum
- spacer
- tweezers
- graphite seal
- screwdriver

WARNING! The injector fittings may be hot.
This sequence must be performed with the injector at working temperature

1. Choose the correct liner for your application (see Table 12-1 on page 175). Slide a graphite seal onto the liner while gently turning the seal. Push it to 8–10 mm from the top of the liner.

CAUTION Be careful not to break the graphite or allow graphite to enter in the liner.

2. Holding the top of the liner with tweezers, lower it into the injector. The liner should rest on the spacer at the bottom of the injector.

3. Insert the liner cap and secure it with the screwdriver. The liner cap must be screwed down tight enough to ensure a good seal between the liner and the injector body.

4. Place the septum support in the injector. The septum support must lie flush with the top of the injector. If not, the liner cap may not be tight enough.

5. Use tweezers to pick up the septum. Place the septum into the septum holder, then place the holder on top of the complete injector assembly.

CAUTION Use tweezers to pick up the septum to avoid contaminating it.

6. Gently finger-tighten the septum cap onto the injector assembly to hold the septum in place.

WARNING! Do not overtighten the septum cap. The septum will deform and may be difficult to penetrate with the syringe needle.

OPERATING SEQUENCE

Configuring Evaporation Event

Before you begin this sequence, configure the injector parameters.

1. Press **CONFIG** to enter the **CONFIGURE** menu.

2. Scroll to the inlet where your PTV injector is installed and press **ENTER**. The following menu appears:

```
     CONFIG RIGHT INLET

PTV phase events        <
Enable cryo             N
```

NOTE The `Enable cryo` parameter will be displayed only if your GC has a cryogenic system installed.

3. Scroll to `PTV phase events` and press **ENTER** to open the following menu:

```
      PTV PHASE EVENTS

Evaporation?           N<
Cleaning?              N
```

4. Scroll to `Evaporation?` and press **YES**. The relevant parameters will be displayed in the **INJECT PHASE** menu.

OPERATING SEQUENCE

Configuring Cleaning Event

1. Press **CONFIG** to enter the **CONFIGURE** menu.
2. Scroll to the inlet where your PTV injector is installed and press **ENTER** to open the following menu:

```
     CONFIG RIGHT INLET
PTV phase events        <
Enable cryo             N
```

NOTE The `Enable cryo` parameter will be displayed only if your GC has a cryogenic system installed.

3. Scroll to `PTV phase events` and press **ENTER** to open the following menu:

```
      PTV PHASE EVENTS
Evaporation?           N<
Cleaning?              N
```

4. Scroll to `Cleaning?` and press **YES**. The relevant parameters will be displayed in the **PTV PHASE** menu.

NOTE An optional back flushing valve system prevents sample components from entering the analytical column during the cleaning phase. If installed, the back flushing valve will be active during the whole cleaning cycle.

OPERATING SEQUENCE

Configuring Cryogenic Operation

WARNING! High pressures and extremely low temperatures make liquid N_2 a hazardous material. High concentrations of N_2 in the air can cause an asphyxiation hazard. To avoid injury, always follow the safety precautions and delivery system design recommended by your gas supplier.

High pressures and extremely low temperatures make pressurized liquid CO_2 a hazardous material. High concentrations of CO_2 are dangerous. To avoid injury, always follow the safety precautions and delivery system design recommended by your gas supplier.

Use the following sequence to configure and enable the cryogenic system:

1. Press **CONFIG** to enter the `CONFIGURE` menu.
2. Scroll to the inlet where your PTV injector is installed and press **ENTER** to open the following menu:

```
     CONFIG RIGHT INLET
Enable cryogenic          Y<
Cryo Switch temp         50
Cryo timeout           0.10
Cool at            Prep run
```

3. Scroll to `Enable cryo` and press **YES**.
4. Scroll to `Cryo Switch temp` and enter the temperature at which the cryo system begins to operate.
5. Scroll to `Cyro timeout` and enter the time after a run starts that the cryo system should shut down if the GC does not receive an injection signal. Refer to *Cryo Timeout* on page 194.

6. Scroll to `Cool at` and press **ON** to open the following menu:

```
      INLET CRYO MODE
* Cool at prep run
  Cool at post run
```

Scroll to the mode you wish to select and press **ENTER**. An asterisk appears beside the selected cooling mode.

a. Select `Cool at prep run` to cool the injector at the beginning of the analytical cycle. The sample injection starts when the initial injector temperature is reached.

b. Select `Cool at post run` to cool the injector in the **Post Run** phase, during which the GC resumes the initial analytical conditions (including oven temperature and injector temperature). This option can save time between analyses.

OPERATING SEQUENCE

Enabling Back-flush

Use the following sequence to configure and enable the bck-flush system:

1. Press **CONFIG** to enter the `CONFIGURE` menu.
2. Scroll to the inlet where your PTV injector is installed and press **ENTER** to open the following menu:

```
     CONFIG RIGHT INLET
PTV phase events
Enable cryo              N
Enable Back flush        Y <
```

3. Scroll with the **ARROW** key until the cursor points to `Enable back flush`. and set it `Y`.
4. Press **CLEAR** to return the main `CONFIGURE` menu.

IMPORTANT! **Back-flush may be manually activated On/Off through the `VALVES` menu (press VALVES). It is very useful when the liner replacement is required, particularly when a MS is used.**

During column evaluation the Back-flush is ON.
To perform column evaluation when Back-flush is not used, it must be disabled and the line in the GC oven must be sealed with a blind nut.

OPERATING SEQUENCE

Programming the PTV Split Mode

In PTV split mode, the split and purge valves remain open during an entire run.

Before you begin this sequence, do the following:

- Verify that a column is correctly installed, the correct liner is in the injector, and the system is free of leaks.
- Check the oven temperature and detector temperature.
- Program the carrier gas flow as described in Chapter 4, *Digital Gas Control*, or Chapter 5, *Manual Gas Control* according to the pneumatic modules installed.

1. Press **RIGHT INLET** to open the **`RIGHT INLET (PTV)`** menu.
2. Scroll to `Mode:` and press **MODE/TYPE**. In the **`INLET MODE`** submenu, scroll to `PTV Split` and press **ENTER**.
3. Scroll to `Temp` and set the appropriate injector temperature.
4. If your GC contains DPFC modules, you can specify the split flow or split ratio. To set the split flow, scroll to `Split flow` and enter the value in mL/min. The split ratio will be calculated for you.

   To set the split ratio, scroll to `Split ratio` and enter that value. The split flow will be calculated for you.

NOTE The split ratio is the ratio between the split flow and the column flow. For example, if the column flow is 2 mL/min, a 50 mL/min split flow gives a split ratio of 25:1. Only 1/25 of the injected sample would enter the column. The `Split ratio` calculates the split flow from the column flow used during the **Prep Run** phase.

5. Scroll to `Inject phase menu` and press **ENTER** to open the **`INJECT PHASE MENU`** or press **RAMP #** to jump to the various programmed phases.

If you want to program temperature ramps, refer to the *Programming Injection Parameters* operating sequence on page 212 for instructions.

OPERATING SEQUENCE

Programming the PTV Splitless Mode

In PTV splitless mode, the split and purge valves are closed during the **Prep Run** phase and remain closed after the end of the transfer ramp for the programmed duration.

Before you begin, do the following:

- Verify that a column is correctly installed, the correct liner is in the injector, and the system is free of leaks.
- Check the oven temperature and detector temperature.
- Program the carrier gas flow as described in Chapter 4, *Digital Gas Control*, or Chapter 5, *Manual Gas Control* according to the pneumatic modules installed.

1. Press **RIGHT INLET** to open the `RIGHT INLET (PTV)` menu.
2. Scroll to `Mode:` and press **MODE/TYPE**. In the `INLET MODE` submenu, scroll to `PTV Splitless` and press **ENTER**.
3. Scroll to `Temp` and set the appropriate injector temperature.
4. If your GC contains DPFC modules, scroll to `Split flow` and enter the desired value in mL/min.
5. If your GC contains DPFC modules, scroll to `Splitless time` and enter the time during which the split valve should be closed.
6. If constant septum purge is required, scroll to `Const sept purge?` and press **YES**. If constant septum purge is not required, keep `Const sept purge?` set to `No`, then scroll to `Stop purge for` and enter the duration.

If you want to program temperature ramps, refer to the *Programming Injection Parameters* operating sequence on page 212 for instructions.

OPERATING SEQUENCE

Programming the PTV Solvent Split Mode

In PTV solvent split mode, the purge valve is closed during the **Prep Run** phase, and remains closed after the end of the transfer ramp for the programmed time. The split valve is closed at the end of the injection time and evaporation time, if programmed. It remains closed after the transfer ramp for the programmed time.

Before you begin, do the following:

- Verify that a column is correctly installed, the correct liner is in the injector, and the system is free of leaks.
- Check the oven temperature and detector temperature.
- Program the carrier gas flow as described in Chapter 4, *Digital Gas Control*, or Chapter 5, *Manual Gas Control* according to the pneumatic modules installed.

1. Press **RIGHT INLET** to open the `RIGHT INLET (PTV)` menu.
2. Scroll to `Mode:` and press **MODE/TYPE**. In the `INLET MODE` submenu, scroll to `PTV Solvent split` and press **ENTER**.
3. Scroll to `Temp` and set the appropriate injector temperature.
4. If your GC contains DPFC modules, scroll to `Split flow` and enter the desired value in mL/min.
5. If your GC contains DPFC modules, scroll to `Splitless time` and enter the time during which the split valve should be closed.
6. Scroll to `Const sept purge?` and press **ON/YES** to activate a constant septum purge flow, if required. If constant septum purge is not required, keep `Const sept purge?` set to `No`, then scroll to `Stop purge for` and set the duration.

If you want to program temperature ramps, refer to the *Programming Injection Parameters* operating sequence on page 212 for instructions.

OPERATING SEQUENCE

Programming the PTV Large Volume Mode

This feature is available only for GCs with DPFC carrier gas regulation.

In PTV large volume mode, the purge valve is closed during the **Prep Run** phase and remains closed after the end of the transfer ramp for the programmed time. The split valve is closed at the end of the injection time and evaporation time, if programmed. It remains closed after the end of the transfer ramp for the programmed time.

Before you begin, do the following:

- Verify that a column is correctly installed, the correct liner is in the injector, and the system is free of leaks.
- Check the oven temperature and detector temperature.
- Program the carrier gas flow as described in Chapter 4, *Digital Gas Control*, or Chapter 5, *Manual Gas Control* according to the pneumatic modules installed.

1. Press **RIGHT INLET** to open the `RIGHT INLET (PTV)` menu.
2. Scroll to `Mode:` and press **MODE/TYPE**. In the `INLET MODE` submenu, scroll to `PTV large volume` and press **ENTER**.
3. Scroll to `Temp` and set the appropriate injector temperature.
4. If you want a specific split flow, scroll to `Split flow` and enter that value.
5. Scroll to `Splitless time` and enter the time during which the split valve should be closed.
6. Scroll to `Solvent vlv` and set the appropriate solvent valve temperature.
7. Scroll to `Const sept purge?` and press **ON/YES** activate a constant septum purge flow, if required. If constant septum purge is not required, keep `Const`

`sept purge?` set to `No`, then scroll to `Stop purge for` and enter the duration.

If you want to program temperature ramps, refer to the *Programming Injection Parameters* operating sequence on page 212 for instructions.

OPERATING SEQUENCE

Programming Injection Parameters

Use the following sequence to program temperature ramps when operating in PTV split, PTV splitless, PTV solvent split, or PTV large volume mode. Be sure to program the other operating mode parameters before programming the temperature ramps.

1. In the **`RIGHT INLET (PTV)`** menu, scroll to `Inject phase menu` and press **ENTER** to open the **`INJECT PHASE MENU`**.
2. Scroll to `Ramped pressure?`. Press **YES** to program ramped pressure.
3. Scroll to `Inject pres` and enter the injection phase pressure at the beginning of the temperature ramp.
4. Scroll to `Inject temp` and enter an injector temperature lower than the solvent boiling point at the programmed pressure.
5. Scroll to `Inject time` and set the time the injector temperature must be maintained.
6. Scroll to `Transfer pres` and set the sample transfer phase pressure.
7. Scroll to `Transfer temp` and set the sample transfer temperature.
8. Scroll to `Transfer ramp` and set the rate in ºC/s to reach the sample transfer temperature.
9. Scroll to `Transfer time` and set the time the transfer temperature must be maintained.

10. Scroll to `Vent flow` (only in PTV Large Volume and PTV Solvent Split modes) and set the vent flow required during the injection and evaporation phases.

If Solvent Evaporation Has Been Configured:

1. Scroll to `Evap pres` and set the initial pressure for the evaporation temperature ramp during the solvent evaporation phase.
2. Scroll to `Evap ramp` and set the rate in ºC/s to reach the solvent evaporation temperature.
3. Scroll to `Evap temp` and set the solvent evaporation temperature.
4. Scroll to `Evap time` and set the time the transfer temperature must be maintained.

If Injector Cleaning Has Been Configured:

1. Scroll to `Cleaning temp` and set the injector cleaning temperature.
2. Scroll to `Cleaning ramp` and set the rate in ºC/s to reach the cleaning temperature.
3. Scroll to `Cleaning time` and set the time the cleaning temperature must be maintained.

If the Back Flushing System is Configured (DPFC Control Only)

1. Scroll to `Clean flow` and set the value to increase the flow during the cleaning phase.

NOTE

The `Inject pres`, `Transfer pres`, and `Evap pres` parameters will not be displayed if `Ramped pres` is set to `No`.
The `Ramped Pressure?`, `Inject pres`, `Transfer pres`, and `Evap pres` parameters will be displayed only if the GC is configured for DPFC control.

If the Back Flushing system (BKF) is available, the BKF valve is activated at the beginning of the cleaning phase and remains active up to the end of the PTV transfer program.

PTV Injection Cycle

A generic temperature program of the PTV injection cycle is shown in Figure 12-13.

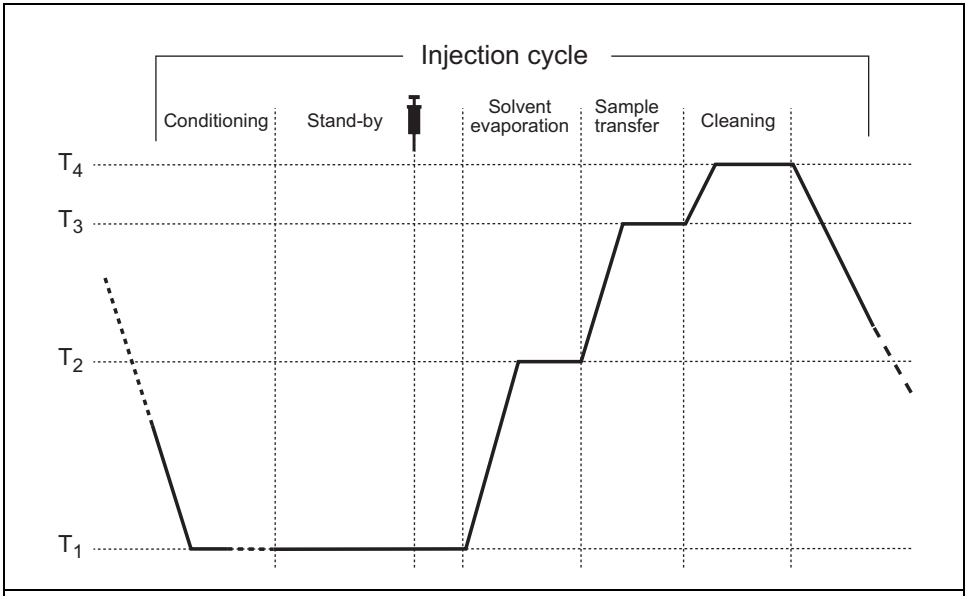

T1. Injection Temperature	T2. Evaporation Temperature
T3. Sample Transfer Temperature	T4. Cleaning Temperature

Figure 12-13. Generic Temperature Profile

OPERATING SEQUENCE

Programming the CT Split Mode

In CT split mode, the split and purge valves remain open throughout the run.

Before you begin, do the following:

- Verify that a column is correctly installed, the correct liner is in the injector, and the system is free of leaks.
- Check the oven temperature and detector temperature.
- Program the carrier gas flow as described in Chapter 4, *Digital Gas Control*, or Chapter 5, *Manual Gas Control* according to the pneumatic modules installed.

1. Press **RIGHT INLET** to open the **`RIGHT INLET (PTV)`** menu.
2. Scroll to `Mode:` and press **MODE/TYPE**. In the **`INLET MODE`** submenu, scroll to `CT Split` and press **ENTER**.
3. Scroll to `Temp` and set the appropriate injector temperature.
4. If your GC contains DPFC modules, you can specify the split flow or split ratio. To set the split flow, scroll to `Split flow` and enter the value in mL/min. The split ratio will be calculated for you.

   To set the split ratio, scroll to `Split ratio` and enter that value. The split flow will be calculated for you.

NOTE The split ratio is the ratio between the split flow and the column flow. For example, if the column flow is 2 mL/min, a 50 mL/min split flow gives a split ratio of 25:1. Only 1/25 of the injected sample would enter the column. The `Split ratio` calculates the split flow from the column flow used during the **Prep Run** phase.

OPERATING SEQUENCE

Programming the CT Splitless Mode

In CT splitless mode, the split and purge valves are closed during the **Prep Run** phase and remain closed after the injection for the programmed duration.

Before you begin, do the following:

- Verify that a column is correctly installed, the correct liner is in the injector, and the system is free of leaks.
- Check the oven temperature and detector temperature.
- Program the carrier gas flow as described in Chapter 4, *Digital Gas Control*, or Chapter 5, *Manual Gas Control* according to the pneumatic modules installed.

1. Press **RIGHT INLET** to open the `RIGHT INLET (PTV)` menu.
2. Scroll to `Mode` and press **MODE/TYPE**. In the `INLET MODE` submenu, scroll to `CT Splitless` and press **ENTER**.
3. Scroll to `Temp` and set the appropriate injector temperature.
4. If your GC contains DPFC modules, scroll to `Split flow` and enter the desired value in mL/min.
5. If your GC contains DPFC modules, scroll to `Splitless time` and enter the time during which the split valve should be closed.
6. Scroll to `Const sept purge?` and press **ON/YES** to activate a constant septum purge flow, if required.

   If constant septum purge is not required, keep `Const sept purge?` set to `No`, then scroll to `Stop purge for` and enter the duration.

OPERATING SEQUENCE

Programming the CT Surge Splitless Mode

NOTE This feature is available only for GCs with DPFC carrier gas regulation.

In CT surge splitless mode, a carrier gas pressure surge activates during the injection phase for a programmed time. This surge accelerates the transfer process of the substances from the injector to the column. The pressure pulse starts in the **Prep Run** phase and lasts until the end of the programmed surge duration. The split and purge valves close during the **Prep Run** phase and remain closed after injection for the programmed duration.

Before you begin, do the following:

- Verify that a column is correctly installed, the correct liner is in the injector, and the system is free of leaks.
- Check the oven temperature and detector temperature.
- Program the carrier gas flow as described in Chapter 4, *Digital Gas Control*, or Chapter 5, *Manual Gas Control* according to the pneumatic modules installed.

1. Press **RIGHT INLET** to open the **`RIGHT INLET (PTV)`** menu.
2. Scroll to `Mode` and press **MODE/TYPE**. In the **`INLET MODE`** submenu, scroll to `CT Splitless w/srg` and press **ENTER**.
3. Scroll to `Temp` and set the appropriate injector temperature.
4. If you want a specific split flow, scroll to `Split flow` and enter that value.
5. Scroll to `Splitless time` and enter the time during which the split valve should be kept closed.
6. Scroll to `Surge pressure` and enter the pressure surge value.
7. Scroll to `Surge duration` and enter the pressure surge duration.

8. Scroll to `Const sept purge?` and press **ON/YES** to activate a constant septum purge flow, if required.

   If constant septum purge is not required, keep `Const sept purge?` set to `No`, then scroll to `Stop purge for` and enter the duration.

13

Gas Sampling Valves (GSV)

This chapter describes the gas sample valves available with the TRACE GC and contains operating sequences for manual and automatic sampling.

Chapter at a Glance...

Operating Sequences

GSV Overview

Two gas sampling valves for manual and automatic sampling are available with the TRACE GC.

Manual Gas Sampling

For manual gas sampling, a 6-port valve is used. A wide range of sampling loops allows the injections of different volume of samples.

The valve is externally installed on the left panel of the GC, at ambient temperature.
The switching from **load sample** to **inject sample** position (and vice-versa) is performed by rotating the valve rotor knob manually.

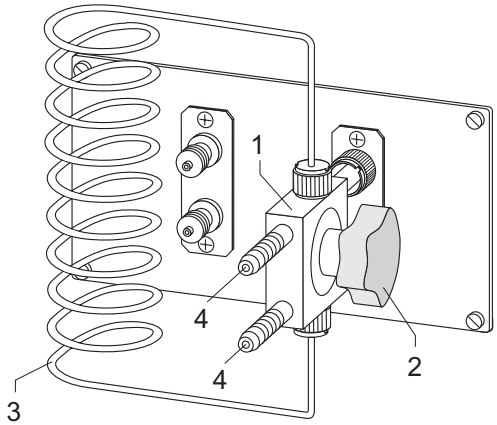

1. Manual Sampling Valve	3. Sampling Loop
2. Valve Rotor Knob	4. Inlet-Outlet Connections

Figure 13-1. Manual Gas Sampling Valve

Automatic Gas Sampling

For automatic gas sampling, a 6-port Valco valve is used. A wide range of sampling loops allows the injections of different volume of samples.

The valve is installed behind the injector-detector compartment of the GC. The valve is not heated.

The sampling loop is installed on the left panel of the GC, at ambient temperature. A filter is installed on the **load sample** line to prevent that suspension particles may damage the valve.

La commutazione tra la posizione **load sample** e la posizione **inject sample** (e viceversa) viene controllata attraverso la tastiera del TRACE GC.

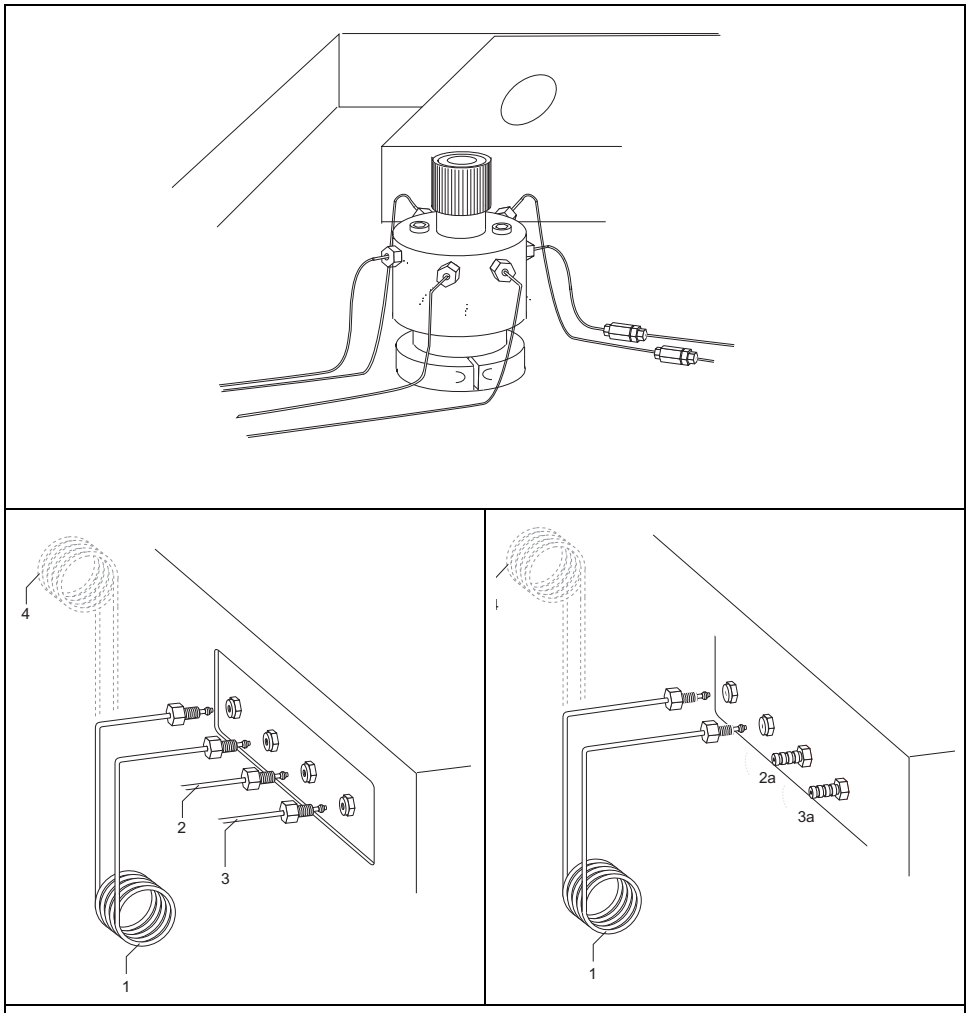

1. Sampling Loop
2-2a. Sample Outlet Connection
3-3a Sample Inlet Connection
4. Position of Sampling Loop when GC-Mass is used
5. Automatic Gas Sampling Valve
6. Filter
7. Inlet Line

Figure 13-2. Automatic Gas Sampling Valve

Automatic GSV Menus

Gas sampling valve editor has two menus according to single or multi sampling options.

Menu for Single Sampling

Press **VALVES** to open the **`VALVES`** menu.

```
        VALVES

Inlet Valves
# 2 Gas sample   Load<
```

Scroll to #2 `Gas sample` then press **ENTER** to open the **`SAMPLING VALVE`** submenu.

```
    SAMPLING VALVE

* Load    <
  Inject
```

Scroll to the valve position you want to set as default. Press **ENTER** to confirm the selection. An asterisk appears on the left of the valve position selected.

Table 13-1. Single Sampling Menu

Menu	Submenu	Comments for Menu
`VALVES`		This line is the menu title bar.

`#2 Gas sample`	`SAMPLING VALVE`
	`Load`
	`Inject`
		The range is Inj=On, Load=Off

Menu for Multi Sampling

Press **RUN TABLE** to open the **RUN TIME EVENTS** menu.

```
    RUN TIME EVENTS
0.00 Valve #2     Inj <
Add run time event
Ext. event defaults
```

Scroll to `0.00 Valve #2` then press **ENTER** to open the **RUN TIME EVENTS** submenu.

```
    RUN TIME EVENTS
Valve # Sampling
Inject at         0.00<
Inject for        1.00
```

Set the time at which the injection must begin and set the time the sampling valve must be maintained on the inject position.

Table 13-2. Multi Sampling Menu

Menu	Submenu	Comments for Submenu
RUN TIME EVENTS		This line is the menu title bar.
0.00 Valve #2	RUN TIME EVENTS	
	Valve # Sampling	This line is the submenu title.
	Inject at	This indicates the time at which the injection must begin.
	Inject for	This indicates the time the sampling valve must be maintained on inject position.

OPERATING SEQUENCE

Programming an Automatic Single Sampling

Before programming the single gas sampling option, do as follows:

- Verify that a column is correctly installed, and the system is free of leaks.
- Check the oven temperature and detector temperature.
- Program the carrier gas flow as described in Chapter 4, *Digital Gas Control*, or Chapter 5, *Manual Gas Control* according to the pneumatic modules installed.

WARNING! Hydrogen is a potentially dangerous gas. Refer to *Using Hydrogen* on page xl for safety information.

1. Press **VALVES** to open the **`VALVES`** menu.
2. Scroll to #2 `Gas sample`
3. Press **ENTER** to open the **`SAMPLING VALVE`** submenu.
4. Scroll to the valve position `Load` or `Inject` you want to set as default.
5. Press **ENTER** to confirm the selection.

OPERATING SEQUENCE

Programming an Automatic Multi Sampling

Before programming the multi gas sampling option, do as follows:

- Verify that a column is correctly installed, and the system is free of leaks.
- Check the oven temperature and detector temperature.
- Program the carrier gas flow as described in Chapter 4, *Digital Gas Control*, or Chapter 5, *Manual Gas Control* according to the pneumatic modules installed.

WARNING! Hydrogen is a potentially dangerous gas. Refer to *Using Hydrogen* on page xl for safety information.

1. Press **RUN TABLE** to open the **`RUN TIME EVENTS`** menu.
2. Scroll to `0.00 Valve #2.`
3. Press **ENTER** to open the **`RUN TIME EVENTS`** submenu.
4. Scroll to `Inject at` and enter the time at which the injection must begin.
5. Scroll to `Inject for` and enter the time the sampling valve must be maintained on inject position.

OPERATING SEQUENCE

Performing a Single Injection with the Manual Sampling Valve

Before injecting the sample, do the following:

- Verify that the column and liner, if used, or adapter are correctly installed and the system is free of leaks.
- Check the oven temperature and detector temperature.
- Program the carrier gas flow as described in Chapter 4, *Digital Gas Control*, or Chapter 5, *Manual Gas Control* according to the pneumatic modules installed.

WARNING! Hydrogen is a potentially dangerous gas. Refer to *Using Hydrogen* on page xl for safety information.

1. When the **Ready to Inject** LED is lit, verify that the manual sampling valve is switched to load position, then fill the sampling loop.
2. When the sampling loop is filled, switch the manual sampling valve to inject position.
3. Press **START**.
4. After the time necessary for the sample transfer, switch the manual sampling valve to load position.

The GC will complete the analysis as programmed.

OPERATING SEQUENCE

Performing a Single Injection with the Automatic Sampling Valve

Before injecting the sample, do the following:

- Verify that the column and liner, if used, or adapter are correctly installed and the system is free of leaks.
- Check the oven temperature and detector temperature.
- Program the carrier gas flow as described in Chapter 4, *Digital Gas Control*, or Chapter 5, *Manual Gas Control* according to the pneumatic modules installed.

WARNING! Hydrogen is a potentially dangerous gas. Refer to *Using Hydrogen* on page xl for safety information.

1. Press **VALVES** to open the **`VALVES`** menu.
2. Scroll to #2 `Gas sample`
3. Press **ENTER** to open the **`SAMPLING VALVE`** submenu.
4. Scroll to the valve position `Load` then press **ENTER** to confirm the selection.
5. Press **PREP RUN.**
6. When the **Ready to Inject** LED is lit, fill the sampling loop.
7. When the sampling loop is filled, scroll to the valve position `Inject` then press **ENTER** to confirm the selection.
8. Press **START**.
9. After the time necessary for the sample transfer, scroll to the valve position `load` then press **ENTER** to confirm the selection..

The GC will complete the analysis as programmed.

OPERATING SEQUENCE

Performing a Multi Injection with the Automatic Sampling Valve

Before injecting the sample, do the following:

- Verify that the column and liner, if used, or adapter are correctly installed and the system is free of leaks.
- Check the oven temperature and detector temperature.
- Program the carrier gas flow as described in Chapter 4, *Digital Gas Control*, or Chapter 5, *Manual Gas Control* according to the pneumatic modules installed.

WARNING! Hydrogen is a potentially dangerous gas. Refer to *Using Hydrogen* on page xl for safety information.

1. Press **RUN TABLE** to open the `RUN TIME EVENTS` menu.
2. Scroll to `0.00 Valve #2`
3. Press **ENTER** to open the `RUN TIME EVENTS` submenu.
4. Scroll to `Inject at` and enter the time at which the injection must begin.
5. Scroll to `Inject for` and enter the time the sampling valve must be maintained on inject position.
6. Press **PREP RUN**.
7. When the **Ready to Inject** LED is lit, fill the sampling loop. When the sampling loop is filled, press **CONFIG** and select `Oven` to open `OVEN` menu.
8. In `OVEN` menu, set both `Auto prep` run and `Autostart` **ON**.

The GC will complete the analysis as programmed, then the sampling cycle is automatically repeated. Pay attention to fill the sampling loop with a new sample at the begin of each sampling cycle otherwise the same sample will be continuously loaded.

SECTION IV

The Oven and Columns

This section contains information about the configuration options for the TRACE GC column oven and procedures for using capillary and packed columns in the oven.

Chapter 14, *The Column Oven*, describes the features and configuration options for the TRACE GC column oven and includes operating sequences for oven programming.

Chapter 15, *Columns*, describes the analytical columns used in the TRACE GC.

14

The Column Oven

This chapter describes the features and configuration options for the TRACE GC 2000 column oven and includes operating sequences for oven programming.

Chapter at a Glance...

Operating Sequences

Column Oven Overview

The TRACE GC column oven provides a stable heating environment for the analytical column. The oven heats and cools quickly. Efficient air circulation ensures a high degree of thermal stability.

Opening the oven door activates a safety microswitch, which automatically switches off the oven heating and the motor for the air circulation fans. The oven is heated by resistor elements powered by a circuit located within the GC control unit.

The column fittings in the oven depend on whether capillary or packed column injectors and detector base bodies are installed. Auxiliary gas lines, if installed, end in M8x1 male fittings between the injector and the detector base bodies. The

oven temperature is monitored by a PT 100 platinum wire sensor and controlled by the GC control unit.

Figure 14-1 shows the left and right detector and injector positions on top of the oven and the fittings inside the oven.

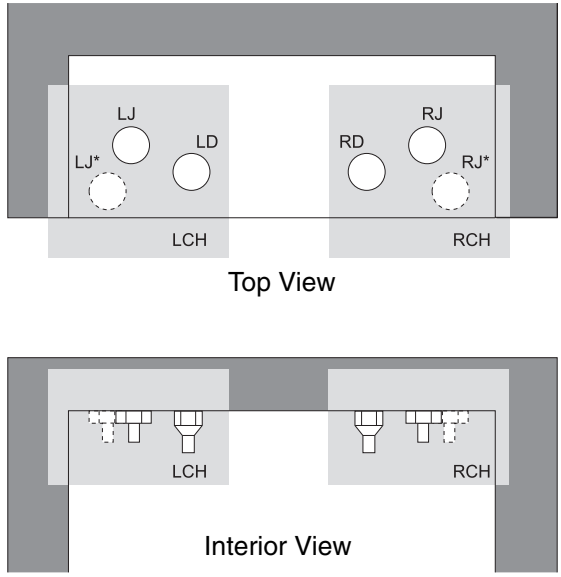

LCH (Left Channel)	RCH (Right Channel)
LJ Left Injector	RJ Right Injector
LJ* 2nd Left Injector	RJ* 2nd Right Injector
LD Left Detector	RD Right Detector

Figure 14-1. Injector/Detector Locations and Fittings

The column oven has the following capabilities:

- maximum temperature of 450 °C
- maximum temperature increase rate of 120 °C/min
- seven linear temperature ramps
- minimum operating temperature of a few degrees above ambient, which is obtained by two modulated cooling flaps controlled by the GC, shown in Figure 14-2

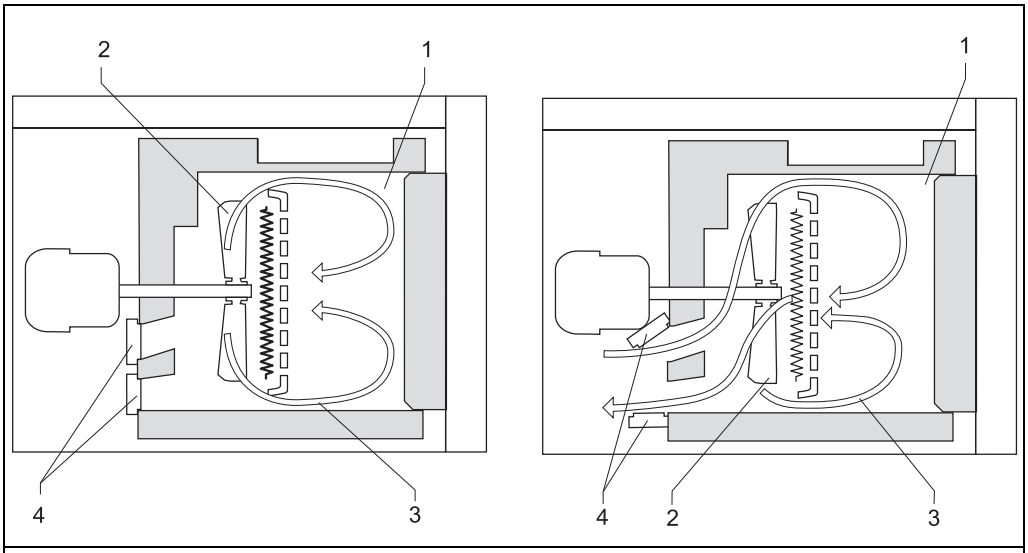

1. Oven	3. Air
2. Fan	4. Cooling Flaps

Figure 14-2. Oven Air Circulation

- temperature control through:
  - — heater control
  - — fine control of hot air exhaust
  - — ambient air intake

- separation of moderately volatile components on thick film capillary columns at near ambient temperatures without the use of a cryogenic system
- with a cryogenic option installed, the oven temperatures can reach –55 °C with liquid carbon dioxide or –99 °C with liquid nitrogen

Figures 14-3 and 14-4 show the cryogenic system with liquid nitrogen and liquid dioxide as a coolant. When liquid carbon dioxide is used, the cylinder must have a dip tube. Refer to the *Site Preparation and Installation Manual* for more information about connecting cryogenic coolants.

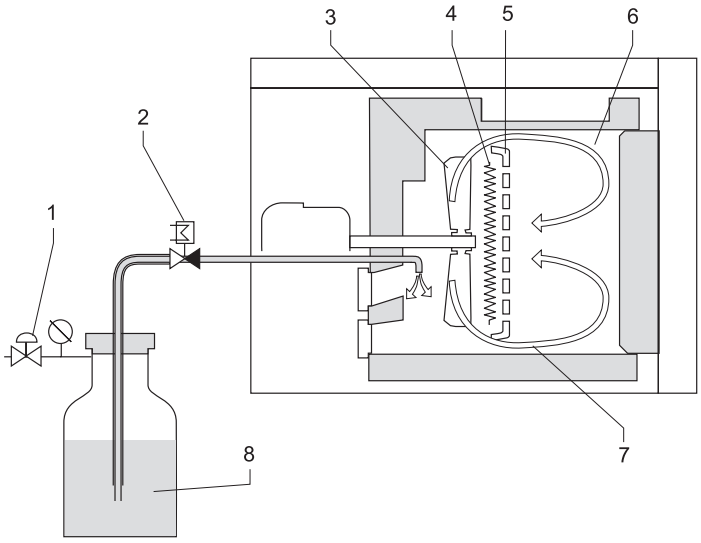

1. Pressure Regulator for Liquid N_2	5. Shield
2. Dosing Valve	6. Oven
3. Fan	7. Air
4. Heater Back	8. Coolant Reservoir for Liquid N_2

Figure 14-3. Cryogenic System with Liquid Nitrogen

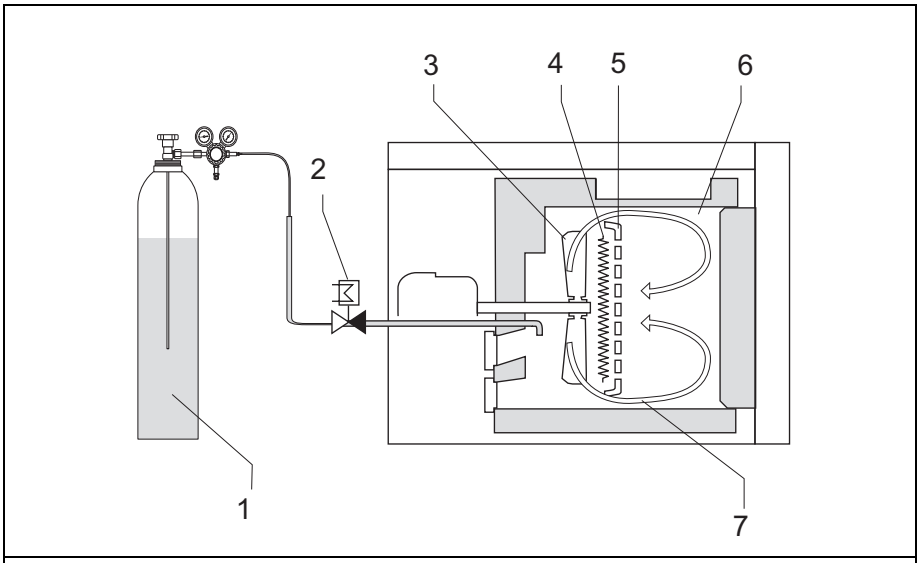

1. Coolant Reservoir for Liquid CO_2	5. Shield
2. Dosing Valve	6. Oven
3. Fan	7. Air
4. Heater Back	

Figure 14-4. Cryogenic System with Liquid Carbon Dioxide

Oven Safety

Opening the oven door cuts off the power to the oven heater, fan, and the cryogenic system (if installed). The setpoints are kept in memory. The display shows the following safety message:

```
            OVEN
Temp          40  Door Open
Initial time           2.00
Ramp 1                  Off
```

To return to normal operation, close the oven door.

WARNING! The oven vents at the rear of the GC discharge hot air during cooling.

WARNING! Hydrogen is a potentially dangerous gas. When hydrogen is used as a carrier gas, the column oven must have a hydrogen sensor. Refer to *Using Hydrogen* on page xl for hydrogen safety information.

WARNING! For safety information about liquid carbon dioxide and liquid nitrogen, refer to *Using Liquid Coolants* on page xlii.

Column Oven Configuration

The **CONFIGURE OVEN** menu contains the control parameters for the column oven.

Press **CONFIG**, then scroll to `Oven` and press **ENTER** to open the menu shown in Table 14-1. Refer to Chapter 3, *Configuration*, for more information about the **CONFIGURE** menu.

Table 14-1. Configure Oven Menu

Menu	Range	Comments
CONFIGURE OVEN		This line is the menu title bar.
Auto prep run	On/Off	Press **ON** to turn on automatic **Prep Run** execution without pressing **PREP RUN**. This feature is useful when you use the autosampler. When this item is set to `Off`, you must press **PREP RUN** to activate the **Prep Run**.
Auto Start	On/Off	Allows an automatic *Start* signal.
PR timeout	0–999.99 min, ∞	Enter the duration of the prep run. The injection must occur within this time or the timeout will return the GC to the **Standby** condition.
Equil time	0–999.99 min	This is the time required for equilibrating the oven temperature after the temperature is set or modified.
Ready delay	0–99.9 min	This parameter delays the **Ready to Inject** condition. This function is useful for on-column injectors. It allows the secondary cooling to cool the injector before the injection. This time must not exceed the `PR timeout` value.
Max temp	0–450 °C	This parameter defines the maximum allowable oven temperature setpoint to protect the column from unintentionally high temperatures. This limit must be set to the manufacturer's maximum recommended operating temperature for the column.

Table 14-1. Configure Oven Menu (Continued)

Menu	Range	Comments
`Enable cryogenics`[1]	Yes/No	This function enables the oven's cryogenic system when it is installed and configured with CO_2 or LN_2 as a coolant. Press **YES** to activate the cryogenic system. Press **NO** to deactivate it.
`Start cryogen`[1]		This parameter defines the temperature at which the oven's cryogenic system regulation occurs. This parameter is displayed if `Enable cryogenics` has been set to **YES**.

1. If the cryogenic system is installed and configured, its parameters are included in the menu.

OPERATING SEQUENCE

Configuring the Column Oven

Use this sequence to configure the column oven.

Configuration Without the Cryogenic System

1. Press **CONFIG**, then scroll to `Oven` and press **ENTER**.
2. Scroll to `Auto prep run`. Press **ON** to enable automatic prep run. Press **OFF** if you want the prep run to be activated by pressing the **PREP RUN** key.
3. Scroll to `PR timeout` and set the duration of the prep run timeout.
4. Scroll to `Equil time` and set the oven temperature equilibration time.
5. Scroll to `Ready delay` and set the delay time before the GC enters the **Ready to Inject** condition.
6. Scroll to `Max Temp` and set the maximum allowable oven temperature.

Configuration with the Cryogenic System

1. Press **CONFIG**, then scroll to `Oven` and press **ENTER**.
2. Scroll to `Auto prep run`. Press **ON** to enable automatic prep run. Press **OFF** if you want the prep run to be activated by pressing the **PREP RUN** key.
3. Scroll to `PR timeout` and set the duration of the prep run timeout.
4. Scroll to `Enable cryogenics` and press **YES** to enable the cryogenic system or **NO** to disable it.
5. Scroll to `Equil time` and set the oven temperature equilibration time.
6. Scroll to `Ready delay` and set the delay time before the GC enters the **Ready to Inject** condition.
7. Scroll to `Start cryogen` and set the cryogenic system regulation temperature. The range depends on the coolant used.
8. Scroll to `Max Temp` and set the maximum allowable oven temperature.

Oven Menu

The **OVEN** menu contains the parameters for programming the oven temperature, from an initial temperature to a final temperature, using up to seven ramps during the analytical run. It is possible to set a single (isothermal) or multiple ramp program.

Press **OVEN** to open the **OVEN** menu, shown in Table 14-2.

Table 14-2. Oven Menu

Menu	Range	Comments
OVEN		This line is the menu title bar.
Temp	On/Off, 0–450 °C[1]	Press **ON** to display the actual and setpoint values. This value is the initial temperature.
Initial time	0–999.99 min	This parameter defines the time the oven remains at the starting temperature after a programmed run has begun.
Ramp 1	On/Off, ∞ 0.0–120 °C/min	This is the temperature ramp rate in °C/min to reach the final temperature. Press **ON** to enable a temperature ramp.
Final temp 1	0–450 °C[1]	This parameter defines the temperature the column oven will reach at the end of the heating or cooling ramp. This line only appears if Ramp 1 is On.
Final time 1	0.00–999.99 min, ∞	This parameter defines how long (in minutes) the oven will maintain the final temperature of the ramp.
Ramp 2-7	On/Off, ∞ 0.0–120 °C/min	After you program the first ramp, the menu adds the Ramp 2 parameter lines. If you do not want an additional ramp, leave this parameter set to **OFF**. To program the ramp, press **ON**. The Final temp and Final time lines for the ramp will be added to the menu. You can repeat this process to program up to seven temperature ramps.
Final temp 2-7	0–450 °C[1]	This parameter defines the temperature the column oven will reach at the end of the relevant ramp.

Table 14-2. Oven Menu (Continued)

Menu	Range	Comments
`Final time 2-7`	0.00–999.99 min, ∞	This parameter defines how long (in minutes) the oven will maintain the final temperature of the ramp.
`Post run temp`	0–450 °C[1]	This parameter defines the temperature the oven will reach after the end of the analytical run. Press **OFF** if you do not want a post run temperature. Press **ON** to display the setpoint value and the `Post run temp`, `Post run time`, `L Post pres`, and `R post pres` parameters.
`Post run time`	0.00–999.99 min	This is the time the oven maintains the post run temperature.
`L/R Post pres`	0–700 kPa	This parameter defines the pressure for the Left or Right carrier during the `Post run time` when the system operates in constant pressure or programmed pressure mode.

1. With a cryogenic system, the ranges are –99 to -300 °C with liquid N_2 and –55 to –300 °C with liquid CO_2.

OPERATING SEQUENCE

Setting Up a Single Ramp Temperature Program

This program raises the initial oven temperature to a specified final temperature at a specified rate and maintains the final temperature for a specified time.

1. Press **OVEN** to open the `OVEN` menu.
2. Scroll to `Temp` and enter the initial temperature.
3. Scroll to `Initial time` and enter the time you want the oven to maintain the initial temperature.
4. Scroll to `Ramp 1` and press **ON**. Enter the ramp rate in °C/minute for the oven to reach the ramp's `Final temp`.
5. Scroll to `Final temp 1` and enter the final temperature for the ramp.
6. Scroll to `Final time 1` and enter the time the oven will maintain the `Final temp`.
7. To end the single ramp program, `Ramp 2` must be `Off`.

OPERATING SEQUENCE

Setting Up a Multiple Ramp Temperature Program

This program raises the initial oven temperature to a specified final temperature through up to seven ramps, each having a specified ramp rate, time, and temperature.

1. Press **OVEN** to open the `OVEN` menu.
2. Scroll to `Temp` and enter the initial temperature.
3. Scroll to `Initial time` and enter the time you want the oven to maintain the initial temperature.
4. Scroll to `Ramp 1` and press **ON**. Enter the ramp rate in °C/minute for the oven to reach the ramp's `Final temp`.
5. Scroll to `Final temp 1` and enter the final temperature for the first ramp.
6. Scroll to `Final time 1` and enter the time the oven will maintain the `Final temp`.
7. Scroll to `Ramp 2` and press **ON**. Enter the ramp rate for the second temperature ramp.
8. Scroll to `Final temp 2` and enter the final temperature for the second ramp.
9. Scroll to `Final time 2` and enter the time the oven will maintain the `Final temp`.
10. To end the multiple ramp temperature program, leave `Ramp 3` set to `Off`. To add additional oven ramps, repeat the steps 7 through 9.

15

Columns

This chapter describes the analytical columns used in the TRACE GC.

Chapter at a Glance...

Operating Sequences

Introduction

The column is the heart of the gas chromatograph where the separation takes place. It is installed in the GC oven and connects the injector to the detector. The GC oven controller accurately controls the column temperature.

Each column has a maximum recommended operating temperature. To protect the column from excessively high temperatures, remember to set the `Max temp` parameter for the column oven in the **`CONFIGURE OVEN`** menu, as described in Chapter 14, *The Column Oven*.

Capillary and Wide-Bore Columns

The capillary and wide-bore capillary columns should be positioned inside the oven on the column support. The column ends should align correctly with the injector and detector base bodies. Wide-bore capillary columns can also be installed into the packed and purged packed injectors.

On-column injectors with autosamplers require a wide-bore pre-column. Pre-columns help prevent the *flooding effect* and prevent contamination of the

analytical column. Refer to Chapter 9, *On-Column Injector (OCI)*, for more information about pre-columns and using autosamplers with on-column injectors.

Using Correct Fittings

To connect a capillary column to the injector and detector base body, you must use the proper column ferrules and retaining nuts.

Column Ferrules

Graphite ferrules and graphitized Vespel® ferrules are used for many column connections.

- Encapsulated graphite ferrules connect the capillary column to the detector base body and to the S/SL and PTV injectors.
- Graphitized Vespel® ferrules are used *only* to connect capillary columns to on-column injectors.

CAUTION **Overtightening compression ferrules does not necessarily produce a stronger, leak-free joint. In fact, very often the reverse is true. Too much pressure can cause a leak in the joint and make it very difficult to reseal that particular joint when changing columns.**

Table 15-1 lists the ferrules to use depending on the pre-column and capillary column external diameter. Ferrules that are the wrong size cause leaks and contamination.

Table 15-1. Ferrules

Capillary Column	Graphite Ferrules	Graphitized Vespel® Ferrules
0.2 mm ID	0.25 mm ID	0.25 mm ID
0.25 mm ID	0.35 mm ID	0.35 mm ID
0.32 mm ID	0.45 mm ID	0.45 mm ID
0.53 mm ID	0.8 mm ID	0.8 mm ID

Retaining Nuts

M4 split retaining nuts are used to connect capillary columns to injector and detector base bodies. The nuts are split to allow easy installation and removal. On-column injectors require a dedicated M8 retaining nut. Figure 15-1 shows how to connect capillary or wide column to injector and detector base body.

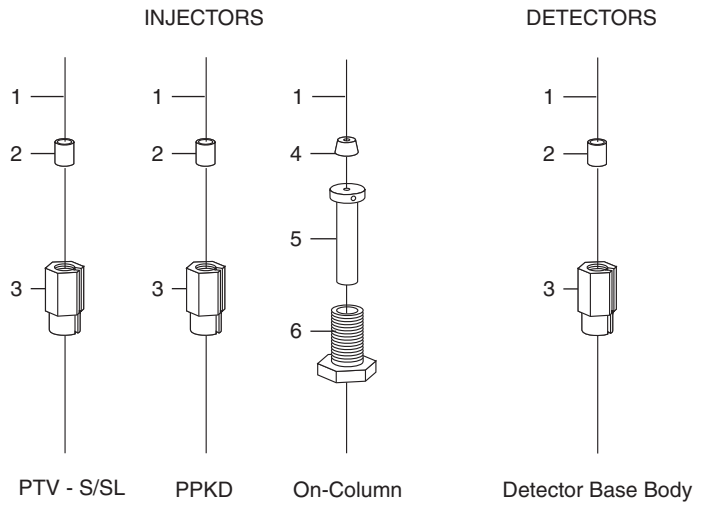

1. Capillary/Wide bore Column
2. Graphite Ferrule
3. M4 Split Retaining Nut
4. Graphitized Vespel® Ferrule
5. Back Washer/Sleeve for Secondary Cooling
6. M8 Retaining Nut
7. Front Ferrule
8. Back Ferrule
9. Nut

Figure 15-1. Capillary/Wide Bore Column to Injector and Detector Base Body Connections

Press-Fit Connections and Butt Connectors

Glass press-fit connectors couple the fused silica pre-column to the capillary column. Y press-fit connections are used for multi-detector configurations. Refer to the TRACE GC *Spare Parts Manual* for a list of available connectors.

Figure 15-2 shows press-fit connections.

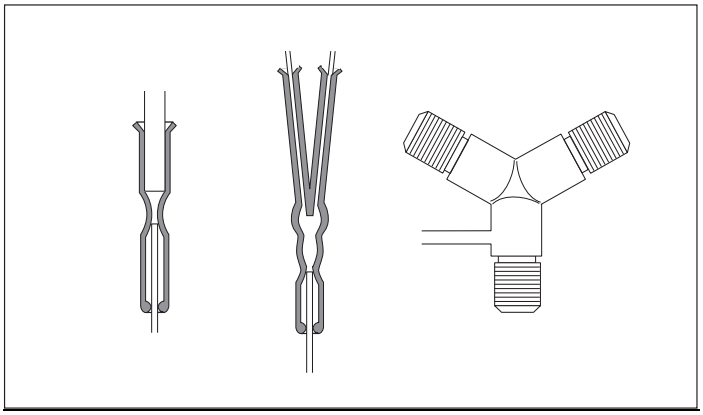

Figure 15-2. Press-Fit Connections

Figure 15-3 shows butt connectors for different applications.

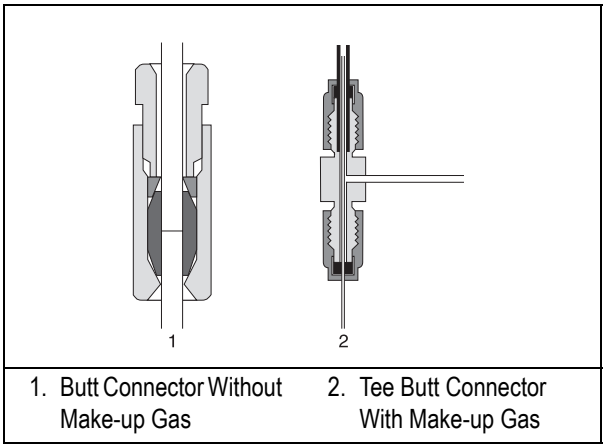

Figure 15-3. Butt Connectors

- Figure 15-3 part 1 shows a butt connector with a single Vespel® or graphite ferrule used to connect a pre-column to an analytical column with the same diameter.
- Figure 15-3 part 2 shows a butt connector with make-up lines used to connect a pre-column, normally wide-bore, to an analytical column with a smaller diameter. The make-up line supplies a make-up gas to effectively flush the connection.

NOTE Press-fit connectors can be used instead of butt connectors in all cases.

OPERATING SEQUENCE

Installing the Column Support

To install the column support into the GC oven as, insert the four pins into the corresponding button-holes on the ceiling of the GC oven as shown in Figure 15-4.

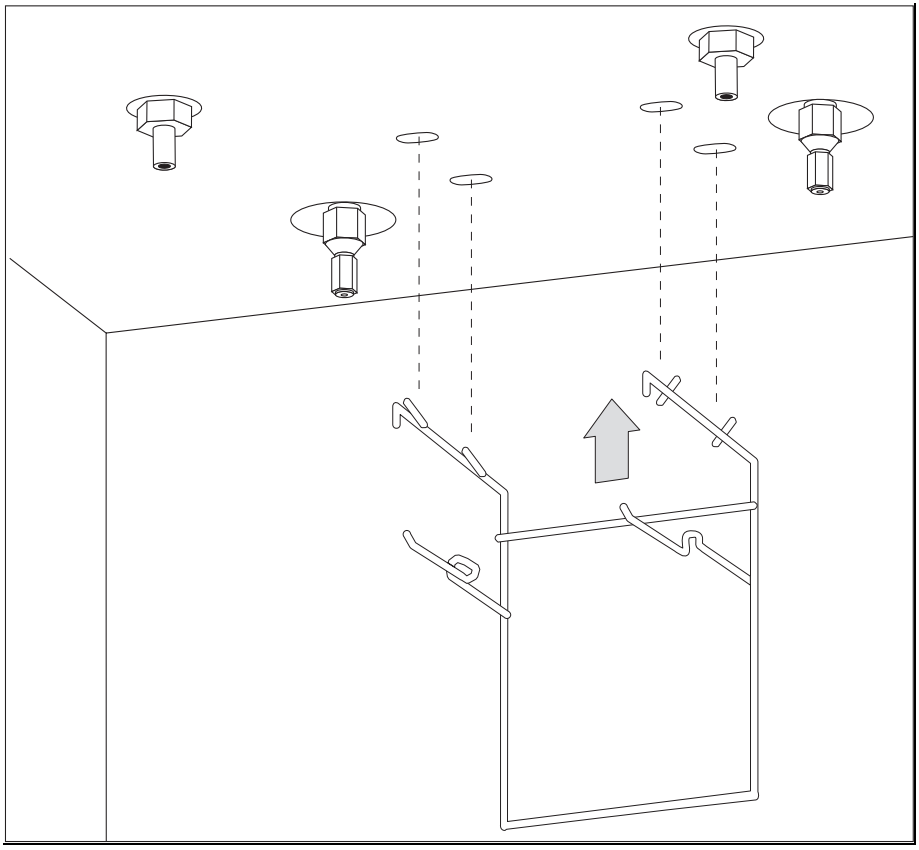

Figure 15-4. Column Support Installation

OPERATING SEQUENCE

Preparing a Capillary Column

To obtain a correct cut, use a ceramic scoring wafer (smooth edge) or sapphire scribe.

Materials required:

- ceramic scoring wafer or sapphire scribe

1. Hold the capillary column between your thumb and index finger with the column extending past the tip of your index finger.
2. Score the column very gently. Excessive force could crush the column end.
3. Snap off the end of the column.
4. Inspect the column end for an even, flat cut.

WARNING! Wear safety glasses to protect your eyes from flying particles while handling, cutting, or installing columns. Be careful handling columns to avoid accidental hand injuries.

PRECAUTIONS

OPERATING SEQUENCE

Connecting a Capillary Column to a S/SL Injector

Before connecting the column, make sure the injector has been properly assembled and programmed and the column support has been installed in the GC oven. For more information about split/splitless injectors, refer to Chapter 6, *Split/Splitless Injector (S/SL)*.

Materials required:

- M4 column retaining nut
- graphite ferrule
- typewriter correction fluid or a felt-tipped pen
- 6 mm wrench

1. Slide the graphite ferrule onto the capillary column with the bevelled end facing the injector. Be careful to avoid damaging the graphite ferrule when inserting the column.

2. Cut at least 1 cm from the column end. Refer to the *Leak Checking an Installed Capillary Column* operating sequence on page 252 for instructions.

3. Place the column on the column support.

4. Use typewriter correction fluid or a felt-tipped pen to mark the correct position of the ferrule from the end of the column depending on the injection technique. The correct positions are as follows:

   - 40 mm for split injection
   - 64 mm for splitless injection

5. Insert the column about 2 cm into the injector and slide the ferrule on the column up to the injector base, then slide the retaining nut onto the column through the side cut. The TRACE GC retaining nuts have a slotted design that makes them easy to add and remove.

6. Finger-tighten the column retaining nut until it starts to grip the column.

7. Adjust the column position so that the mark is even with the column retaining nut.

8. Use the 6 mm wrench to tighten the retaining nut using no more pressure than is necessary to obtain a good seal (1/4 to 1/2 turn).

9. Conduct a leak check of the column installation, as described in the *Leak Checking an Installed Capillary Column* operating sequence on page 271.

OPERATING SEQUENCE

Connecting a Capillary Column to an OC Injector

Before you begin this sequence, insert the syringe needle into the injector. If you are using a pre-column, connect it to the capillary column using a press-fit or butt connector. Also make sure the column support has been installed in the GC oven. For more information about on-column injectors, refer to Chapter 7, *On-Column Injector (OCI)*.

Materials required:

- M8 retaining nut
- backwasher/sleeve for secondary cooling
- graphitized Vespel® ferrule
- 10 mm wrench

1. Slide the M8 Vespel® ferrule, the secondary cooling sleeve, and the retaining nut onto the capillary column (or pre-column, if used). See Figure 15-1 on page 248 for the correct assembly order.

NOTE If the HOT device is used, the M8 retaining nut and HOT device are used in place of the standard secondary cooling sleeve.

2. Slide the column onto the needle protruding into the column oven, then push the column into the injector as far as it will go.

3. Place the column on the column support.

4. Slide the ferrule, the retaining nut, and the secondary cooling sleeve onto the column and tighten the nut onto the injector with a 10 mm wrench until the column is secure. Use no more pressure than is necessary to ensure a good seal.

5. Remove the syringe needle and reinsert it. It should slide easily into the column without friction. If not, repeat the column installation sequence.

   To check that the column positioning in the on-column injector has not blocked the carrier gas path, turn on the carrier gas line. You should hear carrier gas escaping through the syringe needle channel when the injection valve is opened.

6. Leak check the column, as described in the *Leak Checking an Installed Capillary Column* operating sequence on page 271.

OPERATING SEQUENCE

Connecting the Large Volume Injection System Tee Piece

Materials required:

- Uncoret™ 12 m, 0.53 mm ID uncoated pre-column as a retention gap with 3 m long coated segment (SE-54; 0.45 µm film thickness)
- 0.32 or 0.25 mm ID fused silica capillary column
- tee connector with M4 column retaining nuts and graphite ferrules, as shown in Figure 15-5
- 7 mm wrench
- 10 mm wrench

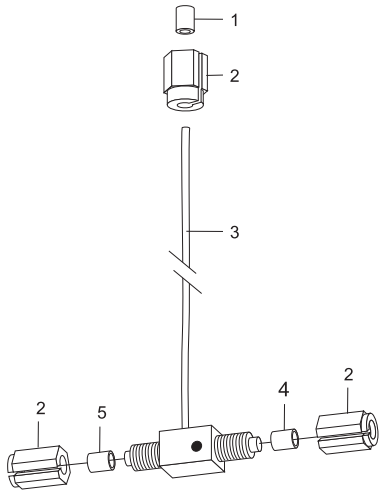

1. 1.0 mm Graphite Ferrule	4. 0.8 mm Graphite Ferrule for 0.53 mm ID Column
2. M4 Retaining Nut	5. 0.45 mm Graphite Ferrule for 0.32 mm ID Column
3. SVE Line Metal Tube	

Figure 15-5. Tee Connection Assembly

NOTE Before starting, insert the AS 2000 autosampler syringe needle into the injector.

We recommend that you connect the analytical column to the detector *after* a leak test of the Solvent Vapor Exit (SVE) system.

Connect the Uncoret™ Pre-Column

1. Connect the Uncoret™ pre-column to the on-column injector as described in the *Connecting a Capillary Column to an OC Injector* operating sequence on page 254.

2. Slide the 0.8 mm graphite ferrule onto the pre-column with the bevelled end facing the tee connector. Be careful to avoid damaging the graphite ferrule when inserting the column.

3. Cut 1 cm from the pre-column end.
4. Insert the pre-column into the tee connector.
5. Slide the M4 retaining nut on the column through the side cut.
6. Tighten the column retaining nut until it starts to grip the pre-column.

Connect the Analytical Column

1. Slide the 0.45 mm graphite ferrule onto the column with the bevelled end facing the tee piece. Be careful to avoid damaging the graphite ferrule when inserting the column.
2. Cut 1 cm from the column end. Refer to the *Leak Checking an Installed Capillary Column* operating sequence on page 252 for more instructions.
3. Place the column on the column support.
4. Insert the analytical column end through the tee connector as shown in Figure 15-6.
5. Slide the M4 retaining nut onto the column through its side cut.
6. Finger-tighten the column retaining nut until it starts to grip the column.

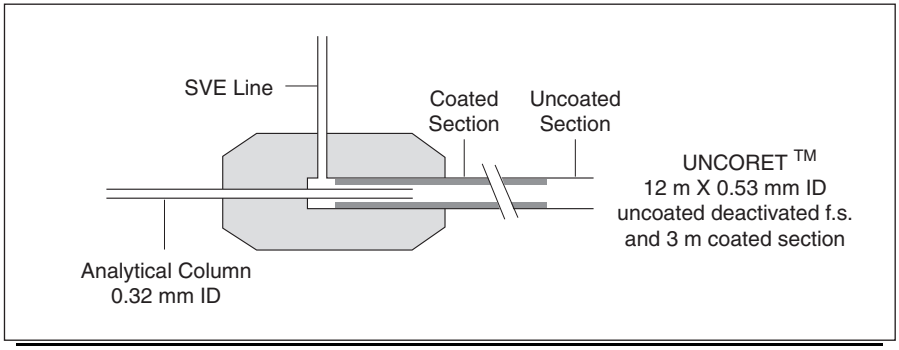

Figure 15-6. Uncoret™ Pre-Column/Column Connection

Connect the SVE system

1. Slide the M4 retaining nut onto the metal tube.
2. Slide the 1.0 mm graphite ferrule onto the SVE line metal tube. The bevelled open end should face the SVE system. Be careful to avoid damaging the graphite ferrule when inserting the column.
3. Insert the SVE line metal tube into the SVE system.
4. Finger-tighten the retaining nut until it starts to grip the SVE system.
5. Use the 6 mm wrench to tighten all the M4 retaining nuts. Use no more pressure than is necessary to obtain a good seal (1/4 to 1/2 turn).

The result of this operation is shown in Figure 15-7.

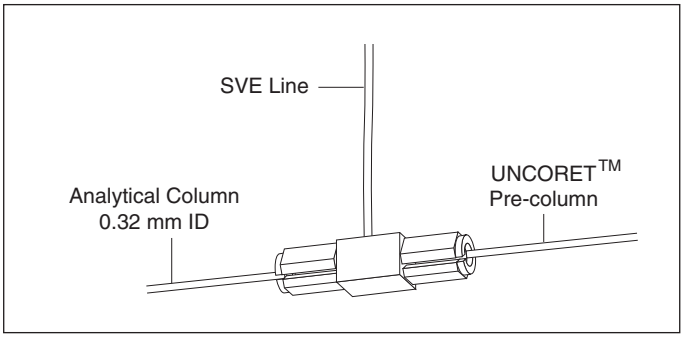

Figure 15-7. Large Volume Injection Tee Connection

6. Leak check the column, as described in the *Leak Checking an Installed Capillary Column* operating sequence on page 271.

OPERATING SEQUENCE

Connecting a Wide-Bore Column to a PPKD Injector

Before you begin, make sure the column support has been installed in the GC oven.

Materials required:

- M4 column retaining nut
- graphite ferrule
- 6 mm wrench

1. Slide the graphite ferrule onto the wide-bore column with the bevelled end facing the injector. Be careful to avoid damaging the graphite ferrule when inserting the column.
2. Cut 1 cm from the column end. Refer to the *Leak Checking an Installed Capillary Column* operating sequence on page 252 for instructions.
3. Place the column on the column support.
4. Insert the column into the injector and slide the ferrule up to the injector base.
5. Slide the M4 retaining nut onto the column through its side cut.
6. Finger-tighten the column retaining nut until it starts to grip the column.
7. Adjust the column position so that its end rests against the bottom of the liner.
8. Use the 6 mm wrench to tighten the retaining nut. Use no more pressure than is necessary to obtain a good seal (1/4 to 1/2 turn).
9. Conduct a leak check of the column installation, as described in the *Leak Checking an Installed Capillary Column* operating sequence on page 271.

OPERATING SEQUENCE

Connecting a Capillary Column to a PTV Injector

Before you begin, make sure the column support has been installed in the GC oven (page 251).

Materials required:

- M4 column retaining split nut
- Graphite ferrule
- 6 mm wrench

1. Slide the graphite ferrule onto the wide-bore column with the bevelled end facing the injector. Be careful to avoid damaging the graphite ferrule when inserting the column.
2. Cut 1 cm from the column end. Refer to the *Leak Checking an Installed Capillary Column* operating sequence on page 252 for instructions.
3. Place the column on the column support.
4. Insert the column into the injector and slide the ferrule up to the injector base.
5. Insert the column about 30 mm into the bottom of the injector.
6. Slide the M4 retaining nut onto the column through its side cut.
7. Finger-tighten the column retaining nut until it starts to grip the column.
8. Use the 6 mm wrench to tighten the retaining nut. Use no more pressure than is necessary to obtain a good seal (1/4 to 1/2 turn).
9. Conduct a leak check of the column installation, as described in the *Leak Checking an Installed Capillary Column* operating sequence on page 271.

Using the PTV for On-Column Injections

Use the following column installation sequence if you wish to use the PTV for injections similar to on-column injections:

1. Slide the graphite ferrule onto the wide-bore column with the bevelled end facing the injector. Be careful to avoid damaging the graphite ferrule when inserting the column.
2. Cut 1 cm from the column end. Refer to the *Leak Checking an Installed Capillary Column* operating sequence on page 252 for instructions.
3. Place the column on the column support.
4. Insert the column into the injector and slide the ferrule up to the injector base.
5. Insert the column as far as possible into the bottom of the injector.
6. Slide the M4 retaining nut onto the column through its side cut.
7. Finger-tighten the column retaining nut until it starts to grip the column.
8. Use the 6 mm wrench to tighten the retaining nut. Use no more pressure than is necessary to obtain a good seal (1/4 to 1/2 turn).
9. Conduct a leak check of the column installation, as described in the *Leak Checking an Installed Capillary Column* operating sequence on page 271.

OPERATING SEQUENCE

Connecting a Capillary Column to an FID, NPD, or FPD

Before beginning this sequence, remove the detector from the detector base body.

Materials required:

- M4 column retaining nut
- graphite ferrule
- 6 mm wrench

1. Slide the graphite ferrule onto the capillary column with the bevelled end facing the detector base body. Be careful to avoid damaging the graphite ferrule when inserting the column.
2. Cut 2–3 cm from the column end. Refer to the *Leak Checking an Installed Capillary Column* operating sequence on page 252 for instructions.
3. Insert the column into the detector base body and slide the ferrule up to the detector base body.
4. Slide the M4 retaining nut onto the column through its side cut.
5. Finger-tighten the column retaining nut until it starts to grip the column.
6. Push the column through the detector base body and into the jet. Depending on the column dimensions, the column may pass through the jet. Pull the column back so that the end of the column is 2 to 3 mm below the tip of the jet. The column insertion depths measured from the bottom of the ferrule are 97 mm for FID and NPD and 127 mm for FPD.
7. Use the 6 mm wrench to tighten the retaining nut. Use no more pressure than is necessary to obtain a good seal (1/4 to 1/2 turn).

WARNING! Be especially careful when using a metal column. With the detector in place, the tip of the jet is polarized to high voltage. The metal column must never touch the tip of the jet. Contact of the metal column with the electrically charged tip can cause electrical shock and damage to the instrument.

OPERATING SEQUENCE

Connecting a Capillary Column to an ECD

Before beginning this sequence, remove the detector from the detector base body.

Materials required:

- M4 column retaining nut
- graphite ferrule
- 6 mm wrench

1. Slide the graphite ferrule onto the capillary column with the bevelled end facing the detector base body. Be careful to avoid damaging the graphite ferrule when inserting the column.
2. Cut 2–3 cm from the column end. Refer to the *Leak Checking an Installed Capillary Column* operating sequence on page 252 for instructions.
3. Insert the column into the detector base body and slide the ferrule up to the detector base body.
4. Slide the M4 retaining nut onto the column through its side cut.
5. Finger-tighten the column retaining nut until it starts to grip the column.
6. Adjust the column position so that it protrudes about 2 cm above the top of the detector base body (109 mm for the bottom of the ferrule).
7. Use the 6 mm wrench to tighten the retaining nut. Use no more pressure than is necessary to obtain a good seal (1/4 to 1/2 turn).

OPERATING SEQUENCE

Connecting a Capillary Column to a PID

Materials required:

- two-way capillary adapter
- two M4 split retaining nuts
- graphite ferrule
- exit line (700 mm long, 0.53 mm ID deactivated uncoated fused silica tubing)
- 0.8 mm ID graphite ferrule for the exit line
- typewriter correction fluid, or felt-tipped pen
- 10 mm wrench
- 6 mm wrench
- 5 mm wrench

Connect the column to the detector inlet

1. Attach the two-way capillary column adapter (shown in Figure 15-8) to the lower end of the detector base body and tighten it by using 10 mm wrench.

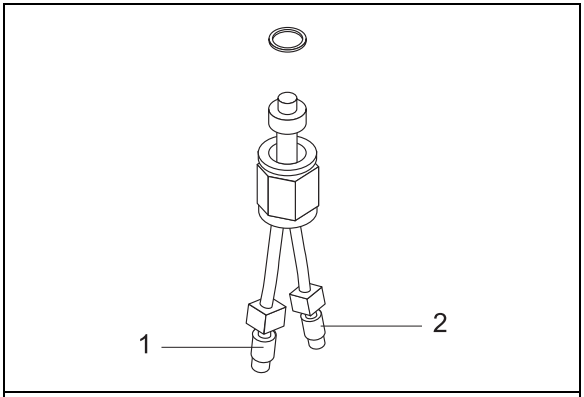

1. Column Inlet 2. Exit Line

Figure 15-8. Two-Way Capillary Adapter

2. Leak test the detector. Refer to *TRACE GC Maintenance and Troubleshooting Manual.*

3. Slide the graphite ferrule onto the capillary column with the bevelled end facing the detector base body. Be careful to avoid damaging the graphite ferrule when inserting the column.

4. Cut 2–3 cm from the column end. Refer to the *Leak Checking an Installed Capillary Column* operating sequence on page 252 for instructions.

5. Use the typewriter correction fluid or a felt-tipped pen to mark the column 132–135 mm from the column end (12–15 mm from the upper end of the detector base body).

6. Gently insert the column into one of the two inlet ports of the two-way capillary adapter. Use the mark as a guide to determine how far to insert the column.

7. Slide the M4 retaining nut onto the column through its side cut.

8. Finger-tighten the column retaining nut until it starts to grip the column.

9. Adjust the column position so that the mark is even with the column retaining nut.

10. Using the 5 mm wrench, keep blocked the inlet adapter nut then use the 6 mm wrench to tighten the retaining nut. Use no more pressure than is necessary to obtain a good seal (1/4 to 1/2 turn).

If correctly positioned, the column enters the detector cell block 12–15 mm from the upper end of the detector base body.

Connect the Exit Line

The exit line must always be connected, even when you do not wish to have a second detector coupled in series with the PID. In this case, an outlet end of the exit line should either be connected to an unused detector base body or exit from the GC oven passing through one of the holes in the oven ceiling, as shown in Figure 14-1 on page 232.

1. Slide the 0.8 mm ID graphite ferrule onto the uncoated fused silica column with the bevelled end facing the detector base body or exit. Be careful to avoid damaging the graphite ferrule when inserting the column.

2. Cut 2–3 cm from the column end. Refer to the *Leak Checking an Installed Capillary Column* operating sequence on page 252 for instructions.

3. Use the typewriter correction fluid or a felt-tipped pen to mark the column 143–145 mm (23–25 mm for the CB 70 detector base body) from the column end.

4. Gently insert the column into the second inlet port of the two-way adapter. Use the mark as a guide to determine how far to insert the column. If correctly positioned, the exit line enters the detector cell block 23–25 mm from the upper end of the detector base body.

5. Slide the M4 retaining nut onto the column through its side cut.

6. Finger-tighten the column retaining nut until it starts to grip the column.

7. Use the appropriate wrench to tighten the retaining nuts. Use no more pressure than is necessary to obtain a good seal (1/4 to 1/2 turn).

Figure 15-9 shows the column connections for the PID and a detector coupled with an auxiliary detector.

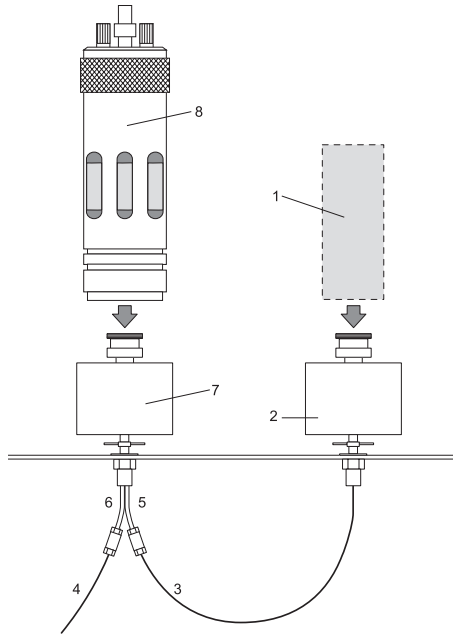

1. Auxiliary Detector	5. Exit Line
2. 2nd Detector Base Body	6. Inlet Line
3. Fused Silica Tubing	7. Detector Base Body
4. Column	8. PID

Figure 15-9. PID Column Connections

OPERATING SEQUENCE

Connecting a Capillary Column to a TCD

Before you connect the capillary column to the TCD, be sure to do the following:

- condition the column
- make sure the capillary column adapter is mounted on the detector base body

Materials required:

- M4 column retaining nut
- graphite ferrule
- 6 mm wrench
- capillary column adapter

1. Connect the capillary column adapter to the detector base body.
2. Slide the graphite ferrule onto the column with the beveled end facing the injector. Be careful to avoid damaging the graphite when inserting the column.
3. Cut 2–3 cm from the column end. Refer to the *Leak Checking an Installed Capillary Column* operating sequence on page 252 for instructions.
4. Insert the column into the detector base body and slide the ferrule up to the detector base body.
5. Slide the M4 retaining nut onto the column through its side cut.
6. Finger-tighten the retaining nut until it starts to grip the column.
7. Push the column all the way up into the detector, then pull the column out about 1 mm.
8. Tighten the M4 retaining nut using the 6 mm wrench. Use no more pressure than is necessary to achieve a good seal (1/4 to 1/2 turn).

OPERATING SEQUENCE

Connecting a Capillary Column to an PDD

Before beginning this sequence, remove the detector from the detector base body.

Materials required:

- M4 column retaining nut
- graphite ferrule
- 6 mm wrench

1. Slide the graphite ferrule onto the capillary column with the bevelled end facing the detector base body. Be careful to avoid damaging the graphite ferrule when inserting the column.
2. Cut 2–3 cm from the column end. Refer to the *Leak Checking an Installed Capillary Column* operating sequence on page 252 for instructions.
3. Insert the column into the detector base body and slide the ferrule up to the detector base body.
4. Slide the M4 retaining nut onto the column through its side cut.
5. Finger-tighten the column retaining nut until it starts to grip the column.
6. Adjust the column position so that it protrudes about 33-35 mm above the top of the detector base body (123 mm for the bottom of the ferrule).
7. Use the 6 mm wrench to tighten the retaining nut. Use no more pressure than is necessary to obtain a good seal (1/4 to 1/2 turn).

Column Insertion Depths Summary Tables

The following Tables 15-2 and 15-3 reassume the injectors and detectors column insertion depths measured from the bottom of the ferrule.

Table 15-2. Column Insertion Depths for Injectors

Column Inserption Depths (mm) for S/SL - PTV - OC Injectors

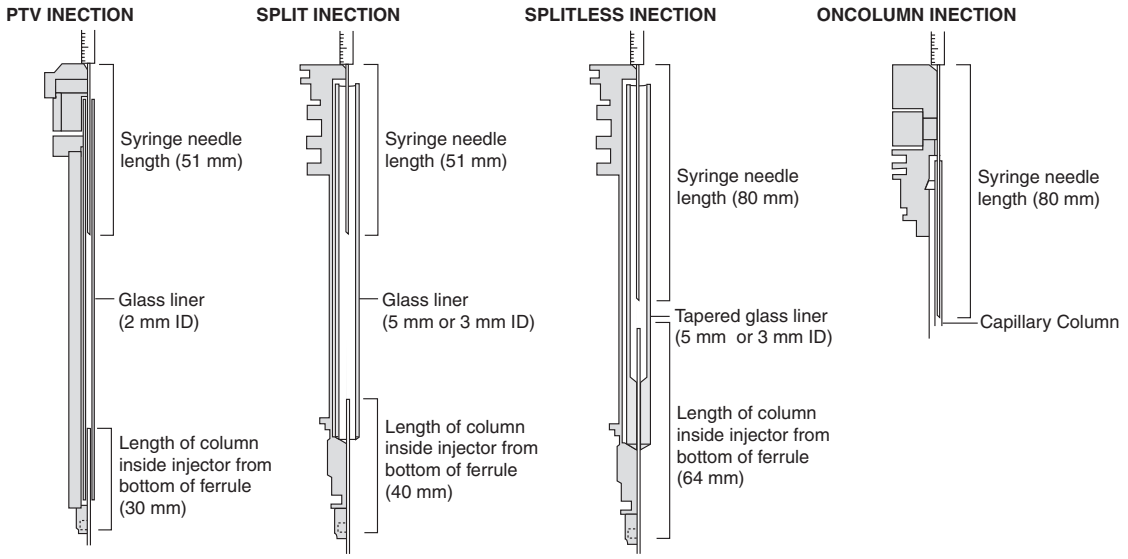

INECTORS NOT DRAWN TO SCALE

Table 15-3. Column Insertion Depths for Detectors

Column Inserption Depths (mm) for FID - ECD - NPD - PID - FPD - TCD - PDD Detectors

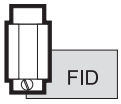 FID	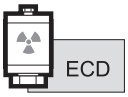 ECD	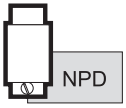 NPD	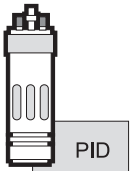 PID	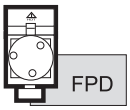 FPD	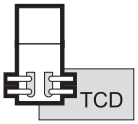 TCD	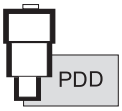 PDD
97	109	97	135 Column 144 Exit L.	127	As far as it will go	123

OPERATING SEQUENCE

Leak Checking an Installed Capillary Column

Before you begin this sequence, you must install the column into the injector, but not into the detector base body.

Materials needed:

- silicon rubber septum of any dimension

1. Carefully push the detector end of the capillary column into the rubber septum to seal it.
2. Close off any splitting or purge valves on the injector.
3. Increase the carrier gas pressure to 150–200 kPa and allow the column and injector pressure to stabilize. This can take up to 30 seconds.
4. Reduce the pressure to 50 kPa.
5. Observe the actual pressure. In a leak-tight system, the pressure should not drop more than 1 kPa/minute.

If your installed column is leak tight, remove the septum and prepare the end of the column for installation into the detector. Refer to the *Leak Checking an Installed Capillary Column* operating sequence on page 252 for instructions.

If it is not leak tight, check the tightness of the column ferrule and repeat the leak check sequence. If the leak persists, refer to the TRACE GC *Maintenance and Troubleshooting Manual* (PN 31709180).

Packed Columns

There are different sizes of packed columns with both metric and imperial dimensions with dedicated adapters. The TRACE GC accepts 1/4 inch OD, 1/8 inch OD imperial metal packed columns, 6 mm OD metric metal packed columns and 6 mm OD glass packed columns. With the appropriate conversion kit, you can also install metal packed columns into the S/SL injector.

Metric Packed Columns

The following metric packed columns are commonly used:

- 6 mm OD packed metal column
- 6 mm OD packed glass column

Using Correct Metric Fittings

To connect packed columns to injector and detector base bodies, you must use the correct column ferrules and retaining nuts.

Metric Column Ferrules

The ferrule size should be compatible with the packed column. The type of ferrule you use depends on the type of packed column:

- metal packed columns require double brass ferrules (front and back)
- glass packed columns require Viton® O-ring or PTFE ferrules

Metric Retaining Nuts

Use hexagonal 1/4 inch column retaining nuts to connect all metal packed columns and round 1/4 inch knurled or grooved nuts to connect glass packed columns.

Table 15-4 lists the correct fittings for different sizes of metric packed columns. Figure 15-10 shows the fittings.

Table 15-4. Metric Packed Column Fittings

Column Type	Ferrules	Retaining Nut
6 mm OD metal column	brass double	hexagonal 1/4 inch
6 mm OD glass column	Viton® O-Ring + washer	round 1/4 inch

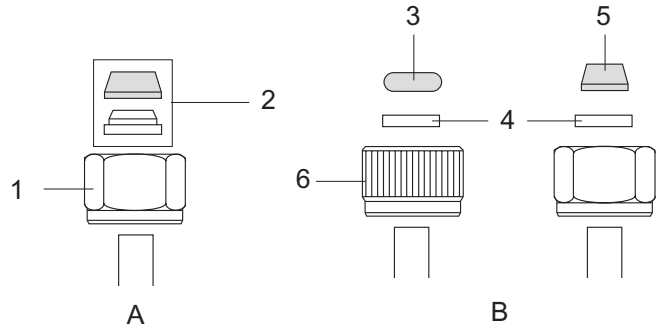

1. Hexagonal 1/4 Inch Nut
2. Double Brass Ferrules
3. Viton® O-Ring
4. Washer
5. PTFE Ferrule
6. Round 1/4 Inch Knurled Nut

A. 6 mm OD Metal Column
B. 6 mm OD Glass Column

Figure 15-10. Metric Packed Column Fittings

Imperial Packed Columns

The following types of imperial packed columns are commonly used.

- 1/4 inch OD metal packed column
- 1/8 inch OD metal packed column

Using Correct Imperial Fittings

To connect packed columns to injector and detector base bodies, you must use the correct column ferrules and retaining nuts.

Imperial Column Ferrules

The ferrule size should be compatible with the packed column.

- Use Swagelok® ferrules (front and back) with a 1/4 inch hexagonal nut to connect 1/4 inch metal packed columns to injector and detector metric/ imperial adapters.
- Use Swagelok® ferrules (front and back), and Swagelok® nuts to connect 1/8 inch metal packed columns to injector and detector metric/imperial adapters.

Imperial Retaining Nuts

Use Swagelok® nuts to connect all packed columns.

Table 15-5 lists the correct fittings depending on the type of imperial packed column.

Table 15-5. Imperial Size Packed Column Fittings

Column Type	Ferrules	Retaining Nut
metal column 1/4 inch	Swagelok® 1/4 inch	hexagonal 1/4 inch
metal column 1/8 inch	Swagelok® 1/8 inch	Swagelok® 1/8 inch

Adapters for Metal Packed Columns

To connect metal packed columns to the PKD or PPKD injector and the detector base bodies, you must use a proper metal metric/imperial adapter. Figure 15-11 shows an example of adapters.

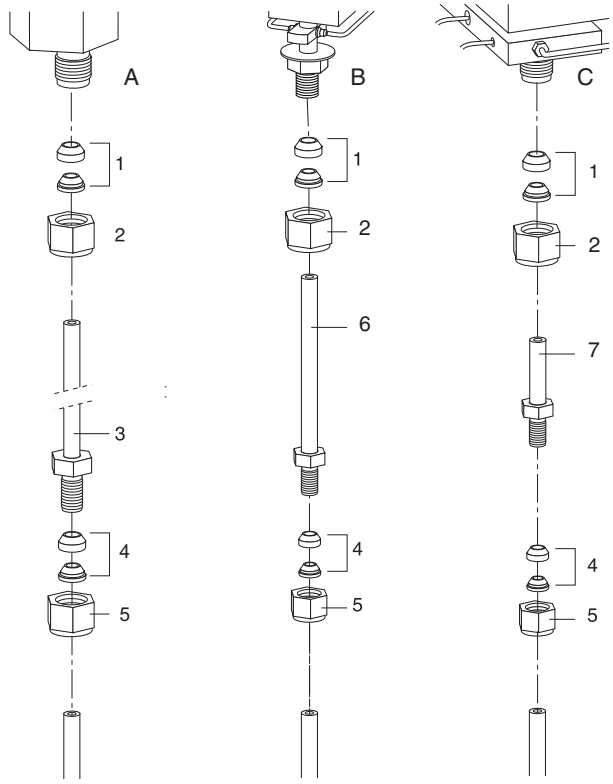

A. PKD or PPKD Injector	3. Adapter for PKD or PPKD Injector
B. Detector Base Body for Packed Column	4. Double Ferrule
C. TCD Base Body	5. Nut
1. Double Ferrule	6. Adapter for Detector Base Body
2. Nut	7. Adapter for TCD

Figure 15-11. Injector and Detector Base Body Adapters

The adapters size depends on the type of:

- column that has to be use: 6-mm, 1/4-inch, 1/8-inch OD
- injector installed on the GC: PKD, PPKD
- detector base body installed on the GC: for packed columns, for TCD

NOTE Metal Packed Column may be installed into the S/SL injector and the detector base body for capillary column by using the appropriate conversion kit as shown in Figure 15-12.

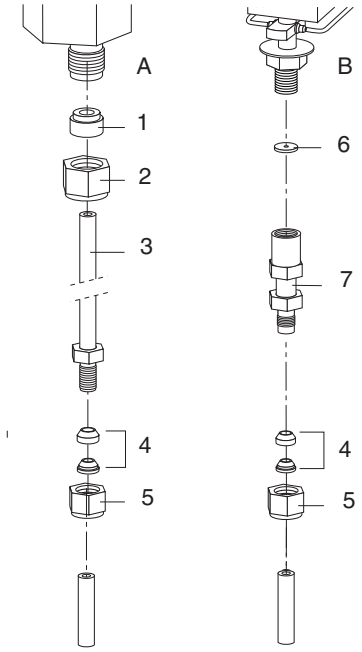

A. S/SL Injector	4. Double Ferrule
B. Detector Base Body for Capillary Column	5. Nut
1. Ferrule	6. Ferrule
2. Nut	7. Adapter for Detector Base Body
3. Adapter for S/SL Injector	

Figure 15-12. Conversion Kit

OPERATING SEQUENCE

Preparing a Metal Packed Column

Before you begin, verify that the proper adapters are installed on the injector and detector side.

Slide the fittings onto the packed column injector and detector ends in the order and direction shown in Figure 15-13.

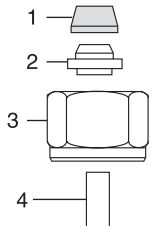

1. Front Ferrule	3. Retaining Nut
2. Back Ferrule	4. Packed Column

Figure 15-13. Metal Packed Column Fittings

OPERATING SEQUENCE

Connecting a Metal Packed Column to a PKD or PPKD Injector

Materials required:

- retaining nut
- ferrules
- 10 mm or 1/4 inch wrench
- adapter for injector

1. Make sure that your packed column has been correctly prepared as described in the *Preparing a Metal Packed Column* operating sequence on page 277.
2. Insert the appropriate adapter into the bottom of the injector, then push up the adapter into the injector as far as possible.
3. Slide the ferrule up to injector base then finger-tighten the adapter retaining nut until it starts to grip the adapter.
4. Use the wrench to tighten the retaining nut. Use no more pressure than is necessary to obtain a good seal (1/4 to 1/2 turn).
5. Insert the inlet end of the column to the adapter base as far as possible.
6. Slide the ferrule up to adapter base then finger-tighten the column retaining nut until it starts to grip the column.
7. Use the wrench to tighten the retaining nut. Use no more pressure than is necessary to obtain a good seal (1/4 to 1/2 turn).

CAUTION **Overtightening the compression ferrule does not necessarily produce a stronger, leak-free joint. In fact, very often the reverse is true. Overtightening can cause a leak in the joint and make it very difficult to reseal that particular joint when changing columns.**

OPERATING SEQUENCE

Connecting a Metal Packed Column to an FID, NPD, FPD, or ECD

Materials required:

- retaining nut
- ferrules
- 10 mm or 1/4 inch wrench
- adapter for detector

1. Make sure that your packed column has been correctly prepared as described in the *Preparing a Metal Packed Column* operating sequence on page 277.
2. Insert the appropriate adapter into the bottom of the detector base, then push up the adapter into the detector base as far as possible.
3. Slide the ferrule up to detector base then finger-tighten the adapter retaining nut until it starts to grip the adapter.
4. Use the wrench to tighten the retaining nut. Use no more pressure than is necessary to obtain a good seal (1/4 to 1/2 turn).
5. Insert the detector end of the column to the adapter base as far as possible.
6. Slide the ferrule up to adapter base then finger-tighten the column retaining nut until it starts to grip the column.
7. Use the wrench to tighten the retaining nut. Use no more pressure than is necessary to obtain a good seal (1/4 to 1/2 turn).

CAUTION **Overtightening the compression ferrule does not necessarily produce a stronger, leak-free joint. In fact, very often the reverse is true. Overtightening can cause a leak in the joint and make it very difficult to reseal that particular joint when changing columns.**

OPERATING SEQUENCE

Connecting a Metal Packed Column to a TCD

Materials required:

- metric/imperial retaining nut
- metric/imperial ferrules
- 10 mm or 1/4 inch wrench
- adapter for detector

1. Insert the appropriate adapter into the bottom of the detector base, then push up the adapter into the detector base as far as possible.
2. Slide the ferrule up to detector base then finger-tighten the adapter retaining nut until it starts to grip the adapter.
3. Use the wrench to tighten the retaining nut. Use no more pressure than is necessary to obtain a good seal (1/4 to 1/2 turn).
4. Insert the detector end of the column to the adapter base as far as possible.
5. Slide the ferrule up to adapter base then finger-tighten the column retaining nut until it starts to grip the column.
6. Use the wrench to tighten the retaining nut. Use no more pressure than is necessary to obtain a good seal (1/4 to 1/2 turn).

CAUTION **Overtightening the compression ferrule does not necessarily produce a stronger, leak-free joint. In fact, very often the reverse is true. Overtightening can cause a leak in the joint and make it very difficult to reseal that particular joint when changing columns.**

OPERATING SEQUENCE

Connecting a Metal Packed Column to an PDD

Before beginning this sequence remove the detector from the detector base body. During this operation make care to withdraw the detector vertically.

NOTE The PDD is compatible ONLY with 1/8-inch OD packed columns (NO 1/4-inch SS or 6 mm OD glass columns)

Materials required:

- PDD fixing tool
- graphitized Vespel® ferrule
- washer
- silver seal
- 0.7 mm ID fused silica capillary tubing (about 30 cm length)
- adapter for detector
- 6MB-1/8 inch Swagelock® column adapter
- retaining nut
- ferrules
- 8 mm wrench
- 10 mm or 1/4 inch wrench

1. Make sure that your packed column has been correctly prepared as described in the *Preparing a Metal Packed Column* operating sequence on page 277.

2. Cut about 30 cm of capillary tubing.
   Insert the appropriate fittings on the capillary tubing in the following order as shown in Figure 15-14.
   - adapter for detector
   - silver seal
   - washer
   - graphitized Vespel® ferrule

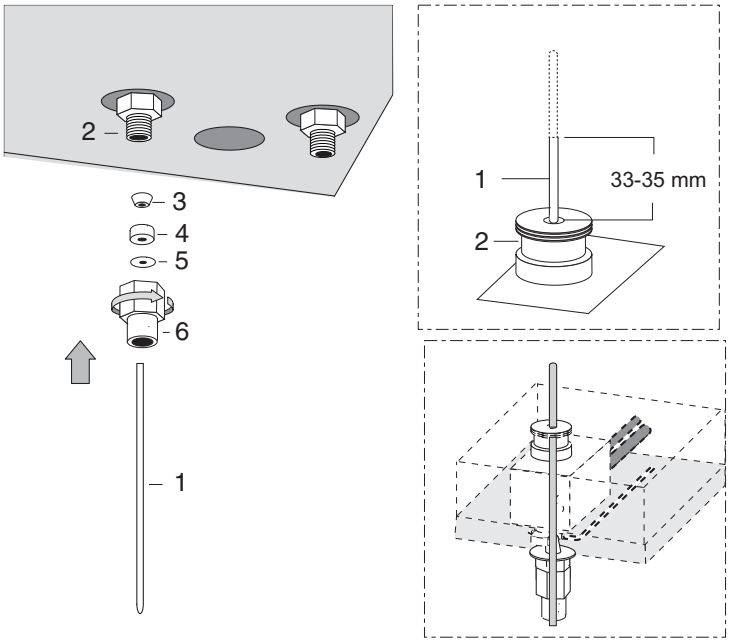

1. 0.7 mm ID Fused Silica Capillary Tubing	2. Detector Base Body
3. Graphitized Vespel® ferrule	4. Washer
5. Silver Seal	6. Adapter for Detector.

Figure 15-14. Connection to the PDD Detector (1)

3. Insert the capillary tubing and its fittings into the bottom of the detector base.

4. Push up the capillary tubing until the upper end protrudes from the detector base body and the lower end is at the same level of the base of the adapter retaining nut as shown in Figure 15-14.
   Then push up the capillary tubing by screwing up a blind 6MB nut into the adapter in order to maintain the lower of the capillary completely inside the adapter.

5. Finger-tighten the adapter retaining nut until it starts to grip the detector base. The capillary tubing must protrude from the detector base body from 33-35 mm, then cut the exceeding portion as shown in Figure 15-14.

6. Use the wrench to tighten the retaining nut. Use no more pressure than is necessary to obtain a good seal (1/4 to 1/2 turn).

7. Insert the column adapter into the base of the adapter for detector as shown in Figure 15-15.

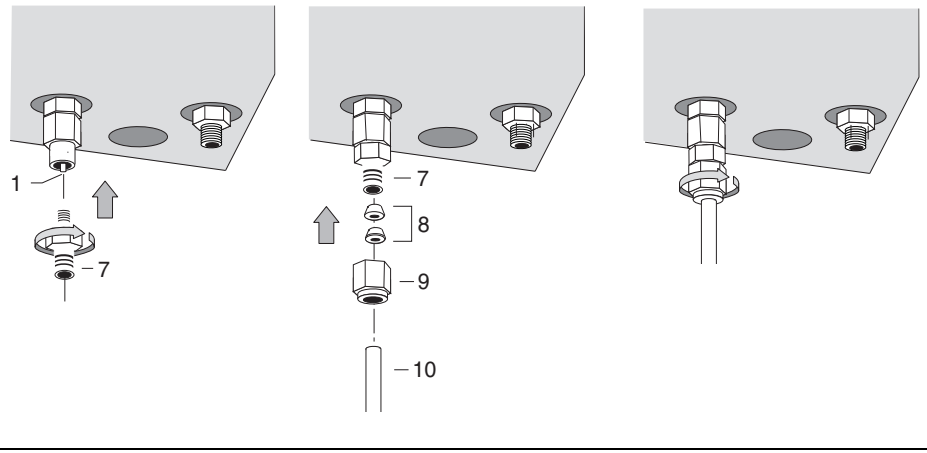

8. Double Ferrule	7. Column Adapter
10. Packed Column	9. Column Nut

Figure 15-15. Connection to the PDD Detector (2)

8. Finger-tighten the column adapter retaining nut until it starts to grip the adapter for detector.

9. Use the wrench to tighten the retaining nut. Use no more pressure than is necessary to obtain a good seal (1/4 to 1/2 turn).

10. Insert the detector end of the column to the column adapter base.

11. Slide the ferrule up to adapter base then finger-tighten the column retaining nut until it starts to grip the column.

12. Use the wrench to tighten the retaining nut. Use no more pressure than is necessary to obtain a good seal (1/4 to 1/2 turn).

CAUTION **Overtightening the compression ferrule does not necessarily produce a stronger, leak-free joint. In fact, very often the reverse is true. Overtightening can cause a leak in the joint and make it very difficult to reseal that particular joint when changing columns.**

OPERATING SEQUENCE

Preparing a Glass Packed Column

Before you begin, verify that the injector and the detector base bodies are compatible with your metric or imperial column. Install the proper adapters if you are installing an imperial packed column.

NOTE Packed columns have one end longer than the other. Usually the longer end connects to the detector base body and the shorter end connects to the injector. Depending on the application, the connection may be reversed.

Slide the fittings onto the packed column injector and detector ends in the order and direction shown in Figure 15-16.

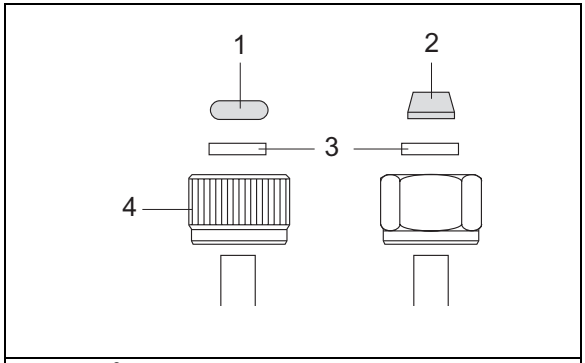

1. Viton® O-Ring	3. Washer
2. PTFE Ferrule	4. Knurled Nut

Figure 15-16. Glass Packed Column Fittings

OPERATING SEQUENCE

Connecting a Glass Packed Column to a TCD and to a PKD or PPKD injector

Materials required:

- retaining nut
- ferrules
- 60 mm glass liner

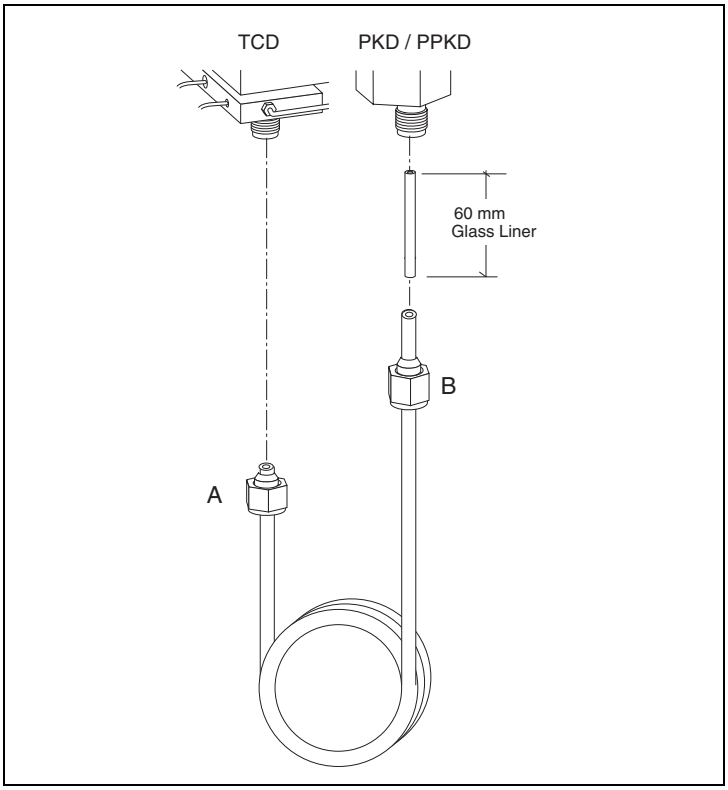

Figure 15-17. TCD-PKD/PPKD Configuration

In this configuration the longer end of the column connects to the injector and the shorter end connects to the detector base as shown in Figure 15-17. The use of a 60 mm glass liner is required.

1. Make sure that your packed column has been correctly prepared as described in the *Preparing a Glass Packed Column* operating procedure on page 284.

2. Insert the liner into the bottom of the injector.

3. Simultaneously insert the column ends A and B respectively into the detector and injector bodies paying attention that:

   — the column end A touches the bottom of the detector base.

   — the liner and the column end B are pushed up into the injector as far as possible.

4. Finger-tighten the column ends A and B retaining nuts until they start to grip the column.

CAUTION **Overtightening the compression ferrule does not necessarily produce a stronger, leak-free joint. In fact, very often the reverse is true. Overtightening can cause a leak in the joint and make it very difficult to reseal that particular joint when changing columns.**

OPERATING SEQUENCE

Connecting a Glass Packed Column to an FID, NPD, FPD or ECD and to a PKD or PPKD injector

Materials required:

- retaining nut
- ferrules
- 100 mm glass liner

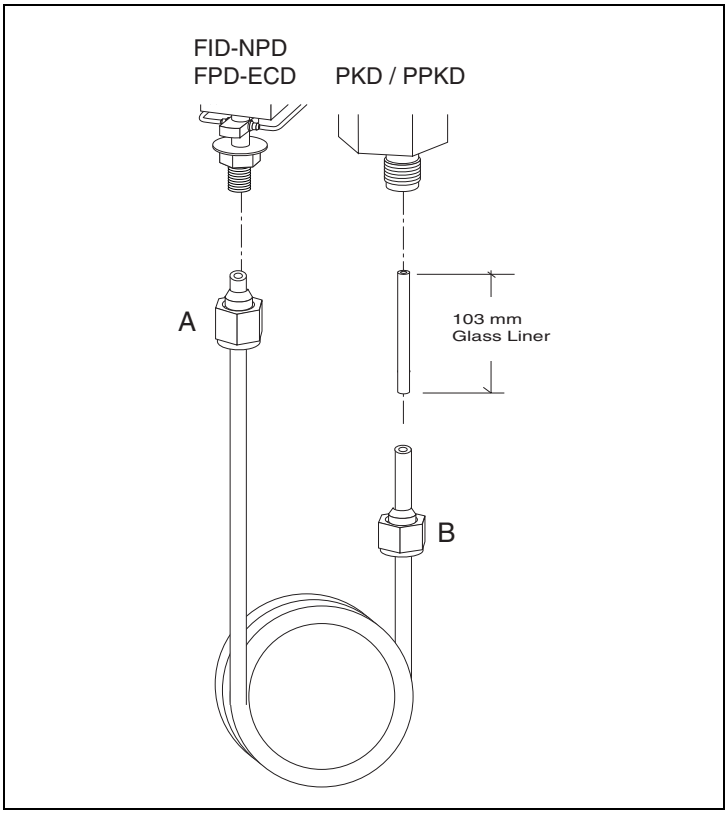

Figure 15-18. FID,NPD,FPD,ECD-PKD/PPKD Configuration

In this configuration the longer end of the column connects to the detector base body and the shorter end connects to the injector as shown in Figure 15-17. The use of a 100 mm glass liner is required.

1. Make sure that your packed column has been correctly prepared as described in the *Preparing a Glass Packed Column* operating procedure on page 284.

2. Insert the liner into the bottom of the injector.

3. Simultaneously insert the column ends A and B respectively into the detector and injector bodies paying attention that:

   — the column end A touches the bottom of the detector base.

   — the liner and the column end B are pushed up into the injector as far as possible.

4. Finger-tighten the column ends A and B retaining nuts until they start to grip the column.

CAUTION **Overtightening the compression ferrule does not necessarily produce a stronger, leak-free joint. In fact, very often the reverse is true. Overtightening can cause a leak in the joint and make it very difficult to reseal that particular joint when changing columns.**

OPERATING SEQUENCE

Connecting a Glass Packed Column to a TCD and to a S/SL injector

Materials required:

- liner cap removal tool
- retaining nut
- ferrules
- metal liner

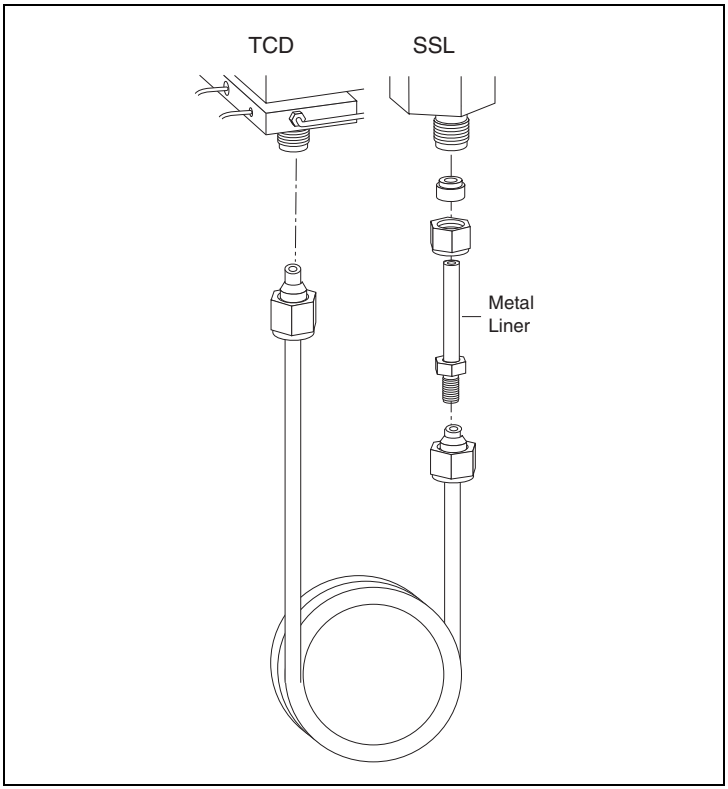

Figure 15-19. TCD-SSL Configuration

In this configuration the longer end of the column connects to the detector base and the shorter end connects to the injector as shown in Figure 15-19. The use of a metal liner is required.

Removing the S/SL Injector Top Components

With reference to Figure 15-20 proceed as follows:

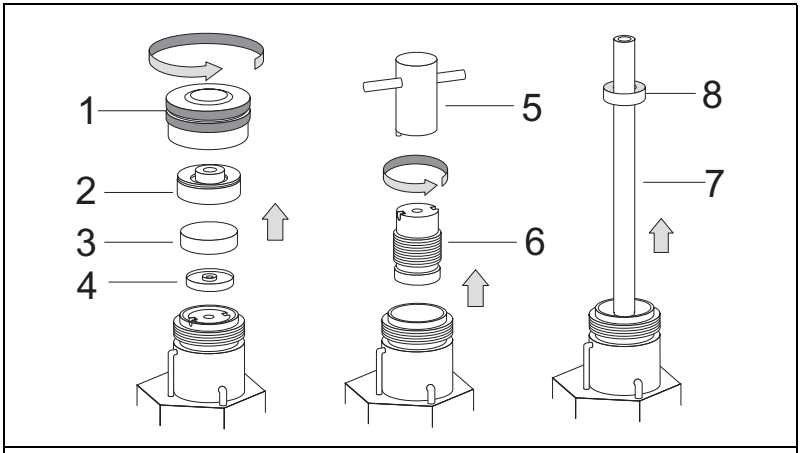

1. Injector Cap	2. Septum Holder
3. Septum	4. Septum Support
5. Liner Cap Removing Tool	6. Liner Cap
7. Liner	8. Graphite Seal

Figure 15-20. Removing the S/SL Injector Top Components

1. Unscrew the injector cap.
2. Remove the septum holder with septum. then the septum support.
3. Remove the liner cap by using the tool provided.
4. Use tweezers to remove the liner with the graphite seal.

Removing the S/SL Injector Bottom Components

With reference to Figure 15-21 proceed as follows:

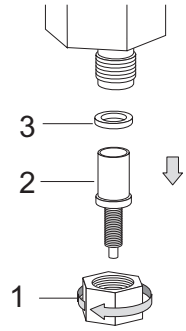

1. Terminal Fitting Retaining Nut 2. Terminal Fitting
3. Silver Seal

Figure 15-21. Removing the S/SL Injector Bottom Components

5. Unscrew the retaining nut at the bottom of the injector.

6. Remove the terminal fitting and the silver seal.

Installing the Metal Liner

With reference to Figure 15-22 proceed as follows:

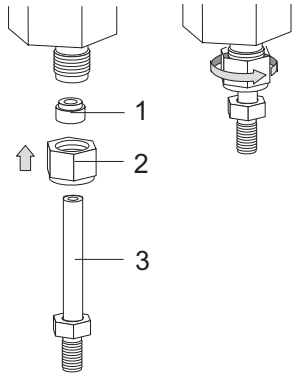

1. Ferrule 2. Retaining nut
3. Metal Liner

Figure 15-22. Metal Liner Installation

7. Slide the appropriate nut and ferrule onto the metal liner, then insert it into the bottom of the injector.

8. Push the metal liner into the injector as far as possible.

9. Slide the ferrule up the injector base then finger-tighten the retaining nut until it starts to grip the metal liner.

10. Slide the appropriate graphite seal and push it onto the metal liner from the top of the injector by using the appropriate tool as shown in Figure 15-23.

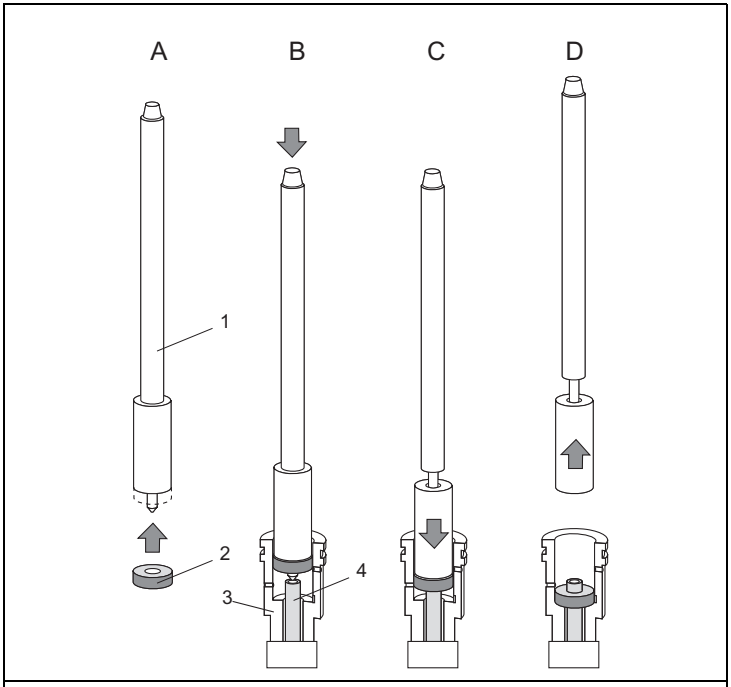

1. Graphite Seal Installation Tool	2. Graphite Seal
3. S/SL Injector	4. Metal Liner

Figure 15-23. Graphite Seal Installation Tool

Connecting the Glass Packed Column

With reference to Figure 15-24 proceed as follows:

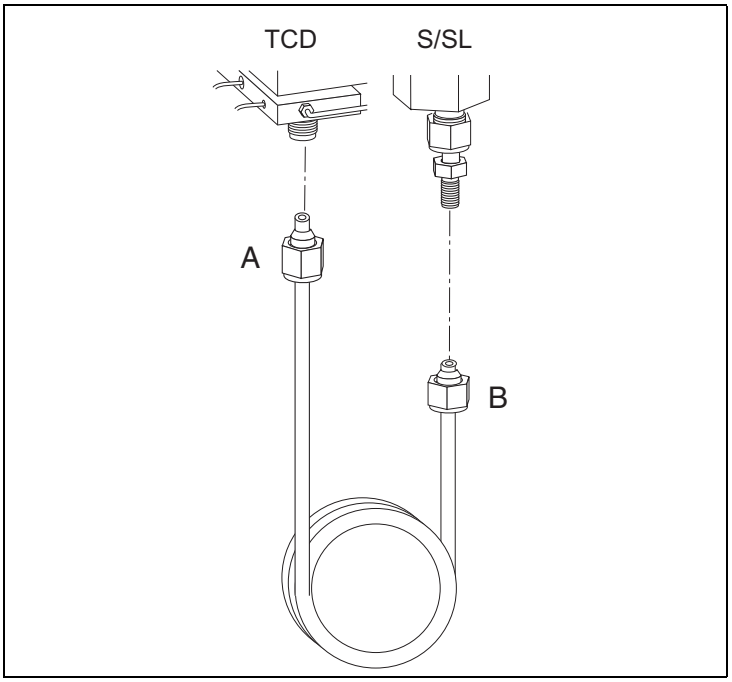

Figure 15-24. Connecting the Glass Packed Column

11. Make sure that your packed column has been correctly prepared as described in the *Preparing a Glass Packed Column* operating procedure on page 284.

12. Insert the column end A into the detector body and connect the column end B to the metal liner paying attention that the column end A touches the bottom

13. Finger-tighten the column ends A and B retaining nuts until they start to grip the column.

14. Finger-tighten the metal liner retaining nut.

CAUTION **Overtightening the compression ferrule does not necessarily produce a stronger, leak-free joint. In fact, very often the reverse is true. Overtightening can cause a leak**

in the joint and make it very difficult to reseal that particular joint when changing columns.

Reinstalling the S/SL Top Components

With reference to Figure 15-25 proceed as follows:

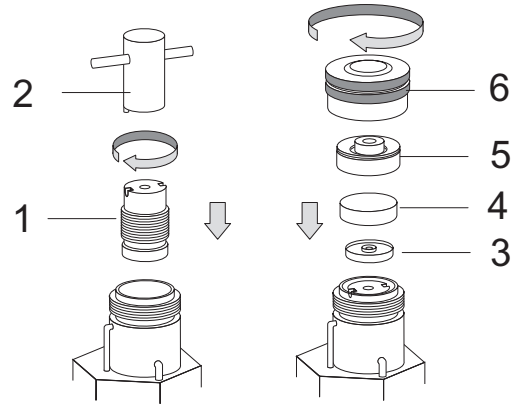

1. Liner Cap	2. Liner Cap Removing Tool
3. Septum Support	4. Septum
5. Septum Holder	6. Injector Cap

Figure 15-25. Reinstalling the S/SL Injector Top Components

15. Reinstall and tighten the liner cap until it start to grip the graphite seal.

16. Reinstall the septum support, septum, septum holder then screw the injector cap.

Keeping Leaks Under Control

This paragraph describes the automatic and manual operations needed to keep under control tightness of your GC system.

DPFC-equipped System

TRACE GC equipped with a DPFC (Digital Pressure Flow Control), features a series of automatized operations that make easier the task of keeping under control the tightness of your system.

The circular sequence *Automatic Leak Check*, *Manual Check for Leaks - Column Evaluation - Automatic Leak Check* is the key for minimizing trouble related to leaks.

Automatic Leak Check

When you perform an *Automatic Leak Check* (refer to *Performing an Automatic (DPFC) Leak Check* operating sequence, on page 300.), the GC measures the column flow with a true mass flow sensor and compares it to the calculated flow from the original column constant to see if the numbers match. The instrument assumes a gas leaks exists if there is a change and notify you that the system is not leak tight.

When the *Automatic Leak Check* highlights leaks you should perform a manual leak check, to determine the location of the leaks following the instructions reported in Chapter 8 of the *TRACE GC Maintenance and Troubleshooting Manual*.

You should execute the *Automatic Leak Check*:

- once a day
- every time you have disconnected the gas lines for any reason (e.g. to clean or replace a component of the system or to install a new column).

NOTE Only a previous *Column Evaluation*, performed in a condition of true tightness, can ensure the validity of the subsequent *Automatic Leak Check* responses.

Column Evaluation

For *pressure controlled* injectors (S/SL, OCI, PTV and PPKD in wide bore mode), the indirect column flow control by automatic pressure programming relies on the calculation and predetermination of a *column constant.* The *column evaluation* is an automatic measurement of the column resistance that determines the *column constant*.

Once the leak has been removed and the tightness of the system is reasonably sure, you should perform the *Column Evaluation* automatic control and compare the response with the *K Factor* values reported in *K-Factor Quick Reference* card. If the value obtained does not agree with the one reported on the card, this means that the leaks have not been repaired.

Performing the *Column Evaluation* is the necessary condition for the success of any subsequent *Automatic Leak Check*.

Perform the *Column Evaluation* following the instructions reported in *Performing a Column Evaluation* operating sequence on page 298.

Non-DPFC-equipped System

To keep under control the tightness of a non-DPFC equipped GC, you should check the system for leaks with a periodicity of at least a week following the instructions reported in Chapter 8 of the *TRACE GC Maintenance and Troubleshooting Manual*.

In addition, you should perform the same test every time you disconnect the gas lines for any reason (e.g. to clean or replace a component of the system or to install a new column).

OPERATING SEQUENCE

Manual Checking for Leaks

Before you begin this sequence, you must install the column into the injector, but not into the detector base body.

Materials needed:

- silicon rubber septum of any dimension

1. Carefully push the detector end of the capillary column into the rubber septum to seal it.
2. Close off splitting and purge valves on the injector.
3. Increase the carrier gas pressure to 150–200 kPa and allow the column and injector pressure to stabilize. This can take up to 30 seconds.
4. Reduce the pressure to 50 kPa.
5. Observe the actual pressure. In a leak-tight system, the pressure should not drop more than 1 kPa/minute.
6. If your installed column is leak tight, remove the septum and prepare the end of the column for installation into the detector.
7. If it is not leak tight, check the tightness of the column ferrule and repeat the leak check sequence.

OPERATING SEQUENCE

Performing a Column Evaluation

To perform the column evaluation, the system uses the correlation between the applied pressure to the flow and the column temperatures. This operation must be carried out every time a new column is installed. Before performing the column evaluation, a *manual* leak test of the system must be carried out.

CAUTION **Before performing Column Evaluation, carry out the leak check following the instruction reported in the *TRACE GC Maintenance and Troubleshooting Manual*.**

The GC must not be performing a run and must be isothermally stable before you can perform a column evaluation.

1. Press **COLUMN EVAL** to open the following menu:

```
      EVALUATE COLUMN?
Exit w/o evaluation
Eval Right column[1]
Eval Left column[1]
```

1. This item appears if the relevant channel is present and configured.

2. Scroll to the `Right` or `Left column` to evaluate and press **ENTER**. The column evaluation is automatically performed.

NOTE To exit **`Column Evaluation`** menu without performing column evaluation, scroll to `Exit w/o evaluation` and press **ENTER.**

3. During the routine, you can only visualize the actual values of oven temp, pressure and column flow.

```
   EVALUATING R/L COLUMN
Oven temp            (52)
 Pressure            (21)
Col. flow            (08)
   Use <Stop> to abort
```

NOTE To abort column evaluation, press **STOP.** A relevant message will be displayed.

4. After a few minutes, the following message will be displayed if the operation was successful. Compare the response with the K Factor values reported in the *K Factor Quick Reference* card according to the carrier gas used.

```
     R/L.COL.EVALUATION
        COMPLETED
       SUCCESSFULLY
        K. --------
```

5. If the value obtained does not agree with the one reported on the *K Factor Quick Reference* card, this means that leaks have not repaired.

CAUTION **The K factor values reported on the K Factor Quick Reference card are expected K factors for columns of exact dimensions. The K factors produced by you may vary somewhat. Large variations from the chart however will indicate a plugged column (high K constant) or a leak in the system (low K constant).**

NOTE Performing the Column Evaluation is the necessary condition for the success of any subsequent Automatic Leak Check.

6. In case of error, the relevant error message will be displayed.

OPERATING SEQUENCE

Performing an Automatic (DPFC) Leak Check

After you install a column and perform a manual leak check (as described on the *Maintenance and Troubleshooting Manual*) and column evaluation, you can use the automatic leak check function at any time in the future to check for leaks.

1. To start the leak check, press **LEAK CHECK**. The options you can select (`Right column` or `Left column`) depend on the configuration of your GC.

```
     LEAK CHECK COLUMN?

Exit w/o Leak check
Eval Right column[1]
Eval Left column[1]
```

1. This item appears if the relevant channel is present and configured.

2. Scroll to the desired channel and press **ENTER** to start. The channel selected is automatically pressurized with carrier gas and sealed to perform the leak check.

NOTE To exit **`Leak Check`** menu without performing leak check, scroll to `Exit w/o Leak check` and press **ENTER.**

3. During the routine, you can only visualize the actual values of oven temp, pressure and column flow.

```
    R/L.COL. LEAK CHECK

Oven temp              (52)
Pressure               (21)
Col. flow              (08)
   Use <Stop> to abort
```

NOTE To abort leak check, press **STOP.** A relevant message will be displayed.

4. After a few minutes, the following message will be displayed if the operation was successful.

```
R/L.LEAK CHECL
COMPLETED
SUCCESSFULLY
Leak check passed.
```

If not, an error message displays and you must search for leaks, then repeat the leak check.

Column Conditioning

CAUTION **When conditioning a column, remove the column from the detector base body. If this is not possible, such as when using packed columns, you must remove the detector and jet, if present, from the detector base body.**

Column conditioning consists of passing a carrier gas flow through the column and heating the column to a temperature 20–50 °C above the maximum temperature that will be used for running analyses, provided that temperature is within the operating range of the column.

For detailed information on column conditioning of your specific column, refer to the column manufacturer's instructions.

SECTION V

Detectors

This section contains information about detector configuration and operation.

Chapter 16, *Detector Overview*, gives basic information about the detectors available with the TRACE GC.

Chapter 17, *Flame Ionization Detector (FID)*, describes the operating principles and sequences for the Flame Ionization Detector (FID).

Chapter 18, *Electron Capture Detector (ECD)*, describes the operating principles and sequences for the Electron Capture Detector (ECD).

Chapter 19, *Nitrogen Phosphorus Detector (NPD)*, describes the operating principles and sequences for the Nitrogen Phosphorus Detector (NPD).

Chapter 20, *Photoionization Detector (PID)*, describes the operating sequences and principles for the Photoionization Detector (PID).

Chapter 21, *Flame Photometric Detector (FPD)*, describes the operating principles and sequences for the Flame Photometric Detector (FPD).

Chapter 22, *Thermal Conductivity Detector (TCD)*, describes the operating principles and sequences for the Thermal Conductivity Detector (TCD).

Chapter 23, *Pulsed Discharge Detector (PDD)*, describes the operating sequences and principles for the Pulsed Discharge Detector (PPD)

16

Detector Overview

This chapter gives basic information about the detectors available with the TRACE GC.

Chapter at a Glance...

Operating Sequences

Detector Configuration

The following detectors are available for the TRACE GC:

- Flame Ionization Detector (FID)
- Electron Capture Detector (ECD)
- Nitrogen Phosphorus Detector (NPD)
- Photoionization Detector (PID)
- Flame Photometric Detector (FPD)
- Thermal Conductivity Detector (TCD)
- Pulsed Discharge Detector (PPD)

The TRACE GC detectors are available with the gas regulation modules in both DGFC and non-DGFC versions. The TRACE GC can be configured for up to three detectors of different types.

Each detector is installed on the proper left or right detector base body (**`LEFT DETECTOR`**, **`RIGHT DETECTOR`**) . The third, or auxiliary, detector can be installed and configured as *Auxiliary* (**`AUX DETECTOR`**) to allow the following possible configurations.

- *Stacked Analytical Configuration*
- *Dual FPD (twin tube) Configuration*
- *Third Detector Base Body Configuration*

For further details refer to paragraph *Auxiliary Detectors* on page 313.

Each detector is controlled by an electronic board inserted into the appropriate slot (A, B, or C) in the electronic compartment of the GC. The type of detector and the make-up gas are already configured. Each detector can be configured for a specific make-up gas depending on the analytical requirements.

Detector Base Body

The detector options are fully and easily interchangeable because of *base bodies* that act as a bridge between the detector and analytical column.

The detector base body is available in two configurations:

- detector base body for packed columns.
- detector base body for capillary columns.

Packed Column Detector Base Body

This detector base body, shown in Figure 16-1, accepts glass and metal packed columns with outside diameters of up to 6 mm or 1/4 inch. The column enters the compartment right up to the base of the detector jet which sits at the top of the base body. Hydrogen and make-up gas flow past the end of the column. This minimizes dead volumes and column band broadening.

Capillary Column Detector Base Body

This detector base body, shown in Figure 16-2, can accept all types of capillary columns. The column enters the detector jet directly to eliminate any dead volumes. The base body allows columns to be connected using either M4 or M8 1 mm fittings.

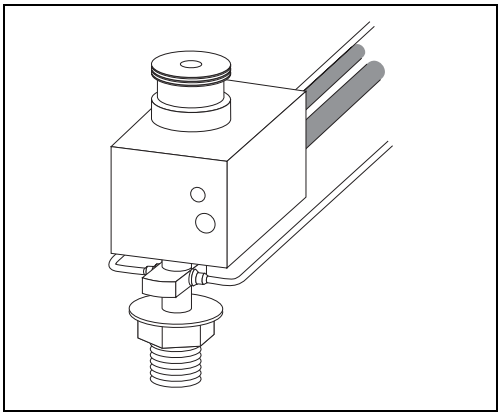

Figure 16-1. Packed Column Base Body

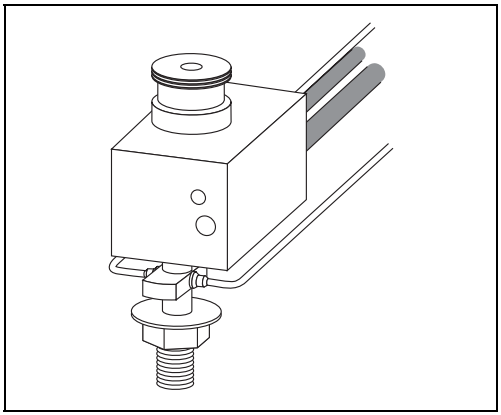

Figure 16-2. Capillary Column Base Body

Detector Gases

If your GC is configured for Digital Gas Flow Control (DGFC), the GC automatically recognizes the detectors and detector gas modules installed. Different gas flow modules can be used for different detectors, but some detectors, such as the TCD, require specific modules. For more information about the different DGFC modules, refer to *Plumbing Detector Gases* on page 308.

If your GC is configured for non-DGFC gas control, you must control the detector gases manually.

The detector pneumatic control module supports up to four different modules, as shown in Table 16-1.

Table 16-1. Detector Module Gas Paths

	Detector Gas Path		
Controlled Module	**Hydrogen**	**Air**	**Make-up**
Type AA	—	—	X
Type AB	X	X	—
Type AC	X	X	X
Type AD	X	X	X

Plumbing Detector Gases

Different detector modules have different gas plumbing requirements. It is important that you connect the right gases to the right inlet fittings. The inlet fittings on the detector modules are labeled. To ensure that you have the detector gases properly connected, do the following:

1. Press **INFO/DIAG** twice to enter the **`DIAGNOSTICS`** menu.
2. Scroll to `Hardware config` and press **ENTER**.
3. In the **`HARDWARE CONFIG`** submenu, scroll to `L Det module`, `R Det module`, and `Aux Det module` (if configured) and note the module type.

4. Consult Table 16-2 for the proper gas connections of the detector modules installed.

WARNING! Hydrogen is a potentially dangerous gas. Always perform a leak check of the hydrogen gas line. Refer to *Using Hydrogen* on page xl for safety information.

Table 16-2. Detector Gas Connections

Detector	Installed Module	Connect Hydrogen to	Connect Air to	Connect Make-up Gas to[1]	Connect Sheath Gas to[2]	Connect Reference Gas to	Helium from purifier
FID	**AB**	Gas 2	Gas 1	—	—	—	
	AC	Gas 2	Gas 1	Gas 3	—	—	
	AD	Gas 3	Gas 1	—	—	—	
ECD	**AA**	—	—	Gas 3	—	—	
	AB	—	—	Gas 2	—	—	
	AC	—	—	Gas 3	—	—	
	AD	—	—	Gas 3	—	—	
NPD	**AD**	Gas 2	Gas 1	Gas 3	—	—	
PID	**AB**	—	—	Gas 2	Gas 1	—	
	AC	—	—	Gas 3	Gas 1	—	
	AD	—	—	Gas 3	Gas 1	—	
FPD	**AB**	Gas 2	Gas 1	—	—	—	
	AC	Gas 2	Gas 1	Gas 3[3]	—	—	
	AD	Gas 3	Gas 1	—	—	—	
TCD	**AB**	—	—	Gas 2	—	Gas 1	
PDD	**dedicated**						Inlet

1. For ECD detectors, the makeup gas is N_2 or 5% Ar/CH_4.
2. For PID detectors, the sheath gas is N_2 or He.
3. FPD applications typically do not require Make-up gas.

Make-up Gas

Most detectors require an auxiliary gas flow to improve sensitivity and peak shapes. This *make-up* gas helps to rapidly sweep the compounds from the column through the detector. The make-up gas you use depends on the detector. The `Make-up gas` parameter of the detector menu changes depending on your GC's configuration.

Detector and Make-up Gas Configuration

You configure the detectors and make-up gases in the **CONFIGURE** menu. The **LEFT** and **RIGHT DETECTOR** menus change to reflect the choices you make in the **CONFIGURE** menu.

Press **CONFIG**, then scroll to `Left Detector` or `Right detector` and press **ENTER** to open the detector gas menu.

Table 16-3. Configure Detector and Make-up Gas Menu

Menu	Submenu	Comments
LEFT DETECTOR		This line is the menu title bar.
Detector type	DETECTOR TYPE * XXX-A < --------- None	This indicates the type of detector mounted and the slot position (A, B, or C) of the relevant electronic control board. Select `Detector type` and press **ENTER** to display the submenu. An asterisk appears beside the detector selected.
Makeup gas	MAKEUP GAS (XX) * Helium < Nitrogen Hydrogen Argon Methane 5% Argon None	This line appears only if the DGFC module is present. The type of make-up gas currently used for the detector is shown. Different suitable make-up gases may be selected depending on the type of detector installed. Table 16-4 shows the commonly-used make-up gases. Select `Makeup` and press **ENTER** to open the **MAKEUP GAS** submenu. Only the gases applicable to the detector in use are displayed. In the submenu, an asterisk appears beside the currently-active make-up gas. The active make-up gas is also displayed in parentheses in the menu title bar.

Table 16-4. Make-up Gases

		Detector					
		FID	ECD	NPD	PID	FPD	TCD
Gas	Helium	X		X	X	X	X
	Nitrogen	X	X	X	X	X	X
	Hydrogen	---	---	---	---	---	X
	Argon/5% Methane	---	X	---	---	---	
	Argon	---	---	---	---	---	X

OPERATING SEQUENCE

Configuring the Detector and Make-Up Gas

1. Press **CONFIG** and scroll to `Left Detector` or `Right Detector`, depending on the location of the detector you want to configure.

2. Select `Detector type` and press **ENTER**.

3. To change the detector type, scroll to the desired detector and press **ENTER** to confirm the selection. An asterisk appears beside the detector selected.

   To deactivate the detector, scroll to `None` and press **ENTER**.

4. If the DGFC module is present, scroll to `Makeup` and press **ENTER**. The gases applicable to the detector in use are displayed.

   An asterisk appears beside the currently active make-up gas. The active make-up gas is also displayed in parentheses in the menu title bar.

5. To change the make-up gas, scroll to the desired gas and press **ENTER**. An asterisk appears beside the make-up gas selected.

   To deactivate the make-up gas, scroll to `None` and press **ENTER**.

Auxiliary Detectors

A detector is considered as *auxiliary* when it is not installed on the standard left or right detector base body position. The possible auxiliary detector configurations are the following.

Tandem (Stacked) Configuration

If you are using an ECD, which is a non-destructive detector, you can stack an *auxiliary* detector on top of it to operate in series. To stack an FID, NPD or FPD on top of the ECD, you must install a specially heated series adapter, as shown in Figure 16-3.

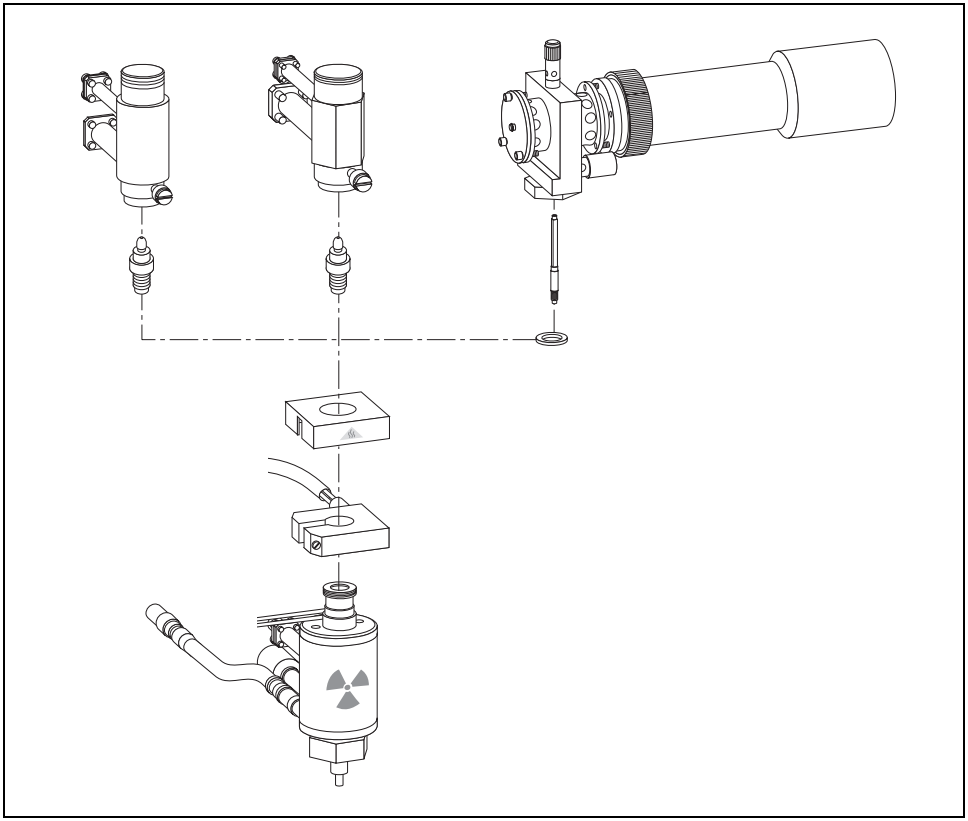

Figure 16-3. FID, NPD and FPD Series Connections to an ECD

The fuel gas for the auxiliary detector is supplied from an additional pneumatic module, DGFC or non-DGFC, fitted in the pneumatic chamber. Your TRACE GC must be pre-configured at the factory if you plan to use an auxiliary detector.

Dual FPD Configuration

If you are using an FPD, you can expand it by connecting a second photomultiplier tube with different interferential filter on the same detector body. This allows to process a sample for phosphorous and sulphur (or tin) profiles simultaneously.

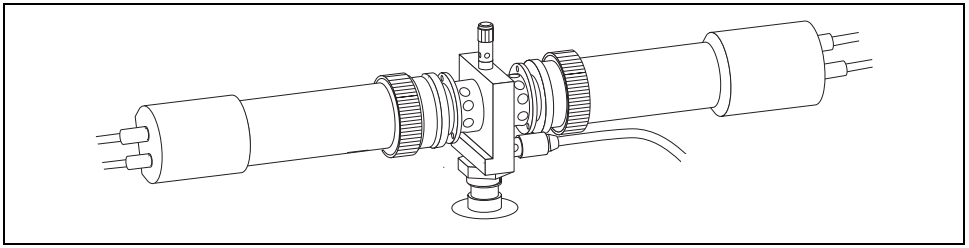

Figure 16-4. Dual FPD Configuration (Twin Tube)

In this configuration the FPD detector, already installed on the proper detector base body, is configured as **`LEFT`** or **`RIGHT DETECTOR`** while the second photomultiplier tube must be configured as **`AUX DETECTOR`**.

Note that the temperature and detector gases setpoints are common for both the photomultiplier tubes.

Third Detector Base Body

This configuration allows to install the third detector over an additional base body installed instead of an injector.
This configuration is permitted only for FID, NPD or PID.

OPERATING SEQUENCE

Configuring an Auxiliary Detector

Use the following sequence to configure an auxiliary detector and make-up gas.

1. Press **CONFIG** and scroll to `Auxiliary detector`.

NOTE The `Auxiliary detector` item will only be present in the **`CONFIGURE`** menu if your TRACE GC system has been pre-configured at the factory for an auxiliary detector.

2. Scroll to `Detector type` and press **ENTER**.
3. In the **`DETECTOR TYPE`** submenu, scroll to the type of detector you want to use and press **ENTER**. Select `None` to deactivate the auxiliary detector.
4. If required, scroll to `Makeup gas` and press **ENTER**.
5. In the **`MAKEUP GAS`** submenu, scroll to the make-up gas you want to use with the auxiliary detector and press **ENTER**. Select `None` to deactivate the auxiliary detector makeup gas.

OPERATING SEQUENCE

Programming the Auxiliary Detector

Use the following sequence to set the parameters in the **AUXILIARY** menu.

1. Press **AUX**.
2. Scroll to `Detector` and press **ENTER** to display the **AUX DETECTOR** menu.
3. Configure the detector parameters in the menu. The **AUX DETECTOR** menu contains the same parameters as the **LEFT** and **RIGHT DETECTOR** menus. The parameters will change depending on the type of auxiliary detector you are configuring.

The parameters for the FID are described in *FID Menu* in Chapter 17.
The parameters for the NPD are described in *NPD Menu* in Chapter 19.
The parameters for the FPD and Dual FPD are described in *FPD Menu* in Chapter 21.

Detector Signal Menu

The **DETECTOR SIGNAL** menu contains the parameters that control the detector signal. As compounds elute from the column and enter the detector, an electrical signal is generated. The size of the signal is related to the amount of the corresponding compounds. The detector's electronics process the signal and send it to a recording device. The plot of the signal size versus the time results in the chromatogram.

Press **LEFT SIGNAL** or **RIGHT SIGNAL** to display the **SIGNAL** menu shown in Table 16-5. The **AUX SIGNAL** menu is identical to the **LEFT** and **RIGHT SIGNAL** menus.

Table 16-5. Detector Signal Menu

Menu	Range	Comments
LEFT SIGNAL (XXX)		This line is the title bar. The detector type is indicated in parentheses (XXX).
Output	Not editable	This is the actual electrometer output signal expressed in µV. The Autozero function forces this value to 1000 corresponding to the zero level of the baseline on a recording device. You cannot enter a setpoint here.
Offset	Variable, depending on detector output	This is a value in counts that may be subtracted from the Output signal to adjust the baseline level. This parameter may be manually or automatically set using the Auto zero function. The range of the suppression is variable and related to the output signal.
Auto zero?	Yes/No	This function forces the output signal to 1000 (zeroing). Press **YES** to zero the detector signal. The Auto zero in progress message is displayed.

Table 16-5. Detector Signal Menu (Continued)

Menu	Range	Comments
`Range 10^ (0...3)`[1]	10^0–10^3 (1, 10, 100, 1000 nA) for FID, NPD, PID and PDD 10^0–10^2 (1, 10, 100 nA) for FPD	This parameter sets the electrometer amplifier input range. 10^0 is the most sensitive.
`Gain (x1 or x10)`[2]	x1, x10	This parameter allows you to increase the amplifier gain by a factor of 10.
`Neg. polarity`[2]	Yes/No	This parameter allows you to reverse the polarity of the signal as a function of the thermal conductivity of the carrier gas.
`Analog filter`[2]	On, Off	This parameter allows output signal filtering to minimize the noise of the baseline. Press **ON** to enable the filtering. This also increases the response time of the detector.
`Baseline comp`	On, Off	This parameter allows the baseline compensation. This function is used when the subtraction of the baseline from the output signal is required; e.g. to subtract a blank analysis from the current one. When **ON**, it is enabled. When **OFF** it is no enabled. Depressing **MODE/TYPE**, the menu will be opened for setup. Refer to *How to Use Baseline Compensation* operating sequence.

1. This line is not displayed for the ECD or TCD.
2. This line is displayed only for the ECD, FPD and TCD.

NOTE With **FID** and **PDD** if the `Range 10^` is set 2 or 3, the small variation of the output signal is not detected. For this reason, the, `Signal pA`, `Ign. thresh` and `Flameout retry` parameters will be not displayed in the **`DETECTOR FID`** menu and the `Signal pA`, parameter will be not displayed in the **`DETECTOR NPD, PID, PDD`** and **`FPD`** menus.

OPERATING SEQUENCE

How to Use Baseline Compensation

Use the following sequence to use baseline compensation parameter.

1. Scroll to `Baseline comp` and turn it **ON**.
   Press **MODE/TYPE** to enter Baseline Compensation menu.

```
        BASELINE COMP

Setup comp run              <
Start com run
Setup comp output
```

2. Select `Setup comp run` to define which detector baseline must be storage.
   Press **ENTER**, the following submenu is displayed

```
        BASELINE COMP

Run R det comp            On<
Run L det comp            On
Run Aux comp[1]           Off
```

1. This line is displayed only when Auxiliary Detector is configured.

3. Turn on the required detector compensation. Up to three detectors compensation can be simultaneously carried out.

4. Select `Start comp run` to begin baseline compensation.
   Press **ENTER**, the following message is displayed.

```
      Baseline comp run
        in progress

       Collecting Data
```

NOTE The start for baseline compensation must be programmed also through the sequence programming, or through the Clock Table Programming.
For details, refer to *The Clock Table* in Chapter 26.

5. Select `Setup comp output` to define the detector output from which the baseline must be subtracted. Press **ENTER**, the following submenu is displayed.

```
      SUBTRACTED OUTPUT

Right detector          On <
Left detector           On
Aux detector[1]         Off
```

1. This line is displayed only when Auxiliary Detector is configured.

6. Turn on the detector from which the baseline must be subtracted from the output. Up to three detectors can be set.

NOTE The start for baseline subtraction must be programmed also through the sequence programming, or through the Clock Table Programming.
For details, refer to *The Clock Table* in Chapter 26.

17

Flame Ionization Detector (FID)

This chapter describes the Flame Ionization Detector (FID). Due to its high sensitivity, good operational stability, and wide linear response, the FID remains the most popular detector for gas chromatography.

Chapter at a Glance...

Operating Procedures

FID Overview

In the FID, the effluent from the column is mixed with hydrogen and burned in a stream of air as it emerges from the jet. The jet acts as a polarizing electrode, while the metal collar surrounding the flame forms the collecting electrode.

A polarizing voltage is applied across the electrodes from the electrometer unit to accelerate and collect the ions that are generated during the combustion process of

organic compounds. The resulting ionization current is sensed by an electrometer amplifier and converted to a suitable output signal. Figure 17-1 shows the FID.

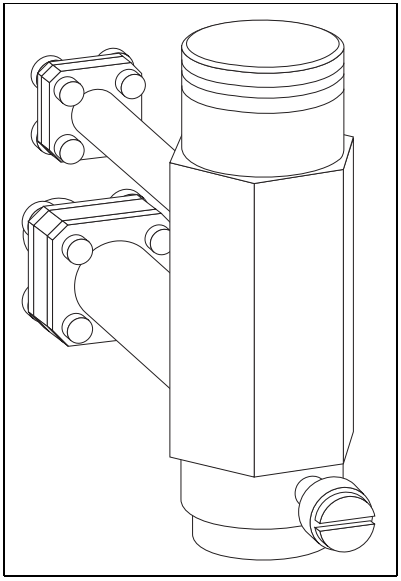

Figure 17-1. Flame Ionization Detector

Jet

The flame jet, mounted on the detector base body for capillary, wide-bore, or packed columns, is suitable for operating temperatures of up to 450 °C. It has ceramic insulation.

Selectivity

The FID responds to almost all organic compounds containing a carbon-hydrogen bond. The detector does not respond, or responds minimally, to a number of compounds such as permanent gases, oxides of nitrogen, sulfur compounds, ammonia, and water.

Temperature

The detector base body heats the FID. Its exact temperature is not critical. It only has to be sufficiently high to prevent condensation of the water vapor formed as a

result of the hydrogen combustion of the flame. It cannot be used with a detector base body temperature of less than 150 °C. The TRACE GC 2000 will not allow flame ignition to proceed at temperatures less than 150 °C. The base body temperature is normally set to the upper temperature limit of the column in use.

FID Gas Supplies

The stability and analytical performance of the FID is greatly affected by the flow of the various gases through the detector.

The gases normally used with the FID are shown in Table 17-1.

Table 17-1. FID Carrier Gases.

Carrier Gas	Capillary Columns	Packed Column
Helium	X	X
Nitrogen	X	X
Hydrogen	X	
Argon		X

The carrier gas flow range depends on the type of gas used and on the type and diameter of the capillary or packed column installed.

The fuel and make-up gases used for the FID are:

- fuel gas:hydrogen and air
- make-up gas:nitrogen (recommended) or helium

NOTE Make-up gas is not required when a packed column is used.

The recommended ranges of detector gas flow rates tolerated by the FID are:

- hydrogen:30–50 mL/min
- air:300–600 mL/min
- make-up gas:10–60 mL/min

NOTE Usually the air flow is about ten times the hydrogen flow to keep the flame lit.

To gain optimal performance from the FID, you should experiment with the hydrogen flow rate, keeping the carrier and air flows constant, to obtain the maximum signal intensity for the components of interest.

For high sensitivity applications, it is essential to exclude all traces of organic contamination from the chromatographic system and/or detector gas lines. Such contamination may create ghost peaks in the chromatogram or, more often, an unstable baseline. Table 17-2 shows typical FID operating conditions.

Table 17-2. Typical FID Operating Conditions

Parameter	Capillary Columns	Packed Columns
Base temperature	250 °C	250 °C
Carrier	2 mL/min	40 mL/min
Hydrogen	35 mL/min	40 mL/min
Air	350 mL/min	500 mL/min
Make-up gas (Nitrogen)	30 mL/min	Not used

FID Installation

This operation allows the correct installation of the FID on your TRACE GC.

Material required

- Jet for FID
- Tool for jet

1. Place the jet into the detector base body housing and tighten it with the proper tool. Ensure the jet is perfectly vertically aligned to avoid damaging its ceramic part.

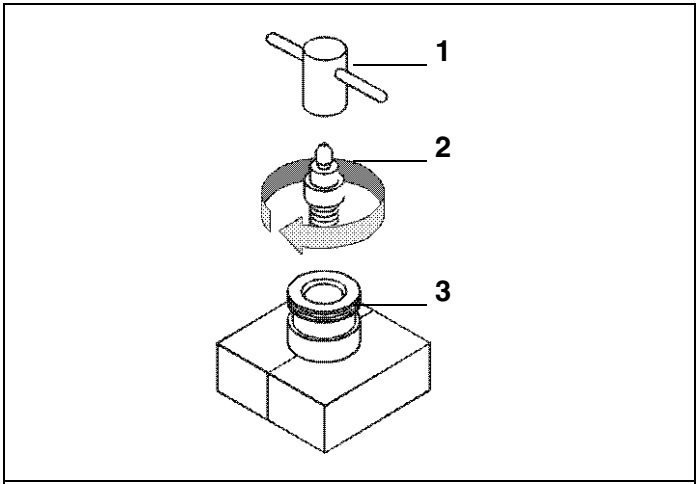

1. Tool for jet
2. Jet
3. Detector base body

Figure 17-2. Jet for FID

2. Install the FID on the detector base body and secure it by using the fixing screw on the front of the detector cell.

3. Carefully, connect the signal and ignition polarization cables coming from the detector control card, to the detector cell.

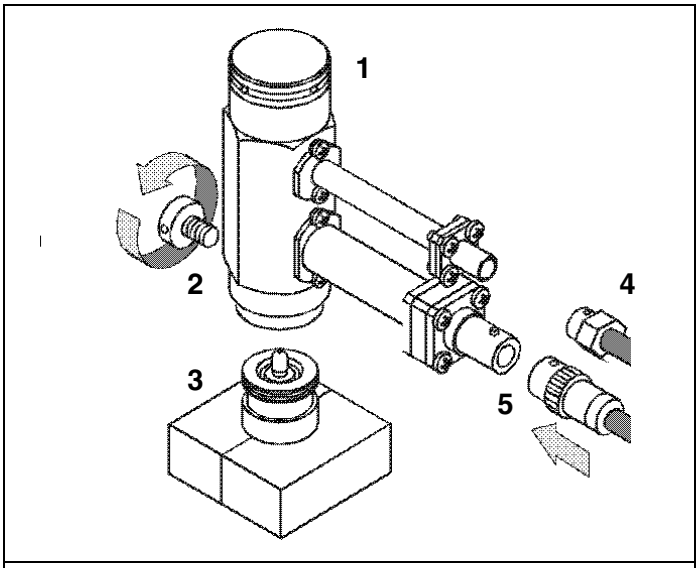

1. FID	2. Fixing screw
3. Detector base body	4. Signal cable
5. Ignition polarization cable	

Figure 17-3. Installation of the FID

FID Menu

The **`DETECTOR (FID)`** menu contains the detector control parameters if the GC has been configured for an FID. Press **LEFT DETECTOR** or **RIGHT DETECTOR** to open the menu shown in Table 17-3.

Table 17-3. Detector (FID) Menu

Menu	Range	Comments
`RIGHT DET (FID)`		This line is the title bar.
`Flame`	On/Off	This indicates the flame status: On, Off, Igniting, or Out. Hydrogen and air flows are required to light the flame. Press **ON** to turn on the hydrogen and air flows. This happens only if the `Base temp` is ≥ 150 °C. If not, an error message is displayed. The `Igniting` message is displayed during the flame ignition sequence. The `Out` message is displayed when the flame is inadvertently extinguished. The **Not Ready** LED will be lit and the hydrogen and air supplies will automatically turn off. Refer to *Flame Out Conditions* on page 329 for more information. Press **OFF** to turn off the hydrogen and air flows.
`Base temp`	On/Off, 50–450 °C	This indicates the detector base body temperature. Press **ON** to turn on the heater and display the actual and setpoint values. Press **OFF** to turn off the heater and display the actual value.
`Signal pA`	Not editable	This parameter shows the collector current in picoamperes (standing current level). The displayed value is also used to indicate the flame status. If the value is very low (such as 0.3 pA), the flame is off. When the value displayed is greater than the `Ignition threshold`, the flame is on.

Table 17-3. Detector (FID) Menu (Continued)

Menu	Range	Comments
`Ignition thresh`	0.0–9.9 pA	The FID produces a small signal current when lit. This parameter defines the flame on condition. The TRACE GC uses this value to determine flame status (on or off) and control automatic re-ignition. If `Flameout retry` is `On`, the flame will re-ignite if the signal drops below this value.
`Flameout retry`	On/Off	This indicates re-ignition status. Press **ON** to program when the flame re-ignition should be attempted. Refer to *Flame Out Conditions* for more information.
`H2`[1] `Air`[1]	On/Off, 0–200 mL/min for H_2 On/Off, 0–600 mL/min for Air	These indicate the hydrogen and air flow supplied to the detector. Press **ON** to turn on the gas flows and to display the actual and setpoint values. Press **OFF** or **0** to turn off the flows and to display the actual value. These flows can be turned on independently when the flame is off, but they are cut off when the flame is turned off, or when the FID fails the ignition sequence. If you have a non-DGFC module, the actual values are not displayed, and you can only turn the flows on and off.
`Mkup`[1] `(XX)`	On/Off, 0–100 mL/min	This indicates the make-up gas used with the FID. The type of gas is displayed in parentheses. Press **ON** to turn on the make-up gas flow and to display the actual and setpoint values. Press **OFF** or **0** to turn off the flow. The flow turns off during the flame ignition sequence, then it turns back on before the ignition threshold test. The flow remains turned on when the flame is turned off. If you have a non-DGFC module, the actual values are not displayed, and you can only turn the flows on and off.

1. If you have a non-DGFC module, the H_2, Air, and Make-up detector gases must be measured and adjusted manually from a pressure regulator located in the pneumatics. The range with the non-DGFC module is On/Off.

Flame Out Conditions

When the flame is accidentally extinguished, either permanently because of exhausted fuel gas supplies or temporarily, the `Flame Out` message is displayed in the menu and a message is recorded in the **Run Log**.

If the `Retry` function is turned `On`, the system will attempt to re-ignite the flame up to three times.

OPERATING SEQUENCE

Programming an FID with DGFC

Before you begin this operating sequence, do the following:

- Verify that all detector gases are connected, a column is correctly installed, and the system is free of leaks.
- Check the oven temperature and injector temperature.
- Check the carrier gas flow depending on the capillary or packed column in use.

WARNING! Hydrogen is a potentially dangerous gas. Refer to *Using Hydrogen* on page xl for safety information.

1. Press **LEFT DETECT** or **RIGHT DETECT** to open the **`DETECTOR (FID)`** menu.
2. Set the detector base body temperature. This must be greater than 150 °C to allow flame ignition.
3. Change the hydrogen flow rate, if desired, according to the analytical requirement.
4. Change the air flow rate, if desired, according to the analytical requirement.
5. Change the make-up gas flow rate, if desired. When a packed column is installed, the make-up gas is not used. Turn it `Off`.
6. When the detector base body is at the set temperature, scroll to `Flame` and press **ON**. This turns on the air and hydrogen flows and initiates the ignition

sequence. The signal increases after the ignition. A sudden baseline deflection indicates that the flame is lit inside the detector. After a few seconds, the baseline should stabilize to the standing current level of the system.

7. Press **LEFT SIGNAL** or **RIGHT SIGNAL** to open the **SIGNAL** menu and verify the output signal.

Refer to the *Setting the FID Signal Parameters* operating sequence on page 332 for instructions on setting the signal parameters.

OPERATING SEQUENCE

Programming an FID with Non-DGFC

Materials required:

- screwdriver
- bubble flow or electronic flow meter
- detector base body/flow meter adapter

Before you begin this sequence, do the following:

- Verify that all detector gases are connected, a column is correctly installed, and the system is free of leaks.
- Check the oven temperature and injector temperature.
- Check the carrier gas flow depending on the capillary or packed column in use.

WARNING! Hydrogen is a potentially dangerous gas. Refer to *Using Hydrogen* on page xl for safety information.

1. Loosen the fixing screw on the front of the detector cell and remove the detector.

2. Press **LEFT DETECTOR** or **RIGHT DETECTOR** to open the **DETECTOR (FID)** menu.

3. Set the detector base body temperature. This must be greater than 150 °C to allow the flame ignition.
4. Turn the air and make-up gas flows `Off`.
5. Turn the `Hydrogen` flow `On`.
6. Connect the flow meter to the detector base body using the adapter.
7. Measure the gas flow.
8. Adjust the gas pressure with the pressure regulator until the desired gas flow is achieved. Refer to Table 17-2 for the recommended flow rates.
9. Turn the hydrogen flow `Off`.

WARNING! Never measure air and hydrogen flow together.

10. Turn the `Air` supply `On`.
11. Measure the gas flow.
12. Adjust the gas pressure with the pressure regulator until the desired gas flow is achieved. Refer to Table 17-2 for the recommended flow rates.
13. Turn the `Air` flow `Off`.
14. Turn the `Makeup` gas flow `On`.
15. Measure the gas flow.
16. Adjust the gas pressure with the pressure regulator until the desired gas flow is achieved. Refer to Table 17-2 for the recommended flow rates.

NOTE A make-up gas is not used with a packed column. Turn it `Off` if you are using a packed column.

17. When the detector base body is at the set temperature, scroll to `Flame` and press **ON**. This turns on the air and hydrogen flows and initiates the ignition sequence. The signal increases after the ignition. A sudden baseline deflection

also indicates that the flame is lit inside the detector. After a few seconds the baseline should stabilize to the standing current level of the system.

18. If desired, press **LEFT SIGNAL** or **RIGHT SIGNAL** to open the **`SIGNAL`** menu and verify the output signal.

Refer to the *Setting the FID Signal Parameters* operating sequence on page 332 for instructions on setting the signal parameters.

OPERATING SEQUENCE

Setting the FID Signal Parameters

1. Press **LEFT SIGNAL** or **RIGHT SIGNAL** to enter the detector **`SIGNAL (FID)`** menu.
2. Scroll to `Range 10^ (0...3)` and set the electrometer amplifier input range. `0` (10^0) is the most sensitive.
3. Turn `Analog filter` **ON** if you want to filter the output signal.
4. Scroll to `Autozero` and press **ON**.
5. If offset is required, scroll to `Offset` and enter a numeric value or press **ON** to recall the last offset from memory.
6. Turn `Baseline comp` **ON** if you want to compensate the baseline.

NOTE If the `Range 10^` is set 2 or 3, the small variation of the output signal is not detected. For this reason, the, `Signal pA`, `Ign. thresh` and `Flameout rentry` parameters will be not displayed in the **`DETECTOR FID`** menu.

18

Electron Capture Detector (ECD)

This chapter describes the operating principles and sequences for the Electron Capture Detector (ECD).

Chapter at a Glance...

Operating Sequences

ECD Overview

The ECD has a low volume ionization chamber and increased contamination resistance which ensure high sensitivity and reliability. The detector consists mainly of a stainless steel cylinder housing a ^{63}Ni radioactive source.

The source acts as a cathode in the ionization cell while another cylindrical coaxial electrode acts as an anode (collecting electrode). Heat resistant material ensures effective insulation between the two electrodes and the detector body.

The detector is heated by a low voltage resistor controlled by an electronic thermoregulator. Figure 18-1 shows the ECD.

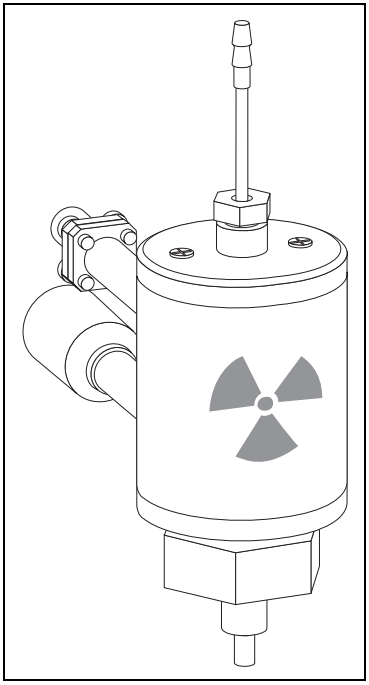

Figure 18-1. Electron Capture Detector

WARNING! The Electron Capture Detector (ECD) contains a ^{63}Ni beta-emitting radioactive source of 370 MBq (10 mCi).

The ^{63}Ni radioisotope, electrically deposited as metal on a nickel foil, is in a cylindrical source holder made of 6 mm stainless steel. This holder is fixed to the detector body, also made of stainless steel, to protect it and make it inaccessible from the outside.

The radioisotope is not released by its support at temperatures lower than 450 °C.

This temperature can never be reached by the detector, whose maximum operating temperature is 400 °C. A safety device (thermo-resistor regulator complying with standard DIN 43760) protects the detector and prevents overheating.

The normal operation of the detector does not involve any dispersion of solid or gaseous radioactive material, and therefore the risk of direct or secondary radiation (Bremsstrahlung) from the detector is practically nil.

The detector should never be opened or handled by the operator. Any maintenance or service operations involving even partial disassembling of the instrument must be performed ONLY by qualified personnel at a laboratory expressly authorized by ThermoFiinigan and specifically licensed to handle radioactive material.

Wipe Test

The ECD, before leaving the factory, is tested for surface contamination by means of a *wipe test* (leak test) method. Each detector is provided with a certificate reporting the sequence followed and the results of the values found.

NOTE The users of this detector in the United States are required to perform a wipe test on their ECD at intervals not to exceed 3 years (36 months) following the reported sequence. For other countries, please refer to the appropriate agency for their requirements.

ECD Gas Supplies

In the ECD cell, the ^{63}Ni source releases β particles that collide with the molecules of an easily ionizable carrier or make-up gas flowing through the detector to produce low energy electrons. The commonly used gases are nitrogen or argon/5% methane.

Argon/methane is recommended when a higher linear range is required or when contaminants in the carrier gas make a high mobility of electrons necessary to restore correct operating values. Both gases should be of high purity and must not contain more than 1–2 ppm of oxygen or water vapor, since their presence would

reduce the concentration of free electrons and therefore, the probability of capturing them.

The gases normally used with the ECD are shown in Table 18-1.

Table 18-1. ECD Carrier Gases

Carrier Gas	Capillary Columns	Packed Column
Helium	X	
Nitrogen	X	X
Hydrogen	X	
Argon/5% Methane		X

When using helium or hydrogen as a carrier gas with capillary or wide-bore columns, the detector should be fed with nitrogen or argon/methane through the make-up gas line.

WARNING! Hydrogen is a potentially dangerous gas. Refer to *Using Hydrogen* on page xl for safety information.

Operating Principle

The ECD operates according to the principle of gas phase absorption of free electrons by electron capturing molecules.

The primary electrons emitted by the radioactive source (beta emission) collide with the molecules of a carrier or make-up gas (such as nitrogen) and give rise to an ionization process with the formation of secondary electrons and positive ions [Equation (18-1)].

$$\beta^* + N_2 \Rightarrow \beta + N_2^+ + e^- \qquad (18\text{-}2)$$

A weak electrical field between the electrodes causes the electrons to collect rapidly at the anode and generate a small current (standing current). The possibility for *heavy* positive ions to recombine with electrons is negligible.

When an electron capturing substance passes through the detector cell, the current is reduced because of the absorption of electrons by this substance, according to one of the following reactions [Equations (18-2) and (18-3)].

$$e^- + AB \Rightarrow AB^- + h\nu \quad (18\text{-}3)$$

$$e^- + AB \Rightarrow A^{\cdot} + B^- \quad (18\text{-}4)$$

In Equation (17-2), an energized negative molecular ion forms, while in Equation (17-3), after the electron capture, the molecule dissociates (dissociative capture) generating a free radical $A^{\cdot}$ and a negative ion B^-.

The energy freed during the capture in Equation (18-2) is the measure of the electron affinity of the molecule.

The succession of phenomena determining the detector response ends with the neutralization of the negative ions formed by *capture*. The detector response is therefore related to the loss of electrons that occurs due to capture in the system.

The decrease in the electron concentration is converted into an electric signal proportional to the concentration of solute.

Molecular Structure and Detector Response

The sensitivity and selectivity of the ECD response are determined by the electron affinity of the substances entering the detection cell and are affected by the operating parameters and analytical conditions.

In the case of organic compounds, the electron affinity mainly depends on the presence of electrophores in the molecular structure as halogens, nitro groups, organometals, or diketons.

For halogens, the ECD response decreases in the following order:

$$I > Br > Cl > F$$

The response factor, and therefore selectivity, can vary between 1 and 10^6 as a function of the degree of the electron affinity of molecules, as shown in Table 18-2. These values are also affected by temperature which enhances the detector response for those compounds capturing electrons dissociatively.

Considering the differences in response, you must calibrate the detector before performing quantitative determinations. To calibrate the detector, inject standard mixtures under the same operating conditions used for the samples to be tested. The detector sensitivity is also affected by carrier and make-up gas flow rates, since the detector response is related to the solute concentration of the gaseous mixture.

Table 18-2. Relative Response to Some Organic Compounds

Substance	Relative Sensitivity
Ethane Benzene	1
Butanol Acetone Chlorobutane Chlorobenzene	$1–10^2$
1,2 Dichloroethane Anthracene Keto-steroids Tetraethyl lead Benzyl chloride	$10^2–10^4$
Chloroform Nitrobenzene Carbon disulphide Cinnamaldehyde	$10^4–10^5$
Carbon tetrachloride Dinitrophenol Diethyl fumarate Dinotrobenzene Hexachlorobenzene Hexachlorocyclohexane	$10^5–10^6$

Constant Current Operating Mode

In the constant current, pulse-modulated mode, the detector is controlled by a PCB. During pulse application, electrons migrate to the anode, and therefore, their concentration in the cell rapidly drops to zero.

During the interval between pulses, electrons gradually return to their original concentration and to thermal equilibrium in which the capturing process is favorable.

In the relatively long interval between two short pulses, all electrons not consumed by capture are collected at the anode that measures the electron flow (cell current) present at that moment.

In Equation (18-4), the average cell current I is proportional to the concentration of electrons $[e^-]$ collected at each pulse, and to the frequency of the applied pulses:

$$I = K[e^-]f \tag{18-4}$$

The cell current is forced to be constant, at a preset reference value, through an electric feed-back loop circuit that compares the cell current to the reference current at any time.

When an electron capturing compound enters the detector cell, the electron concentration $[e^-]$ decreases and, according to Equation (17-4), the pulse frequency, required to collect the remaining free electrons, rises to maintain a constant cell current.

The difference in the frequency, when an electron capturing compound enters the cell, and the base frequency, when no sample is present, is converted into an electric signal which is proportional to the concentration of the compound in the detector.

ECD Installation

This operation allows the correct installation of the ECD on your TRACE GC. Refer to Figure 18-2.

Material required

- ECD Fixing Tool

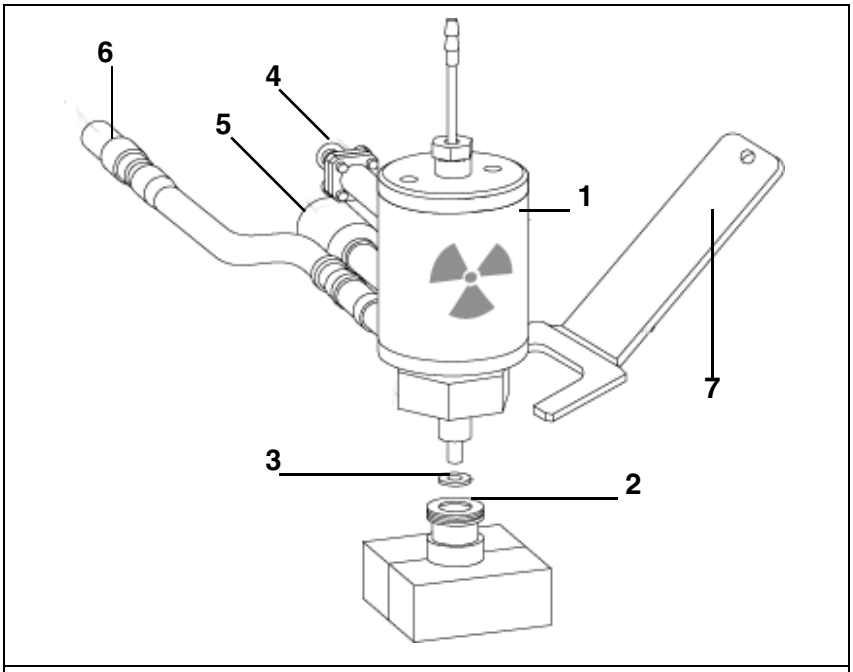

1. ECD	2. Detector Base Body
3. Lower Seal	4. Signal connector
5. Excitation Connector	6. Temperature sensor/heater Connector
7. ECD Fixing Tool	

Figure 18-2. Installation of the ECD

1. Install the ECD on the detector base body interposing the lower seal. Secure the detector by using the ECD fixing tool

2. Carefully, connect the signal, excitation and temperature sensor/heater extension cables coming from the detector control card, to the detector cell.

ECD Menu

The **DETECTOR (ECD)** menu contains the detector control parameters if the GC has been configured for an ECD. Press **LEFT DETECTOR** or **RIGHT DETECTOR** to open the menu shown in Table 18-3.

Table 18-3. Detector (ECD) Menu

Menu	Range	Comments
RIGHT DET (ECD)		This line is the menu title bar.
Base temp	On/Off, 0–400 °C	This indicates the detector base body temperature. Press **ON** to turn on the heater and display the actual and setpoint values. Press **OFF** to turn off the heater and display the actual value.
ECD temp	On/Off, 0–400 °C	This indicates the detector temperature. Press **ON** to turn on the heater and display the actual and setpoint values. Press **OFF** to turn off the heater and display the actual value.
Ref current nA	0.0–3.0 nA in steps of 0.1 nA	This indicates the cell reference current expressed in nanoamperes.
Freq kHz	0–999.99 kHz	This indicates the actual value of the pulse frequency rate. Refer to *Base Frequency* on page 342 for more information.
Pulse amp V	5–50 V in a continuous mode	This indicates the pulse amplitude expressed in volts.
Pulse width us	0.1, 0.5, or 1.0 µs	This indicates the pulse width expressed in microseconds. Press **ENTER** to open the submenu. An asterisk appears beside the pulse width selected.

Table 18-3. Detector (ECD) Menu (Continued)

Menu	Range	Comments
`Mkup`[1] `(XX)`	On/Off, 0–100 mL/min	This indicates the make-up gas used with the ECD. The type of the gas is displayed in parentheses. Press **ON** to turn on the flow and display the actual and setpoint values. Press **OFF** the turn off the flow and display the actual value. If you have a non-DGFC module, the actual values are not displayed, and you can only turn the flows on and of

1. If you have a non-DGFC module, the make-up gas must be measured and adjusted manually from a pressure regulator located in the pneumatics. The range is On/Off.

Base Frequency

Base frequency is an important parameter in evaluating the operating status of the ECD system.

For a constant concentration of thermal electrons inside the detector cell, the base frequency is a function of the reference current, pulse amplitude, and pulse width selected. The frequency increases when the reference current is increased or when the pulse duration or pulse amplitude is reduced.

For a given reference current, pulse duration, and amplitude, the base frequency remains constant when only carrier gas and make-up gas flow through the cell. The frequency generally increases, under the same operating conditions, because of decreased electron population inside the cell or reduced electron collecting efficiency. In the latter case, the collecting efficiency can be restored by cleaning or replacing the collecting electrode (anode).

If the electron concentration has decreased due to contaminants entering the detector cell, you must remove the source of contamination.With a high base frequency, the probability of electron capture tends to decrease, and therefore, the signal to noise ratio generally decreases.
You must select the appropriate reference current values to maintain the base frequency at acceptable levels in the **`DETECTOR (ECD)`** menu.

OPERATING SEQUENCE

Programming an ECD with DGFC

Before you begin this sequence, do the following:

- Verify that all detector gases are connected, a column is correctly installed, and the system is free of leaks.
- Check the oven temperature and injector temperature.
- Check the carrier gas flow according to the capillary or packed column in use.

WARNING! Hydrogen is a potentially dangerous gas. Refer to *Using Hydrogen* on page xl for safety information.

1. Press **LEFT DETECTOR** or **RIGHT DETECTOR** to open the `DETECTOR (ECD)` menu.
2. Set the detector base body temperature.
3. Set the detector temperature. Keep in mind the maximum column temperature required for the analysis and the type of compounds to be detected. The ECD detector temperature is generally set between 250 °C and 350 °C.
4. Change the make-up gas flow rate, if desired.

NOTE During the heating stage, the make-up gas flow rate should be increased up to 50% over the normal operating flow rate.

5. Set the reference current to 1.0 nA.
6. Set a pulse amplitude of 50 V. If the GC system is ideally clean, a lower value can be selected to reduce the excitation level of electrons.
7. Scroll to `Pulse width` and press **ENTER** to open the submenu.
8. Select the desired pulse width depending on the gas in use and press **ENTER**.

   When nitrogen is used, a pulse width of 1.0 µs or 0.5 µs must be selected. 0.1 µs is recommended when using argon/methane.

9. Read the frequency value displayed. After you set a reference current of 1.0 nA, a pulse width of 1.0 µs, and a pulse amplitude of 50 V, a base frequency lower than 5 kHz should be displayed.

   Should the resulting frequency value be very low (1–2 kHz), the pulse voltage can be reduced to 15–30V and/or the pulse width can be set to 0.5 µs to increase the linear range and improve the signal to noise ratio.

10. Press **LEFT SIGNAL** or **RIGHT SIGNAL** to open the **`SIGNAL (ECD)`** menu. Verify the output signal.

Refer to the *Setting the ECD Signal Parameters* operating sequence on page 346 for instructions on setting the signal parameters.

OPERATING SEQUENCE

Programming an ECD with Non-DGFC

Materials needed:

- screwdriver
- bubble flow meter or electronic flow meter

Before you begin this sequence, do the following:

- Verify that all detector gases are connected, a column is correctly installed, and the system is free of leaks.
- Check the oven temperature and injector temperature.
- Check the carrier gas flow according to the capillary or packed column in use.

WARNING! Hydrogen is a potentially dangerous gas. Refer to *Using Hydrogen* on page xl for safety information.

1. Press **LEFT DETECTOR** or **RIGHT DETECTOR** to open the **`DETECTOR (ECD)`** menu.

2. Set the detector base body temperature.

3. Set the detector temperature. Keep in mind the maximum column temperature required for the analysis and the type of compounds to be detected. The ECD detector temperature is generally set between 250 °C and 350 °C.

4. Turn the make-up gas `On`.

5. Using the flow meter, measure the flow at the exit of the detector.

6. Use the pressure regulators to adjust the flow until it reaches the desired flow rate.

NOTE During the heating stage, the make-up gas flow rate should be increased considerably (up to 50% over the normal operating flow rate).

7. Set the reference current to 1.0 nA.

8. Scroll to `Pulse width` and press **ENTER** to open the menu selection.

9. Select the desired pulse width according to the gas used and press **ENTER**.

   When nitrogen is used, a pulse width of 1.0 µs or 0.5 µs must be selected. When using argon/5% methane, a pulse width of 0.1 µs is recommended.

10. Set the pulse amplitude to 50 V.

11. Read the frequency value displayed. After you set a reference current of 1.0 nA, a pulse width of 1.0 µs, and a pulse amplitude of 50 V, a base frequency lower than 5 kHz should be displayed.

    Should the resulting frequency value be very low (1–2 kHz), the pulse voltage can be reduced to 15–30V and/or the pulse width can be set to 0.5 µs to increase the linear range and improve the signal to noise ratio.

12. Press **LEFT SIGNAL** or **RIGHT SIGNAL** to open the **`SIGNAL (ECD)`** menu. Verify the output signal.

Refer to the *Setting the ECD Signal Parameters* operating sequence on page 346 for instructions on setting the signal parameters.

OPERATING SEQUENCE

Setting the ECD Signal Parameters

1. Press **LEFT SIGNAL** or **RIGHT SIGNAL** to enter the detector **`SIGNAL (ECD)`** menu.
2. Scroll to `Auto zero?` and press **ON**.
3. If offset is required, scroll to `Offset` and enter a numeric value or press **ON** to recall the last offset from memory.
4. Turn `Baseline comp` **ON** if you want to compensate the baseline.

19

Nitrogen Phosphorus Detector (NPD)

This chapter describes the principles and sequences for the Nitrogen Phosphorus Detector (NPD).

Chapter at a Glance...

Operating Procedures

NPD Overview

The NPD provides selective detection of nitrogen or phosphorous-containing organic compounds. A ceramic matrix thermionic source, positioned above the jet, is electrically heated in a dilute hydrogen/air environment to create a hot chemically reactive gas layer around the source.

When compounds containing nitrogen or phosphorus atoms impact this hot source, electronegative decomposition products are formed and ionized by

extraction of electrons from the thermionic source. The negative ions are then collected and detected through the electrometric amplifier.

A thermionic source with a different surface coating is also available. This source provides high specificity and sensitivity to certain electronegative molecules when operating in an inert nitrogen gas environment. This is the Enhanced Nitrogen Selectivity (ENS) operating mode.

The jet, mounted on the detector base body, is suitable for operating temperature up to 450 °C. Figure 19-1 shows the NPD.

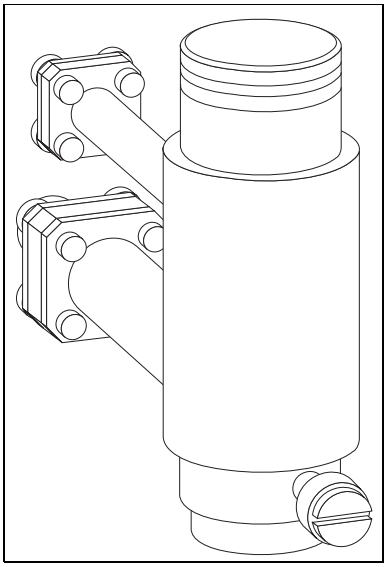

Figure 19-1. Nitrogen Phosphorus Detector

Thermionic Source Lifetime

Source lifetime can vary depending on the individual source, the operating temperature, and the analytical conditions. The source heating current needs to be just high enough to produce an active layer around the source itself.
When a readjustment of the source heating current is necessary, the magnitude of the detector standing current or the response to a standard sample can serve as a guide to the correct adjustment.

To prolong the source lifetime, we recommend you turn off the heating current and the hydrogen flow when the detector is not being used for a prolonged period of time (for example, overnight or on weekends) or when the carrier gas flow is interrupted.

Bleed from silicone-based stationary phases or residual silanizing reagents (from derivatization procedures) may contaminate the source surface with silicone dioxide and reduce the operative lifetime. Also, the extended use of halogenated solvents can adversely affect the source lifetime by the formation of reaction by-products on the source coating.

NPD Gas Supplies

The gases normally used with the NPD are shown in Table 19-1.

Table 19-1. NPD Carrier Gases

Carrier Gas	Capillary Columns	Packed Column
Helium	X	X
Nitrogen	X	X
Hydrogen	X (only with DGFC)	

WARNING! Hydrogen is a potentially dangerous gas. Refer to *Using Hydrogen* on page xl for safety information.

The carrier gas flow range depends on the type of the gas used and on the type and diameter of the capillary or packed column installed.

The fuel and make-up gases for the NPD are:

- fuel gas: hydrogen, air
- make-up gas: nitrogen, helium

Nitrogen is preferred over helium because it has a much lower thermal conductivity and it requires a lower heating current for the source.

NOTE A make-up gas is not necessary when a packed column is used.

The detector gas flow rates generally used are:

- hydrogen: 2–4 mL/min
- air: 40–80 mL/min
- make-up: 10–20 mL/min

NPD Installation

This operation allows the correct installation of the NPD on your TRACE GC.

Material required

- Jet for NPD
- Tool for jet

1. Place the jet into the detector base body housing and tighten it with the proper tool. Ensure the jet is perfectly vertically aligned to avoid damaging its ceramic part. Refer to Figure 19-2.
2. Install the NPD on the detector base body and secure it by using the fixing screw on the front of the detector cell. Refer to Figure 19-3.
3. Carefully, connect the signal and ignition polarization cables coming from the detector control card, to the detector cell. Refer to Figure 19-3.

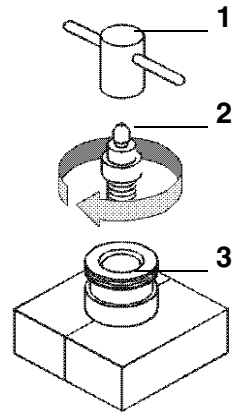

1. Tool for jet
2. Jet
3. Detector base body

Figure 19-2. Jet for NPD

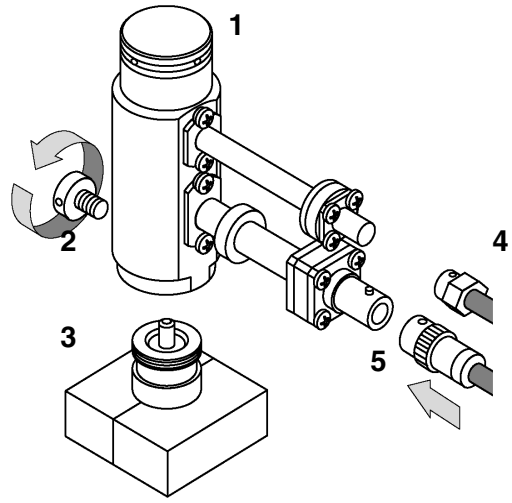

1. NPD
2. Fixing screw
3. Detector base body
4. Signal cable
5. Ignition polarization cable

Figure 19-3. Installation of the NPD

NPD Menu

The **DETECTOR (NPD)** menu contains the NPD control parameters.
Press **LEFT DETECT** or **RIGHT DETECT** to open the **DETECTOR (NPD)** menu.
The parameters are explained in Table 19-2.

Table 19-2. Detector (NPD) Menu

Menu	Range	Comments
RIGHT DET (NPD)		This line is the menu title bar.
Source cur, A	On/Off, 1.000–3.500 A in steps of 0.01 A	This is the current applied to heat the thermionic source. It is expressed in amperes. Press **ON** to turn on the current and to display the setpoint value. Press **OFF** to turn off the current.
Base temp	On/Off, 0–450 °C	This is the detector base body temperature. Press **ON** to turn on the heater and to display the actual and setpoint values. Press **OFF** to turn off the heater and to display the actual value.
Signal pA	Not editable	This parameter shows the collector current in picoamperes (standing current level).
Target curr. pA	0.0-99.9 pA (for input range of 0) 0.0-999 pA (for input range of 1-3)	This is the target level to be used as a reference value.
Auto adjust	Yes, No	This line indicates the automatic adjustment of the Signal pA to reach the given Target curr pA. Press **YES** to enable auto adjust.
Polarizer V	1.0–99.0 in steps of 0.1 V	This line indicates the source polarizing voltage in volts.

Table 19-2. Detector (NPD) Menu (Continued)

Menu	Range	Comments
`H2 delay time`	On/Off, 0.00–999.9 min	This parameter may be set to interrupt the hydrogen flow during the solvent elution to protect the source. After this time, the hydrogen flow is automatically restored. Press **ON** to turn on the delay and to display the actual and setpoint values.
`H2`	On/Off, 0–10.0 mL/min in steps of 0.1 mL/min	This line indicates the hydrogen flow supplied to the detector. Press **ON** to turn on the gas flow and to display the actual and setpoint values. Press **OFF** to turn off the flow and to display the actual value. If you have a non-DGFC module, the actual values are not displayed and you can select only `On` or `Off`.
`Air`	On/Off, 0–600 mL/min	This indicates the air flow supplied to the detector. Press **ON** to turn on the gas flow and to display the actual and setpoint values. Press **OFF** to turn off the flow and to display the actual value. If you have a non-DGFC module, the actual values are not displayed and you can select only `On` or `Off`.
`Mkup (N2)`[1]	On/Off, 0–100 mL/min	This indicates the make-up gas used with the NPD. The type of the gas is displayed in parentheses. Press **ON** to turn on the gas flow and to display the actual and setpoint values. Press **OFF** or **0** to turn off the flow and to display the actual value. The flow remains on when the NPD is off. If you have a non-DGFC module, the actual values are not displayed and you can select only `On` or `Off`.

1. If you have non-DGFC module, the detector gases (H_2, air, and make-up) must be measured and adjusted manually from a pressure regulator located in the pneumatics. The range is On/Off.

OPERATING SEQUENCE

Programming an NPD with DGFC

Before you begin this sequence, do the following:

- Verify that all detector gases are connected, a column is correctly installed, and the system is free of leaks.
- Check the oven temperature and injector temperature.
- Check the carrier gas flow according to the capillary or packed column in use.

WARNING! Hydrogen is a potentially dangerous gas. Refer to *Using Hydrogen* on page xl for safety information.

1. Press **LEFT DETECTOR** or **RIGHT DETECTOR** to open the **`DET (NPD)`** menu.
2. Set the detector `Base temp`.
3. Scroll to `H2` and set the hydrogen flow rate.
4. Scroll to `Air` and set the air flow rate.
5. Scroll to `Mkup` and set the make-up flow.
6. Scroll to `Polarizer V` and set 3.5 V.
7. Scroll to `Source cur,` and set the heating current value. Wait for a few seconds and verify the ignition of the gas layer around the thermionic source.

   The baseline level `Signal pA` will suddenly increase indicating the gas around the source is activated. The level will be stable at 10–30 pA.

   - If the baseline level `Signal pA` will not go up, increase the `Source curr.` value up to the ignition of the thermionic source.
   - If the signal level shown is higher than 100 pA, the heating current can be reduced and/or the air flow increased.

8. After the source ignition, a certain conditioning time is required to reach the correct thermal equilibrium before starting analytical operations. Two hours is usually sufficient to get a good baseline stability.

9. At this point, you can scroll to `Target curr pA` and set a reference value according to the `Signal pA` value. Use Auto adjust to reach the target current in order to compensate the natural loss in surface ionization activity of the source.

NOTE After the initial time the `Source curr.` could be increased to compensate for an excessive baseline drift or to ignite the active layer around the source after sample's solvent *quenching effect*.

10. Press **LEFT SIGNAL** or **RIGHT SIGNAL** to open the detector **`SIGNAL (NPD)`** menu and verify the output signal.

Refer to the *Setting the NPD Signal Parameters* operating sequence on page 358 for instructions.

OPERATING SEQUENCE

Programming an NPD with Non-DGFC

Before you begin this sequence, do the following:

- Verify that all detector gases are connected, a column is correctly installed, and the system is free of leaks.
- Check the oven temperature and injector temperature.
- Check the carrier gas flow according to the capillary or packed column in use.

WARNING! Hydrogen is a potentially dangerous gas. Refer to *Using Hydrogen* on page xl for safety information.

Adjust the Gas Flows

1. Press **LEFT DETECT** or **RIGHT DETECT** to open the **`DET (NPD)`** menu.
2. Set the detector `Base temp`.
3. Turn the `Air` and `Make up` gas flows `Off`.
4. Turn the `Hydrogen` flow `On`.
5. Connect the flow meter to the detector base body using the adapter.
6. Measure the gas flow.
7. Adjust the gas pressure with the pressure regulator until the desired gas flow is achieved.
8. Turn the `Hydrogen` flow `Off`.

WARNING! Never measure air and hydrogen flow together.

9. Turn the `Air` supply `On`.
10. Measure the gas flow.

11. Adjust the gas pressure with the pressure regulator until the desired gas flow is achieved.

12. Turn the `Air` flow `Off`.

13. Turn the `Makeup` gas flow `On`.

14. Measure the gas flow.

15. Adjust the gas pressure with the pressure regulator until the desired gas flow is achieved.

Program the Heating and Signal Values

1. Scroll to `Polarizer V` and enter the polarizer value.

2. Scroll to `Source cur,` and set the heating current value. Wait for a few seconds and verify the ignition of the gas layer around the thermionic source.

   The baseline level `Signal pA` will suddenly increase indicating the gas around the source is activated. The level will be stable at 10-30 pA.

   - If the baseline level `Signal pA` will not go up, increase the `Source curr.` value up to the ignition of the thermionic source.

   - If the signal level shown is higher than 100 pA, the heating current can be reduced and/or air flow increased.

3. After the source ignition, a conditioning time is necessary to reach the correct thermal equilibrium before starting analytical operations. Two hours is normally sufficient to get a good baseline stability.

4. At this point, you can scroll to `Target curr pA` and set a reference value according to the `Signal pA` value. Use Auto adjust to reach the target

current in order to compensate the natural loss in surface ionization activity of the source.

NOTE After the initial time the `Source curr.` could be increased to compensate for an excessive baseline drift or to ignite the active layer around the source after sample's solvent *queching effect*.

5. Press **LEFT SIGNAL** or **RIGHT SIGNAL** to open the detector **`SIGNAL (NPD)`** menu and verify the output signal.

Refer to the *Setting the NPD Signal Parameters* operating sequence for instructions.

OPERATING SEQUENCE

Setting the NPD Signal Parameters

1. Press **LEFT SIGNAL** or **RIGHT SIGNAL** to enter the detector **`SIGNAL (NPD)`** menu.
2. Scroll to `Range 10^ (0...3)` and select the electrometer amplifier input range. `0` (10^0) is the most sensitive.
3. If output signal filtering is required, scroll to `Analog filter` and press **ON**.
4. Scroll to `Auto zero?` and press **ON**.
5. If offset is required, scroll to `Offset` and enter a numeric value or press **ON** to recall the last offset from memory.
6. Turn `Baseline comp` **ON** if you want to compensate the baseline.

NOTE If the `Range 10^` is set 2 or 3, the small variation of the output signal is not detected. For this reason the `Signal pA` parameter will be not displayed in the **`DETECTOR NPD`** menu.

20

Photoionization Detector (PID)

This chapter describes the operating sequences and principles for the Photoionization Detector (PID).

Chapter at a Glance...

Operating Sequences

PID Overview

The PID detection unit, shown in Figure 20-1, consists of a hot cell assembly surrounded by a stainless steel bell. The bell guides the gas that thermally insulates the cell from the lamp housing. It also purges the external side of the cell to prevent air from diffusing into the cell.

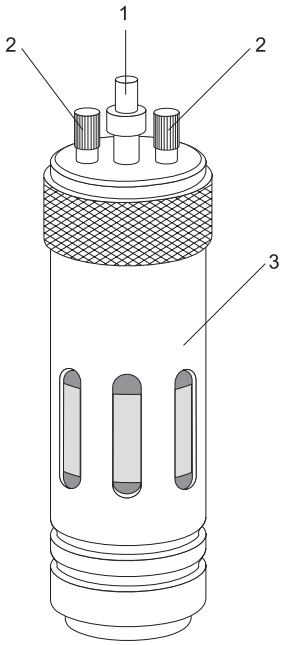

1. UV Lamp Holder
2. Knurled Screws
3. Detector Heat Sink

Figure 20-1. The Photoionization Detector

All the gases (carrier, make-up, and sheath gas) leave the detector through the exit tube as shown in Figure 20-2.

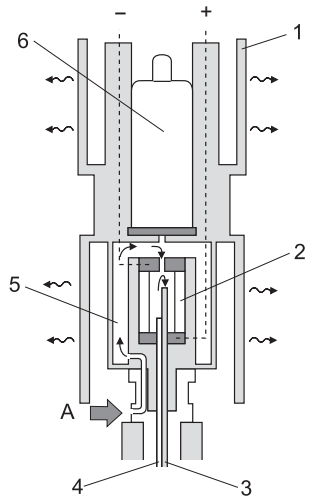

1. Heat Sink	5. Gas Insulation
2. Quartz Cell	6. UV Lamp
3. Exit Line	A. Sheath Gas
4. Column	

Figure 20-2. PID (Cutaway View)

The lamp housing, located above the bell, contains all the electrical contacts and acts as a support for the lamp holder. The UV lamp inside the lamp holder is easily removable for replacement operations.

The lamp housing and UV lamp are kept at a low temperature (<100 ºC) by a heat sink which dissipates the heat of the detector base body by convection.

The detector cell consists of an all-quartz ionization chamber containing two electrodes (polarizing and collecting), to which a voltage of 300 V is applied.

The ionization chamber is the hot part of the detector. The UV lamp, the sealed window, and the lamp housing are kept relatively cold by the heat sink and sheath gas.

Operating Principles

The PID operates on the principle of absorption of energy (photons) emitted by an UV lamp by sample molecules. This leads to an ionization process described in the following equation:

$$AB + h\nu \Rightarrow AB^{+} + e^{-}$$

This process occurs when the molecules have ionization potential less than or roughly equal to the energy of the UV lamp used. The use of different lamps makes it possible to achieve different detection selectivity. As a general rule, the lamp emitting the lowest energy photons provides the highest selectivity.

Appendix A, *Ionization Potential of Selected Molecules*, contains information to help you determine the lamp intensity necessary to ionize several different types of molecules.

PID Applications

The PID is mainly used to determine aromatic pollutant compounds in environmental applications and to analyze polycyclic aromatic hydrocarbons. In addition, this detector may also be used to determine alkenes and some inorganic substances such as arsine, phosphine, and ammonia. The PID performance is better than that of the TCD in terms of sensitivity and selectivity for these substances.

To prevent memory effects and contamination with the sample, operate the PID at temperatures higher than 300 ºC. It can be baked-out at temperatures of up to 400 ºC. Due to its innovative thermal design, the lamp lifetime is not reduced at such high temperatures.

UV Lamp Types

Four easily interchangeable UV lamps are available for analyzing different compounds. Table 20-1 shows the different lamps and their applications. Refer to Appendix A, *Ionization Potential of Selected Molecules*, to determine the lamp intensity necessary for your application.

Table 20-1. PID UV Lamps

Lamp Type	Application
8.4 eV	This lamp is used for the determination of amines and polycyclic aromatic compounds. It provides the highest selectivity.
9.6 eV	This lamp is used for specific determination of low boiling aromatic compounds (BTEX analyses).
10.6 = 10.0 (10.2) eV	This lamp is used for general applications.
11.8 eV	This lamp is used for the determination of aldehydes and ketones.

NOTE All the UV lamps currently on the market that have 10.0 or 10.6 labels are identical. They contain krypton gas which emits both 10.0 and 10.6 eV radiations. The krypton-filled lamp also qualifies as a 10.2 eV lamp.

PID Gas Supplies

The PID requires three gas flows:

- carrier gas
- make-up gas
- sheath (purge) gas

The following gases can be used for the PID carrier gas supply:

- helium (preferred)
- nitrogen
- hydrogen (for capillary columns)

The carrier gas flow range depends on the type of the gas used and on the type and diameter of the capillary column installed.

The following gases can be used for the PID make-up gas supply:

- helium (preferred)
- nitrogen

NOTE The make-up gas you use also depends on the type of detector used in series with the PID, if any. Refer to *Detectors Coupled in Series to the PID* on page 365 for more information.

The following gases can be used for the PID sheath gas:

- helium (for detector temperature up to 300 ºC)
- nitrogen (for detector temperature over 300 ºC)

Flow Rates

The following gas flow rates are recommended for the PID:

- make-up gas: 5–10 mL/min
- sheath gas: 30–40 mL/min

To obtain the maximum sensitivity and resolution, the total flow rate of carrier and make-up gas together should be 8–10 mL/min.

Non-DGFC Gas Control

If you have a non-DGFC module, the detector make-up and sheath gases must be measured and adjusted manually from a pressure regulator located in the pneumatics. The range for `Mkup` and `Sheath gas` in the **`DET (PID)`** menu is limited to `On` or `Off`. Refer to *PID Menu* on page 373 for more information about the gas control parameters.

Detectors Coupled in Series to the PID

You can couple another detector in series to the PID by connecting the outlet of the exit line to the second detector base body, as shown in Figure 20-3.

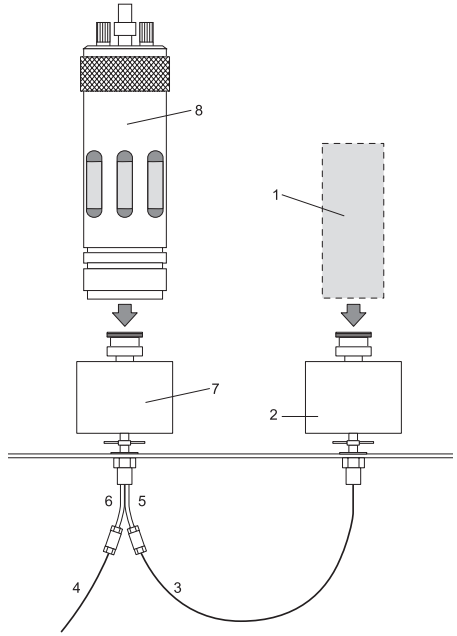

1. Auxiliary Detector	5. Exit Line
2. 2nd Detector Base Body	6. Inlet Line
3. Fused Silica Tubing	7. Detector Base Body
4. Column	8. PID

Figure 20-3. PID/Second Detector Coupling

The make-up and purge gas flow through the exit line. The addition of other gases is not usually necessary.

The sheath gas should be nitrogen or helium, depending on the requirements of the detector coupled in series to the PID.

PID/FID Configuration

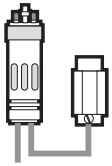

The PID/FID coupling is the most common arrangement. The FID makes troubleshooting easier and more indicative.

Use a selective UV lamp (8.4–9.6 eV) in the PID because the FID provides a universal response.

The required gases are as follows:

- carrier gas—helium, nitrogen, or hydrogen
- make-up gas—helium or nitrogen
- sheath gas—nitrogen or helium

The flow of hydrogen for the FID should be slightly increased to improve flame stability and to prevent the flame from extinguishing due to sample overload. Refer to *FID Gas Supplies* on page 323 for more information.

PID/ECD Configuration

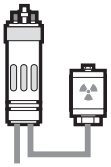

The PID/ECD coupling is helpful for environmental analyses to obtain more analytical information in a single run.

The required gases are as follows:

- carrier gas—helium, nitrogen, or hydrogen
- make-up gas—nitrogen
- sheath gas—nitrogen

The PID sheath gas also provides make-up gas for the ECD. Decrease the ECD make-up gas flow accordingly. Refer to *ECD Gas Supplies* on page 335 for more information

PID/NPD or FPD Configuration

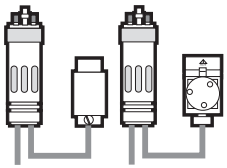

These configurations allow nitrogen/phosphorous and sulphur/phosphorous heterocompounds to be selectively detected in addition to the PID response.

The required gases are as follows:

- carrier gas—helium, nitrogen, or hydrogen (with some limitations)
- make-up gas—helium or nitrogen
- sheath gas—helium or nitrogen

NOTE The make-up and purge gas total flow can affect the NPD response. No relevant influence is produced on the FPD response.

PID Installation

This operation allows the correct installation of the PID on your TRACE GC.

Material required

- UV Lamp
- Fixing Tool

The PID consists of four main sub units. Refer to Figures 20-4 and 20-5 to identify the parts constituting the PID.

- *Cell Block*
  It includes the detector cell assembly, the stainless steel bell and the insulation jacket.
- *Lamp Housing*
  It includes the detector cell assembly, the stainless steel bell and the insulation jacket.
- *Lamp Holder*
  It contains the UV lamp with the electrical cable for lamp ignition and operation.

- *Heat Sink*
  It dissipates the heat of the detector base body.

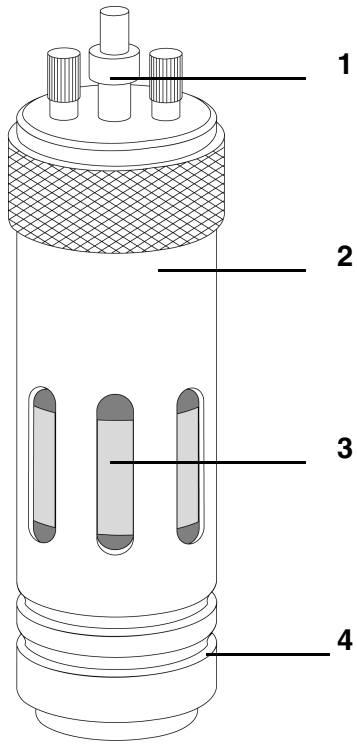

1. Lamp Holder	2. Heat Sink
3. Lamp Housing	4. Cell Block (not visible)

Figure 20-4. PID General View

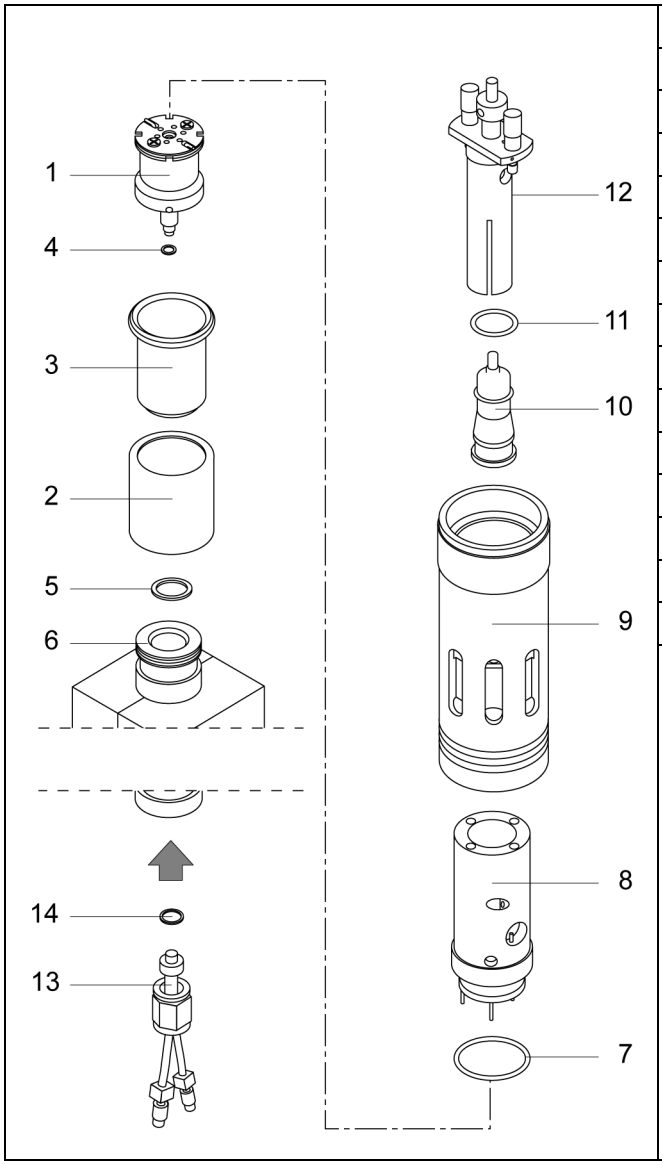

1. Detector Cell Assembly
2. Insulation Jacket
3. Stainless Steel Bell
4. Seal
5. Seal
6. Detector Base Body
7. Viton™ O-ring for Lamp Holder
8. Lamp Housing
9. Heat Sink
10. UV Lamp
11. Viton™ O-ring for UV Lamp
12. Lamp Holder
13. Two-way Capillary Adapter
14. Silver Seal
15. Fixing Tool

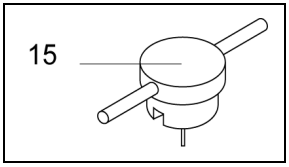

Figure 20-5. Explose of the PID Components

To install the PID on the GC detector base body, follow the instruction below: Refer to Figure 20-5 to identify the parts.

1. Place the insulation jacket (**2**) on the stainless steel bell (**3**).
2. Put the detector cell assembly (**1**) into the stainless steel bell (**3**) passing the lower threaded section of the cell assembly through the bottom hole of the bell.
3. Install the seal (**5**) on the detector base body surface (**6**) and the seal (**4**) on the threaded section of the cell that goes out from the hole of the bell.
4. Screw the cell block (detector cell assembly + stainless steel bell + insulation jacket) on the detector base body, without overtighten, by using the fixing tool (**15**) provided.
5. Make sure that the Viton™ O-ring (**8**) is correctly positioned on the lower part of the lamp housing (**7**).
6. Pull the electrical cables of the lamp housing (**7**) through the heat sink (**9**) pay attention that the external knurled area of the heat sink is oriented upwards and the internal threaded section must be turned towards the detector base body.
7. Put the lamp housing on the cell block paying attention to the proper insertion of the two orientation pins into the corresponding slots of the cell block.
8. Mount the heat sink (**9**) on the lamp housing (**7**), then screw manually the heat sink on the stainless steel bell.
9. Install the UV lamp (**10**), with the Viton ™ O-ring (**11**) on its flange, into the lamp holder (**12**).

WARNING! Never install the UV lamp without the o-ring.

10. Install the lamp assembly (UV lamp + lamp holder) into the lamp housing and ensure screwing the two knurled screws. Refer to the TRACE GC *Maintenance and Troubleshooting Manual*.

11. Mount the two-way capillary adapter (**13**) to the lower part of the detector base body, inside the GC column oven, interposing the seal (**14**).
    The result of the operation is shown in Figure 20-6.

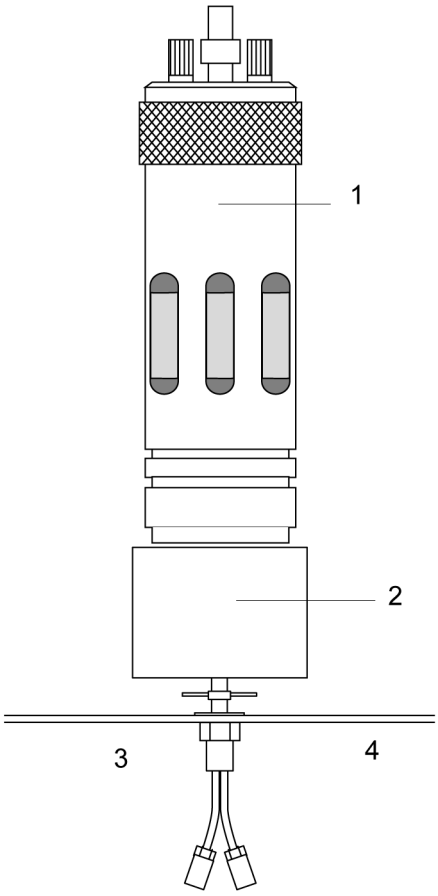

1. PID Assembly	2. Detector Base Body
3. Two-way Capillary Adapter	4. GC Column Oven

Figure 20-6. PID Installation Result

Connecting Capillary Column and Exit Line

WARNING! Before connecting capillary column and exit line, perform the detector leak test as described in the *TRACE GC Maintenance and Troubleshooting Manual*.

12. Connect capillary column and exit line to the PID as described in *Chapter* 15 page 245 of the *TRACE GC Operating Manual*. The result of the operation is shown in Figure 20-7.

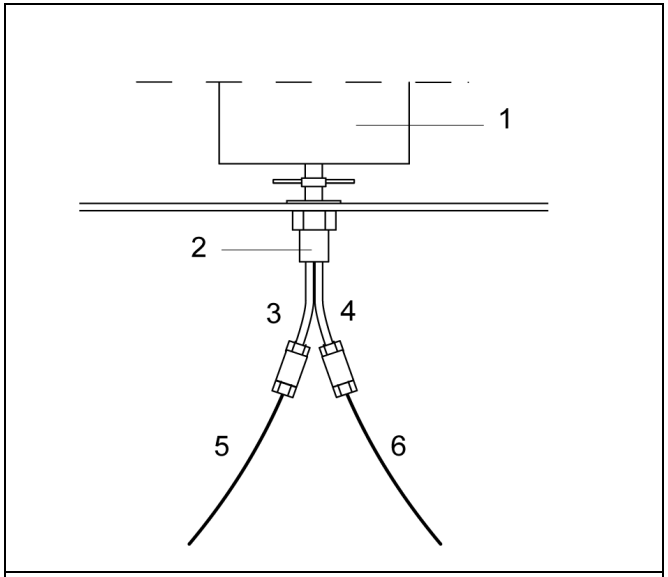

1. Detector Base Body	2. Two-way Capillary Adapter
3. Inlet Line	4. Exit Line
5. Capillary Column	6. Exit Line Fused Silica Tubing

Figure 20-7. Capillary Column and Exit Line Connections

PID Menu

The **DET (PID)** menu contains the PID control parameters. Press **LEFT DETECTOR** or **RIGHT DETECTOR** to open the menu shown in Table 20-2.

Table 20-2. Detector (PID) Menu

Menu	Range	Comments
Right Det (PID)		This is the menu title bar.
Lamp	On/Off	This parameter indicates the UV lamp status. Press **ON** to turn on the lamp. Press **OFF** to turn it off.
Base temp	On/Off, 30–450 ºC	This is the detector base body temperature. Press **ON** to enable the heater and display the actual and setpoint values. Press **OFF** to turn off the heater and display the actual value.
High current mode?	No (1 mA) Yes (2 mA)	This indicates the type of current applied to the UV lamp. Press **YES** to select a high current.
Signal pA	Not editable	This parameter shows the standing current level in picoamperes.
Mkup (N2)	On/Off, 0–100 mL/min.[1]	This parameter indicates the make-up gas used with the PID. The type of gas is displayed in parentheses. Press **ON** to turn on the make-up gas flow and display the actual and setpoint values. Press **OFF** to turn off the flow and display the actual value.
Sheath gas	On/Off, 0–99 mL/min.[1]	This parameter indicates the sheath gas used with the PID. Press **ON** to turn on the sheath gas flow and display the actual and setpoint values. Press **OFF** to turn off the flow and display the actual value.

1. For non-DGFC systems, the actual value is not displayed and the range is On/Off.

OPERATING SEQUENCE

Programming a PID with DGFC

Before you begin, do the following:

- Verify that all detector gases are connected, a column is correctly installed, and the system is free of leaks.
- Verify the electrical connections.
- Check the oven temperature and injector temperature.
- Check the carrier gas flow according to the capillary column in use.

WARNING! Hydrogen is a potentially dangerous gas. Refer to *Using Hydrogen* on page xl for hydrogen safety information when using hydrogen as a carrier gas.

1. Press **LEFT DETECT** or **RIGHT DETECT** to open the `DET (PID)` menu.
2. If the detector requires conditioning, scroll to `Base temp` and set the detector base body temperature to 350 ºC for 2–3 hours. Then set the temperature at the operating value for the analytical requirements.
3. Scroll to `Mkup` and change the make-up gas flow rate, if necessary.
4. Scroll to `Sheath gas` and change the sheath gas flow rate, if necessary.
5. Scroll to `High current mode?` and press **ON** to select a high current, if desired.
6. Scroll to `Lamp` and press **ON**. This starts the UV lamp ignition. A sudden baseline deflection will also indicate that the lamp is lit inside the detector.

   A `Lamp failure` message is displayed if the UV lamp is not lit. Refer to the *Maintenance and Troubleshooting Manual* for more information.
7. Press **LEFT SIGNAL** or **RIGHT SIGNAL** to open the detector `SIGNAL (PID)` menu and verify the output signal.

Refer to the *Setting the PID Signal Parameters* operating sequence on page 377 for more information.

After you enter the correct parameters, the PID requires a short period of conditioning to obtain a stable baseline.

To extend the lamp lifetime, turn off the UV lamp when the detector is not being used for extended periods of time (for example, overnight or on weekends). Refer to the *Shutting Down the PID* operating sequence on page 378 for more information.

NOTE The detector base body temperature, the total gas flow, and the lamp current influence the background level as well as signal and noise. The optimal values can be determined experimentally.

OPERATING SEQUENCE

Programming a PID with Non-DGFC

Before you begin, do the following:

- Verify that all detector gases are connected, a column is correctly installed, and the system is free of leaks.
- Verify the electrical connections.
- Check the oven temperature and injector temperature.
- Check the carrier gas flow according to the capillary column in use.

WARNING! Hydrogen is a potentially dangerous gas. Refer to *Using Hydrogen* on page xl for hydrogen safety information when using hydrogen as a carrier gas.

1. Press **LEFT DETECT** or **RIGHT DETECT** to open the `DET (PID)` menu.
2. If the PID requires conditioning, set the detector base body temperature at 350 ºC for 2–3 hours. Then set the temperature to the operating value for the analytical requirements.
3. Scroll to `Sheath gas` and press **OFF** to turn off the sheath gas flow.

4. Scroll to `Mkup` and press **ON** to turn the make-up gas on.
5. Set the make-up gas supply pressure at the relevant pressure regulator.
6. Measure the make-up flow rate with a flowmeter at the exit of the detector base body.
7. Press **OFF** to turn the make-up gas off.
8. Scroll to `Sheath gas` and press **ON** to turn on the sheath gas flow.
9. Set the sheath gas supply pressure at the relevant pressure regulator.
10. Measure the sheath gas flow rate with a flowmeter at the exit of the detector base body.
11. Scroll to `Mkup` and press **ON** to turn the make-up gas on.
12. Scroll to `High current mode?` and press **ON** to select a high current, if desired.
13. Scroll to `Lamp` and press **ON**. This starts the UV Lamp ignition. A sudden baseline deflection will also indicate that the lamp is lit inside the detector.

    A `Lamp failure` message is displayed if the UV lamp is not lit. Refer to the *Maintenance and Troubleshooting Manual* for more information.
14. Press **LEFT SIGNAL** or **RIGHT SIGNAL** to open the detector **`SIGNAL (PID)`** menu and verify the output signal.

Refer to the *Setting the PID Signal Parameters* operating sequence on page 377 for more information.

After you enter the correct parameters, the PID requires a short period of conditioning to obtain a stable baseline.

To extend the lamp lifetime, turn off the UV lamp when the detector is not being used for extended periods of time (for example, overnight or on weekends). Refer to the *Shutting Down the PID* operating sequence on page 378 for more information.

NOTE The detector base body temperature, the total gas flow, and the lamp current influence the background level as well as signal and noise. The optimal values can be determined experimentally.

OPERATING SEQUENCE

Setting the PID Signal Parameters

1. Press **LEFT SIGNAL** or **RIGHT SIGNAL** to enter the detector **`SIGNAL (PID)`** menu.
2. Scroll to `Range 10^ (0...3)` and select the electrometer amplifier input range. 0 (10^0) is the most sensitive.
3. If output signal filtering is required, scroll to `Analog filter` and press **ON**.
4. Scroll to `Auto zero?` and press **ON**.
5. If offset is required, scroll to `Offset` and enter a numeric value or press **ON** to recall the last offset from memory.
6. Turn `Baseline comp` **ON** if you want to compensate the baseline.

NOTE If the `Range 10^` is set 2 or 3, the small variation of the output signal is not detected. For this reason the `Signal pA` parameter will be not displayed in the **`DETECTOR PID`** menu.

OPERATING SEQUENCE

Shutting Down the PID

Overnight

To shut down the PID overnight, use the following sequence:

1. Press **LEFT DETECTOR** or **RIGHT DETECTOR** to open the **`DET (PID)`** menu.
2. Scroll to `Lamp` and press **OFF** to turn the UV lamp off.
3. Reduce the gas flows, if desired.

The operating temperature should remain unchanged.

Weekends

To shutdown the PID on weekends, use the following sequence:

1. Press **LEFT DETECTOR** or **RIGHT DETECTOR** to open the **`DET (PID)`** menu.
2. Scroll to `Lamp` and press **OFF** to turn the UV lamp off.
3. Reduce the gas flows, if desired.

The operating temperature should be reduced below 300 ºC.

Long Period and/or Cell Maintenance

To shutdown the PID for an extended period of time or for the maintenance of the cell, use the following sequence:

1. Press **LEFT DETECTOR** or **RIGHT DETECTOR** to open the **`DET (PID)`** menu.
2. Scroll to `Lamp` and press **OFF** to turn the UV lamp off.
3. Reduce the temperature of the detector base body to 60–80 ºC.
4. Turn off all gas flows when the temperature is below 100 ºC.

21

Flame Photometric Detector (FPD)

This chapter describes the operating principles and sequences for the Flame Photometric Detector (FPD).

Chapter at a Glance...

Operating Sequences

FPD Overview

The FPD, shown in Figure 21-1, is based on the measurement of the characteristic radiation emitted by particular excited molecular species during their transition to the ground state. Sulphur- and phosphorous-containing compounds introduced in a hydrogen rich flame decompose, giving rise to excited S_2* and HPO* molecular species respectively, where * represents the excited atomic or molecular state. The emission spectrum of S_2* shows a maximum intensity of 394 nm while HPO* has a maximum emission of 526 nm.

These chemiluminescent emissions are isolated by appropriate narrow band optical filters and converted into measurable electrical signals by a photomultiplier tube. The interferential filter is placed between the emission chamber of the FPD and the photomultiplier tube.

There is a quadratic relationship between the number of sulphur atoms introduced in the flame and the S_2* emission. Phosphorous compounds have a linear relationship between the HPO* emission and the phosphorous concentration.

In addition to the traditional detection of sulphur- and phosphorous-containing compounds, the FPD can be used for the selective determination of organotin compounds. In this type of application, a suitable interferential filter (610 nm) must be used. As in the phosphorous mode, the detector response is proportional to the content of heteroelement (tin) in the sample.

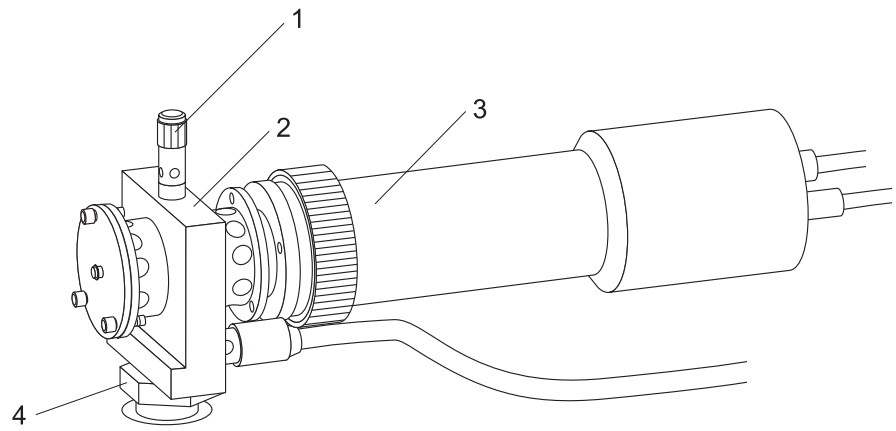

1. Combustion Gas Exit/Light Baffle
2. Detector Body
3. Photomultiplier Tube
4. Fixing Nut

Figure 21-1. Flame Photometric Detector

FPD Description

The FPD detector consists of a combustion chamber, a narrow band interferential filter, and a photomultiplier tube for measuring the chemiluminescent emission. Figure 21-2 shows the body of the detector, including the special burner, the heater and the temperature sensor, the flame ignitor, and the heat shields connected to the photomultiplier tube. The exhaust gases and the combustion products are vented through the combustion gas exit. The detector is equipped with both the sulphur filter (focused at 394 nm) and the phosphorous filter (focused at 526 nm).

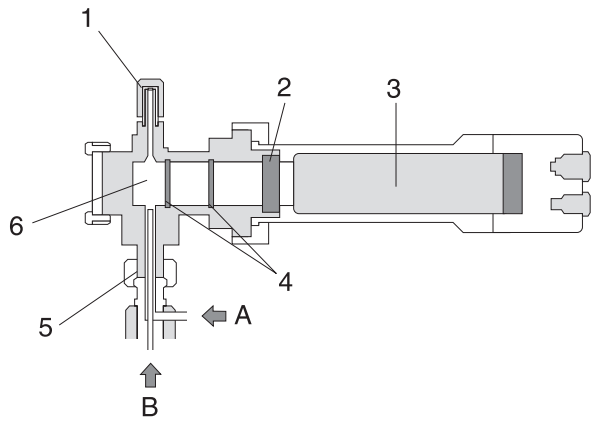

1. Combustion Gas Exit/Light Baffle	5. Fixing Nut
2. Interferential Filter	6. Detector Cell
3. Photomultiplier Tube	A. Air inlet
4. Heat Shields	B. Effluent from the column + hydrogen

Figure 21-2. FPD Cutaway View

Dual FPD

The analytical capability of the Flame Photometric Detector can be expanded by connecting a second photomultiplier tube with different interferential filter on the same detector base body. This configuration allows to process a sample for phosphorous and sulphur profile simultaneously, or phosphorous and tin with suitable interferential filter (610 nm). Figure 21-2 shows the Dual FPD detector.

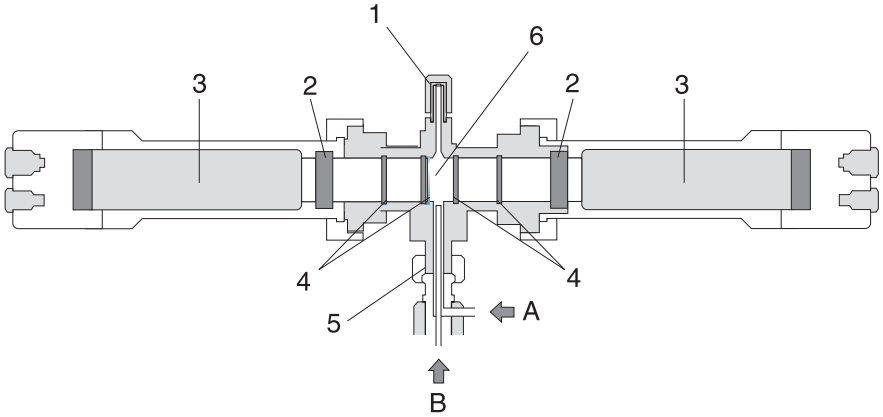

1. Combustion Gas Exit/Light Baffle	5. Fixing Nut
2. Interferential Filter	6. Detector Cell
3. Photomultiplier Tube	A. Air inlet
4. Heat Shields	B. Effluent from the column + hydrogen

Figure 21-3. Dual FPD Cutaway View

To perform Dual FPD detector configuration, the appropriate upgrade kit is required. The second photomultiplier tube must be configured as **auxiliary** detector.

Jet

The metal jet is mounted on the detector base body for capillary and wide-bore (CB 71) or packed columns (CB 70).

FPD Heating

The temperature should be sufficiently high to prevent moisture condensation. Considering that the signal to noise ratio improves by lowering the temperature of the photomultiplier tube, you should keep the FPD at relatively low temperatures (150–180 ºC) and raise the base body temperature to a higher value (280–350 ºC) depending on the analytical requirements. Higher detector temperatures (300 ºC–350 ºC) could be used for ECD/FPD tandem configuration when required.

FPD Gas Supplies

The carrier gases normally used with the FPD are shown in Table 21-1.

Table 21-1. FPD Carrier Gases

Carrier Gas	Capillary Columns	Packed Columns
helium	X	X
nitrogen	X	X
hydrogen	X	---
argon	---	X

The carrier gas flow range depends on the type of gas used and on the type and diameter of the capillary or packed column installed.

The detector fuel gases used with the FPD are:

- hydrogen
- air

Make-up gas is generally not required with the FPD.

The right choice of hydrogen/air flow rates is of primary importance in FPD sensitivity and selectivity. Suggested flow rates are listed in Table 21-2.

Table 21-2. Suggested FPD Gas Flow Rates

Gas	Capillary Column	Packed Column
carrier	1–3 mL/min	30–50 mL/min
hydrogen	85–100 mL/min	100–120 mL/min
air	100–120 mL/min	110–135 mL/min

The optimum air flow rate should be determined experimentally by analyzing a standard mixture after correctly setting the hydrogen flow rate.

NOTE When operating in phosphorous mode, variations in the air/hydrogen ratio can strongly affect the response for certain phosphorous compounds, while phosphorous and sulphur containing molecules are unaffected. This characteristic allows an easy discrimination

between organic phosphates and thiophosphates by simply lowering the air flow (for example, from 120 to 90 mL/min), while maintaining the same hydrogen flow rate. This possibility can be especially useful in the analysis of organophosphorous pesticide residues.

Non-DGFC Gas Control

If you have a non-DGFC module, you must manually measure and adjust the detector gases (H_2, air, and make-up gas) from a pressure regulator located in the pneumatics. The range for detector gases in the **`DET (FPD)`** menu is limited to `On` or `Off`. Refer to *FPD Menu* for more information about the gas control parameters.

FPD Installation

This operation allows the correct installation of the FPD on your TRACE GC.

Material required

- Jet for FPD
- 5-mm wrench
- FPD fixing tool.

1. Place the jet into the detector base body housing and tighten it. Ensure the jet is perfectly vertically aligned to avoid damage.

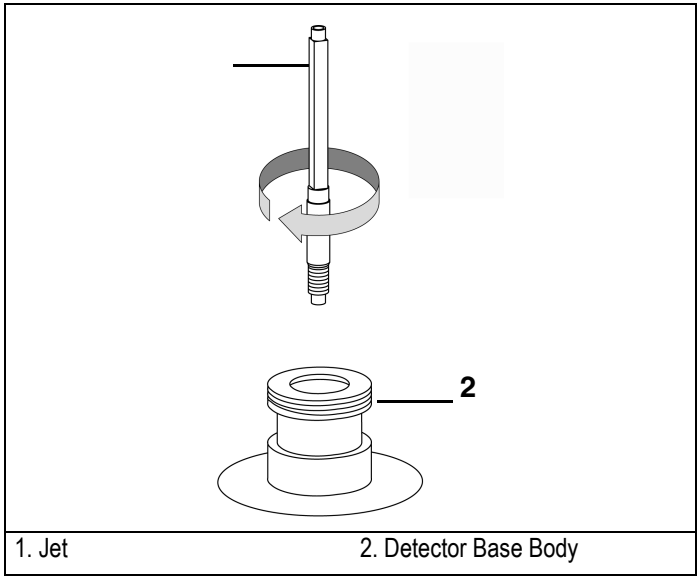

Figure 21-4. Jet for FPD

2. Place the FPD on the detector base body, paying attention that the aluminium ring has been inserted in the correct position.

3. Tighten the fixing nut by using the FPD fixing tool.

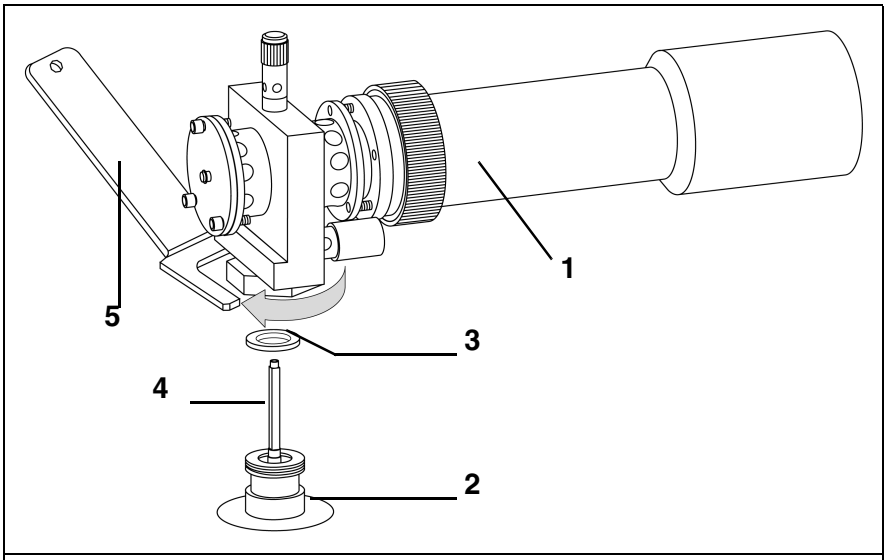

1. FPD	2. Detector Base Body
3. Aluminium ring	4. Jet
5. FPD Fixing Tool	

Figure 21-5. Installation of the FPD

4. Carefully, connect the signal, excitation voltage and ignition/heating cables coming from the detector control card, to the detector cell.

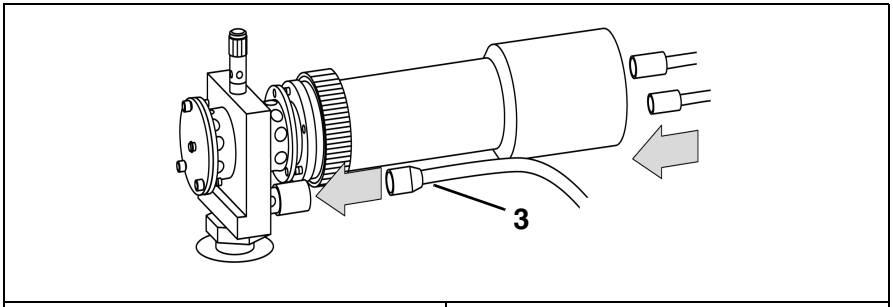

1. Signal Cable	2. Excitation Voltage Cable
3. Ignition/heating Cable	

Figure 21-6. Cables Connection

FPD Menu

The **DET(FPD)** menu contains the FPD control parameters.
Press **LEFT DETECT** or **RIGHT DETECT** to open the menu shown in Table 21-3.

Table 21-3. Detector (FPD) Menu

Menu	Range	Comment
RIGHT DET (FPD)		This line is the menu title bar.
Flame	On/Off	This line indicates the flame status. Press **ON** to turn on the air flow and ignitor and turn on H_2 for ignition. On is displayed if the temperature is ≥ 120 ºC. If not, an error message is displayed.
Base temp	On/Off, 30–450 ºC	This is the detector base body temperature. Press **ON** to turn on the heater and display setpoint and actual values. Press **OFF** to turn off the heater and display the actual value.
FPD temp	On/Off, 30–350 ºC	This is the detector temperature. Press **ON** to turn on the heater and display the actual and setpoint values. Press **OFF** to turn off the heater and display the actual value.
Signal pA	Not editable	This parameter shows the standing current level in picoamperes. The displayed value also indicates the flame status.
High voltage mode	Yes (900 V) No (800 V)	This parameter indicates the value of voltage applied to the photomultiplier tube. Press **ON** to select high voltage.
H2	On/Off, 0–200 mL/min [1]	This line indicates the hydrogen flow to the detector. Press **ON** to turn on the H_2 flow and display the actual and setpoint values. Press **OFF** or **0** to turn off the flow. This flow can be turned on independently when the FPD is off, but it cuts off automatically when the FPD is turned from On to Off.

Table 21-3. Detector (FPD) Menu (Continued)

Menu	Range	Comment
`Air`	On/Off, 0–600 mL/min [1]	This parameter indicates the air flow to the detector. Press **ON** to turn on the air flow and display the actual and setpoint values. Press **OFF** or **0** to turn off the flow. This flow can be turned on independently when the FPD is off, but it cuts off automatically when the FPD is turned from `On` to `Off`.
`Mkup (N2)`	On/Off, 0–100 mL/min [1]	This line indicates the make-up gas flow to the detector. Press **ON** to turn on the flow and display the actual and setpoint values. Press **OFF** or **0** to turn off the flow.

1. For non-DGFC systems, the actual value is not displayed and the range is On/Off.

Dual FPD Menu

When the second photomultiplier tube is connected to the FPD detector and configured as auxiliary detector, the control parameters are contained in the **`AUX DETECTOR`** menu.
Press **AUX** , then scroll to `Detector` and press **ENTER** to open the menu shown in Table 21-3.

Table 21-4. Dual FPD Menu

Menu	Range	Comment
`AUX DETECT (DualFPD)`		This line is the menu title bar.
`Signal pA`	Not editable	This parameter shows the standing current level in picoamperes. The displayed value also indicates the flame status.
`High voltage mode`	Yes (900 V) No (800 V)	This parameter indicates the value of voltage applied to the second photomultiplier tube. Press **ON** to select high voltage.

OPERATING SEQUENCE

Programming an FPD with DGFC

Before you begin, do the following:

- Verify that all detector gases are connected, a column is correctly installed, and the system is free of leaks.
- Check the oven temperature and injector temperature.
- Check the carrier gas flow according to the capillary or packed column in use.

WARNING! Hydrogen is a potentially dangerous gas. Refer to *Using Hydrogen* on page xl for hydrogen safety information when using hydrogen as a carrier gas.

1. Press **LEFT DETECT** or **RIGHT DETECT** to open the `DET (FPD)` menu.
2. Scroll to `Base temp` and set the detector base body temperature according to the analytical requirement.
3. Scroll to `FPD temp` and set the detector temperature. This must be greater than 120 ºC to avoid water condensation on the heat shields.
4. Scroll to `H2` and enter the correct hydrogen flow.
5. Scroll to `Air` and enter the correct air flow rate.
6. Scroll to `Mkup` and enter a make-up gas flow rate, if required, or press **OFF**.
7. Scroll to `High voltage mode?` and press **ON** if high voltage is required.
8. Scroll to `Flame` and press **ON**. This starts the ignition sequence.

Positive variation of the Signal pA value indicates the flame is lit. You can also verify flame ignition by holding a cold, shiny surface (such as a mirror or chrome-plated wrench) to the detector chimney vent and checking for water condensation.
After a short time, the baseline should stabilize to the standing current level of the system.

9. Press **LEFT SIGNAL** or **RIGHT SIGNAL** to open the detector **`SIGNAL (FPD)`** menu and verify the output signal.

Refer to the *Setting the FPD Signal Parameters* operating sequence on page 393 for more information.

Programming the Dual FPD Parameter

1. Press **AUX** , then scroll to `Detector` and press **ENTER** to open the **`AUX DETECT(DualFPD)`** menu.

2. Scroll to `High voltage mode?` and press **ON** if high voltage is required.

Observe the variation of the Signal pA value

1. Press **AUX** , then scroll to `Signal` and press **ENTER** to open the **`AUX SIGNAL (DualFPD)`** menu and verify the output signal.

Refer to the *Setting the FPD Signal Parameters* operating sequence on page 393 for more information.

OPERATING SEQUENCE

Programming an FPD with Non-DGFC

Before you begin:

- Verify that all detector gases are connected, a column is correctly installed, and the system is free of leaks.
- Check the oven temperature and injector temperature.
- Check the carrier gas flow depending on the capillary or packed column in use.

WARNING! Hydrogen is a potentially dangerous gas. Refer to *Using Hydrogen* on page xl for hydrogen safety information when using hydrogen as a carrier gas.

1. Press **LEFT DETECT** or **RIGHT DETECT** to open the **`DET (FPD)`** menu.
2. Scroll to `Base temp` and set the detector base body temperature depending on the analytical requirement.
3. Scroll to `FPD temp` and set the detector temperature. This must be greater than 120 ºC to avoid water condensation on the optical windows.
4. Turn off the air and make-up flows.
5. Turn the hydrogen on to adjust the flow rate.

WARNING! Never measure air and hydrogen flow together.

6. Set the hydrogen supply pressure on the relevant pressure regulator and measure the flow after stabilization. If necessary, repeat this step until the hydrogen flow rate is correct.
7. Turn the hydrogen flow off.
8. Turn on the air flow and adjust and measure the air flow rate.
9. Set the air supply pressure on the relevant pressure regulator and measure the flow after stabilization. If necessary, repeat this step until the air flow rate is correct.
10. Turn the air flow off.
11. If necessary, turn on the make-up gas flow and adjust and measure the flow rate. When the make-up gas is not used, turn it off.
12. Turn the air flow on.
13. Scroll to `High voltage mode?` and press **ON** to select high voltage, if necessary.
14. Scroll to `Flame` and press **ON**. This starts the ignition sequence.
15. Turn the hydrogen flow on.

Positive variation of the Signal pA value indicates the flame is lit. You can also verify flame ignition by holding a cold, shiny surface (such as a mirror or chrome-plated wrench) to the detector chimney vent and checking for water condensation. After a short time, the baseline should stabilize to the standing current level of the system.

16. Press **LEFT SIGNAL** or **RIGHT SIGNAL** to open the detector **`SIGNAL (FPD)`** menu and verify the output signal.

Refer to the *Setting the FPD Signal Parameters* operating sequence on page 393 for more information.

Programming the Dual FPD Parameter

1. Press **AUX ,** then scroll to `Detector` and press **ENTER** to open the **`AUX DETECT(DualFPD)`** menu.

2. Scroll to `High voltage mode?` and press **ON** if high voltage is required.

Observe the variation of the Signal pA value

1. Press **AUX ,** then scroll to `Signal` and press **ENTER** to open the **`AUX SIGNAL (DualFPD)`** menu and verify the output signal.

Refer to the *Setting the FPD Signal Parameters* operating sequence on page 393 for more information.

OPERATING SEQUENCE

Setting the FPD Signal Parameters

1. Press **LEFT SIGNAL** or **RIGHT SIGNAL** to enter the detector **`SIGNAL (FPD)`** menu:
2. Scroll to `Range 10^ (0...2)` and select the electrometer amplifier input range. 0 (10^0) is the most sensitive.
3. Scroll to `Auto zero?` and press **ON**.
4. If offset is required, scroll to `Offset` and enter a numeric value or press **ON** to recall the last offset from memory.
5. Turn `Baseline comp` **ON** if you want to compensate the baseline.

Dual FPD Signal Parameters

1. Press **AUX** , then scroll to `Signal` and press **ENTER** to open the **`AUX SIGNAL (DualFPD)`** menu.
2. Scroll to `Range 10^ (0...2)` and select the electrometer amplifier input range. 0 (10^0) is the most sensitive.
3. Scroll to `Auto zero?` and press **ON**.
4. If offset is required, scroll to `Offset` and enter a numeric value or press **ON** to recall the last offset from memory.
5. Turn `Baseline comp` **ON** if you want to compensate the baseline.

NOTE If the `Range 10^` is set 2, the small variation of the output signal is not detected. For this reason the `Signal pA` parameter will be not displayed in the **`DETECTOR FPD`** menu.

22

Thermal Conductivity Detector (TCD)

This chapter describes the operating principles and sequences for the Thermal Conductivity Detector (TCD).

Chapter at a Glance...

Operating Sequences

TCD Overview

The TCD is sensitive to any compound having thermal conductivity other than that of the carrier gas used. The TCD is a universal type detector. It has a broad range of uses in the analysis of permanent gases and other organic or inorganic compounds for which the Flame Ionization Detector (FID) is practically non-sensitive, such as CO_2, CS_2, H_2O, H_2, and N_2.

While the FID is more sensitive to most organics, the simplicity of the TCD often makes it the preferred detector when analyte concentrations are high enough. The TCD typically requires only one type of gas, such as helium. The FID requires up to four.

Because the TCD is a non-destructive detector, it can be connected in series to other chromatographic detectors.

The TCD consists of a stainless steel block containing two filaments (generally tungsten/rhenium filaments) which have the same electrical resistance. The block is housed in an aluminum case that accommodates the heating elements and the temperature sensor.

The filaments are electrically connected to a Wheatstone bridge. Two gas flows, a reference flow and an analytical flow, enter the TCD cell, pass across the filaments, and vent to the atmosphere. Figure 22-1 shows the filaments and gas flows.

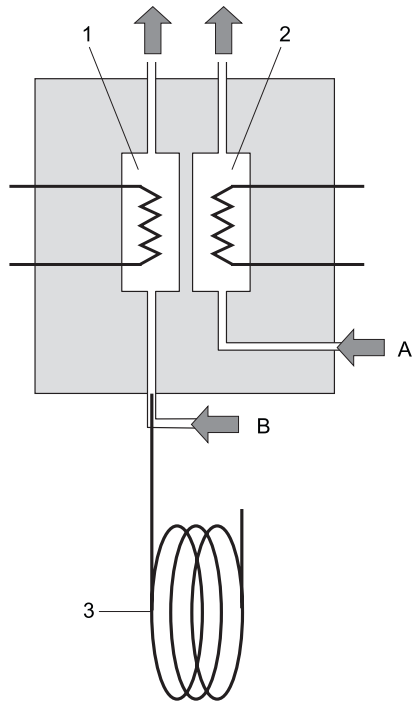

1. Measure Cell	A. Reference Gas
2. Reference Cell	B. Make-up Gas
3. Column	

Figure 22-1. TCD Filaments and Gas Flows

When the filaments are properly powered, they heat at a temperature (resistance) that is a function of the thermal conductivity of the gas flowing through the filaments. When a chromatographic component elutes in the analytical channel, a change takes place in the heat transfer followed by a variation of the filament temperature.

The output signal is sent to a recorder, such as an integrator, strip-chart recorder, or Chrom-Card or ChromQuest data system software. The signal polarity is a function of the thermal conductivity of the component relative to the reference gas and to the user-selected polarity of the filament power supply.

WARNING! The TCD filaments are sensitive to impurities present in the carrier, reference, and make-up gas supplies. To ensure correct detector operation, you should use oxygen and water vapor traps in the carrier gas and the make-up gas supply lines. We suggest that you install an OXICLEAR filter (PN 281 131 40) before connecting the gas to the GC.

TCD Gas Supplies

The TCD detector requires the same gas whether for the measure channel (carrie and make-up gas, when necessary) and the reference channel (reference gas).

Helium is the recommended carrier gas due to its high thermal conductivity and chemical inertness. Low conductivity gases (argon, nitrogen) are used for special analytical requirements.
With special precautions, you can also use hydrogen as the carrier and detector gas.

WARNING! Hydrogen is a potentially dangerous gas. Refer to *Using Hydrogen* on page xl for safety information.

Table 22-1 contains information about the thermal conductivity of several gases.

Table 22-1. Thermal Conductivity of Gases

Gas	Thermal Conductivity ($\lambda x10^7$) at 0 ºC where λ=Cal/cm x sec. x ºC
Hydrogen	4130
Helium	3363
Methane	720
Oxygen	583
Nitrogen	580
Carbon Oxide	540
Argon	406
Carbon Dioxide	343

Columns

The TCD requires two separate gas lines. One connects to the analytical column and the other connects to the reference channel.

The reference channel connects to the DGFC or non-DGFC module. This eliminates the need for a second column. The column effluent connects to the analytical cell along with the make-up gas, if required, from the DGFC or non-DGFC detector module.

Should the use of wide-bore or capillary columns be required, the connection between the column and injector must necessarily be modified. When using capillary columns, the make-up line must be activated. This line has to feed the analytical channel at the column outlet, thus compensating the special flows required by capillary columns. For column installation instructions, refer to Chapter 15, *Columns*.

TCD Operating Modes

The TCD can operate in constant temperature or constant voltage mode. It can also operate in constant current mode, with a set value of 125 mA, under special conditions.

Constant Temperature

In constant temperature mode, the filament temperature remains constant at a set value. A feedback loop circuit changes the voltage as the gas thermal conductivity changes.

Constant Voltage

In constant voltage mode, the filament voltage remains constant at a set value. The temperature variation, positive or negative, is compensated for by a current variation, negative or positive, that generates a corresponding signal. The voltage values range from 5 to 15 V.

Automatic Switching Of Control Options

The automatic switch function is always active. It allows automatic switching from one operating mode to another depending on the parameters set and the carrier gas used.

Automatic Switching From Constant Voltage to Constant Temperature

The following is an example of TCD operating conditions:

- carrier gas: helium (high thermal conductivity)
- cell temperature: 100 ºC
- constant voltage: 10 V
- filament temperature limit: 200 ºC

In constant voltage mode of 10 V with a 200 ºC filament temperature limit, when a compound of a particular thermoconductivity enters the cell, it causes the filament temperature to increase. When the filament temperature reaches the filament temperature limit, the system automatically switches to constant temperature mode and the voltage changes.

Automatic Switching to Constant Current Mode

In special operating conditions, the system may automatically switch to the *constant current* mode. This mode has good sensitivity and a linearity comparable to that obtained with the CV mode. However, the high filament temperatures can potentially shorten the filament life.

NOTE The constant current mode operates only when using high thermal conductivity gases, such as helium.

Selecting TCD Operating Parameters

The TCD can operate in constant temperature (CT) and constant voltage (CV) modes. The mode you choose depends on the concentration range of the sample and the required sensitivity. The CT configuration ensures the maximum linearity of the detector up to concentrations of 1% (g/ml). The CV mode extends the linearity range to higher values, but with a negative impact on sensitivity. After selecting the mode, you must program the following parameters:

- detector temperature
- filament temperature/filament voltage

The detector sensitivity depends on the difference between the temperatures set for the detector and for the filaments: the higher the difference, the better the sensitivity. The general rule for the detector temperature is to set it higher than the maximum temperature reached by the GC column oven during the analysis.

The temperature/voltage applied to the filaments depends on the mode and the carrier gas used.

Selecting an Operating Mode for High Thermal Conductivity Gases

When using hydrogen or helium, the operating mode you select depends on the type and concentration range of the compounds you are analyzing.

Using the Constant Temperature Mode

For samples in concentrations not exceeding 10% (g/µl), use the following values:

- detector temperature: higher than the maximum column oven temperature during the analysis
- filament temperature: 80–100 ºC above the detector temperature

This temperature difference results in a high sensitivity required for trace analysis (ppm). It also ensures a longer filament lifetime. Since the temperature remains constant, this mode considerably increases the filament life compared to other operating modes.

Using the Constant Voltage Mode

For samples in concentrations of a wide percentage range (1–100%; g/µL), use the following values:

- detector temperature: higher than the maximum column oven temperature during the analysis
- filament voltage: 5–7 V

In this operating mode, the detector response is linear up to the maximum concentrations.

Table 22-2 contains the selectable values for the detector temperature and the concentration range when using helium as the carrier gas.

Table 22-2. Selectable TCD Parameters

Concentration Range	Detector Temperature	Filament Temperature	Filament Voltage	Mode
ppm—5%	100 ºC	180 ºC	—	CT
0.5–100%	100 ºC	—	5 V	CV
ppm—5%	180 ºC	270 ºC	—	CT
0.5–100%	180 ºC	—	6 V	CV
ppm—5%	240 ºC	330 ºC	—	CT
0.5–100%	240 ºC	—	6 V	CV

When analyzing samples with a complete range of concentrations (ppm-100%), you can use different operating modes for different applications. The range between 5000 ppm and 5% allows a good linearity of the signal to linearize a series of data and obtain only one reading scale.

Selecting an Operating Mode for Low Thermal Conductivity Gases

When using nitrogen or argon, the operating mode you select depends on the type and concentration range of the compounds you are analyzing.

Using the Constant Temperature Mode

For samples in concentrations not exceeding 1% (g/ml), use the following values:

- detector temperature: higher than the maximum temperature reached by the column oven during the analysis, but not higher than 280–300 ºC
- filament temperature: 120–150 ºC above the detector temperature

Using the Constant Voltage Mode

When using low thermal conductivity gases, the temperatures reached by the filaments are very high for the low voltage supply. Table 22-3 contains the experimental filament temperature values corresponding to the applied voltages when using argon.

Table 22-3. Filament Temperature Values for Argon

Detector Temperature 100 ºC	Values					
Voltage (V)	5	6	7	8	9	10
Filament Temperature (ºC)	235	275	315	355	395	435

For samples with a wide range of concentration percentage (1–100%; g/ml), use the following values:

- detector temperature: higher than the maximum temperature reached by the column oven during the analysis, but not higher than 280–300 ºC
- filament voltage: 5 V

These temperature differences provide good sensitivity without compromising the filament lifetime.

TCD Menu

Table 22-4 shows the TCD control parameters.

Press **LEFT DETECT** or **RIGHT DETECT** to open the **`DETECTOR (TCD)`** menu, depending on the location of your detector.

Table 22-4. The Detector (TCD) Menu

Menu	Range	Comments
`RIGHT DETECTOR (TCD)`		This line is the menu title bar.
`Filament power`	On/Off	Press **ON** to turn on the filament power. Press **OFF** to turn off the filament.
`Fil status`	Ready/ Not Ready	This indicates the filament **Ready** or **Not Ready** status.
`Block temp`	On/Off, 50–450 ºC in 1 ºC increments	This is the detector temperature. Press **ON** to turn on the heater and display the actual and setpoint values. Press **OFF** to turn off the heater.
`Transf temp`	On/Off, 50–450 ºC in 10 ºC increments	This is the transfer line temperature for the heated zone between the oven and the detector cell. Press **ON** to turn on the heater and display the actual and setpoint values. Press **OFF** to turn off the heater. A value higher than or equal to the oven temperature, but lower than the detector temperature must be set.
`Const fil temp?`	Yes/No	Press **YES** to activate the constant filament temperature mode and display the `Fil temp (CT)` parameter. Press **NO** to display the filament voltage and maximum filament temperature parameters. The current operating mode (`CT`, `CV`, or `CC`) is displayed in parentheses.
`Fil temp (CT)`[1]	On/Off, 50–450 ºC in 10 ºC increments	This parameter indicates the filament temperature.

Table 22-4. The Detector (TCD) Menu (Continued)

Menu	Range	Comments
`Fil volts (CV)`[2]	5–15 V in 1 V increments	This parameter indicates the filament voltage.
`Fil temp limit`[2]	50–450 ºC	This parameter indicates the maximum filament temperature.
`Ref flow`	On/Off, 0–100 mL/min[3]	This parameter indicates the reference gas flow. Press **ON** to turn on the flow and display the actual and setpoint values. Press **OFF** or **0** to turn off the flow.
`Mkup flow`	On/Off, 5–100 mL/min[3]	This parameter indicates the make-up gas flow. Press **ON** to turn on the gas flow and display the actual and setpoint values. Press **OFF** to turn off the make-up flow.
`Carrier source`	R, L	When the GC has two injectors, this parameter tells the GC which inlet, left or right, is connected to the TCD. This parameter is used to protect the filaments on DGFC systems when the carrier supply is inadvertently shut off, such as following a septum replacement.

1. This parameter appears only if the `Const fil temp?` parameter is set to `Yes`.
2. This line appears only if `Const fil temp?` is set to `No`.
3. With non-DGFC, the range is limited to On/Off.

If you have a non-DGFC module, the detector gases must be measured and adjusted manually from a pressure regulator located in the pneumatics. The range is limited to `On` or `Off`.

OPERATING SEQUENCE

Programming a TCD with DGFC

Before you begin, do the following:

- Verify that all detector gases are connected, a column is correctly installed, and the system is leak free.
- Check the oven temperature and injector temperature.
- Check the carrier gas flow depending on the packed or capillary column in use.
- When two injectors are configured, scroll to `Carrier source` and specify the `Left` or `Right` channel from which the carrier gas is flowing.
- When a wide-bore or capillary column is used, make sure the make-up gas line is connected.

WARNING! Hydrogen is a potentially dangerous gas. Refer to *Using Hydrogen* on page xl for safety information.

1. Scroll to `Ref flow` and set the appropriate reference gas flow. If this value is `Off`, the filament power is disabled.
2. When make-up gas is required, scroll to `Mkup flow` and set the appropriate make-up gas flow rate.
3. Scroll to `Block temp` to enter the detector temperature.
4. Scroll to `Transfer temp` and set this temperature to a value higher or equal to the column oven temperature.
5. Scroll to `Const fil temp?` to select the operating mode. When constant filament temperature is required, press **YES**. Otherwise, press **NO**.
   - If `Y` has been entered, scroll to `Fil temp` and set the filament temperature. This value must always be higher than the detector temperature. The greater the difference between the two temperatures (ΔT), the higher is the detector sensitivity.

Set this value depending on the high or low thermal conductivity of the carrier gas in use.

- If `N` has been entered, scroll to `Fil volt` and set the filament voltage.
- Scroll to `Fil temp limit` and set the maximum filament temperature to protect the system. This value must always be higher than the detector temperature.

6. Scroll to `Filament power` and press **ON**. After a few seconds, the `Fil status` line displays a `Ready` message.
7. Scroll to `Carrier source` and press **ENTER**.
8. Scroll to the inlet connected to the TCD, `R` or `L`, and press **ENTER**.

NOTE If the reference gas or carrier gas is missing, the filament power turns off or will not switch on. The carrier source you select in step 8 indicates the source of the carrier gas for this filament protection sequence.

9. Press **LEFT SIGNAL** or **RIGHT SIGNAL** to open the detector **`SIGNAL (TCD)`** menu and verify the output signal.

Refer to the *Setting the TCD Signal Parameters* operating sequence on page 409 for instructions on setting the signal parameters.

OPERATING SEQUENCE

Programming a TCD with Non-DGFC

When a wide-bore or capillary column is used, the make-up gas line is required.

Before you begin, do the following:

- Verify that all detector gases are connected, a column is correctly installed, and the system is leak free.
- Check the oven temperature and injector temperature.

- Check the carrier gas flow depending on the packed or capillary column in use.
- When two injectors are configured, scroll to `Carrier source` and specify the `Left` or `Right` channel from which the carrier gas is flowing.
- When a wide-bore or capillary column is used, make sure the make-up gas line is connected.

WARNING! Hydrogen is a potentially dangerous gas. Refer to *Using Hydrogen* on page xl for safety information.

1. Adjust and measure the reference gas flow as follows:

   a. Scroll to `Ref flow` and press **ON**, then adjust the flow rate.

   b. Set the reference flow pressure on the relevant pressure regulator

   c. Measure the flow after stabilization. Repeat this step until the reference gas flow rate is correct.

2. Adjust and measure the make-up gas flow, when required, as follows:

   a. Scroll to `Mkup flow` and press **ON**, then adjust the flow rate.

   b. Set the make-up flow pressure on the relevant pressure regulator.

   c. Measure the flow after stabilization. If necessary, repeat this step until the make-up gas flow rate is correct.

3. Scroll to `Block temp` to enter the detector temperature.

4. Scroll to `Transfer temp` and set this temperature to a value higher than or equal to the column oven temperature.

5. Scroll to `Const fil temp?` to select the operating mode. When constant filament temperature is required, press **YES**; otherwise press **NO**.

   - If `Y` has been entered, scroll to `Fil temp` and set the filament temperature. This value must always be higher than the detector

temperature. The greater the difference between the two temperatures (ΔT), the higher the detector sensitivity.

Set this value depending on the high or low thermal conductivity of the carrier gas in use.

- If `N` has been entered, scroll to `Fil volt` and set the filament voltage.
- Scroll to `Fil temp limit` and set the maximum filament temperature to protect the system. This value must always be higher than the detector temperature.

6. Press **LEFT SIGNAL** or **RIGHT SIGNAL** to open the detector **`SIGNAL (TCD)`** menu and verify the output signal.

Refer to the *Setting the TCD Signal Parameters* on operating sequence page 409 for instructions on setting the signal parameters.

OPERATING SEQUENCE

Setting the TCD Signal Parameters

1. Press **LEFT SIGNAL** or **RIGHT SIGNAL** to enter the detector **`SIGNAL (TCD)`** menu.
2. Scroll to `Gain (x1 or x10)` and set the desired value. When the gain is x10, the system sensitivity is higher. This amplifies not only the detector output signal, but also the electrical and mechanical noise.
3. If required, scroll to `Neg polarity` and press **YES** to reverse the polarity output signal as a function of the thermal conductivity of the carrier gas versus the sample.
4. With all gas flows and temperatures adjusted and stable, and with the filaments on and stable, scroll to `Offset` and press **OFF**.
5. Adjust the course zero potentiometer of the detector board to give a signal of 1000.

6. Scroll to `Offset` and press **ON**, if required.
7. Scroll to `Autozero` and press **ON**, if required.
8. Turn `Baseline comp` **ON** if you want to compensate the baseline.

OPERATING SEQUENCE

Shutting Down the TCD

At the end of the analytical cycle, the filaments should be turned off and the carrier gas flow should be reduced to 50% of the normal operating flow to conserve gas supplies.

23

Pulsed Discharge Detector (PDD)

This chapter describes the operating sequences and principles for the Pulsed Discharge Detector (PPD).

Chapter at a Glance...

Operating Sequences

PDD Overview

The Pulsed Discharge Detector (PDD), shown in Figure 23-1, is an universal and highly sensitive non-radioactive and non-destructive detector. It is based on the principle of the photoionization by radiation arising from the transition of diatomic helium to the dissociative ground state.

NOTE This detector does not use radioactive sources.

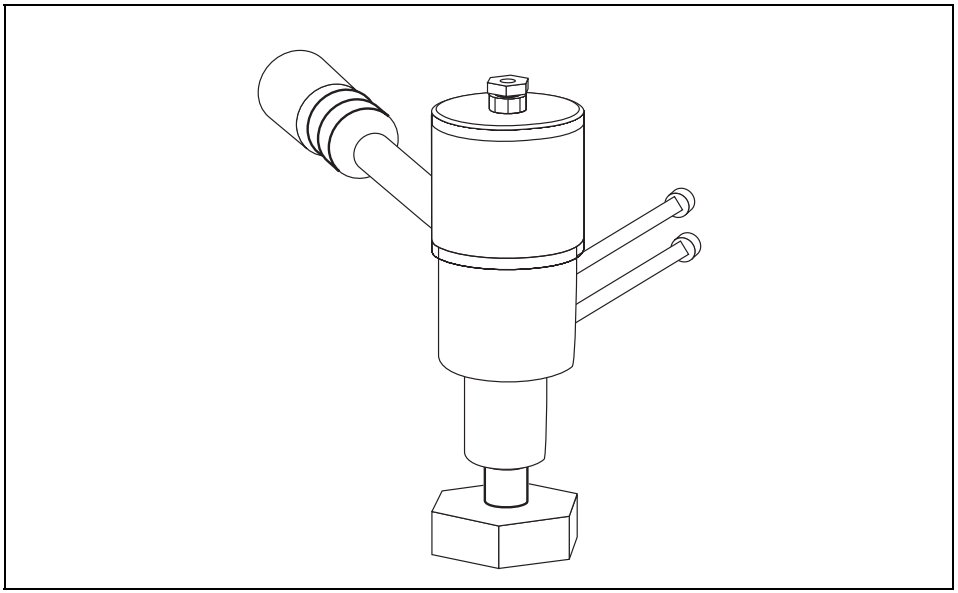

Figure 23-1. The Pulsed Discharge Detector

The response to organic compounds is linear over five orders of magnitude with minimum detectable quantities in the low picogram range. The response to fixed gases is positive with minimum detectable quantities in the low ppb range.
The performance of the detector is negatively affected by the presence of any impurities in the gas flows (carrier, discharge) then, the use of high quality grade of helium (99.999% pure or better) as carrier and discharge gases is strongly recommended. Because even the highest quality carrier gas may contain some water vapor and fixed gas impurities, a helium purifier is included as part of the detector system.

PDD Principle

PDD detector consists of a quartz cell supplied from the top with ultrapure helium as discharge gas that reaches the discharge zone consisting of a couple of electrodes connected to a high voltage pulses generator (Pulsed Discharge Module)

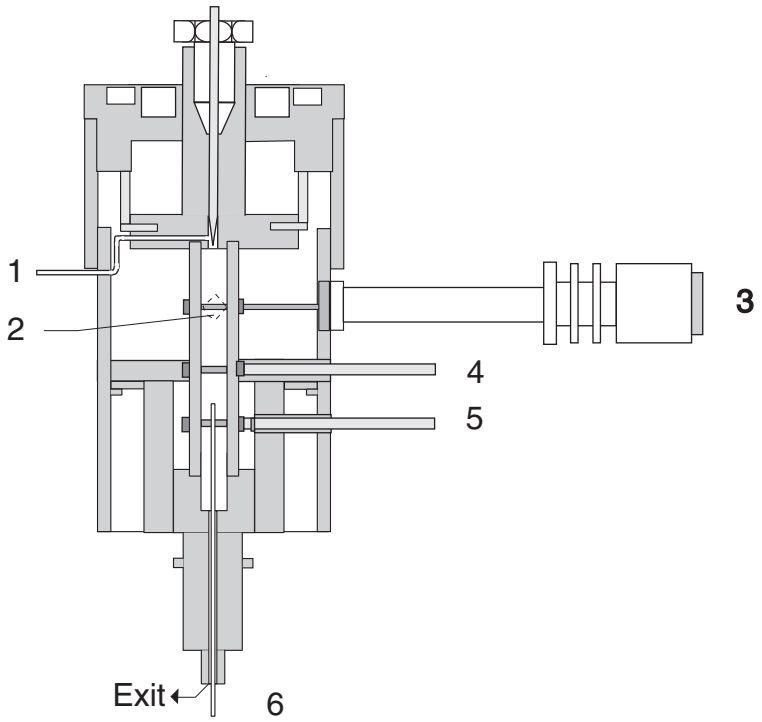

1. Discharge gas (Helium) Inlet	2. Discharge Zone
3. High Voltage Discharge Electrode	4. Polarizing Electrode (Bias)
5. Collector Electrode (Signal)	6. Column

Figure 23-2. PDD (Cutaway View)

The eluants from the column, flowing counter the flow of helium from the discharge zone, are ionized by photons at high energy arising from metastable

Helium generated into the discharge zone. The resulting electrons are accelerated and measured as electrical signal by the collector electrode.

The discharge and carrier gas flows are opposite. For this reason it is necessary that the discharge gas flow is greater that carrier gas flow to avoid the eluants from the column to reach the discharge zone with consequent discharge electrodes contamination.
The discharge and carrier gas are flowing out together from the bottom of the cell where it is possible to measure the sum of both at the outlet on the back of the instrument.

WARNING! During normal operation, the detector produce ultraviolet energy (UVA, UVB), some of which may be emitted. Do not watch the arc without eye protection.

PDD Gas Supply

PDD requires one gas flow only.

- discharge gas

The gas used for PDD discharge and carrier supply is helium

Flow Rate

For the discharge gas an appropriate calibrated restrictor ensures a stable flow of 30 mL/min with an inlet pressure of 60 psi (413 kPa).

Gas Purity

Helium must have a minimum purity of 99.999%, with < 20 ppm Ne impurity.

For trace analysis of fixed gases, it is strongly recommended 99.9999% purity helium with < 0.5 ppm Ne.

WARNING! The discharge and the carrier gases must always flow through the helium purifier.

Gas Lines Connections

Figure 23-3 shows the gas connections detector system diagram.

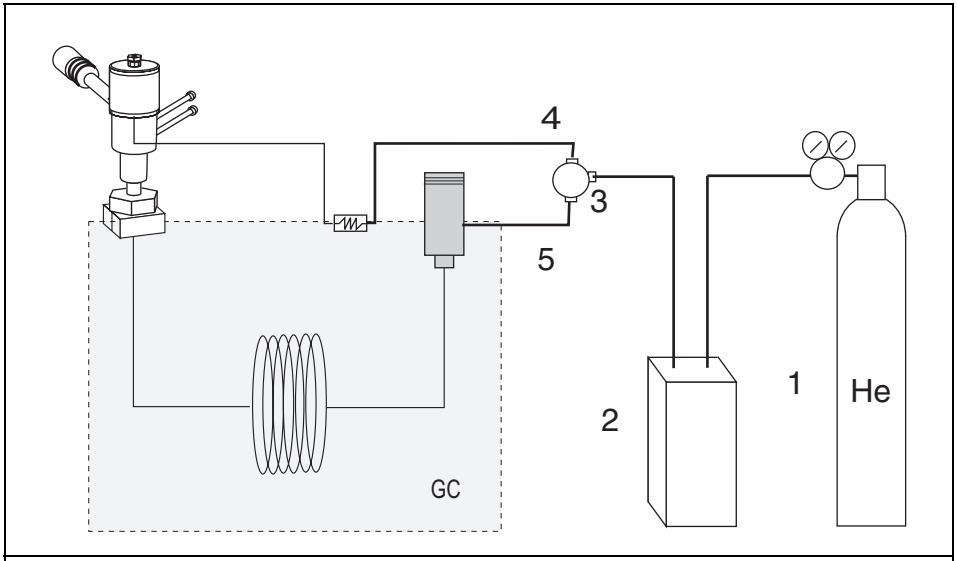

1. Helium Supply	2. Helium Purifier
3. 3-way connector	4. Discharge Gas Line
5. Carrier Gas Line	6. Column

Figure 23-3. Gas Connections

Before connecting gas lines verify that:

- The pressure regulators are commercial ultra-pure grade regulators with stainless steel diaphragms.
- The connecting tubes are thoroughly cleaned and baked before use.
- The gas regulator and the helium purifier must be properly purged. Refer to the following operating sequences for further details.

OPERATING SEQUENCE

Purging the Gas Regulator

1. Make sure that the on/off valve on the helium cylinder is completely closed.
2. Screw the fitting nut of the regulator into the helium cylinder. Go beyond finger-tight, but do not tighten the nut all the way because some leakage is required for purging operation.
3. Turn the output pressure regulating knob completely counterclockwise.
4. Open the cylinder on/off valve slightly and quickly close it again.
5. Adjust the tightness of the regulator connecting nut to allow a pressure reduction of about 690 kPa/sec (100 psi/sec).
6. When the pressure drops into the 1.4 - 3.4 MPa (200 - 500 psi) range, open the cylinder on/off valve slightly and quickly close it again.
7. Repeat the step 6 until it is certain that all the air is purged.
   On the final purge, tighten the regulator connecting nut as the pressure approaches the 2.1 - 3.4 MPa (300 - 500 psi) range.
8. Open the cylinder valve to pressurize the regulator once again.
9. Close the valve and observe the needle of the high pressure gauge for 15 minutes. If it does not move, there is no critical leak on the high pressure side of the regulator.

WARNING! Never use leak detecting fluids on any part of the system.

OPERATING SEQUENCE

Purging the Helium Purifier

1. Connect the helium cylinder pressure regulator to the inlet port of the helium purifier by using the appropriate connecting tube and fittings.

2. Turn the output pressure regulating knob clockwise until the gauge registers 345 kPa (50 psi)

3. Wait five minutes for equilibrium, then turn the regulating knob all the way counterclockwise.

4. Observe the needle of the output pressure gauge for 15 minutes. There will be a slight initial drop. If it does not move after that, consider all the connections are tight.

5. If necessary, use an electronic leak detector to locate any leaks. If a leak detector is not available, tighten all the fitting (including the output pressure gauge), and repressurize the system for another test.

WARNING! Never use leak detecting fluids on any part of the system.

6. Uncap the outlet tube of the helium purifier and purge the system for 15 to 30 minutes at 60 - 80 ml/min to eliminate air from the purifier getting material.

OPERATING SEQUENCE

Connecting the Gas Lines

1. Connect the helium purifier outlet port to a port of the 3-way connector provided by using the 1/16” OD connecting tube provided.

2. Connect the second port of the 3-way connector to the discharge gas inlet (calibrated restrictor), located on the rear panel of the GC, by using a sufficient piece of the 2x1 mm steeling steel connecting tube provided and the appropriate fitting.

3. Connect the last port of the 3-way connector to the DPFC or non-DPFC carrier gas inlet port, located on the rear panel of the GC, by using a sufficient piece of the 2x1 mm steeling steel connecting tube provided and the appropriate fitting.

PDD Installation

This operation allows the correct installation of the PDD on your TRACE GC.

Material needed

- PDD fixing tool

CAUTION **When packed columns are used (Only 1/8-inch OD), before installing PDD, verify that all the preliminary operations have been performed as described in *Connecting a Metal Packed Column to an PDD* operating sequence in Chapter 15.**

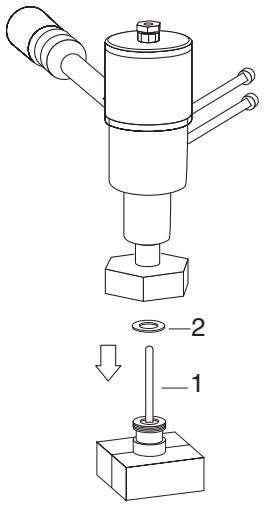

1. Fused Silica Capillary Tube or Capillary Column	2. Silver Ring

Figure 23-4. Installation of the PDD (1)

1. Place the PDD on the detector base body, paying attention to interpose the silver ring provided.

CAUTION **Place carefully the PDD perfectly vertical paying attention to not damage the fused silica capillary tube or the capillary column.**

2. Tighten the fixing nut by using the PDD fixing tool.

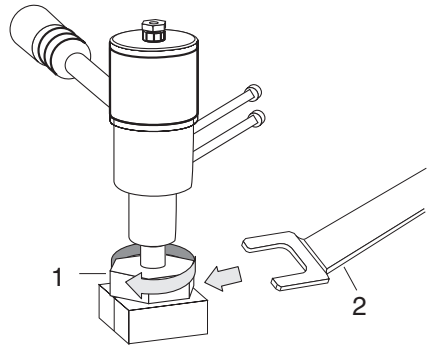

1. Detector Base Body	2. PDD Fixing Tool

Figure 23-5. Installation of the PDD (2)

3. Carefully connect the collector (signal) and polarizing (bias) cables coming from the detector control card to the detector cell.

4. Verify that the high voltage cable is properly connected to the pulsed discharge module.

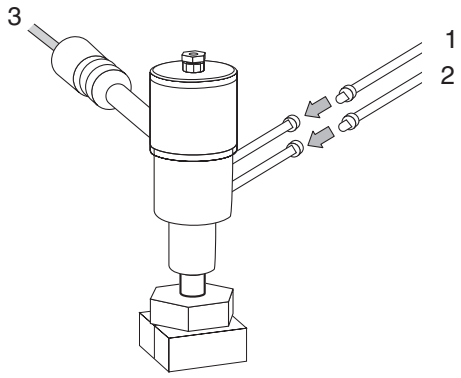

1. Polarizing (Bias) Cable	2. Collector (Signal) Cable
3. High Voltage Cable	

Figure 23-6. PDD Connecting Cables

Leak Check

It is critical for the system to be leak-tight. Leak test is strongly recommended before operating with PDD. Refer to the following operating sequences.

OPERATING SEQUENCE

PDD Cell Leak Check

Material required

- flowmeter
- sealing tool

WARNING! Do not use leak detecting liquids.

1. Open the discharge gas supply (helium).
2. Set an helium inlet pressure at 415 kPa (60 psi) to have a gas flow of 30 ml/min.

NOTE You may measure the helium discharge flow rate at the exit of the pneumatic module on the rear of the GC.

3. Cap the discharge gas exit on the rear of the GC by using the sealing tool provided.
4. Disconnect the outlet column end from the detector base body.
5. Plug the column connection of the detector base body.
6. Monitor the pressure by using an external gauge (e.g. the gauge installed on the bottle).
7. Let the system pressurize, then turn off the discharge gas flow. The shown values should not change. If the values drop down, one or more leaks are present. In this case:

8. Check the accessible, critical connections with a handheld electronic leak detector to find possible leaks.

9. If no leak is detectable in this way, contact your customer support organization. Refer to Appendix B, *Customer Communication*, for contact information.

OPERATING SEQUENCE

System Leak Check

With the PDD installed and the column properly connected, operate as follows:

1. Open the carrier and the discharge gas supply (helium).

2. Set the helium discharge pressure at 415 kPa (60 psi) to have a gas flow of 30 ml/min.

NOTE You may measure the helium discharge flow rate at the exit of the pneumatic module on the rear of the GC.

1. Cap the discharge gas exit on the rear of the GC by using the sealing tool provided.

2. Turn off the split and septum purge vents (if any).

3. Set the injector inlet to 100 kPa.

4. Wait until the system is equilibrated.

5. Turn off the inlet pressure and the discharge gas pressure.

6. The shown values should not change. If the values drop down, one or more leaks are present. In this case:

7. Check the accessible, critical connections (column to injector, column to detector, split and purge valves, septum cap) with a handheld electronic leak detector to find possible leaks.

8. If no leak is detectable in this way, contact your customer support organization. Refer to Appendix B, *Customer Communication*, for contact information.

PDD Menu

The **DET(PDD)** menu contains the PDD control parameters.
Press **LEFT DETECT** or **RIGHT DETECT** to open the menu shown in Table 23-1.

Table 23-1. Detector (PDD) Menu

Menu	Range	Comment
RIGHT DET (PDD)		This line is the menu title bar.
Pulse generator	On/Off	This line indicates the pulsed discharge module status. Press **ON** to turn on the voltage supply from the PDD control card to the module which will generate the high voltage required to supply the detector. Press **OFF** to turn off the module.
Base temp	On/Off, 0–450 °C	This indicates the detector base body temperature. Press **ON** to turn on the heater and display the actual and setpoint values. Press **OFF** to turn off the heater and display the actual value.
Signal pA	Not editable	This parameter shows the standing current level in picoamperes.

OPERATING SEQUENCE

Programming a PDD

Before you begin, do the following:

- Verify that helium purifier and discharge gas are connected, a column is correctly installed, and the system is free of leaks.
- Check the oven temperature and injector temperature.

1. Press **LEFT DETECT** or **RIGHT DETECT** to open the **`DET(PDD)`** menu.
2. Scroll to `Base temp` and set the detector base body temperature according to the analytical requirement.
3. Scroll to `Pulse generator` and turn it **ON**.
4. Read the `Signal pA` value.
   If the system is clean, the signal value must be stabilized lower that 2000 pA.
   Observe the pink color of the discharge generated inside the detector.
   If a purple color of the discharge is observed, impurities or leaks in the discharge gas line are present.

After a short time, the baseline should stabilize to the standing current level of the system.

5. Press **LEFT SIGNAL** or **RIGHT SIGNAL** to open the detector **`SIGNAL (PDD)`** menu and verify the output signal.

Refer to the *Setting the PDD Signal Parameters* operating sequence on page 425 for more information.

OPERATING SEQUENCE

Setting the PDD Signal Parameters

1. Press **LEFT SIGNAL** or **RIGHT SIGNAL** to enter the detector **`SIGNAL (PDD)`** menu.
2. Scroll to `Range 10^ (0...3)` and set the electrometer amplifier input range. `0` (10^0) is the most sensitive.
3. Turn `Analog filter` **ON** if you want to filter the output signal.
4. Scroll to `Autozero` and press **ON**.
5. If offset is required, scroll to `Offset` and enter a numeric value or press **ON** to recall the last offset from memory.
6. Turn `Baseline comp` **ON** if you want to compensate the baseline.

NOTE

If the `Range 10^` is set 2 or 3, the small variation of the output signal is not detected. For this reason, the, `Signal pA`, parameter will be not displayed in the **`DETECTOR PDD`** menu.

SECTION VI

Autosamplers

This section contains informations about AS 2000 and HS 2000 programming with the TRACE GC keypad.

Chapter 24, *AS 2000 Autosampler*, describes how to program and control the AS 2000 autosampler by using the TRACE GC keypad.

Chapter 25, *HS 2000 Autosampler*, describes how to program and control the HS 2000 autosampler by using the TRACE GC keypad.

24

AS 2000 Autosampler

This chapter describes how to program and control the AS 2000 autosampler by using the TRACE GC keypad.

Chapter at a Glance...

Autosampler Overview

This paragraph contains the instructions to program AS 2000 parameters.

The AS 2000 autosampler functions can be controlled through:

- AS 2000 Control Module, referring to the instructions reported in the AS 2000 Autosampler operating manual.
- Data System (Chrom-Card or ChromQuest), referring to the instructions reported in the relevant operating manual.
- TRACE GC keypad, referring to the instructions reported in this chapter.

CAUTION **The autosampler setup involving alignment of the various components must be done from the AS 2000 control module.**

The functions that the TRACE GC can control include:

- prewash volume and solvent
- rinse cycles, volume, and solvent
- sample volume

- internal standard volume
- injection, including special instructions such as:
  - — number of plunger strokes
  - — viscosity delay
  - — air gap volume and mode
  - — injection speed
  - — pre- and post-injection delay time
- postwash cycles and solvent

NOTE To familiarize with the autosampler parameters refer to Table 24-5 on page 435

Groups of samples may be automatically run under different analytical conditions programming a *sequence* of samples. A *sequence* describes how samples are treated in the injection stage. The sequence includes the instructions for sampling, number of samples and their position on the sample tray. Beside the sequence specifies the method that will be used to process each samples group.
Refer to paragraph *Sequence Programming* on page 477 for instructions.

NOTE All autosampler functions can be programmed into an analytical method. Refer to Chapter 28, *Using Analytical Methods*, for more information on developing a method.

Compatible Hardware

Several autosampler models can work with the TRACE GC. The menus and instructions in this chapter apply specifically to the AS 2000.

Setting Up the Autosampler

To configure the autosampler, press **CONFIG** and choose **AUTOSAMPLER**. See Chapter 3, *Configuration*, for more instructions.

NOTE If you haven't installed an autosampler, the TRACE GC will not display any menus concerning the autosampler or sequences. An error message will be displayed.

To set autosampler parameters, press **AUTOSAMPLER**. Table 24-1 displays the **AUTOSAMPLER** menu.

AS 2000 Autosampler Menu

Press **AUTOSAMPLER** to open the **AUTOSAMPLER** menu shown in Table 24-1.

Table 24-1. The AS 2000 Autosampler Menu

Menu	Range	Comments
AUTOSAMPLER		This line is the menu title bar.
Pre wash solvent	A, B, C, D	This parameter specifies the solvent vial. Press **MODE/TYPE** to change the solvent vial.
Pre wash cycles	0–15 times	This parameter specifies the number of times the syringe is prewashed with solvent.
Sample rinses	0–15 times	This parameter specifies the number of times the syringe is prewashed with sample.
Rinse volume	0.0–99.9, 100–500 µl	This parameter specifies the amount of sample or solvent pulled for each rinse.
Int Std settings[1]	See Table 24-2	This parameter specifies the internal standard settings.
Injection vol	0.0–99.9, 100–500 µl	This parameter specifies the amount of sample to be injected for each run.
Plunger strokes	0–15 times	This parameter specifies the number of plunger strokes to eliminate bubbles.
Viscosity delay	0–15 seconds	This parameter specifies how long the plunger will remain at the top of the stroke (to account for viscous samples).
Injection speed	1–100 µl/s, max (unitless)	This parameter specifies how fast the plunger descends. Use max for speeds over 100 µl/s.
Post wash solvent	A, B, C, D	This parameter specifies the solvent vial for postwash. Press **MODE/TYPE** to change vials.
Post wash cycles	0–15 times	This parameter specifies the number of times the syringe is postwashed with solvent.
Extended control	See Table 24-3	This parameter offers more injection options. Press **MODE/TYPE** to open a submenu.
DblPro inlets	Right, Left, Both	Press **ENTER** or **MODE/TYPE** to open a submenu.

Table 24-1. The AS 2000 Autosampler Menu (Continued)

Menu	Range	Comments
`When no vial abort`	See Table 24-4.	Press **ENTER** to set a list to select from.

1. This item appears only if you configure the internal standard option.

Internal Standard Use

When you use an internal standard method with the autosampler, you specify a position in the autosampler tray for a vial of internal standard solution. The autosampler then loads a specified volume of the internal standard solution in the syringe before it loads a sample. You can also use the internal standard settings to specify a solvent for a solvent flush injection technique. In this case, a solvent takes the place of the internal standard solution.

You can specify an air gap in the syringe between the internal standard solution or the solvent and the sample. This is the *Post air gap* mode. To have an air gap both before and after the internal standard solution or solvent, choose the *Double air gap* mode.

The internal standard settings item in the **`AUTOSAMPLER`** menu appears only if you have already set the `Use Int Std` menu item in the **`CONFIGURE AUTOSAMPLER`** menu to `Yes`. Refer to Chapter 3, *Configuration*, for more information.

When you scroll to `Int Std Settings` in the **`AUTOSAMPLER`** menu and press **ENTER**, the submenu shown in Table 24-2 is displayed.

Table 24-2. The Internal Standard Settings Submenu

Menu	Range	Comments
`INT STD SETTINGS`		This line is the menu title bar.
`Int Std volume`		The volume of internal standard or solvent loaded into the syringe.
`Air gap mode`	post, double	Select `post` for a single air gap after the internal standard solution or solvent. Select `double` for an air gap before *and* after.

Table 24-2. The Internal Standard Settings Submenu

Menu	Range	Comments
`Air gap volume`		The volume of the air gap.
`Int std vial`		The tray position of the internal standard vial.

Extended Control

The extended control menu allows you to specify special types of injection, such as the solvent flush. You might use the solvent flush method when you need to make sure that all of a high-boiling sample has been injected. The syringe draws solvent, a gap of air, and finally the sample.

You can also control the amount of time the needle remains inserted without injecting. For example, to counter possible discrimination effects caused by distillation from the syringe needle, the sample can be drawn into the syringe and the needle allowed to heat up for a few seconds before injection. You would use this menu to set the amount of time the needle remains inserted before injection.

Table 24-3. Extended Control Menu

Menu	Range	Comments
`EXTENDED CONTROL`		This line is the menu title bar.
`Air gap volume`	0.0–99.9 µl, 100–500 µl	This parameter specifies the amount of air between the solvent, sample, and internal standard for a solvent flush injection.
`Samp draw speed`	0–100	This parameter specifies how quickly the sample is drawn from the vial.
`Pre dwell time`	0–630 seconds	This parameter specifies how long the needle remains inserted without injecting for a hot needle injection.
`Post dwell time`	0–630 seconds	This parameter specifies how long the needle remains inserted after injection.
`Clean at each`	injection/vial/ range	This parameter specifies when the syringe should be cleaned. Press **MODE/TYPE** to change the setting. `Range` refers to the ranges specified in subsequences.
`Solvent wash volume`	depends on syringe volume	This parameter specifies the volume of the solvent used to flush the syringe.

When No Vial Abort

Table 24-4. When No Vial Abort Menu

Menu	Range	Comments
ON MISSING AS VIAL		This line is the menu title bar.
Skip to next		When set, the autosampler skips an eventual missing sample vial and moves to find the next vial. The sample sequence and the sample table of the data system will be not affected
Abort sequence		When set, the sequence will be aborted after three missing vial.

TRACE GC - AS 2000 Parameters Comparison Table

To familiarize with the autosampler parameters, the following Table 24-5 reports the comparison between the parameters listed in the **AUTOSAMPLER** menu and the corresponding parameters you find on the AS 2000 Control Module.

Table 24-5. Parameters Comparison Table

TRACE GC		AS 2000 Control Module	
AUTOSAMPLER Menu	Submenu	Parameter	Program Page
Pre wash solvent		S1 W	PP31
Pre wash cycle		Cnt YY	PP31
Sample rinses		Cln Y	PP33
Rinse volume		Fill K.K	PP32
Pre wash solvent		S1 W	PP31
Internal std setting	Int Std volume	IS/Slv XX	PP32.1
	Air gap mode	Mod Z.Z	PP32.1
	Air gap volume	Air YY	PP32.1
	Int std vial	S/S Y	PP37.1
Injection vol		Samp YY	PP32
Plunger strokes		B.E. Z	PP33
Viscosity delay		D1 K	PP33
Injection speed		µls Y	PP34
Post wash solvent		S1 W	PP35
Post wash cycles		Cnt YY	PP35
Extended control	Air gap volume	Air X.X	PP32
	Samp draw speed	µls W	PP33
	Pre dwell time	Pre Zs	PP34
	Post dweel time	Post Ws	PP34
	Clean at each	PP31 - PP35	Mod Z
	Solvent wash volume	PP31 - PP35	µl K.K
DblPro inlets	Refer to ***Starting Setup Routine*** in Chapter 7 of the AS 2000 Operating Manual		

25

HS 2000 Autosampler

This chapter describes how to program and control the HS 2000 autosampler by using the TRACE GC keypad.

Autosampler Overview

This paragraph contains the instructions to program HS 2000 parameters.

The HS 2000 autosampler functions can be controlled from:

- HS 2000 Control Module, referring to the instructions reported in the HS 2000 Autosampler operating manual.
- Data System (Chrom-Card or ChromQuest), referring to the instructions reported in the relevant operating manual.
- TRACE GC keypad, referring to the instructions reported in this chapter.

CAUTION **The autosampler setup involving alignment of the various components must be done from the HS 2000 control module.**

The functions that the TRACE GC can control include:

- Incubation mode
- Sample oven temperature and shaker time
- Syringe temperature and syringe filling
- Sample draw and enrichment

- Injection

NOTE To familiarize with the autosampler parameters refer to Table 25-8 on page 444

Groups of samples may be automatically run under different analytical conditions programming a *sequence* of samples. A *sequence* describes how samples are treated in the injection stage. The sequence includes the instructions for sampling, number of samples and their position on the sample tray. Beside the sequence specifies the method that will be used to process each samples group.
Refer to paragraph *Sequence Programming* on page 489 for instructions.

NOTE All autosampler functions can be programmed into an analytical method. Refer to Chapter 28, *Using Analytical Methods*, for more information on developing a method. A sequence cannot be programmed into a method.

Compatible Hardware

Several autosampler models can work with the TRACE GC. The menus and instructions in this chapter apply to the HS 2000.

Setting Up the Autosampler

To configure the autosampler, press **CONFIG** and choose **AUTOSAMPLER**. See Chapter 3, *Configuration*, for more instructions.

NOTE If you haven't installed an autosampler, the TRACE GC will not display any menus concerning the autosampler or sequences. An error message will be displayed.

To set autosampler parameters, press **AUTOSAMPLER**. Table 25-1 displays the **HS AUTOSAMPLER** menu.

HS 2000 Autosampler Menu

Press **AUTOSAMPLER** to see the **AUTOSAMPLER** menu shown in Table 25-1.

Table 25-1. The HS 2000 Autosampler Menu

Menu	Range	Comments
HS AUTOSAMPLER		This line is the menu title bar.
Incubation mode	Cost, Prog, MHE See Table 25-2.	This parameter specifies the sample incubation mode setting.
Sample Oven	See Table 25-3.	This parameter specifies the sample oven setting.
Syringe	See Table 25-5.	This parameter specifies the syringe filling setting.
Sample draw	See Table 25-6.	This parameter specifies the sample draw setting.
Injection	See Table 25-7.	This parameter specifies the injection setting.

Incubation Mode

This menu allows you to specify the sample incubation operating mode of the HS 2000 headspace autosampler.

In **AUTOSAMPLER** menu, scroll to Incubation mode, then press **ENTER** to open the submenu shown in Table 25-2.

Table 25-2. Incubation Mode Submenu

Submenu	Comments
INCUBATION MODE	This line is the submenu title bar.
Const	Choose this option to allow the sample to be sequentially programmed at a programmed temperature with a constant conditioning time.
Progr	Choose this option to allow the sample to be conditioned at a programmed temperature with a conditioning time that increases for each sample according to a programmed additional time. See *Sample Oven* submenu
MHE	Choose this option to allow automatic multiple extraction steps of headspace from the same sample vial repeatedly.

CAUTION **To use this incubation mode, it is necessary to install the MHE device in position A on the cover of the incubation oven.**

Scroll to the incubation mode to be used and press **ENTER** twice to confirm selection. An asterisk appears to the left of the incubation mode selected. To return **AUTOSAMPLER** menu press **CLEAR**.

Sample Oven

This menu allows you to specify the conditioning and shaker parameters. The vial shaking is used to decrease the time necessary for the sample equilibrium.

CAUTION **Shaking is only effective for liquid sample. When the conditioning temperature is higher than 90 °C, the shaker should not be used.**

In **AUTOSAMPLER** menu, scroll to `Sample oven`, then press **ENTER** to open the submenu shown in Table 25-2.

Table 25-3. Sample Oven Submenu

Submenu	Range	Comments
SAMPLE OVEN		This line is the menu title bar.
Oven temp	40–150 °C	This line specifies the incubation oven temperature.
Incubation time	00:00-23:59 hh:mm	This line specify the incubation time, expressed in hours and minutes, for the sample conditioning.
Shaker time on	On/Off 0.0–9.9 min	This line specifies the activation time of the sample vials shaking. See Table 25-4.
Shaker time off	On/Off 0.0–9.9 min	This line specifies the deactivation time of the sample vials shaking. See Table 25-4.
Progressive[1]	00:00–23:59 hh:mm	This line specifies the sample conditioning time, expressed in hours and minutes, which is progressively added to each vial of the sequence.

1. This line is shown only if `Prog` Incubation Mode has been selected in **INCUBATION MODE** submenu. See *Incubation Mode* submenu on page 439.

Table 25-4. Shaker Time

Shaker Time	Comments
`on = 0`	The samples are ***not*** shaken.
`on > 0 ; off = 0`	The samples are ***always*** shaken.
`on > 0 ; off > 0`	Shaking will occur ***discontinously***

Syringe Filling

This menu allows you to specify the syringe temperature, and the sample drawing parameters.

In **`AUTOSAMPLER`** menu, scroll to `Syringe`, then press **ENTER** to open the submenu shown in Table 25-5.

Table 25-5. Syringe Submenu

Submenu	Range	Comments
`SYRINGE FILLING`		This line is the menu title bar.
`Enable pre-fill`	On/Off	When enabled, this function allows the vial to be pressurized before sampling the headspace vapors. The volume used to pressurize the vial is the syringe filling volume. See *Sample Draw*.
`Temperature`	40-150 °C	This line specifies the syringe temperature.
`Fill volume`	On/Off 0–2250 mL for standard syringe	This line specifies the volume to be drawn into the syringe to purge it and the needle. This volume should exceed at least 10% the injection volume, considering that the available volume is 10% less than the syringe capacity
`Fill counts`	0–15	This line specifies the syringe filling strokes from the same vial. This to have a homogeneous phase between the headspace vial and the sample in the syringe resulting in better reproducibility.

Table 25-5. Syringe Submenu (Continued)

Submenu	Range	Comments
`Fill delay`	0–63 seconds	This line specifies the delay time between each movement of the syringe plunger. This function allows the headspace vapors in the needle and in the syringe to be in equilibrium with the gas in the vial.

Sample Draw

This menu allows you to specify the sample injection volume.

In **`AUTOSAMPLER`** menu, scroll to `Sample draw`, then press **ENTER** to open the submenu shown in Table 25-6.

Table 25-6. Sample Draw Submenu

Submenu	Range	Comments
`SAMPLE DRAW`		This line is the menu title bar.
`Sample draw`	0–2250 mL for standard syringe	This line specifies the volume of vapor to be rinsed and injected. The maximum injectable value is 10% less than the syringe capacity.
`Enrichment`	1–9	This line specifies the number of samplings to be carried out from the same sample vial. When >1, the headspace vapors are injected into the GC the number of times selected. The start signal to the GC is sent after the last injection.
`Enrichment delay`	0–63 seconds	This line specifies the delay time between two consecutive injection.
`Draw speed`	1.0–99.9 ml/min	This line specifies the speed of the syringe plunger during the headspace gas drawing phase from the vial. A speed of 30 mL/min is commonly used.

Injection

This menu allows you to specify the injection parameters.

In **AUTOSAMPLER** menu, scroll to `Injection`, then press **ENTER** to open the submenu shown in Table 25-7.

Table 25-7. Injection Submenu

Submenu	Range	Comments
`INJECTION`		This line is the menu title bar.
`Pre-inj delay`	0–63 seconds	This line specifies the syringe needle waiting time in the injector **before** the sample is injected. During this time the syringe needle is warmed up to the injector temperature.
`Post-inj delay`	0–63 seconds	This line specifies the syringe needle waiting time in the injector **after** the sample is injected. During this time the complete transfer of the vapor into the column is carried out before the syringe is removed from the injector.
`Inject speed`	1–99.9 ml/min	This line specifies the speed of the syringe plunger during the injection phase. This parameter affect both chromatographic efficiency and sample integrity. - High injection speeds result in pressure increase in the injector with the risk of sample being lost in the septum purge line. - Low injection speeds produce band broadering with the risk of peak deformation.

TRACE GC - HS 2000 Parameters Comparison Table

To familiarize with the autosampler parameters, the following Table 25-8 reports the comparison between the parameters listed in the **AUTOSAMPLER** menu and the corresponding parameters you find on the HS 2000 Control Module.

Table 25-8. Parameters Comparison Table

TRACE GC		HS 2000 Control Module	
AUTOSAMPLER Menu	Submenu	Parameter	Program Page
Incubation mode	Const	V	PP30
	Progr	V	PP30
	MHE	V	PP30
Sample Oven	Oven temp	°C xxx	PP31a - PP31b - PP31c
	Incubation time	hh:mm yy.yy	PP31a - PP31b - PP31c
	Shaker time on	On xx	PP32
	Shaker time off	Off yy	PP32
	Progressive[1]	h:mm z.zz	PP31b
Syringe	Enable pre-fill	PreFILL Yes/No	PP33
	Temperature	°C yyy	PP33
	Fill volume	ml x.xx	PP33.1
	Fill counts	Cnt vw	PP33.1
	Fill delay	Dly yz	PP33.1
Sample draw	Sample draw	ml k.kk	PP33.2
	Enrichment	# s	PP33.2
	Enrichment delay	Dl zz	PP34
	Draw speed	Spd xx.x	PP33.2
Injection	Inject speed	Spd xx.x	PP34
	Pre-inj delay	Pre uu	PP34
	Post-inj delay	Post vv	PP34

1. This line appears when Prog has been selected in Incubation Mode menu.

SECTION VII

Automation and Manual Control

This section contains descriptions of automated and manual control options and sequences for the TRACE GC.

Chapter 26, *Automated Functions*, shows you how to automate signal, valves, and external events by scheduling them either in real time (clock table events) or at certain points during a run (run table events). It also discusses the run log, an automated record of run deviations.

Chapter 27, *Manual Functions*, describes how to control signal and valve events manually.

26

Automated Functions

This chapter shows you how to automate signal, valves, and external events by scheduling them either in real time (clock table events) or at certain points during a run (run table events). It also discusses the run log, an automated record of run deviations.

Chapter at a Glance...

Operating Sequences

The Clock Table

Clock table events happen at certain times on specific days, based on a real-time clock. The real-time clock, once set, is backed up by a battery that maintains the clock time even when the GC is powered down. Among the functions you can program are:

- loading a method
- starting the GC
- starting a sequence
- opening or closing valves
- starting external events for other devices, such as a mass spectrometer or automatic actuated valves

The devices you can control depend on the options you purchased and how your TRACE GC was configured at the factory.

If no events are programmed, the **`CLOCK EVENTS`** menu looks like the one on the left in Figure 26-1. The menu on the right shows a **`CLOCK EVENTS`** menu with eight events. You can store up to 10 events.

In Figure 26-1, the right **`CLOCK EVENTS`** menu specifies several events.

The TRACE GC will load Method #10 at 4:00 A.M. At 4:56 A.M., `Valve 2` shuts off. Then `External Event #1` turns on and `Valve #1` (a gas sampling valve) loads one minute later. `External Event #1` turns off at 5:00 A.M. `Sequence #10` begins running at 7:00 A.M. (using `Method #10` loaded earlier).

The events shown in the right-hand menu in Figure 26-1 will occur every day because the `Mode` parameter is set to `cont cycle` (continuous cycle). You can schedule events to happen:

- once
  Use `Single cycle` to schedule a one-time event.
- every day
  Use `Continuous cycle` to prepare and start the TRACE GC for each day's first run.

- on certain days
  Use `Specific cycle` to specify an event to happen on specific days of the week.

You can also discontinue clock time events for a time.

```
   CLOCK EVENTS
<none>
Add clock event  <
Mode: not active
```

```
        CLOCK EVENTS                ↓
04:00      Load meth          10 <
04:56      Valve 2            Off
04:57      External Event 1   On
04:58      Valve 1            Load
04:59      Valve 1            Inj
05:00      External Event 1   Off
07:00      Start seq          10
Add clock event
Mode:      Cont cycle
```

Figure 26-1. Two Clock Events Menus (Empty and Loaded)

NOTE When clock events fall during a run or an active sequence, the TRACE GC ignores them. For instance, if you have scheduled a bakeout at 9:00 A.M., it will not occur if the TRACE GC is running a sequence of samples. To program an event to occur during a run, refer to *The Run Table* on page 454 for more information on run time events. You can include run table events in an analytical method, but not clock table events.

OPERATING SEQUENCE

Creating a Clock Time Event

Use the following sequence to enter new clock time events.

1. Press the **CLOCK TABLE** key.

2. Scroll to `Add clock event`.

3. Press **ENTER** or **MODE/TYPE** to display the **`SELECT EVENT TO ADD`** submenu, shown in the first column of Table 26-1.

4. Scroll to the type of event you want to add. Press **ENTER** or **MODE/TYPE** to display the submenu for that item.

Table 26-1. Select Event to Add Menu and Submenus

Menu	Submenu	Comments
`SELECT EVENT TO ADD`		This line is the menu title bar.

`Load Method <`	`LOAD METHOD`
	`Method no.`
	`Clock time`
		With the numeric keypad, enter a method number (1–10) and a time in hours and minutes (00:00–23:59).

`Start GC`	`CLOCK TIME EVENT`
	`Start GC at`
	`Clock time`
		With the numeric keypad, enter a time in hours and minutes (00:00–23:59).

`Start seq`	`CLOCK TIME EVENT`
	`Start sequence`
	`Sequence no.`
	`Clock time`
		With the numeric keypad, enter a sequence number (1–5) and a time in hours and minutes (00:00–23:59).

`External Event`	`SELECT EXTERNAL EVENT to add`
	`External Event #1`
	`----------`
	`External event #8`
	`Clock time`
	`Setpoint.`
		Press **ENTER** to enter submenu With the numeric keypad, enter an event number and a time in hours and minutes (00:00–23:59).

`Baseline comp`	`CLOCK TIME EVENT` `Start baseline compensation at Clock time`	With the numeric keypad, enter a time in hours and minutes (00:00–23:59)

5. If you are setting up a method or a sequence, enter a method number (1–10) or a sequence number (1–5) and press **ENTER**.

6. Use the numeric keypad to enter the time you want the event to take place, based on a 24-hour clock. You must enter four digits. For example, for 3:30 p.m., type `1530`. Press **ENTER** to record the time in memory.

7. If you are programming an external event, use the **ON/YES** or **OFF/NO** key to enter the setpoint. If you program `External Event #1` to turn on at a certain time, you should add another event to turn it off at a later time.

NOTE Because the TRACE GC ignores any clock table event that falls during a run, you should program any event you want to occur during a run in the run table. Refer to *The Run Table* on page 454 for more information about run time events. You can include run table events in an analytical method, but not clock table events.

8. Press **CLEAR** twice to return to the main **`CLOCK EVENTS`** menu.

OPERATING SEQUENCE

Programming Occasionally Occurring Events

The `Mode` function lets you set the clock time events to occur at different times of the week. Use the following sequence to program the days the events will happen.

1. Scroll through the main **`CLOCK TABLE`** menu to `Mode`. Press **ENTER** or **MODE/TYPE** to display the **`CLOCK EVENT MODE`** submenu, shown in Table 26-2.

Table 26-2. Mode Submenus

Menu	Submenus	Comments
`CLOCK EVENT MODE`		This line is the menu title bar.
`Not active`		Choose this option to suspend the clock events indefinitely.
`Single cycle`		Choose this option to make the clock events occur only once.
`Continuous cycle`		Choose this option to make the clock events happen every day.

Table 26-2. Mode Submenus (Continued)

Menu	Submenus	Comments

`Specific cycle`	`CLOCK EVENT MODE`
	`Use ENTER to selct/ deselct active days CLEAR to exit`
	`Sunday`
	`Monday`
	`Tuesday`
	`Wednesday`
	`Thursday`
	`Friday`
	`Saturday`
		Select `Specific cycle` and press **ENTER** or **MODE/TYPE** to display the submenu. Select the days you want the clock events to occur and press **ENTER** after each selection. The asterisk will appear on chosen days.

2. Select one of the choices in the **`CLOCK EVENT MODE`** submenu, depending on how often you want the event to occur. Press **ENTER**. If you want the event to occur on specific days, select `Specific cycle` and press **ENTER** or **MODE/TYPE**.

3. In the `Specific cycle` submenu, select the day you want the events to occur and press **ENTER**. Repeat this step to schedule additional days.

4. Press **CLEAR** twice to return to the **`CLOCK EVENTS`** main menu.

OPERATING SEQUENCE

Editing a Clock Time Event

You can change the time of day that a clock time event occurs. However, if you want to change the type of event that occurs, you must delete the current event and add a new one. For example, if you want External Event #2 to turn on at 5:00 A.M. instead of External Event #1, delete the event `05:00 External Event#1 On` using the *Deleting a Clock Time Event* operating sequence. Use the *Creating a Clock Time Event* operating sequence to add a new event for Valve 2 to load at 5:00 A.M.

Use the following sequence to edit the time a clock event occurs.

1. Press **CLOCK TABLE** and scroll to the item you want to edit.
2. Press **ENTER** or **MODE/TYPE** to display the submenu for that item.
3. Using the numeric keypad, enter a new time for the event. Press **ENTER**. The **`CLOCK EVENT`** menu now shows the item at its new time.
4. Press **CLEAR** twice to return to the **`CLOCK EVENTS`** main menu.

OPERATING SEQUENCE

Deleting a Clock Time Event

Use the following sequence to delete an event from the **`CLOCK EVENT`** menu.

1. Press **CLOCK TABLE** and scroll to the item you want to delete.
2. Press **CLEAR** once.
3. The following message appears on the display:

   `You are about to delete the above entry. Delete it? Y/N`

   Press **YES** to delete or **NO** to keep the event.

The Run Table

You can program events to happen during a run. For instance, a valve could open two minutes into a run. You can include a run table for each analytical method you create. You can program:

- an output signal adjustment, such as auto zero (see *Controlling Output Signals* in Chapter 27 for a discussion of signal compensation)
- a valve to open or close (see *Controlling Output Signals* in Chapter 27 for a discussion of valve types and options)
- an external event from another device

NOTE Eight external events are available, but each extra valve (those other than inlet valves) takes up two external events: one to open the valve, the other to close it. If you have one valve configured, only six external events will appear on your menus.

Whereas the clock table events occur on a 24-hour real-time clock, the Run Table events occur on a decimal-minute clock that begins counting when the run starts.

Figure 26-2 shows two **RUN TIME EVENTS** menus, one without entries and one with several entries.

```
RUN TIME EVENTS

<none>

Add run time event<

Ext. event defaults
```

```
RUN TIME EVENTS                ↓

00.00  RFID            Off <

 1.00  RFID              On

 1.00  RFID         range 0

17.00  RFID         range 1

35.00  RFID         range 0

Add run time event
```

Figure 26-2. Two Run Time Events Menus (Empty and Loaded)

The first three events shown in the loaded menu in Figure 26-2 concern the right detector, a flame ionization type (RFID). It starts the run in the off position. At three minutes it turns on and adjusts its signal to the highest sensitivity.

At 17 minutes the RFID again adjusts the range, this time to the lowest sensitivity. At 35 minutes it returns the range to 0.

You can program events like those shown in Figure 26-2 with the **`Run Time`** menu and submenus.

OPERATING SEQUENCE

Creating a Run Time Event

Use the following sequence to enter new run time events.

1. Press **RUN TABLE** and scroll through the menu until the selection arrow points to `Add run time event`.

2. Press **ENTER** or **MODE/TYPE** to display the first **`RUN TABLE`** submenu.

```
  SELECT EVENT to add

Signal                  <
External Event
```

3. Scroll to the type of event you want to add: `signal` or `external`. Press **ENTER** or **MODE/TYPE** to display the submenu for that item, shown in the first column of Table 26-3.

Table 26-3. Select Event to Add Options and Submenus (1)

Option	Submenu 1	Comments
`Signal`	`Select Parameters to add`	This line is the submenu title bar.
	`RFID Autozero`	Choose this option to perform autozeroing
	`RFID Range (0..3)`	Choose this option to adjust detector Range

`External Event`	`Select Event to add`
	`External event #1`
	`----------`
	`External event #8`
		Choose this option to program up to eight external events

4. Select the appropriate kind of `signal`or `external` event and press **ENTER** or **MODE/TYPE** to open another submenu, shown in the first column of Table 26-4.

Table 26-4. Select Event to Add Options and Submenus (2)

Option	Submenu 1	Comments

`RFID Autozero`	`RUN TIME EVENT`
	`RFID auto zero`
	`Run time`
		With the numeric keypad, enter a time (0.00–999:99).

`RFID Range (0..3)`	`RUN TIME EVENT`
	`RFID Range`
	`Run time`
	`Range 10^`
		With the numeric keypad, enter Range number [(0 - 3), (0 - 2 for FPD)] and time (0.00–999.99).

`External event #1 <`
`----------`
`External event #8`
	`RUN TIME EVENT`
	`External event #1`
	`Run time`
	`Setpoint`
		With the numeric keypad, enter an a time (0.00-999.99) and the On/Off setpoint

For example, if you previously selected a valve event, at this stage you designate which valve will be affected. If you choose Switching Valve #1, pressing **ENTER** will bring up the **`RUN TIME EVENT VALVE #1 SWITCHING`** menu.

NOTE If you wish to set a programmed external event to be the default condition for an external device, refer to the *Programming External Event Default Conditions* operating sequence on page 457.

5. Fill the parameter fields by using the numeric keypad or the **ON/YES** and **OFF/NO** keys. Parameters will differ among submenus, but each will require a run time in addition to its other settings.

6. Use the numeric keypad to enter an amount of time after the run starts for the event to take place. The run start time is 00.00. For example, for three minutes into the run, type `3` or `3.00`. Press **ENTER** to record the time in memory.

NOTE Time units for run time events are displayed in hundredths of a minute, not minutes and seconds. For example, to program an event to occur 3 minutes and 30 seconds into a run, you would enter 3.5 rather than 3.30.

7. Press **CLEAR** three times to return to the **`RUN TIME EVENTS`** main menu.

OPERATING SEQUENCE

Programming External Event Default Conditions

Before you can perform this sequence, you must have programmed the external device event as described in the *Creating a Run Time Event* operating sequence on page 455.

1. Press **RUN TABLE,** scroll to `Ext. event defaults` and press **ENTER**.

2. Scroll to the external event you to set as the default condition:

   - Press **ON** to set the external event device default condition to `On`.

   - Press **OFF** to set the external event device default condition to `Off`.

The external device will return to the condition specified by the external event you have programmed to be the default whenever the GC is in **Standby** mode.

OPERATING SEQUENCE

Editing a Run Time Event

You can change the time a run time event occurs. However, if you want to change the type of event that occurs, you must delete the current event and add a new one.

For example, if you want the right FID detector to turn on at 1:00 A.M. instead of the left NPD, delete the event `1.00 LNPD On` using the *Deleting a Run Time*

Event operating sequence on page 458. Using the *Creating a Run Time Event* operating sequence on page 455, add a new event that reads `1.00 RFID On`.

To edit the time of a run event, use the following sequence:

1. Press **RUN TABLE** and scroll to the item you want to edit.
2. Press **ENTER** or **MODE/TYPE** to display a submenu. Repeat Steps 1 and 2 until you reach the final submenu for the specific event, such as the **`RUN TIME EVENT EXTERNAL EVENT #2`** submenu.
3. Using the numeric keypad, enter a new time for the event. Press **ENTER**. The **`RUN TIME EVENT`** menu now displays the item at its new time.

OPERATING SEQUENCE

Deleting a Run Time Event

Use the following sequence to delete a run time event from the **`RUN TIME EVENT`** menu.

1. Press **RUN TABLE** and scroll through the menu to the item you want to delete.
2. Press **CLEAR**.
3. A message appears on the display:

   `You are about to delete the above entry. Delete it? Y/N`

   Press **YES** to delete or **NO** to keep the event.

Run Log

The run log keeps track of any errors or deviations during the run. This information can be used to meet good laboratory practice (GLP) standards.

For example, if you interrupt the run for any reason, the run log will record the time the run stopped and an interpretation of the event.

When the run log contains entries, the **Run Log Status** LED is lit. To see the journal of events, press **RUN LOG**. The Run Log is cleared and reset at the beginning of the next run.

27

Manual Functions

This chapter describes how to control signal and valve events manually.

Chapter at a Glance...

Operating Sequence

Controlling Output Signals

The TRACE GC provides output signals in two ways:

- digital data for a computerized data system
- 0–1 V and 0–10 V outputs for analog systems such as integrators

Each installed detector has a corresponding output signal; the left detector transmits the left signal.

To see a signal's current output, press either **RIGHT SIGNAL** or **LEFT SIGNAL**. The **SIGNAL** menu appears. Use the editable items to make the output more meaningful or measurable by:

- shifting (offset)
- amplifying to focus on certain peaks (range or gain)
- filtering electronic noise or drift (analog filter)
- forcing output values to start at zero (autozero)

Using these features can increase the accuracy of your analyses. Most can be set from the **SIGNAL** menu.

You may set these options at any time during a run. The changes you make in this menu during a run will override the run table's programmed instructions that have already occurred. However, subsequent run table instructions will override the earlier manual adjustments.

Table 27-1 describes each item of the **SIGNAL** menu. The menu will vary, depending on the detectors installed.

Table 27-1. Signal Menu

Menu	Range/Options	Comments
RIGHT SIGNAL (PID)		This line is the menu title bar.
Output	Not editable 0–1,100,000 unitless	This parameter displays a 20-bit digital output signal corrected by any items chosen from this menu.
Offset	On/Off, 0–65535	This parameter shifts the output signal to bring baseline within range.
Auto zero?	Yes/No	This parameter automatically adjusts the offset to zero (a digital signal of 1000).
Range=10^(0...3)[1]	0–2 FPD, 0–3 for all other detectors	This parameter attenuates the signal by powers of 10. Lower numbers are more sensitive.
Analog filter[1]	On/Off	This parameter reduces fast, spurious noise.
Baseline compensation	On/Off	This parameter allows baseline compensation function

1. Not displayed for TCD, PDD or ECD.

When To Use Signal Correction

If the chromatogram's baseline is too high…	Adjust the `Offset`.
If you want to automatically adjust the offset…	Use the `Autozero` feature.
If the peaks are saturating the detector…	Set the `Range` higher.
If the signal is too low to give a meaningful reading with an ionization detector...	Set the `Range` lower.
If you're seeing significant high frequency noise…	Turn on the `Analog filter`.

Controlling Valves

You can manually open or close valves before or during a run, overriding instructions from the run table. You can affect the inlet valves and up to eight external valves.

NOTE Each external valve uses one external event. You can have up to eight external events.

Types of Valves

Possible valve types for the TRACE GC and external devices are:

- septum purge
- split
- secondary cooling
- solvent vapor exit
- gas sampling
- switching
- stream select (multiposition)
- solvent
- Backflush

Most of these can be opened or closed using the **ON/YES** and **OFF/NO** keys from the **VALVES** menu. The exceptions are:

- gas sampling, which reads `Load` (press **OFF/NO**) or `Inject` (press **ON/YES**).
- `Stream select` (multiposition), which requires the port position of the valve.

Table 27-2 shows a sample **VALVES** menu and submenus.

Table 27-2. Valves Menu and Submenu

Menu	Submenu	Comments for Menu
VALVES		This line is the menu title bar.
Inlet valves	INLET VALVES R septum purge R split valve L SVE valve L sec cool valve	This parameter controls the valves for S/SL and PTV inlets only.
#1 Switching Switch valve default	SWITCHING VALVE	This valve switching parameter may be set to `On` or `Off`.
#2 Gas sample	SAMPLING VALVE	For the gas sampling valve parameter, the range is Inj=On, Load=Off
#3 Stream select		This parameter controls a multiposition valve

OPERATING SEQUENCE

Setting the Valve Position

Use the following sequence to manually set valve positions.

1. Press **VALVE** to open the **VALVES** menu.
2. Select either the inlet valves or one of the auxiliary valves.
   - For inlet valves, press **ENTER** or **MODE/TYPE** to move to the submenu. Select the appropriate position for the valve and press **ENTER**.

NOTE Inlet valves appear on the menu only if an S/SL or PTV inlet has been installed.

   - If the external valve is a multiposition valve, press **ENTER** or **MODE/TYPE** to move to the submenu. Enter the proper position number and press **ENTER**.
   - For all other kinds of external valves, select the appropriate position (on or off) for the valve and press **ENTER**.

The appropriate action takes place immediately, overriding any programming.

SECTION VIII

Methods and Sequences

This section contains information on programming analytical methods and using them in autosampler injection sequences.

Chapter 28, *Using Analytical Methods*, describes how to set up analytical methods that run automatically when specified.

Chapter 29, *AS Autosampler Sequences*, contains the instructions to programming a sample sequence with the TRACE GC keypad when an AS 2000 autosampler is used and how to set up ranges of samples to run automatically.

Chapter 30, *HS Autosampler Sequences*, contains the instructions to programming a sample sequence with the TRACE GC keypad when an HS 2000 autosampler is used and how to set up ranges of samples to run automatically.

28

Using Analytical Methods

This chapter describes how to set up analytical methods that run automatically when specified.

Chapter at a Glance...

Operating Sequence

Introduction

A *method* controls the function of the gas chromatograph during analytical runs. You may specify parameters for any zone and device (including temperature ramps in the oven menu), as well as run table timed events and autosampler parameters.
Up to ten methods may be programmed and stored in the TRACE GC in addition to the default method.

When an autosampler is used, you may associate different methods to run the analyses of group of samples connected to each other programming a sample *sequence*.

A sample *sequence* is basically a table where different batches of sample vials, accommodated in the autosampler sample tray, are linked together with different methods. Each step of the sequence requires the identification of each batch setting and the method to be used to analyze it.

NOTE If an AS 2000 or HS 2000 autosampler is used, see also Chapter 29, *AS Autosampler Sequences* or Chapter 30, *HS Autosampler Sequences*.

Method Parameters

You may specify many parameters in a method, such as:

- initial oven temperature
- up to seven temperature ramps
- post run oven temperature
- length of time to hold post run temperature
- initial and final carrier gas pressure
- detector types and parameters
- inlet types
- timed events in the run table
- autosampler parameters

When you press the **METHOD** key, the list of stored methods appears.

```
    STORED METHODS

Default  00/00/00

1: 09:30 03/05/9800<

2: 13:13 03/08/9800

3: 15:43 04/10/9800

4: 00:00 00/00/0000

5: 00:00 00/00/0000

6: 00:00 00/00/0000

7: 00:00 00/00/0000

8: 00:00 00/00/0000

9: 00:00 00/00/0000

10: 00:00 00/00/0000
```

Figure 28-1. Stored Methods Menu

The methods are identified by a numeral. The menu shows the time and date they were created or modified. A row of zeros indicates that no method has been stored for that number.

You can store ten methods in the TRACE GC. A default method is programmed at the factory. If you are using a data system, you may store as many methods as your hard drive permits.

OPERATING SEQUENCE

Creating or Editing a Method

You can create a new method or edit a stored method during a run.
Press **EDIT/ACTIVE** to put the TRACE GC into the editing mode. Your edits do not affect the current run.

To create a method, press the **METHOD** key. Select a method number that shows zeros. Press **ENTER**, then select **STORE** from the menu shown in Figure 28-2.

```
      METHOD 1

Load            <

Store
```

Figure 28-2. Method Menu

To edit a method, select a method number that shows a time and date and press **ENTER**. When editing is done, press **STORE** on the TRACE GC keypad.

NOTE You can create or edit a method during a run by pressing **EDIT/ACTIVE**. The **Non-Active** LED will light. The parameters that appear are those last edited, not necessarily those currently running. (You may select a method from the stored list at this time.) When you have finished resetting the parameters and have stored them, press **EDIT/ACTIVE** again to return to the active mode. Your editing does not affect the current run.

The **OVEN** menu appears after you choose a method to edit or create. For more information on the **OVEN** menu, refer to Chapter 14, *The Column Oven*.

Initial Conditions

You need to set the initial oven temperature and the length of time the oven will remain at that temperature after the run begins.

1. In the **OVEN** menu, select `Temp`. Use the numeric keypad to type the temperature for the beginning of the run and press **ENTER**. The number on the right (the setpoint) will change to reflect your edit; the number on the left

shows the actual temperature of the oven. It will begin to change to meet your specifications.

2. Scroll to `Initial time`. Type the length of time in minutes that the oven should remain at the initial temperature after the run starts.

NOTE During a run, the **Initial Temp** LED will light when the TRACE GC receives the start signal and will remain lit during the initial time. In the example in Figure 28-3, the **Initial Temp** LED will stay on for two minutes.

```
            OVEN                ↓
Temp                40 40       <
Initial time        2.00
Ramp 1              7.0
Final temp 1        250
Final time 1        10.0
Ramp 2              Off
Post run temp       300
Post run time       9.50
L Post pres         70
R Post pres         70
```

Figure 28-3. Sample Oven Menu

Ramps

You can specify up to seven temperature ramps in a method. After you have specified one ramp, the display presents options for the next ramp. Use the following sequence to specify ramp settings.

1. Select `Ramp 1` and press **ON** or enter the rate at which the temperature should rise. In the example in Figure 28-3, the temperature starts to rise two minutes

after the run begins. When you turn on `Ramp 1`, two more menu items appear: `Final temp 1` and `Final time 1`.

2. Select `Final temp 1`. With the numeric keypad, type the temperature that the ramp should reach and press **ENTER**.

3. Select `Final time 1` and type the time the oven will hold the final temperature. Press **ENTER**.

As soon as the `Ramp 1` parameters have been filled, a menu item for `Ramp 2` appears. If you want to program more temperature ramps, repeat Steps 1– 3 for each ramp.

NOTE During a run, the **Ramp** LED will light during the first temperature rise and remain lit until the TRACE GC reaches the last ramp's final time. The **Final Temp/Post Run** LED will light when the last final time starts. For the example in Figure 28-3, the **Final Temp/Post Run** LED will light when the GC begins the 10-minute hold time for the final temperature of 250°.

Postrun Conditions

You can specify conditions for after the run. You can specify:

- an oven temperature
- how long to maintain postrun conditions
- the pressure to hold for the carrier gas

The **`OVEN`** menu settings in Figure 28-4 would be appropriate to bake out the column after a run. In the example, the GC will hold the post run temperature for 9.5 minutes, the `Post run time`, after the run is over.

NOTE During a run, the **Final Temp/Post Run** LED will blink during post run conditions.

```
          OVEN

Post run temp   300

Post run time   9.5

L post pres     70
```

Figure 28-4. The Post Run Conditions

Other Conditions

If you want to specify other parameters, such as detector or inlet types, carrier gas pressures, autosampler parameters, or run table timed events, press the appropriate key and make changes to the menus.

For more information about detector settings, refer to Section V, *Detectors*.

For more information about injectors, refer to Section III, *Injectors*.

For more information about carrier gas, refer to Chapter 4, *Digital Gas Control*.

For more information about autosamplers, refer to Chapter 24, *AS 2000 Autosampler* or Chapter 25, *HS 2000 Autosampler*.

For more information about the run table, refer to Chapter 26, *Automated Functions*.

OPERATING SEQUENCE

Storing a Method

When you have specified all the conditions necessary for your analysis, press **STORE**, `Method`, and a number from 1 through 10. After you have completed this step, the **`METHOD`** menu will display the time and date you created the method and the number you assigned it.

NOTE If you are using a data system, you are not limited to 10 methods.

Another way to store the method is to scroll to a number in the **METHOD** menu and press **ENTER**.

If you were editing during a run, press **EDIT/ACTIVE** to return to the active mode.

29

AS Autosampler Sequences

This chapter contains the instructions to programming a sample sequence with the TRACE GC keypad when an AS 2000 autosampler is used and how to set up ranges of samples to run automatically.

Chapter at a Glance...

Operating Sequence

Sequence Programming

This paragraph contains the instructions to programming a sample sequence with the TRACE GC keypad.
A *sequence* is a set of instructions for a range of samples. You can save up to five sequences in the TRACE GC. You may specify the following parameters in a sequence:

- range of samples
- number of draws per sample
- analytical method to be used
- priority samples
- sequence repetition

- post sequence method loads

Sequence Menu Overview

To open sequence menu press **SEQ**. Figure 29-1, page 479, shows an example of a completed sequence menu already stored. Refer to *Stored Sequence Menu* on page 480 for details.

Note that each sequence has three areas of dialog:

- Subsequence, for the routine analysis of groups of samples in the tray using different methods
- Post sequence, for repeating all or part of the sequence and loading a new method
- Priority, for interrupting a running sequence with priority sample

The sequence menu changes depending on your selections. After each subsequence you enter, the option for a new subsequence appears.

In the example of Figure 29-1 the first subsequence directs that the first 45 samples will be analyzed by method #2 and that each sample is injected twice. The second subsequence directs that the second half of the samples is injected only once and analyzed by method #6.

After all samples have been analyzed, the post sequencing instructions call for the samples to be rerun once. When the sequence is complete, the TRACE GC will load method #5.

```
      SEQUENCE (Subseq 1)          ↓

-----------PRIORITY----------

Priority Method/   Off

--------Subseq 1--------

Method #           2

Injections/vial    2

Samples            1-45

--------Subseq 2--------

Method #           6

Injections/vial    1

Samples            45-90

--------Post Sequence--------

Repeat sequence    1

Method #           5
```

Figure 29-1. Sequence Menu

Stored Sequence Menu

To access this menu you press **STORE** then **SEQ** or **STORE**, then select `Sequence` and press **ENTER**.

```
        STORE

Method

Sequence          <
```

The list of stored sequences, like the one in Figure 29-2, appears.

```
   STORED SEQUENCES

1: 09:30 03/05/9800<

2: 13:13 03/08/9800

3: 15:43 04/10/9800

4: 00:00 00/00/0000

5: 00:00 00/00/0000
```

Figure 29-2. Stored Sequences Menu

This menu contains up to five rows, numbered from 1 to 5, corresponding each to a sequence.
The already stored sequences are identified by a series of numbers indicating the time and date they were created or modified. A row of zeros indicates that no sequence has been stored for that number.

CAUTION **To exit `STORED SEQUENCE` menu press any key with the exclusion of CLEAR, ENTER and numerical keys.**

How to Modify a Stored Sequence

NOTE You can also modify a not active sequence during a run.
Before starting, press **EDIT/ACTIVE** to put the TRACE GC into the editing mode. Your edits do not affect the current run.

Select the sequence number of the stored sequence you want to modify then press any key (with the exclusion of **CLEAR**, **ENTER** and numerical keys) to exit **STORED SEQUENCE** menu.

Press **SEQ**, the sequence menu like the one in Figure 29-1 appears.
Modify the sequence following the instructions reported in paragraph *Sequence Set-up* then store as described in paragraph *Storing a Sequence*.

How to Create or Edit a Sequence

NOTE

You can also create or edit a sequence during a run.
Before starting, press **EDIT/ACTIVE** to put the TRACE GC into the editing mode. Your edits do not affect the current run.

Select a sequence number with no data then press any key (with the exclusion of **CLEAR**, **ENTER** and numerical keys) to exit **STORED SEQUENCE** menu.

Press **SEQ**, the sequence menu like the one in Figure 29-3 appears.

```
SEQUENCE #1 (PRIORITY) Ø

Priority            Off  <

Subseq #1           Off

Method #            1

Injections/vial     1

Samples             1-1

Subseq #2

Method #            Off

Postsequence        Off

Repeat seq          Off

Method #            Off
```

Figure 29-3. Empty Sequence Menu

The **SEQUENCE** menu lists the Priority feature first to allow easy and rapid introduction of priority samples during a running sequence.

The title bar indicates the section edited. In the example in Figure 29-3, the cursor points to the Priority section. Consequently, the title bar reads **SEQUENCE #1 (PRIORITY)**.

Create the sequence following the instructions reported in paragraph *Sequence Set-up* then store as described in paragraph *Storing a Sequence*.

Sequence Set-up

The following sections describe how to set up each part of the sequence.

How to Set Subsequences

You can break a sequence into subsequences to specify different analytical methods and handling for various ranges of samples in the tray.

You can specify up to five subsequences in the TRACE GC.

Table 29-1. Subsequence Options in the Sequence Menu

Menu	Range	Comments
-----Subseq 1----		This label appears after the Priority section of the **SEQUENCE** menu.
Method #	1–10	Enter the analytical method you want to use. for information about programming methods.
Injections/vial	1–999	Enter the number of times each sample should be run consecutively.
Samples	1–90	Enter a range of sample numbers.
Subseq 2		Press **ON** to set up another subsequence.

When you have entered the required data for a subsequence, a menu for a new subsequence appears. If you do not want to add more subsequences, leave the next subsequence set to Off.

How to Set Post Sequence Events

When you reach the post sequence part of the menu, you have the option of repeating the sequence either a specified number of times or in an infinite loop. You can also specify that a new method be loaded.

Table 29-2. Post Sequence Section of Sequence Menu

Menu	Range	Comments
`Repeat seq  Off  <`	On/Off, 0–999, ∞	Enter **ON** or a range of samples to repeat the previous sequence. Choosing **ON** reruns the same range as specified in the sequence.
`Method #  3`	1–10	Choose a method number to load after the samples have finished all specified repetitions.

How To Set Priority

With the `Priority` feature, you can interrupt a running sequence to run a priority sample. You can also specify certain samples to be run first. You can either put samples in the priority section of the tray or have the autosampler skip to another part of the tray. To designate priority samples, scroll to `Priority` and press **ENTER** or **ON**. The priority options appear on the display.

Table 29-3. Priority Section of the Sequence Menu

Menu	Range	Comments
`-------PRIORITY-----`		This label appears just under the title bar.
`Method #`	1–10	Refer to Chapter 28, *Using Analytical Methods*, , for information about programming methods.
`Priority method`	1–10, Off	Enter the number of the analytical method you want to use on these samples.

Table 29-3. Priority Section of the Sequence Menu

Menu	Range	Comments
`Position`	P1, P2, P1–2, 1–90	Press **ENTER** or **MODE/TYPE** to display the **`PRIORITY POSITION`** submenu.

You can designate the location of the priority samples on the **`PRIORITY POSITION`** menu.

Table 29-4. Priority Position Submenu

Menu	Comments
`PRIORITY POSITION`	This line is the menu title bar.
`P1`	Choose this option to specify the vial on the outer edge of the priority holding area.
`P2`	Choose this option to specify the vial on the inside of the priority holding area.
`P1-2`	Choose this option to run both vials in the priority holding area.
`Samp vials`	Specify a vial or range of vials from the tray.

After you enter the priority sample data, you must interrupt the currently-running sequence from the **`SEQUENCE CONTROL`** menu to run the sample. Refer to *Interrupting a Sequence With a Priority Sample* on page 487 for instructions on running priority samples.

Storing a Sequence

To store a sequence after you have specified its parameters, press **STORE**, select `Sequence`, and enter the number you've assigned to the sequence (an integer from 1 to 5) then press **ENTER**.

If you were editing during a run, press **EDIT/ACTIVE** to return to the active mode.

Sequence Control

Use the **SEQ CONTROL** key for the following functions:

- to start a sequence
- to stop a sequence
- to pause a sequence
- to resume a sequence
- to run a priority sequence
- to check the status of a sequence

The **SEQUENCE CONTROL** menu change, depending on the current status of a sequence. Figure 29-4 illustrates several forms of the **SEQUENCE CONTROL** menu.

```
SEQUENCE CONTROL
 Status:  Stopped
 Start Sequence
```

```
SEQUENCE CONTROL
 Status:  Running
 Pause sequence
 Stop sequence
 Subseq 1 Vial# 7
 Injection 1 of 3
```

```
SEQUENCE CONTROL
 Status: Aborted
 Resume sequence
 Stop sequence
```

```
SEQUENCE CONTROL
 Status: Paused
 Resume sequence
 Stop sequence
```

Figure 29-4. Sequence Control Menus

OPERATING SEQUENCE

Running a Sequence with the AS 2000

To start a sequence proceed as follows.

Loading a Pre-loaded Sequence

1. When the **Standby/Prep Run** LED is lit, press **LOAD**.
2. Select `Sequence` and press **ENTER**. The **`SEQUENCE`** menu appears.
3. Select the sequence you want to run. Press **ENTER**. The sequence is now loaded.

NOTE If you have not pre-loaded a sequence, refer to *Sequence Programming* on page 477. If you press **SEQ CONTROL** and select `Start sequence` without having created or loaded a sequence, the TRACE GC will use the default specifications in Figure 29-3 on page 481.

Starting a Sequence

1. Press **SEQ CONTROL**. The **`SEQUENCE CONTROL`** menu should appear like the first example in Figure 29-4. If another sequence is running, aborted, or paused, you have the option of stopping it.
2. Select `Start Sequence` and press **ENTER**.

   Depending on the settings in the method you chose, the TRACE GC may return to a Not Ready state. The **Not Ready** LED will light to indicate this condition.
3. If you turned on the `Auto Prep Run` feature in the **`CONFIGURE OVEN`** menu, skip to the next step.

   If the TRACE GC is not configured to automatically do the prep run, press the **PREP RUN** key.

4. If you configured the TRACE GC to start when it receives a signal from an external device or programmed an automatic start in the method's run table, you need do nothing further.

   If you have not programmed the TRACE GC to start automatically, press the **START** key after the **Ready to Inject** LED lights.

Interrupting a Sequence With a Priority Sample

To interrupt a running sequence for the analysis of priority samples proceed as follows.

1. Press **SEQ**. The sequence table of the currently running sequence is displayed.
2. Scroll to `Priority meth` and press **ON**. The `Priority` section of the **`SEQUENCE`** menu is displayed.
3. Scroll to `Priority method` and enter the number of the method to be used for the priority samples.
4. Scroll to `Position` and enter the location of the priority vials in the autosampler tray.

When you are ready to interrupt the currently-running sequence and run the priority samples, do the following:

1. Press **SEQ CONTROL**. If you have entered a priority sample in the **`SEQUENCE`** menu, the **`SEQUENCE CONTROL`** menu displays an additional line: `Run priority sequence`.
2. Scroll to `Run priority seq` and press **ENTER**. The `Run priority seq` menu item disappears.

The GC will complete its current analysis. The next sample run will be the priority sample or samples. After the priority samples have been analyzed, the GC will automatically resume the interrupted sequence where it left off.

NOTE Don't forget to adjust your data acquisition system to account for any extra priority samples you have inserted during a sequence.

30

HS Autosampler Sequences

This chapter contains the instructions to programming a sample sequence with the TRACE GC keypad when an HS 2000 autosampler is used and how to set up ranges of samples to run automatically.

Chapter at a Glance...

Operating Sequence

Sequence Programming

This paragraph contains the instructions to programming a sample sequence with the TRACE GC keypad.
A *sequence* is a set of instructions for a range of samples. You can save up to five sequences in the TRACE GC. You may specify the following parameters in a sequence:

- range of samples
- analytical method to be used
- sequence repetition
- post sequence method loads

Sequence Menu Overview

To open sequence menu press **SEQ**. Figure 30-1 shows an example of a completed sequence menu.

Note that each sequence has two areas of dialog:

- Subsequence, for the routine analysis of groups of samples in the tray using different methods
- Post sequence, for repeating all or part of the sequence and loading a new method

The sequence menu changes depending on your selections. After each subsequence you enter, the option for a new subsequence appears.

In the example of Figure 30-1the first subsequence directs that the first 16 samples will be analyzed by method #2 and that each sample is injected twice. The second subsequence directs that the second half of the samples is injected only once and analyzed by method #6.

After all samples have been analyzed, the post sequencing instructions call for the samples to be rerun once. When the sequence is complete, the TRACE GC will load method #5.

```
      SEQUENCE (Subseq 1)        ↓

--------Subseq 1--------

Method #           2

Samples            1-16

--------Subseq 2--------

Method #           6

Samples            17-32

--------Post Sequence--------

Repeat sequence    1

Method #           5
```

Figure 30-1. Sequence Menu

Stored Sequence Menu

To access this menu you press **STORE** then **SEQ** or **STORE**, then select `Sequence` and press **ENTER**.

```
          STORE

Method

Sequence           <
```

The list of stored sequences, like the one in Figure 30-2, appears.

```
   STORED SEQUENCES

1: 09:30 03/05/9800<

2: 13:13 03/08/9800

3: 15:43 04/10/9800

4: 00:00 00/00/0000

5: 00:00 00/00/0000
```

Figure 30-2. Stored Sequences Menu

This menu contains up to five rows, numbered from 1 to 5, corresponding each to a sequence.
The already stored sequences are identified by a series of numbers indicating the time and date they were created or modified. A row of zeros indicates that no sequence has been stored for that number.

CAUTION **To exit `STORED SEQUENCE` menu press any key with the exclusion of CLEAR, ENTER and numerical keys.**

How to Modify a Stored Sequence

NOTE You can also modify a not active sequence during a run.
Before starting, press **EDIT/ACTIVE** to put the TRACE GC into the editing mode. Your edits do not affect the current run.

Select the sequence number of the stored sequence you want to modify then press any key (with the exclusion of **CLEAR**, **ENTER** and numerical keys) to exit **`STORED SEQUENCE`** menu.

Press **SEQ**, the sequence menu like the one in Figure 30-1 appears.
Modify the sequence following the instructions reported in paragraph *Sequence Set-up* then store as described in paragraph *Storing a Sequence*.

How to Create or Edit a Sequence

NOTE You can also create or edit a sequence during a run.
Before starting, press **EDIT/ACTIVE** to put the TRACE GC into the editing mode. Your edits do not affect the current run.

Select a sequence number with no data then press any key (with the exclusion of **CLEAR**, **ENTER** and numerical keys) to exit **STORED SEQUENCE** menu.

Press **SEQ**, the sequence menu like the one in Figure 30-3 appears.

```
      SEQUENCE #1

Subseq #1          Off

Method #           1

Samples            1-1

Subseq #2

Method #           Off

Postsequence       Off

Repeat seq         Off

Method #           Off
```

Figure 30-3. Empty Sequence Menu

Create the sequence following the instructions reported in paragraph *Sequence Set-up* then store as described in paragraph *Storing a Sequence*.

Sequence Set-up

The following sections describe how to set up each part of the sequence.

How to Set Subsequences

You can break a sequence into subsequences to specify different analytical methods and handling for various ranges of samples in the tray.

You can specify up to five subsequences in the TRACE GC.

Table 30-1. Subsequence Options in the Sequence Menu

Menu	Range	Comments
`-----Subseq 1----`		This is the title of the **`SEQUENCE`** menu.
`Method #`	1–10	Enter the analytical method you want to use. Refer to Chapter 28, *Using Analytical Methods*, for information about programming methods.
`Samples`	1–90	Enter a range of sample numbers.
`Subseq 2`		Press **ON** to set up another subsequence.

When you have entered the required data for a subsequence, a menu for a new subsequence appears. If you do not want to add more subsequences, leave the next subsequence set to `Off`.

How to Set Post Sequence Events

When you reach the post sequence part of the menu, you have the option of repeating the sequence either a specified number of times or in an infinite loop. You can also specify that a new method be loaded.

Table 30-2. Post Sequence Section of Sequence Menu

Menu	Range	Comments
`Repeat seq  Off  <`	On/Off, 0–999, ∞	Enter **ON** or a range of samples to repeat the previous sequence. Choosing **ON** reruns the same range as specified in the sequence.
`Method #  3`	1–10	Choose a method number to load after the samples have finished all specified repetitions.

Storing a Sequence

To store a sequence after you have specified its parameters, press **STORE**, select `Sequence`, and enter the number you've assigned to the sequence (an integer from 1 to 5) then press **ENTER**.

If you were editing during a run, press **EDIT/ACTIVE** to return to the active mode.

Sequence Control

Use the **SEQ CONTROL** key for the following functions:

- to start a sequence
- to stop a sequence
- to pause a sequence
- to resume a sequence
- to check the status of a sequence

The **`SEQUENCE CONTROL`** menu change, depending on the current status of a sequence. Figure 30-4 illustrates several forms of the **`SEQUENCE CONTROL`** menu.

```
SEQUENCE CONTROL
Status:  Stopped
Start Sequence
```

```
SEQUENCE CONTROL
Status:  Running
Pause sequence
Stop sequence
Subseq 1 Vial# 7
Injection 1 of 3
```

```
SEQUENCE CONTROL
Status: Aborted
Resume sequence
Stop sequence
```

```
SEQUENCE CONTROL
Status: Paused
Resume sequence
Stop sequence
```

Figure 30-4. Sequence Control Menus

OPERATING SEQUENCE

Running a Sequence with the HS 2000

To start a sequence proceed as follows.

Loading a Stored Sequence

1. When the **Standby/Prep Run** LED is lit, press **LOAD**.
2. Select `Sequence` and press **ENTER**. The **`SEQUENCE`** menu appears.
3. Select the sequence you want to run. Press **ENTER**. The sequence is now loaded.

NOTE If you have not stored a sequence, refer to *Sequence Programming* on page 489. If you press **SEQ CONTROL** and select `Start sequence` without having created or loaded a sequence, the TRACE GC will use the default specifications in Figure 30-3 on page 492.

Starting a Sequence

1. Press **SEQ CONTROL**. The **`SEQUENCE CONTROL`** menu should appear like the first example in Figure 30-4. If another sequence is running, aborted, or paused, you have the option of stopping it.
2. Select `Start Sequence` and press **ENTER**.

   Depending on the settings in the method you chose, the TRACE GC may return to a Not Ready state. The **Not Ready** LED will light to indicate this condition.
3. If you turned on the `Auto Prep Run` feature in the **`CONFIGURE OVEN`** menu, skip to the next step.

   If the TRACE GC is not configured to automatically do the prep run, press the **PREP RUN** key.

4. If you configured the TRACE GC to start when it receives a signal from an external device or programmed an automatic start in the method's run table, you need do nothing further.

   If you have not programmed the TRACE GC to start automatically, press the **START** key after the **Ready to Inject** LED lights.

A

Ionization Potential of Selected Molecules

Use the information in this appendix to determine the PID lamp intensity necessary to ionize certain molecules from the following groups:

- Simple Molecules
- Paraffins and Cycloparaffins
- Alkyl Halides
- Aliphatic Alcohol, Ether, Thiol, and Sulfides
- Aliphatic Aldehydes and Ketones
- Aliphatic Acids and Esters
- Aliphatic Amines and Amides
- Other Nitrogen Containing Molecules
- Heterocyclic Molecules
- Olefins, Cyclo-olefins, and Acetylenes
- Olefin Derivatives
- Aromatic Compounds
- Miscellaneous Molecules

Simple Molecules

Molecule	IP (eV)	Molecule	IP (eV)	Molecule	IP (eV)	Molecule	IP (eV)
H_2	15.46	HBr	11.62	NO	9.25	HF	15.77
N_2	15.58	HI	10.38	H_2O	12.59	H_2S	10.46
O_2	12.07	SO_2	12.34	HCN	13.91	HCl	12.74
F_2	15.7	CO	14.01	NH_3	10.15	N_2O	12.90
Cl_2	11.48	CO_2	13.79	PH_3	9.98		
Br_2	10.55	COS	11.18	PCl_3	9.91		
I_2	9.28	CS_2	10.08	AsH_3	10.03		

Paraffins and Cycloparaffins

Molecule	IP (eV)	Molecule	IP (eV)	Molecule	IP (eV)	Molecule	IP (eV)
methane	12.98	n-heptane	10.08	propane	11.07	n-hexane	10.18
ethane	11.65	2,2,4 trimethylpentane	9.86	n-butane	10.63	n-pentane	10.35
cyclopropane	10.06	cyclopentane	10.53	cyclohexane	9.88		

Alkyl Halides

Molecule	IP (eV)	Molecule	IP (eV)
methyl chloride	11.28	dichloromethane	11.35
trichloromethane	11.42	tetrachloromethane	11.47
ethyl chloride	10.98	1,2-dichloroethane	11.12
1-chloropropane	10.82	1-chlorobutane	10.67
methyl bromide	10.53	dibromomethane	10.49
tribromomethane	10.51	CH_2BrCl	10.77
$CHBr_2Cl$	10.59	ethyl bromide	10.29
1,1-dibromoethane	10.19	1-bromopropane	10.18
1-bromobutane	10.13	2-bromobutane	9.98
methyl iodide	9.54	ethyl iodide	9.33
1-iodopropane	9.26	1-iodobutane	9.21
1-iodopentane	9.19	$CFCl_3$ (Freon 11)	11.77
CF_2Cl_2 (Freon 12)	12.31	CF_3 Cl (Freon 13)	12.91
$CHClF_2$ (Freon 22)	12.45	CF_3CCl_3 (Freon 113)	11.78

Aliphatic Alcohol, Ether, Thiol, and Sulfides

Molecule	IP (eV)	Molecule	IP (eV)
methyl alcohol	10.85	ethyl alcohol	10.48
n-propyl alcohol	10.20	i-propyl alcohol	10.16
n-butyl alcohol	10.04	dimethyl ether	10.00
diethyl ether	9.53	methanethiol	9.44
ethanethiol	9.28	1-propanethiol	9.19
1-butanethiol	9.14	dimethyl sulfide	8.68
ethyl methyl sulfide	8.55	diethyl sulfide	8.43
di-n-propyl sulphide	8.30	methyl disulphide	8.46
ethyl disulphide	8.27		

Aliphatic Aldehydes and Ketones

Molecule	IP (eV)
formaldehyde	10.87
propionaldehyde	9.98
acrolein	10.10
acetone	9.69
methyl n-propyl ketone	9.39
methyl n-butyl ketone	9.34
cyclopentanone	9.26
2,3-butanedione	9.23
benzaldehyde	9.53

Molecule	IP (eV)
acetaldehyde	10.21
n-butyraldehyde	9.86
crotonaldehyde	9.73
methyl ethyl ketone	9.53
diethyl ketone	9.32
2-heptanone	9.33
cyclohexanone	9.14
2,4-pentanedione	8.87

Aliphatic Acids and Esters

Molecule	IP (eV)
formic acid	11.05
propionic acid	10.24
ethyl acetate	10.11
methyl propionate	10.15

Molecule	IP (eV)
acetic acid	10.37
n-butyric acid	10.16
n-butyl acetate	10.01
ethyl propionate	10.00

Aliphatic Amines and Amides

Molecule	IP (eV)
methyl amine	8.97
n-propyl amine	8.78
dimethyl amine	8.24
di-n-propyl amine	7.84
trimethyl amine	7.82
formamide	10.25
N,N-dimethyl formamide	9.12
tri-n-propyl amine	7.23

Molecule	IP (eV)
ethyl amine	8.86
n-butyl amine	8.71
diethyl amine	8.01
di-n butyl amine	7.69
triethyl amine	7.50
acetamide	9.77
N,N-diethyl formamide	8.89

Other Nitrogen Containing Molecules

Molecule	IP (eV)
nitromethane	11.08
1-nitropropane	10.81
propionitrile	11.84
ethyl nitrate	11.22
methyl isothiocyanate	9.25

Molecule	IP (eV)
nitroethane	10.88
acetonitrile	12.22
acrylonitrile	10.91
ethyl thiocyanate	9.89

Heterocyclic Molecules

Molecule	IP (eV)
furan	8.89
thiophene	8.86
pyridine	9.32
2,3-lutidine	8.85

Molecule	IP (eV)
tetrahydrofuran	9.54
pyrrole	8.20
2-picoline	9.02

Olefins, Cyclo-olefins, and Acetylenes

Molecule	IP (eV)
ethylene	10.51
1-butene	9.58
1-pentene	9.50
1,3-butadiene	9.07
cyclopentene	9.01
acetylene	11.41

Molecule	IP (eV)
propylene	9.73
trans-2-butene	9.13
1-hexene	9.46
1-butyne	10.18
cyclohexene	8.94
propyne	10.36

Olefin Derivatives

Molecule	IP (eV)
vinyl chloride	9.99
tetrachloroethylene	9.32
3-chloropropene	10.04
crotonaldehyde	9.73
vinyl acetate	9.19

Molecule	IP (eV)
trichloroethylene	9.45
vinyl bromide	9.80
1-bromopropene	9.30
allyl alcohol	9.67

Aromatic Compounds

Molecule	IP (eV)
benzene	9.245
ethyl benzene	8.76
n- butyl benzene	8.69
m-xylene	8.56
styrene	8.47
1-methylnapthalene	7.69
phenanthrene	8.1
biphenyl	8.27
anisole	8.22
benzaldehyde	9.53
phenyl isocyanate	8.77
nitrobenzene	9.92
fluoro-benzene	9.195
bromo-benzene	8.98
benzotrifluoride	9.68

Molecule	IP (eV)
toluene	8.82
n-propyl benzene	8.72
o-xylene	8.56
p-xylene	8.44
naphthalene	8.12
anthracene	7.55
fluorene	8.63
phenol	8.50
phenetole	8.13
acetophenone	9.27
benzonitrile	9.70
aniline	7.70
chloro-benzene	9.07
iodo-benzene	8.73

Miscellaneous Molecules

Molecule	IP (eV)
ethylene oxide	10.56
p-dioxane	9.13
acetyl bromide	10.55
diethyl sulphite	9.68

Molecule	IP (eV)
propylene oxide	10.22
acetyl chloride	11.02
phosgene	11.77

B

Customer Communication

This appendix contains contact information for ThermoFinnigan offices worldwide. This appendix also contains one-page *Reader Survey*. Use this survey to give us feedback on this manual and help us improve the quality of our documentation.

How To Contact Us

ThermoFinnigan provides comprehensive technical assistance worldwide and is dedicated to the quality of our customer relationships and services. Use this list to contact your local ThermoFinnigan office or affiliate.

Europe

AUSTRIA
ThermoQuest Austria wissenschaftliche Geräte GmbH
Wehlistrasse 27 b, A-1200, Wien
Tel: 1 33350340 Fax:: 1 333503426
Also serving **BULGARIA**, **CROATIA**, **CZECH REPUBLIC**, **HUNGARY**, **POLAND**, **RUMANIA SLOVAKIA**, **SLOVENIA**

BELGIUM
Interscience SPRL
Scientific Parc Einstein –Avenue Jean-Etienne Lenoir 2
B-1348 Louvain-la-Neuve
Tel: 010 450025 Fax:010 453080

CIS and formerly USSR Republics
Neolab Moskow Office
1 Y Obidenskiy Per. B. 10 - Office 2 119034 Moscow
Tel: ++ 7 (095) 9264148/70/71
Fax:: ++ 7 (095) 9264514

DENMARK
ThermoFinnigan AB - Sweden
Pyramidbacken 3
SE 14175 Kugens Kurva
Tel: (8) 55646800 Fax: (8) 55646808

FINLAND
Oy G.W. Berg & Co. AB
PO Box 12
Finn 02201 Espoo
Tel: (9) 88664600 Fax: (9) 88664699

GERMANY
ThermoQuest APG Gmbh
Boschring 12, 63329 Egelsbach
Tel: (06103) 4080 Fax: (06103) 408 222

IRELAND
ThermoFinnigan U.K.
19 Trentham Lake South
Imex Technology Park, Trentham
ST4 8JF, Stoke on Trent, STAFF
Tel: (1782) 645136 Fax: (1782) 645121

NETHERLANDS
Interscience B.V.
Tinstraat 16, Postbus 2148, 4800 CC Breda
Tel: (076) 5411800 Fax: (076) 5420088

PORTUGAL
Unicam Sistemas Analiticos, Lda.
Estrada da Rocha, 2-A-Sala C
2799-508 Linda A Velha
Tel: (21) 4153740 Fax: (21) 414 2006

SWEDEN
ThermoFinnigan AB - Sweden
Pyramidbacken 3
SE 14175 Kugens Kurva
Tel: (8) 55646800 Fax: (8) 55646808

FRANCE
ThermoFinnigan France SA
Hightec Sud 12 Avenue des Tropiques – Z.A. de Courtaboeuf
BP 141 - 91944 Les Ulis Cedex
Tel: (01) 6918 8810 Fax:: (01) 6929 9382

GREECE
Rigas Labs
5, Salaminos Str.
546 26 Thessaloniki - Greece
Tel: (031) 550669/540410 Fax: (031) 550073

ITALY
ThermoQuest Italia S.p.A.
Strada Rivoltana
20090 Rodano (Milan)
Tel: (02) 95059226 Fax: (02) 95059256

NORWAY
IT Instrument Teknikk
Skandinavia A/S – PO Box 14
Grins Naeringspark 1 N-1345 Østerås
Tel: (67) 149303 Fax: (67) 149302

SPAIN
ThermoQuest – Thermo Instruments S.A.
Avenida Valdelaparra 27
Edifico Alcor – 2a Planta
28108 Alcobendas – Madrid
Tel: (91) 6574930 Fax: (91) 6574937

SWITZERLAND
Brechbühler AG
Steinviesenstrasse 3, CH 8952 Schlieren
Tel: (01) 732 3131 Fax: (01) 730 6141

TURKEY
Dolunay Teknik Cihazlar Ltd.
Darulaceze Cad. No 43/A
80290 Okmeydani
Istanbul
Tel: (212) 2105435 Fax: (212) 2105434

UNITED KINGDOM
ThermoFinnigan U.K.
19 Trentham Lake South
Imex Technology Park, Trentham
ST4 8JF, Stoke on Trent, STAFF
Tel: (1782) 645136 Fax: (1782) 645121

Africa, Asia and Oceania

AUSTRALIA
ThermoQuest Australia PTY LTD
Unit 14, 38-46 South Street
Rydalmere, NSW 2116
Tel: 02 9898 9000 Fax:: 02 9898 9800

INDIA
Nulab Equipment Co. Pvt. Ltd.
Labhouse Plot No. F-13
Opp. Seepz, Marol M.I.D.C.
Andheri (East) Mumbay 400 093
Tel: (022) 8376701 Fax:: (022) 8368275

JAPAN
ThermoQuest K.K.
Nishi-Shinjuku, Toyokuni Building
2-5-8 Hatsudai, Shibuya-ku, Tokyo 151-0061
Tel: (03) 3372 3001 Fax: (03) 3372 7051

KOREA
InSung Chromotech Co., Ltd.
InSung Bldg 89-111, Shinjung 2-dong
Yangcheon-Ku – Seoul
Tel: (02) 2644 1991 Fax: (02) 2644 1996

NEW ZEALAND
Alphatech Systems Ltd & Co.
P.O. Box 37583 Parnell
Auckland
Tel: (09) 3770392 Fax: (09) 3098514

EGYPT
Scientic Services
20, Shehab Street, El Mohandeseen
Dokki, Cairo
Tel: (2) 3600482 Fax:: (2) 3481424

ISRAEL
Burgal Analytical Instruments & Software Ltd.
4 Wallenberg Raoul Street
Tel Aviv 69719
Tel: (3) 6490823 Fax: (03) 6490826

JORDAN
Hijaz Electronic & Scientific Supplies Est
P.O. Box 925133
Amman 11110
Tel: (6) 5359761 Fax: (6) 5359761

LEBANON
LaboTech Engineering
Ashrafieh, Monot Street, P.O. Box 16
7186 Beirut
Tel: (1) 332707 Fax: (1) 333707

PAKISTAN
Total Technology
1st floor, 4-Singhar Centre, 16 Mc Lagan Road
Lahore 54000
Tel: (42) 7236469/7224459 Fax: (42) 7234689

PEOPLES REPUBLIC OF CHINA
Finnigan Beijing Office
Room 912-916, Ping-an Mansion no 23
Finance Street
Xi Cheng District
Beijing
Tel: (10) 66210852 Fax: (10) 6610851

SINGAPORE
CE Instruments Enterprise Singapore
c/o Sintech Scientific S.E.A. Pte Ltd
No. 196 Pandan Loop #02-18
Pantech Industrial Complex
Singapore 128384
Tel: +65 779 0007 Fax: +65 2346252
Also serving **INDONESIA**, **MALAYSIA**, **THAILAND**, **PHILIPPINES**

SOUTH AFRICA
Premier Technologies
P.O Box 173
Northriding 2162
South Africa
Tel: (011) 4661410 Fax: (011) 4661313

TAIWAN R.O.C.
E Hong Instruments Co, Ltd.
2FL, No.157, Sec 2, Fu Hsing S. Road
Taipei 106
Taiwan R.O.C.
Tel: (02= 2755 2266 Fax: (02) 2707 7693

U.A.E
BDH Middle East
P.O. Box 28637
Dubai
Tel: (4) 2852211 Fax: (4) 2861331

North, Central and South America

CANADA
ThermoQuest Americas
Tel: (732) 981-0390 Fax: (732) 981-0029.

U.S.A
.ThermoQuest Americas
Tel: (732) 981-0390 Fax: (732) 981-002

Reader Survey

Product: TRACE GC
Manual: Operating Manual
Part No.: 317 09170

Please help us improve the quality of our documentation by completing and returning this survey. Circle one number for each of the statements below.

	Strongly Agree	Agree	Neutral	Disagree	Strongly Disagree
The manual is well organized.	1	2	3	4	5
The manual is clearly written.	1	2	3	4	5
The manual contains all the information I need.	1	2	3	4	5
The instructions are easy to follow.	1	2	3	4	5
The instructions are complete.	1	2	3	4	5
The technical information is easy to understand.	1	2	3	4	5
Examples of operation are clear and useful.	1	2	3	4	5
The figures are helpful.	1	2	3	4	5
I was able to install the system using this manual.	1	2	3	4	5

If you would like to make additional comments, please do. (Attach additional sheets if necessary.)

_____

_____

_____

_____

Fax or mail this form to:
ThermoQuest Italia S.p.A.
Strada Rivoltana km 4
20090 Rodano (MI)
ITALY
Fax: 39 02 95059388

Glossary

This section contains an alphabetical list and descriptions of terms used in this guide and the help diskette. It also includes abbreviations, acronyms, metric prefixes, and symbols.

A

A	ampere
ac	alternating current
ADC	analog-to-digital converter

B

b	bit
B	byte (8 b)
baud rate	data transmission speed in events per second

C

ºC	Celsius
CIP	Carriage and Insurance Paid To
cm	centimeter
CPU	central processing unit (of a computer)
CSE	Customer Service Engineer

D

d	depth
DAC	digital-to-analog converter
dc	direct current
DS	data system

E

ECD	Electron Capture Detector
EMC	electromagnetic compatibility
ESD	electrostatic discharge

F

ºF	Fahrenheit
FID	Flame Ionization Detector
FOB	Free on Board
FPD	Flame Photometric Detector
ft	foot

G

g	gram
gain	A measure of the ability of an electronic circuit or device to increase the magnitude of an electronic input parameter.
GC	gas chromatograph
GND	electrical ground

H

h	height
h	hour
harmonic distortion	A high-frequency disturbance that appears as distortion of the fundamental sine wave.
HOT OC	High Oven Temperature Cold On-Column Injector
HV	high voltage

Hz	hertz (cycles per second)

I

ID	inside diameter
IEC	International Electrotechnical Commission
impulse	See *transient*
in	inch
I/O	input/output

K

k	kilo (10^3 or 1024)
K	Kelvin
kg	kilogram
kPa	kilopascal

L

l	length
l	liter
lb	pound
LED	light-emitting diode
LVOCI	Large Volume On-Column Injector

M

m	meter (or milli [10^{-3}])
M	mega (10^6)
µ	micro (10^{-6})
MBq	megabecquerel

mCi	millicurie
meniscus	The curved upper surface of a column of liquid.
min	minute
mL	milliliter
mm	millimeter
m/z	mass-to-charge ratio

N

n	nano (10^{-9})
negative polarity	The inverse of a detector signal polarity.
nm	nanometer
NPD	Nitrogen Phosphorous Detector

O

OCI	On-Column Injector
OD	outside diameter
Ω	ohm

P

p	pico (10^{-12})
Pa	pascal
PCB	printed circuit board
PDD	Pulsed Discharge Detector
PID	Photoionization Detector
PKD	Packed Column Injector
PN	part number

PPKD	Purged Packed Column Injector
psi	pounds per square inch
PTV	Programmable Temperature Vaporizing Injector

R

RAM	random access memory
RF	radio frequency
ROM	read-only memory
RS-232	industry standard for serial communications

S

s	second
S/SL	Split/Splitless Injector
sag	See *surge*
slow average	A gradual, long-term change in average RMS voltage level, with typical durations greater than 2 s.
source current	The current needed to ignite a source, such as a detector lamp.
surge	A sudden change in average RMS voltage level, with typical duration between 50 µs and 2 s.

T

TCD	Thermal Conductivity Detector
transient	A brief voltage surge of up to several thousand volts, with a duration of less than 50 µs.

V

V	volt
V ac	volts, alternating current
V dc	volts, direct current
VGA	Video Graphics Array

W

w	Width
W	Watt

Index

D

E