Model 300 Manual

Continuously Variable ATR
0012-01X

Version 2.4

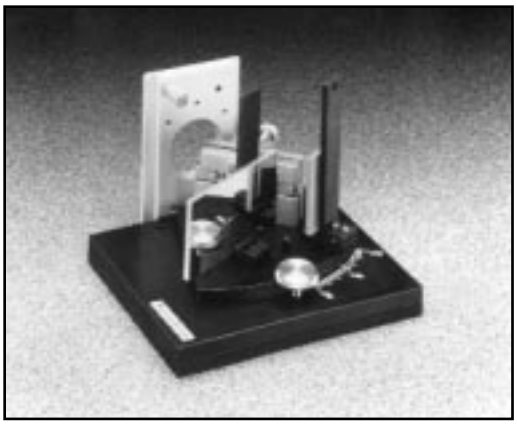

P/N 700-0007

SPECTRA-TECH

A subsidiary of Thermo Optek Corporation,
a Thermo Electron Company

website: www.spectra-tech.com
e-mail: info@spectra-tech.com

In USA
Spectra-Tech, Inc.
2 Research Drive
P.O. Box 869
Shelton, CT. 06484-0869
Phone: 203-926-8998
800-843-3847
FAX: 203-926-8909

In Japan
ST Japan
1-14-10 Kakigara-cho
Nihonbashi, Chuo-ku
Tokyo, 103 Japan
Tel: (033) (666) 2561
FAX: (033) (666) 2658

Table of Contents

General Information

Getting Started

Using the Model 300

Appendix A

Appendix B

Appendix C

General Information

Introduction to ATR Spectroscopy

Attenuated Total Internal Reflectance (ATR) Spectroscopy is a versatile and powerful technique for infrared sampling. Since materials are normally analyzed by ATR with either minimal or no sample preparation, ATR is a rapid technique for obtaining the infrared spectrum of a material. Materials which are either too thick or too strongly absorbing to be analyzed by transmission spectroscopy can be routinely analyzed using ATR spectroscopy. ATR is also useful when only the surface of the material is of interest.

The Manual

This manual is designed as a tutorial to guide you through the installation of the Model 300 Continuously Variable ATR and through a typical ATR spectroscopy analysis. If you have any questions, please contact a Spectra-Tech Technical Representative.

Theory

Internal reflection spectroscopy is a common infrared technique in which the infrared radiation is passed through an infrared transmitting crystal of high refractive index, allowing the radiation to reflect in the crystal one or more times. In this way, an evanescent wave penetrates into the sample in contact with the crystal, producing a spectrum of the sample. In the most common application of this technique, ATR (Attenuated Total Reflectance), the sampling surface is held in a vertical orientation, with sample material placed on one or both sides of the ATR crystal.

General Information

Title Here

The following equations define the effective angle of incidence for the Model 300. These calculations can be used to determine the best crystal materials for specific applications.

See Appendix B for a chart of pre-calculated angle of indices.

effective angle of incidence (θ)= $\theta_{IRA} - \sin^{-1}\left[\frac{\sin(\theta_{IRA} - \theta_{IRE})}{n_1}\right]$

# of reflections= l/t cot θ

depth of penetration (d_p)= $\frac{\lambda}{2\pi n_1 [\sin^2\theta - (n_2/n_1)^2]^{1/2}}$

effective pathlength= N x d_p

θ_{IRA} = angle designated on scale
θ_{IRE} = crystal face angle
λ = wavelength (mm)
n_1 = refractive index of crystal
n_2 = refractive index of sample
θ = crystal face angle (degrees)
l = length of crystal
t = thickness of crystal

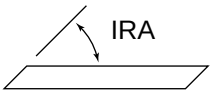

In addition, users will need to verify that the sampling crystal is not soluble or otherwise damaged by the sample. A summary of the physical properties of different crystal materials is listed in Appendix C. If additional information is required contact Spectra-Tech.

For a complete description of the theory of Attenuated Total Reflectance please refer to Spectra-Tech's FT-IR Technical Note #1: *Introduction to Attenuated Total Internal Reflectance (ATR) Spectroscopy.*

Product Description

The Model 300 - Continuously Variable ATR is a high performance, continuously variable angle ATR accessory. The angle is continuously variable form 30° to 60°. Unique mirror placement and pivoting make changing angles simple and repeatable while the focus is maintained at all angular positions.

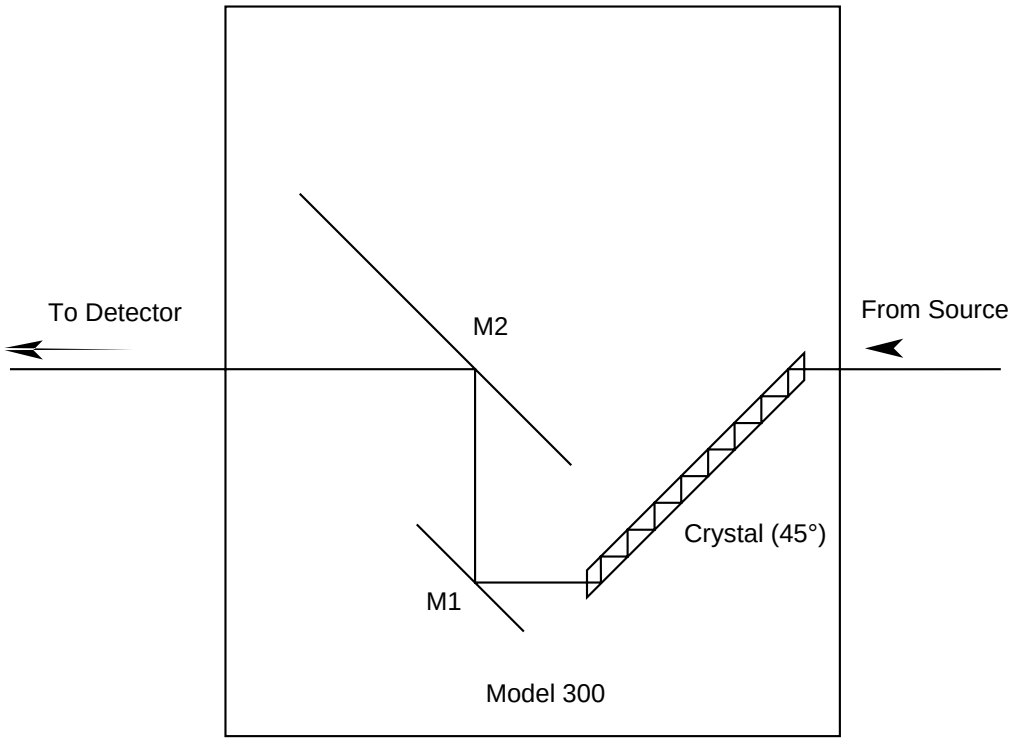

The diagram above shows the ray path of the IR beam. The energy beam from the source bounces through the crystal, reflects off the surface of mirror #1 onto mirror #2 and out to the detector.

Crystal Holder Assembly

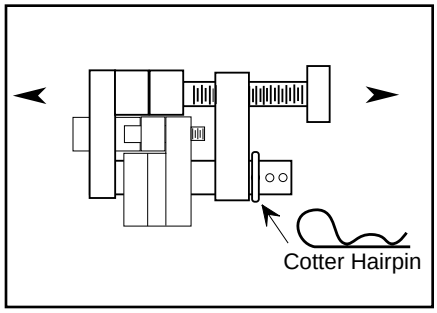

Prepare holder for crystal

Place the sample holder on a flat surface.

Remove the Cotter Hairpin.

Remove the C-clamp pressure plate assembly and set it aside.

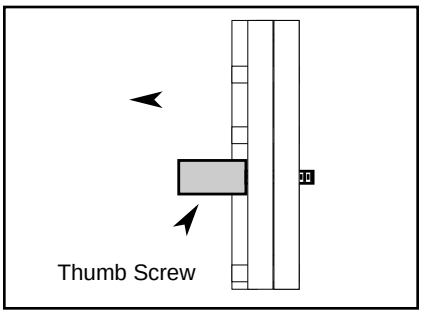

Prepare holder for crystal

Loosen the thumb screw on the crystal holder to open the crystal retention plates.

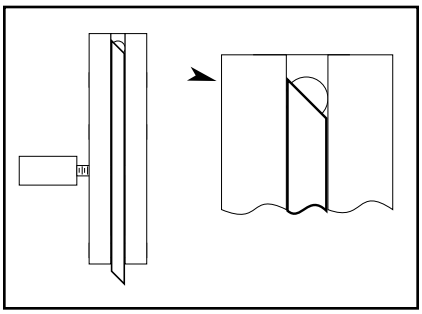

Install crystal

Place the crystal in the holder (in between the retention plates) so that the angled end of the crystal bisects the hole in the base of the holder.

Note: Use finger cots to prevent transferring skin oil to the crystal.

Crystal Holder Assembly

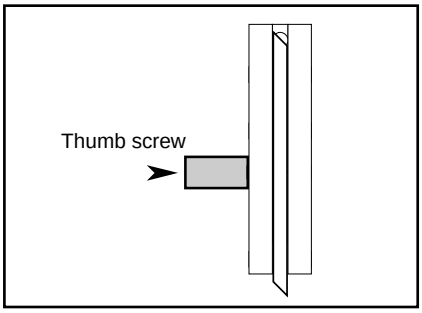

Tighten thumb screw

Finger tighten the thumb screw to hold the crystal in place.

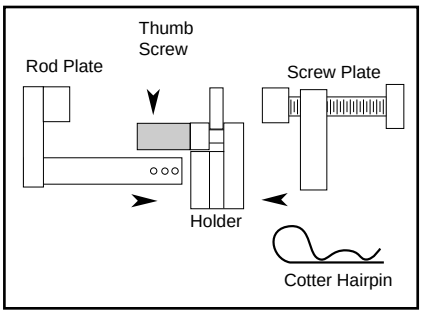

Replace C-clamps

Replace the C-clamp pressure plates- (Place rod plate so that rod fits through hole in holder and thumb screw on holder fits through hole in rod plate. Place screw plate so that rod fits though the hole in the screw plate.)

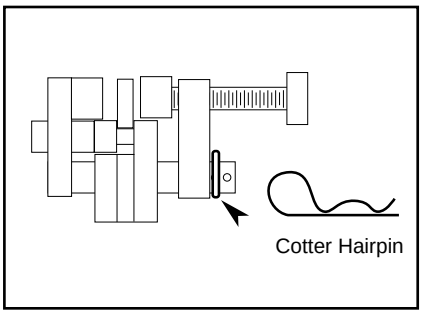

Replace locking pin

Place the Cotter Hair Pin through the hole in the rod.

Getting Started

Installation & Alignment

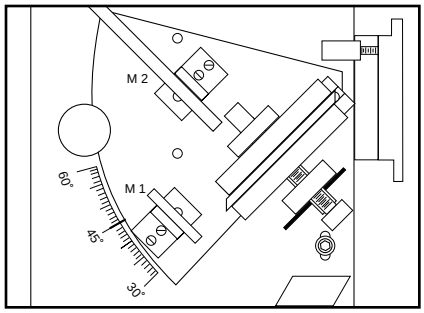

Place crystal holder in accessory

Place the crystal holder in the Model 300 so that the hole on the bottom of the holder is sitting on the pin closest to the slide mount and the slot in the bottom of the holder is sitting on the pin closest to mirror #1.

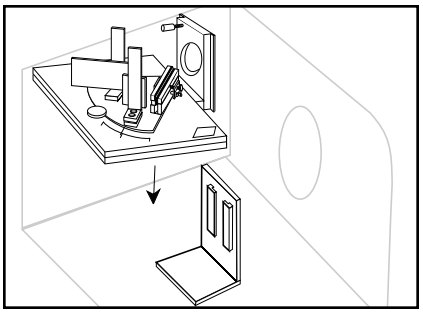

Place accessory in instrument

Place the Model 300 in the sample compartment so that it is sitting securely on the slide mount.

Tighten the locking screw (located on the slide mount holder).

Set instrument for alignment

Set your instrument to the energy monitoring mode (e.g. energy, align. tune)

Note: If the energy is not greater than 25%* of the open beam energy, follow the procedure outlined below.

*With a Ge or KRS-5 crystal, the energy throuhgput will be lower.

Installation & Alignment

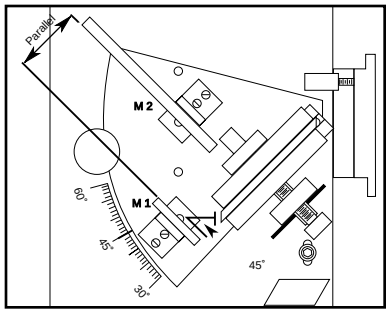

Prepare the accessory for alignment

Place the angle indicator to 45°.

Adjust the two mirrors so that they they are parallel to each other and perpendicular to the crystal.

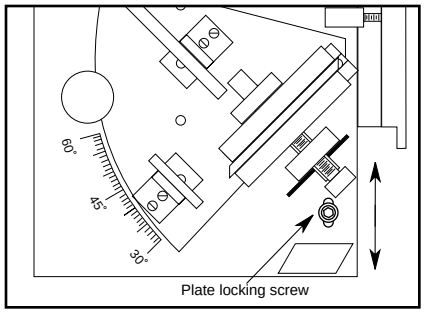

Maximize energy

Using an allen key, loosen the socket head cap screw (SHCS) located above the Spectra-Tech logo.

Slide the accessory's top plate forward and back maximizing the energy.

Tighten the screw.

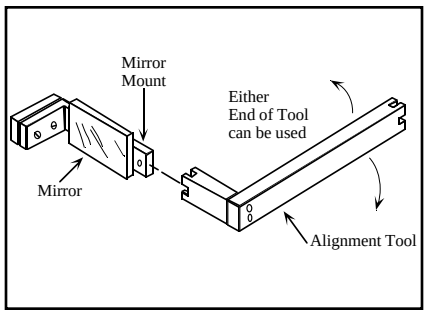

Maximize energy

Using the alignment tool, rotate mirror #1 maximizing the energy level.

Using the alignment tool, rotate mirror #2 maximizing the energy level.

Repeat mirror #1 alignment, then mirror #2 alignment.

Installation & Alignment

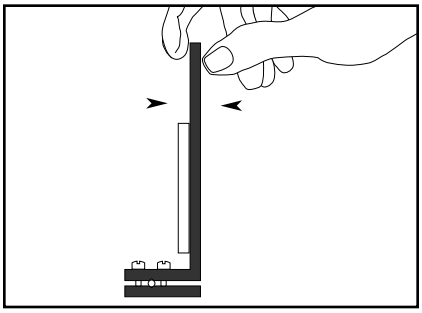

Adjust the mirror tilt

If the energy level is still below 25%, adjust the tilt on the transfer mirror assemblies as follows: While monitoring either the throughput energy number or the height of the centerburst of the interferogram, gently press down on the front side of the input mirror bracket. Then, repeat this step while pulling gently on the rear side of the mirror bracket.

- If energy increases by applying pressure to the front of the mirror bracket, loosen the front screw and tighten the back screw (see diagram below).
- If energy increases by applying pressure to the back of the mirror bracket, loosen the back screw and tighten the front screw.

Repeat this step for both transfer mirror assemblies. ***Do not attempt to make this adjustment on just one mirror.***

When both mirror assemblies have been adjusted, check to see that the throughput is greater than 25% of the open beam energy reading.

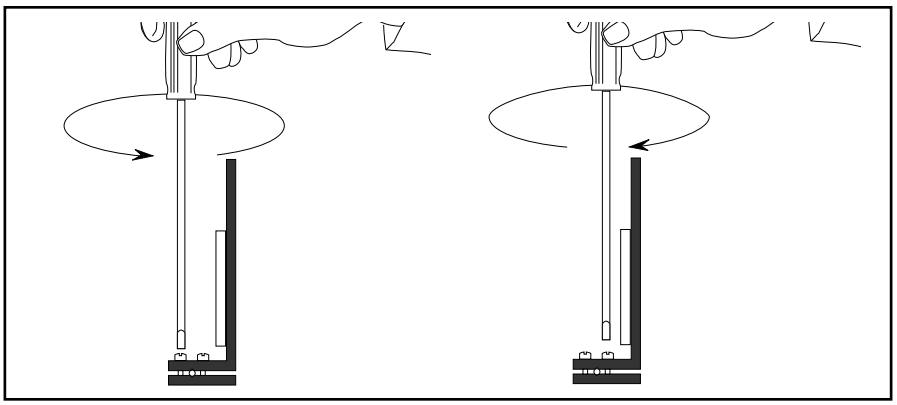

Performing an Experiment

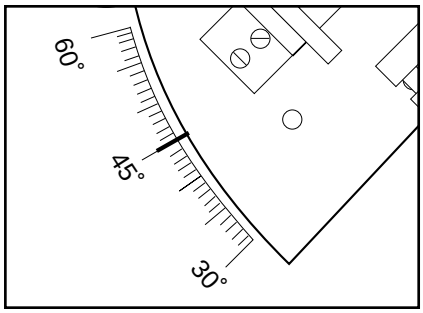

Set angle* & Acquire a background spectrum

Set the angle indicator to the desired angle setting (45° is the most commonly used setting - see page 15 for calculated angles of indices).

Acquire a background single-beam spectrum with the empty holder in place.

NOTE: It is very important to make sure that nothing is touching the crystal faces while the background scan is taken.

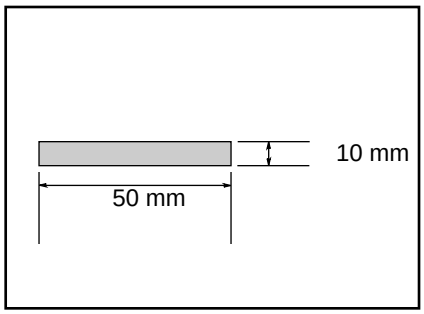

Prepare Sample

Remove the crystal holder from the accessory.

Cut the sample into 2 strips approximately 50mm x 10mm.

CAUTION: Be sure that the sample does not interfere with the crystal faces (angled ends).

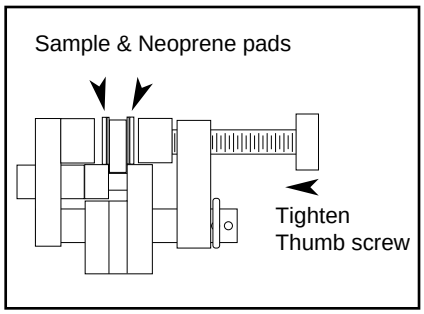

Load Sample

Place the sample on both sides of the crystal (sandwich the crystal).

Place the neoprene pads between the sample and the pressure plates.

Tighten the thumb screws to hold the sample in place.

*For an in depth discussion of angles of incidence and depth of penetration, see Spectra-Tech's Technical Note #1.

Performing an Experiment

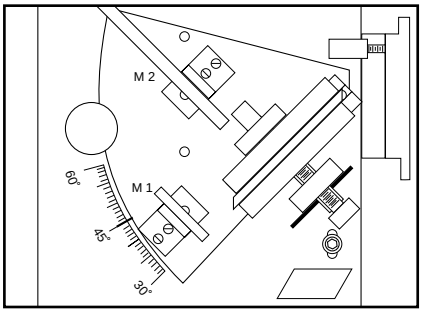

Replace crystal holder

Replace the crystal holder in the Model 300 so that the hole on the bottom of the holder is sitting on the pin closest to the slide mount and the slot in the bottom of the holder is sitting on the pin closest to mirror #1.

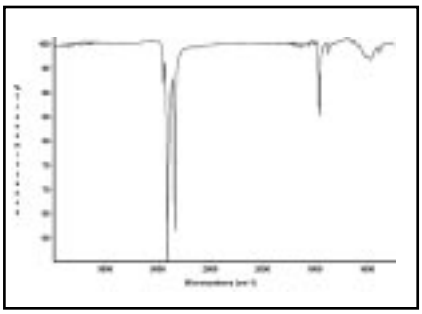

Acquire a sample spectrum

Acquire a sample single-beam spectrum.

Ratio it against the previously acquired background single-beam spectrum.

Appendix A

Changing to a 25mm crystal

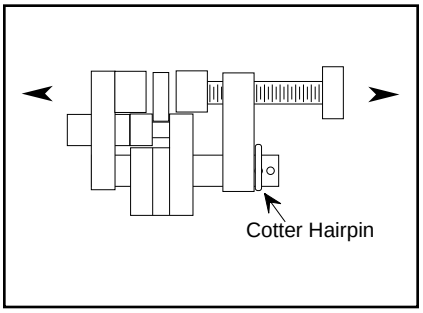

Prepare holder for crystal

Remove the sample holder form the accessory.

Place the sample holder on a flat surface.

Remove the Cotter Hair Pin.

Remove the C-clamp pressure plate assembly and set it aside.

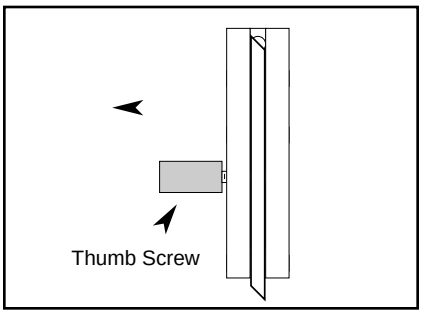

Prepare holder for crystal

Loosen the thumb screw on the crystal holder to open the crystal retention plates.

Remove the 50mm crystal.

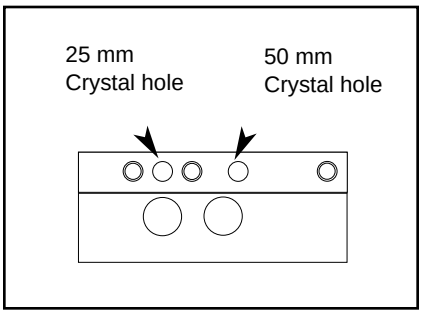

Prepare holder for crystal

Remove the thumb screw on the crystal holder and shift it to the 25mm location..

Changing to a 25mm crystal

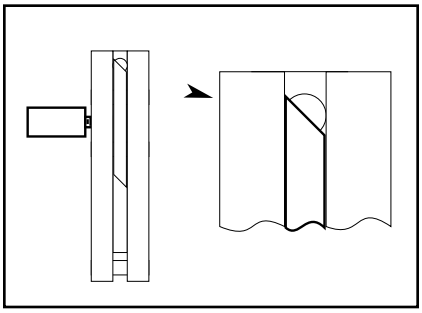

Install crystal

Place the 25mm crystal in the holder (in between the retention plates) so that the angled end of the crystal bisects the hole in the base of the holder.

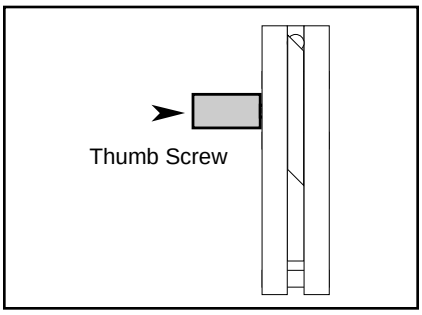

Tighten thumb screw

Tighten the thumb screw to hold the crystal in place.

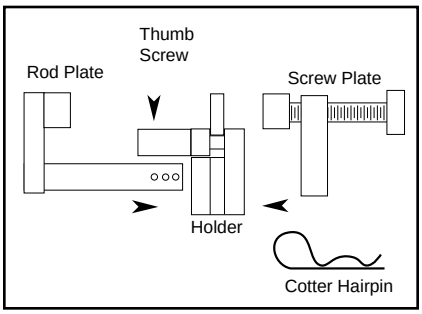

Replace C-clamps

Replace the C-clamp pressure plates- (Place rod plate so that rod fits through hole in holder and thumb screw on holder fits through hole in rod plate. Place screw plate so that rod fits though the hole in the screw plate.)

Changing to a 25mm Crystal

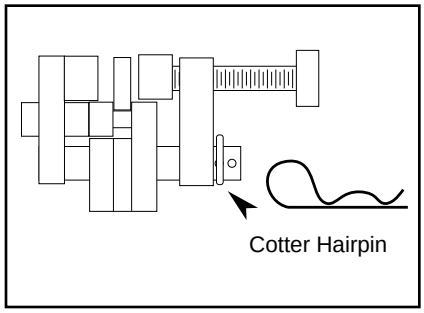

Replace locking pin

Place the Cotter Hair Pin through the hole in the rod.

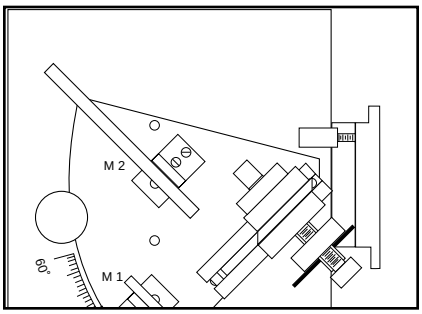

Place crystal holder in accessory

Place the crystal holder in the Model 300 so that the hole on the bottom of the holder is sitting on the pin closest to the slide mount and the slot in the bottom of the holder is sitting on the pin closest to mirror #1.

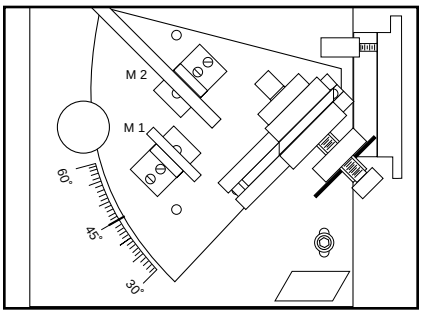

Change the mirror positions

Loosen the screw on the base of mirror #1, move mirror #1 to its alternate pin position and tighten the screw.

Follow alignment procedure described on pages 8 and 9.

Appendix B

Angles of Incidence allowing for the refractive index of the ATR crystal

θ_{IRA}= Angle designated on scale

θ_{IRE}= Calculated Angle of Incidence

KRS-5 (n= 2.38)

θ_{IRA} \ θ_{IRE}	**30°**	**45°**	**60°**
30°	30°	38.7°	47.9°
45°	36.3°	45°	53.7°
60°	42.1°	51.3°	60°

ZnSe (n= 2.40)

θ_{IRA} \ θ_{IRE}	**30°**	**45°**	**60°**
30°	30°	38.8°	48°
45°	36.2°	45°	53.8°
60°	42°	51.2°	60°

Ge (n= 4.01)

θ_{IRA} \ θ_{IRE}	**30°**	**45°**	**60°**
30°	30°	41.3°	52.7°
45°	33.7°	45°	56.3°
60°	37.3°	48.7°	60°

Si (n= 3.40)

θ_{IRA} \ θ_{IRE}	**30°**	**45°**	**60°**
30°	30°	40.6°	51.5°
45°	34.4°	45°	55.6°
60°	38.5°	49.4°	60°

Appendix C

Properties of Crystal Materials

	ZnSe	Si	Ge	KRS-5
Transmission Range (cm^{-1})	20,000-650	8300-660	5500-600	20,000-250
Refractive index @ 1000 cm^{-1}	2.4	3.4	4.0	2.37
Density (g/cm^3)	5.27	2.33	5.32	
Hardness (Knoop #)	150	1150	1150	40.2
Cleaning Agents	acetone, H_2O	acetone, H_2O	toluene, H_2O	MEK
Solvents which attack material	acids, strong alkalies	$HF+HNO_3$	hot H_2SO_4, aq. regia	complex.agents
Remarks	*hard, easily cracked*	*withstands thermal or mechanical shock*	*hard and brittle, reflection losses*	*deforms under pressure, toxic*