FIBER OPTICS

USER'S MANUAL

P/N 0007-XXX

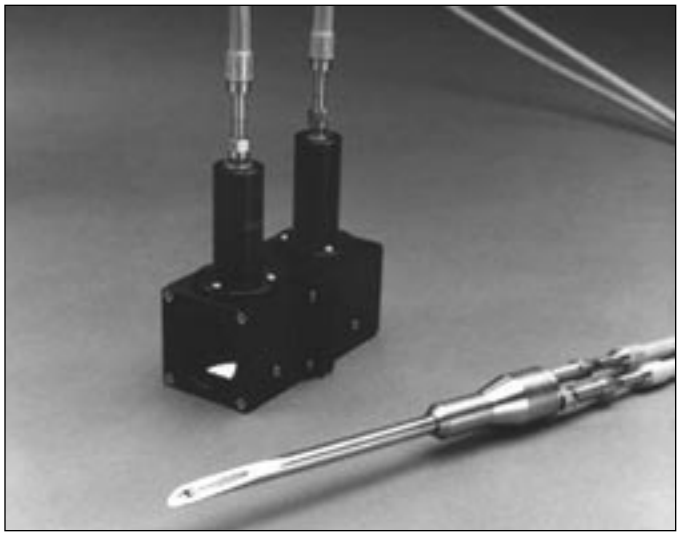

P/N 700-0043

Version 3.9

Thermo Spectra-Tech

A Thermo Electron business

Table of Contents

General Information

Installation & Alignment

Operation

General Information

The Manual

This manual is designed to be informative and easy to use regardless of your experience with FT-IR sampling accessories. It is recommended that you familiarize yourself with the installation, alignment and operation of each accessory before using it.

This manual contains the latest operating instructions. However, some changes may have occurred since this manual was published. If you encounter any problems or difficulties, please contact Thermo Spectra-Tech at 800-THE FTIR.

Packing & Unpacking

Each Fiber Optic kit is shipped in a foam filled cardboard protective box. Upon arrival please check the box to ensure that all pieces have been received and that no pieces are damaged. Save the box for storage and shipment of the kit.

Technical Support

Technical materials describing the use and theory of diffuse reflectance, attenuated total reflectance and specular reflectance are available from Thermo Spectra-Tech. Additionally, a team of scientists is available at Spectra-Tech to answer any of your questions. If you desire additional information please contact us at 800-THE FTIR.

Copyrights & Trademarks

Contact Thermo Spectra-Tech

230 Long Hill Cross Road
PO Box 869
Shelton, Connecticut 06484-0869

Phone: 203-926-8998, or 800-THE FTIR
Fax: 203-926-8909
www.thermospectra-tech.com
info@thermospectra-tech.com

General Information

Fiber Optic Cables Product Description

Thermo Spectra-Tech's fiber optic cables transmit infrared energy between the FiberLink and the Needle-Probes. The fiber optic cables are made of Chalcogenide, a mid-IR transmissive glass with chemical properties similar to AMTIR glass. Chalcogenide is infrared transmissive from 4000 to about 900 cm^{-1}. The fibers are glass clad and are housed in stainless steel for durability and ruggedness. Unlike other commercially available infrared fiber optic cables that are quite rigid, Thermo Spectra-Techs cables have a very flexible bend radius to analyze difficult-to-get-at samples and to reduce the risk of breakage. The fiber optic cables come in a standard length of 1.5 meters.

FiberLink Product Description

The FiberLink is a unique transfer optic accessory that transfers IR energy from the spectrometer to the fiber optic cables. The FiberLink is easily mounted in the sample compartment of the FT-IR. The FiberLink is an innovative interface because it does not employ traditional beam condensing optics that have separate x-y-z position adjustment and are difficult and tedious to align. Instead, it uses non-imaging parabolic cones to bring the focussed IR beam from the sample compartment to the cables making it easy to align.

ATR Needle-Probe Product Description

The patented (patent # 5,436,454) ATR Needle-Probe utilizes ATR (attenuated total reflectance) technology to measure the infrared absorbance of liquids. The unique design of this probe allows the bent fiber (within the probe) to act as the ATR element. No traditional crystal element is needed. The ATR Needle-Probe has a sampling head that is 5 mm in diameter. The small diameter of the probe head allows the user to analyze samples in containers such as microvials, small test tubes and reaction vessels that have narrow necks.

Reflectance Needle-Probe Product Description

The Reflectance Needle-Probe works with Thermo Spectra-Techs FiberLink and fiber optic cables to provide excellent sensitivity for the analysis of reflective materials and coatings on solid materials. The probe contains an input and an output fiber. The distance from these fibers to the sampling surface has been optimized for maximum sensitivity. The Reflectance Needle-Probe is designed for maximum energy throughput when performing external reflectance measurements. This needle-probe can be used to analyze samples as small as 3 mm. This is ideal for difficult-to-get samples such as circuit board components, recessed sample areas, small sample containers and large samples such as metal parts and forensic samples.

GENERAL INFORMATION

Probe Properties

	ATR Needle-Probe	Reflectance Needle-Probe
Fiber Material	Chalcogenide	Chalcogenide
Sampling Range	4000-900cm-1	4000-900cm-1
Probe Head Diameter	5 mm	5 mm
Useful Temperature Range	ambient to 60˚C	NA
Cable Length	1.5 meters	1.5 meters
pH Compatibility	1 - 9	NA

Cautions

WARNING: Avoiding the following cautions can result in permanent damage to your Fiber Optic accessory!!

- To avoid breaking the cables, do not bend cables into a diameter smaller than 6 inches.
- Do not drop the needle-probes or cables, which could result in permanent damage.
- The needle-probes can be used in solutions with a pH between 1 to 9. Using the probes in basic solutions will cause irreversible damage.
- Hand tighten all connections. The use of tools may damage the ends of the probes or cables.
- Avoid touching the ends of the probes and cables with your fingers. If necessary, clean these areas with a cotton ball and water.
- Do not close the sample compartment cover on the cable, which may permanently damage the cable.
- Avoid snapping or whipping the cables, this will cause irreversible damage.
- Avoid sudden temperature changes, this may permanently damage the needle-probes.
- Avoid the use of THF (Tetrahydrofuran), which will damage the probes.

FiberLink Installation & Alignment

Take a background of the empty sample compartment first.

Use the following parameters gain = 1 and scans = 32.

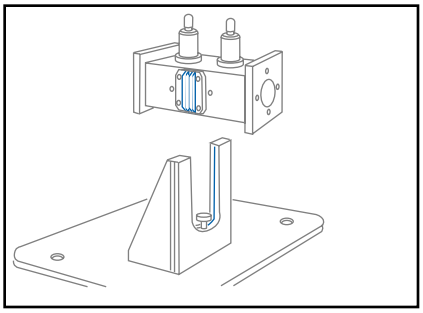

Place the FiberLink in the slide mount

Hold the FiberLink so that the non-imaging parabolic cones are facing up.

Slide the FiberLink onto the slide mount so that it sits securely in place.

NOTE: For center focus instruments the FiberLink should be centered in the middle of the sample compartment. For left focus instruments, the FiberLink should be placed as far to the left as it will go.

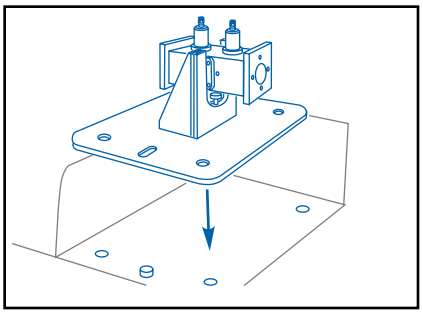

Place the FiberLink in the sample compartment

Place the baseplate/slide mount/FiberLink assembly in the sample compartment of the spectrometer according to the manufacturer's specifications.

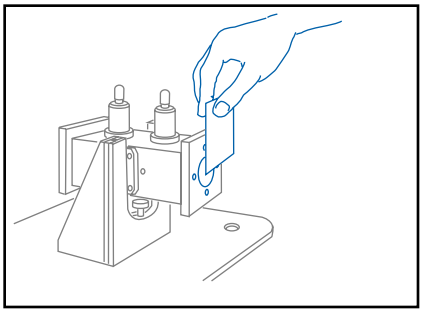

Adjust the Height of the FiberLink

Hold a piece of white paper in front of the input optics of the FiberLink. Adjust the height of the FiberLink (on the slide mount) so that the laser light and the IR beam are centered between the four (4) screws on the end plate of the FiberLink.

Fiber Optic Cable Installation

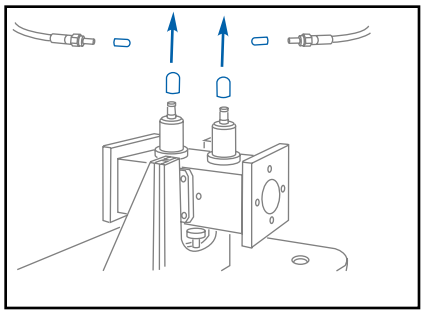

Remove the small red caps from each end of the fiber optic cable.

Remove the small caps from the two (2) ports located on top of the FiberLink.

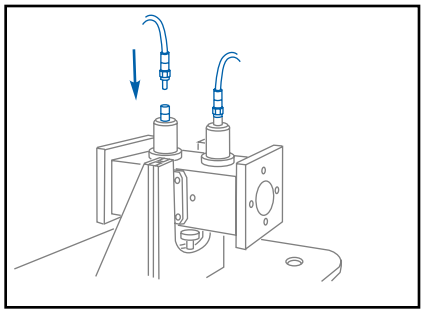

Carefully connect each end of the fiber optic cable to the ports located on top of the FiberLink.

HAND TIGHTEN ONLY!

NOTE: Be certain the the cable is sitting straight on the port before tightening the connector.

CAUTION: Be very careful to ensure that the cables do not bend beyond their bending radius (6 inches).

Maximize the interferogram signal

With the cable connected to the FiberLink, observe the interferogram signal of the FT-IR.

To maximize the interferogram signal, move the FiberLink up and down slightly on the slide mount while observing the signal.

Check the throughput of cable #1

When the signal is maximized take a sample file and display in %T.

Expected throughput should be in the neighborhood of 12%T as measured with a DTGS detector. Actual throughput may vary as a function of your spectrometer source collection optics and detector foreoptics.

Check the throughput of cable #2

Repeat the above procedure for cable #2.

Fiber Optic Cable Installation

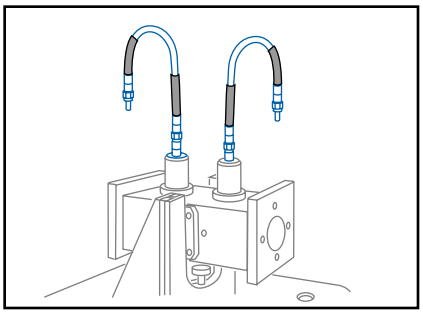

Reattach cable #1 to the FiberLink

Detach one end of cable #2 from the FiberLink (leave the other end attached to the FiberLink).

Reattach one end of cable #1 to the FiberLink.

NOTE: Be certain that the cable is sitting straight on the port before tightening the connector.

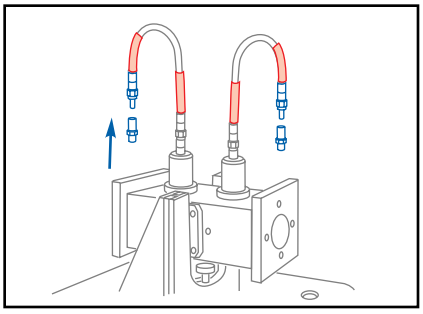

Attach the SMA connectors

Attach an SMA connector to the free ends of each cable.

ATR Needle-Probe

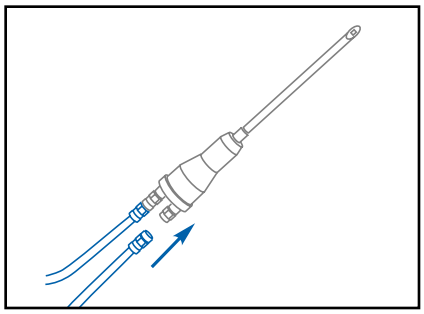

Attach the ATR Needle-Probe

Remove the plastic caps from each end of the needle-probe.

NOTE: Be careful not to touch the ends of the needle-probe.

Attach the fiber optic cables to the connections of the needle-probe.

Hand tighten the connectors. Do not use any tools to tighten the connections.

Check the throughput of the needle-probe

Use a background of the empty sample compartment as indicated on the top of page 4.

Hold the needle-probe so that the tip is not in contact with the sample but suspended in air.

Take a sample file and display in %T. Expected throughput should be in the neighborhood of 1%T as measured with a DTGS detector

Actual throughput may vary as a function of your spectrometer source collection optics and detector foreoptics.

ATR Needle-Probe

CAUTION: Be very careful to ensure that the cables do not bend beyond their bending radius. Do not let the cables drop to the floor or bench.

CAUTION: DO NOT immerse the ATR Needle-Probe in a liquid with a pH > 9!

NOTE: Before collecting each spectrum check that all fiber optic connections are properly hand tightened. The connections will gradually loosen from normal movement. This effect will be visible in the spectral results as lower throughput or optical fringing in the baseline.

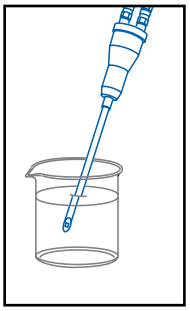

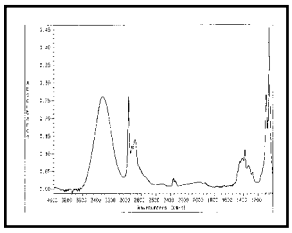

Collect the sample spectrum

Place the needle-probe in contact with the sample.

Collect the sample spectrum.

NOTE: It is necessary only for the tip of the needle-probe to touch the sample.

Important Note! The spectral region between 2300 - 2200 cm^{-1} (approximately) is completely absorbing, due to the H-Se band. This band can be computationally removed. See the spectrometer manufacturer's software manual.

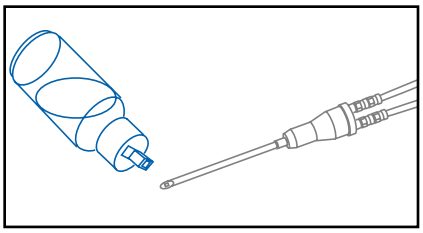

Clean ATR Needle-Probe

Use a cotton swab and a squirt bottle filled with room-temperature water to clean the ATR Needle-Probe.

CAUTION: Do not immerse the ATR Needle-Probe in running water.

Reflectance Needle-Probe

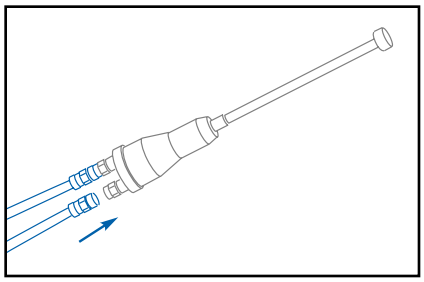

Attach the Reflectance Needle-Probe

Remove the small red caps from each end of the needle-probe.

Attach the fiber optic cables to the connectors of the needle-probe.

Hand tighten the connectors.

NOTE: Be careful not to touch the ends of the needle-probe.

Check the throughput of the needle-probe

Use a background of the empty sample compartment as indicated on the top of page 4.

Hold the needle-probe so that the tip is not in contact with the sample but suspended in air.

Take a sample file and display in %T. Expected throughput should be in the neighborhood of 1%T as measured with a DTGS detector

Actual throughput may vary as a function of your spectrometer source collection optics and detector foreoptics.

CAUTION: Be very careful to ensure that the cables do not bend beyond their bending radius. Do no let the cables drop to the floor or bench.

NOTE: Before collecting each spectrum check that all fiber optic connections are properly hand tightened. The connections will gradually loosen from normal movement. This effect will be visible in the spectral results as lower throughput or optical fringing in the baseline.

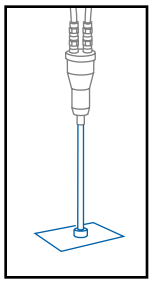

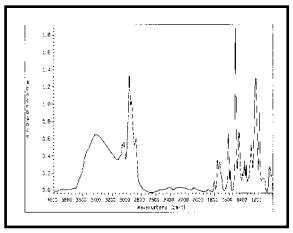

Collect the sample spectrum

Hold the needle-probe so that the tip is flat against the sample.

Collect the sample spectrum.

See Important Note regarding spectral range on the preceding page.

Clean the Reflectance Needle-Probe

Use a tissue to clean the Reflectance Needle-Probe.

Troubleshooting

PROBLEM	SOLUTION
Low Energy Throughput	1. Tighten the SMA connectors. 2. Readjust the FiberLink. 3. Check the spectrometer “gain” setting.
No Energy Through Detector	1. Tighten the SMA connectors. 2. Readjust the FiberLink. 3. Remove needle-probe, check cables for low throughput, see page 5. 4. Check for damage to the needle-probe.
Fringing in Spectra	1. Adjust the SMA connectors. If the connectors are not finger tight this may occur. 2. Clean cable and needle-probe tips with cotton ball and solvent to remove any contamination.
Poor Spectral Quality	1. Check the spectrometer, and check proper software settings. 2. Lengthen data collection time. 3. Use a different needle-probe more appropriate to the sample.

NOTES

Thermo Spectra-Tech

Empowering Your FT-IR

A Thermo Electron business

www.thermospectra-tech.com
info@thermospectra-tech.com

Thermo Spectra-Tech
230 Long Hill Cross Rd.
PO Box 869
Shelton, CT 06484-0869

Phone: 203-926-8998
800-THE-FTIR
FAX: 203-926-8909