4x Beam Condenser,
4x Beam Condenser with Diamond Cell
User's Manual
P/N 0010-3XX , P/N 0010-3XXD

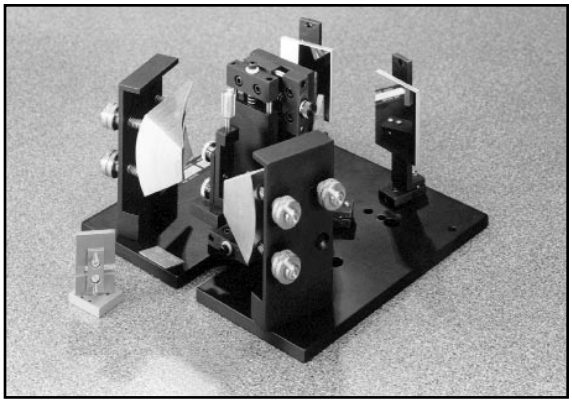

P/N 700-0089

Version 2.9

Thermo Spectra-Tech

A Thermo Electron business

Table of Contents

General Information

The Manual

This manual is designed as a tutorial to guide you through the installation of the 4X Beam Condenser and Diamond Cell through a typicalanalysis. If you have any questions, please contact a Thermo Spectra-Tech Technical Representative.

Packing & Unpacking

The 4X Beam Condenser and Diamond Cell is shipped in a protective foam filled box. Upon arrival please check the box to ensure that all pieces have been received and that no pieces are damaged. Save the box for storage and shipment of the kits.

Technical Support Center

Technical materials describing the use and theory of attenuated total reflectance, diffuse reflectance and specular reflectance are available from Thermo Spectra-Tech. Additionally, a team of scientists is available at Thermo Spectra-Tech to answer any of your questions. If you encounter any problems or difficulties, or desire additional information please contact the Technical Support Center at 800-THE-FTIR.

Copyrights & Trademarks

Contact Thermo Spectra-Tech

230 Long Hill Cross Road
PO Box 869
Shelton, Connecticut 06484-0869

Phone: 203-926-8998, or 800-THE FTIR
Fax: 203-926-8909
www.thermospectra-tech.com
info@thermospectra-tech.com

General Information

Product Description

Designed for use in FT-IR spectrometers, the 4X Beam condenser will reduce a typical beam of 8mm to 2 mm at the sampling point. Spectra-Tech's 4X Beam Condenser combines problem-free performance with condensing optics using efficient off-axis ellipsoidal mirrors. Two sample holders facilitate the microanalysis of solids, and mulls. A convenient mounting of prisms and holders on a unique micro X-Y-Z translation stage makes the accessory easy to use.

The Sample Compression Cell with Diamond Windows (Diamond Cell) is a device used to hold and flatten samples. The cell consists of a metal holder, a screw cap assembly and two diamond windows. To use the cell a diamond window is placed in the screw cap holder, the sample placed on the window and the second diamond is placed on the sample. The screwcap is then tightened down, flattening and thinning samples.

General

The Spectra-Tech 4x Beam Condenser 0010-3xx is designed for use in FT-IR spectrometers. It provides easy analysis for the microsampling of solids, and mulls. A typical FT-IR beam has a 3 to 18 mm diameter spot at the focus, which will result in a spot size between 0.75 and 4.5 mm.

Two sample holders and supplies are shipped with each beam condenser.

Included are Mull & Disc Pellet Holder, Micro ATR Holder, KRS-5 ATR crystal, Paper die inserts (sample of 12 pieces each) sizes 1.5 mm diameter, 1.5 x 9 mm, 11 mm diameter, 3 mm diameter and 5 mm diameter.

The manila paper die inserts are useful for making micro pellets with a 13 mm diameter die.

Optional Cells Available

Flow-Through Cell, Zero Dead Volume Cell

Additional ATR crystal materials are available as options in a wide range of pathlengths and materials.

CAUTION: note that all mirrors are uncoated (bare) aluminum. Do not touch the reflective surfaces. Care must be taken to avoid damage. They are relatively soft and difficult to clean without scratching.

Installation

The 4X Beam Condenser is configured for your spectrometer at Thermo Spectra-Tech. Inc. It is pre-aligned so that only minor mirror adjustments (tilt and/or rotation) may be necessary.

Record the open beam energy

Record the open beam energy of your spectrometer by monitoring either the throughput energy number or the height of the centerburst of the interferogram. This number is obtained with nothing in the sample compartment. Note this value for later use.

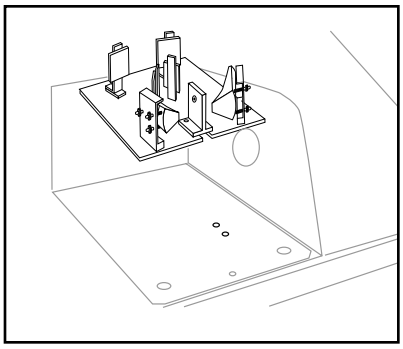

Place 4X Beam Condenser in sample compartment

Place the 4X Beam Condenser in the sample compartment of the spectrometer.

The base plate of some spectrometers may need to be removed. The ellipsoids should be facing towards the front of the instrument.

Replace the hold down screws and snug them down gently.

Record energy

Record the energy throughput of the Beam Condenser by monitoring either the throughput energy number or the height of the centerburst of the interferogram.

Compare this value with the value for the open beam energy throughput, recorded prior to installing the 4X Beam Condenser.

If the accessory throughput is 50 - 70% of the open beam throughput, then no further adjustments are required. If the energy throughput is below 50%, alignment of the transfer mirrors will be necessary.

Alignment

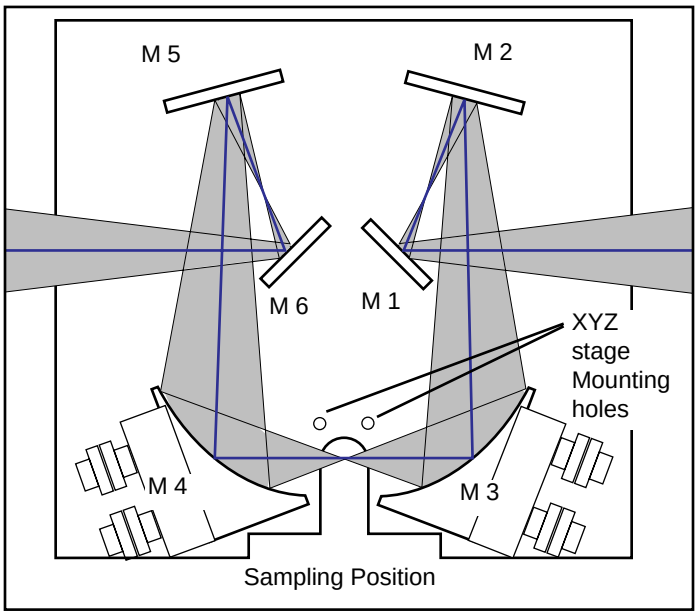

IR Beam Path

When making the mirror adjustments, make sure the spectrometer beam (laser or white light) is hitting the input mirror (mirror 1) squarely in the middle. Note that on most spectrometers, the laser beam is not located in the center of the IR beam. You should make fine adjustments on mirrors until the energy throughput is maximized.

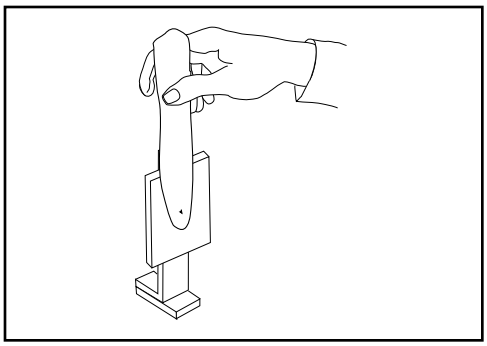

Course Alignment

Observe the laser or IR beams image by holding a piece of paper in front of Mirror 1. The beam should be centered on Mirror 1.

If not, check that the proper mounting procedure was used.

Follow the energy's path from mirror to mirror. The energy should be centered on all mirrors.

CAUTION: Be sure to avoid looking directly into the laser beam or at its direct reflection in any mirror. Do not tough or rub the paper on the mirror as this will scratch the surface.

Alignment

Alignment

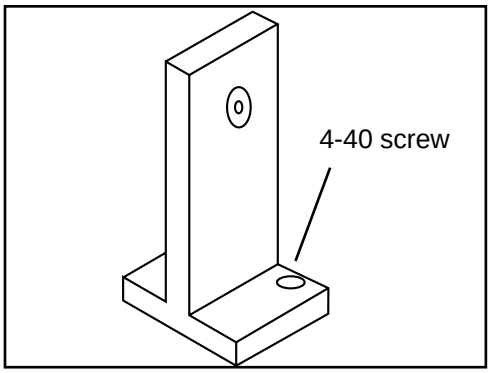

Alignment Aperture

The alignment aperture is essential to having a well aligned accessory . The aperture is centered to where the IR beam should be and ensures that the beam is in the proper position.

Place the alignment aperture in the sampling position and attach using the two 4-40” socket head cap screws.

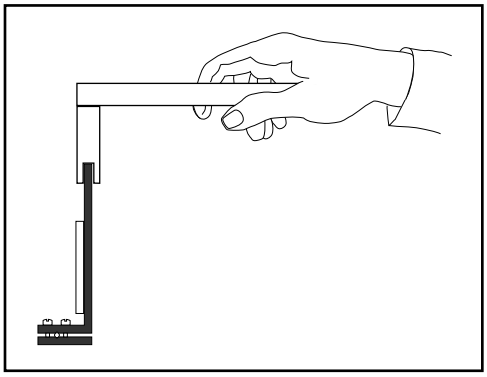

Mirror Alignment Tool

This tool is used to rotate the the mirrors. Attach the tool to the top of the mirror bracket and rotate for the highest energy.

The mirrors should be adjusted in the order Mirror 6, Mirror 1, Mirror 2, Mirror 5. Repeat this process twice or until the highest energy is achieved.

Alignment

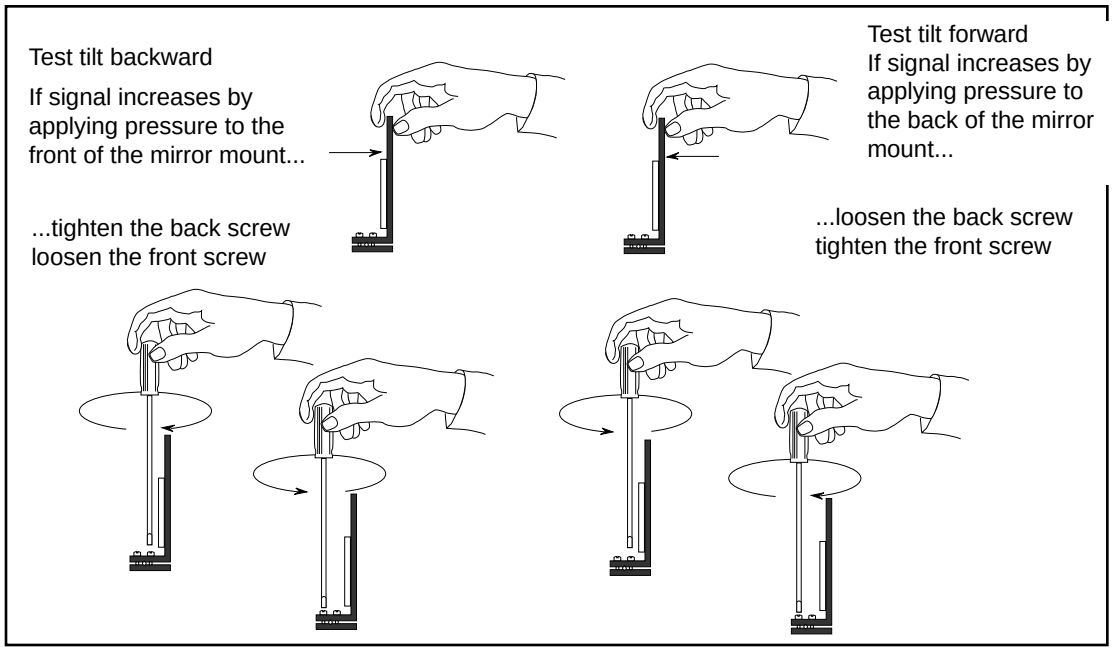

Mirror Tilt

The mirror tilt adjustments should be made in the following order. Peak energy mirror 6, mirror 5, mirror 1 and mirror 2. Repeat until the highest energy is achieved.

If the energy level is still below 50%, adjust the tilt on the mirror assemblies as follows:

While monitoring either the throughput energy number or the height of the centerburst of the interferogram, gently press down on the front side of the input mirror bracket. Then, repeat this step while pulling gently on the rear side of the mirror bracket.

- Apply pressure to the front of the mirror bracket, if energy increases, loosen the front screw and tighten the back screw.
- Apply pressure to the back of the mirror bracket, if energy increases,loosen the back screw and tighten the front screw.

Repeat this step for all transfer mirror assemblies. Do not attempt to make this adjustment on just one mirror. When all mirror assemblies have been adjusted, check to see that the throughput is between 50 - 70% of the open beam energy reading.

Operation

XYZ Stage

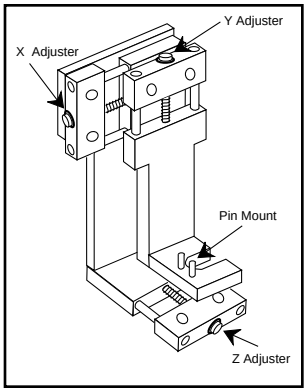

The XYZ Sampling Stage is the platform were all the Holders are placed. The XYZ Stage is adjusted by three screws to achieve the highest throughput.

Remove the alignment aperture with a 3/32” ball driver and replace with the XYZ Stage. The stage adjusters should be facing you.

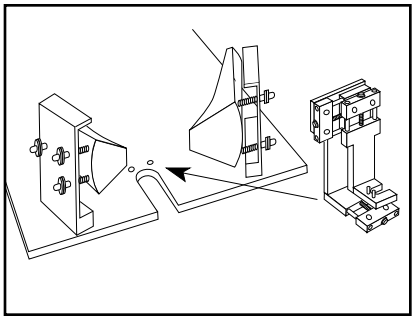

Mull & Disc Pellet Holder

The Mull & Disc holder 0010-509 serves several purposes.

1. It holds mulls prepared on 13 mm diameter discs.
2. It can hold 13mm diameter KBr pellets (using the Spectra-Tech Macro/Micro KBr Die).
3. It can hold pellets pressed in paper inserts.

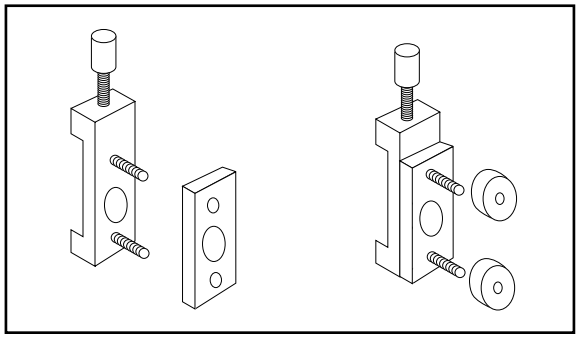

Operation

Mulls

Prepare the mull in a mortar and pestle.
Transfer the mull carefully into the center of a 13 mm window, cover with a second window, and insert into the holder.
Take care in sealing the holder. Applying pressure with the screws can shift the mull, or press it out completely.
Mount the pellet & mull holder on the pins of the XYZ stage. Once aligned, the assembly can be removed for cleaning or filling and then replaced in the beam condenser without realignment.

Micro ATR Holder

The Micro ATR Holder, part number 0010-510, is used for solids and films. The use of it requires adjustments to the beam condenser.

Adjust the Optical Unit

Carefully flip over the beam condenser (Caution: when mishandled, mirrors can be damaged) and loosen the 10-32 socket cap screws with the provided 5/32” hex key. Slide the M3 and M4 assemblies in the slots as far apart as possible and re-tighten the 10-32 screws.

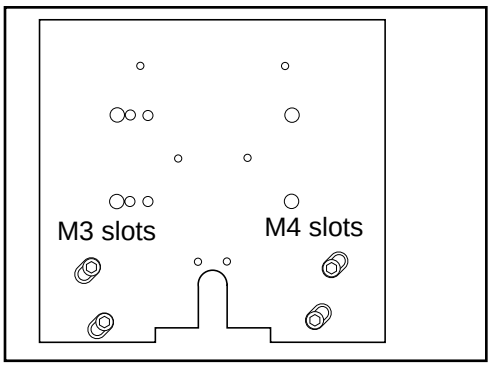

Before

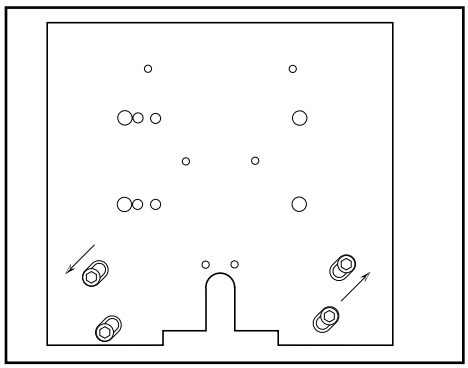
After

Operation

Micro ATR Holder

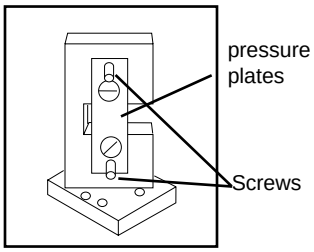

Using a screw driver remove the Stainless Steel Screws and sample pressure plates.

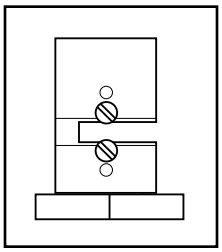

Using a screw driver loosen the nylon screws

NOTE: Wear finger cots when handling the ATR crystal.

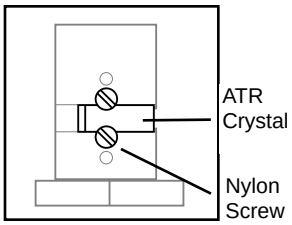

Place the ATR crystal on the holder so the face is angled towards you.

The edge of the crystal should meet the edge of the ATR Holder.

Tighten the nylon screws to hold the crystal firmly.

Install the sample pressure plates and leave them loose for the alignment procedure.

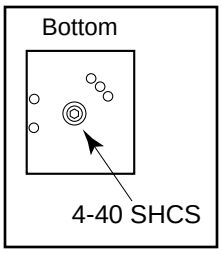

Adjusting the ATR Holder for different angle Crystals

At time of manufacture the holder is set at 45 degrees.

For 30 or 60 degree ATR crystals use the following procedure.

From the bottom of the ATR Holder remove the 4-40 screw with a 3/32” hex key.

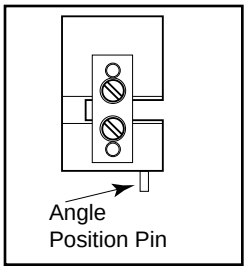

Place the angle positioning pin in the hole on the plate corresponding to the angle of the ATR crystal face you are using.

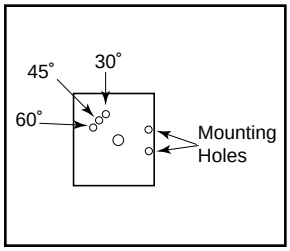

Replace the 4-40 Screw in the bottom and tighten.

Micro ATR Holder

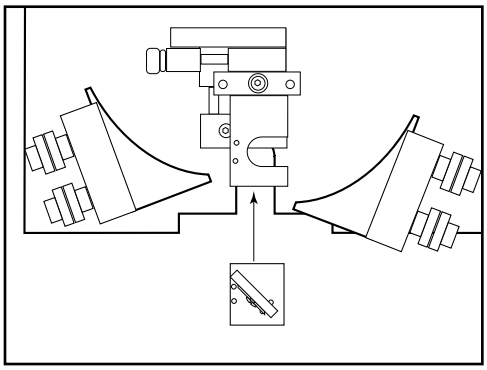

Mount ATR Holder on XYZ Stage

Place the Micro ATR holder with the crystal on the XYZ stage.

Adjust the Y and Z stage positions so that the incoming beam hits the crystal face in the center.

Adjust the X position

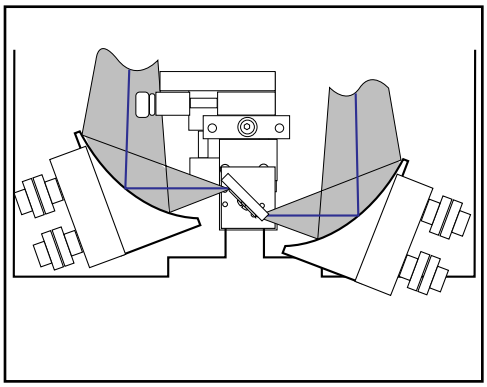

Adjust M3 so that the laser is focused on the ATR crystal angled input surface (loosening the upper outside nut on the mirror bracket enables you to adjust the ellipsoid).

NOTE: If the beam is missing the entrance face of the ATR crystal, it can pass through the flat face of the crystal, causing an "apparent" energy increase.

Align the beam condenser as before for maximum energy.

If sufficient energy cannot be obtained, M3 and M4 may require adjustment. Loosen the outside nuts on the mirror bracket. This will free the inner nuts and enable you to make adjustments to M3 and M4.

The highest energy throughput achieved is 10-20% depending on crystal material.

Operation

Running a Sample

Scan the background without a sample touching the crystal.

Remove the ATR holder and place the sample between the sample pressure plates and the crystal.

Make sure not to cover up the angled faces of the crystal.

Attach the pressure plates and tighten them down with the steel screws.

Place the holder back into the beam condenser.

Scan the sample.

Diamond Cell

Diamond Cell Option

The Diamond Cell is an option,q used in sample preparation for crushing and or flattening hard or soft compressible materials. The cell is transparent through the mid-IR region except for the lattice absorption bands in the 2200 cm-1 region.

The Diamond Compression Cell uses two 1 mm thick, Type IIA, non-faceted diamonds with a 1.8 mm free working area. The compression cell uniformly compresses samples to virtually eliminate the chance of cracking a diamond.

Diamond Cell

Beam Condenser Stage Modification

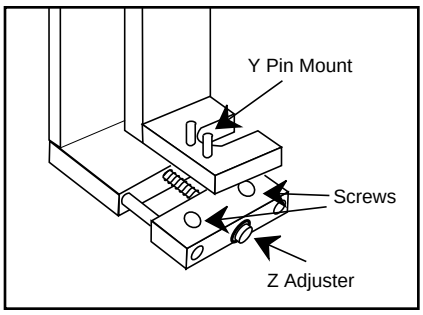

Modify the X-Y-Z Stage Assembly

Remove the X-Y-Z Stage Assembly from the Beam Condenser.

Remove the two Z-Adjuster screws (use a 3-32 ball driver). Save the two screws for later use.

Remove the X-Y-Z Stage.

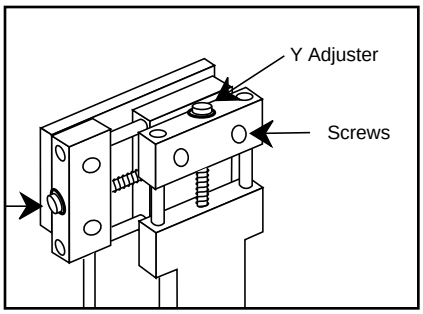

Modify the X-Y-Z Stage Assembly

Remove the two Y-Adjuster screws (use a 3-32 ball driver). Save the two screws for later use.

Remove the Y-Adjuster.

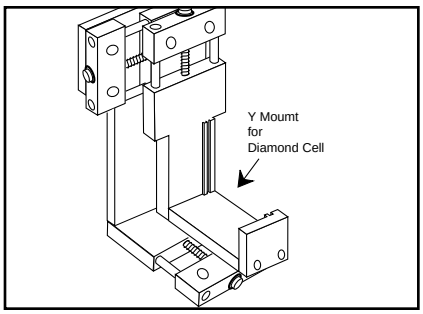

Attach Diamond Cell Mount to X-Y-Z Stage

Place the Diamond Cell Mount in the Y-Adjuster position. Use the two screws saved above to secure it.

Diamond Cell

Beam Condenser Stage Modification

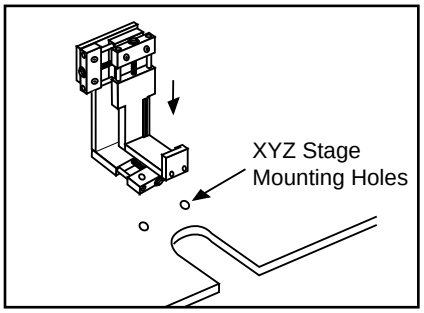

Reattach the X-Y-Z Stage to the Beam Condenser

Place the modified stage assembly in the Beam Condenser.

Use two of the screws saved above to secure it.

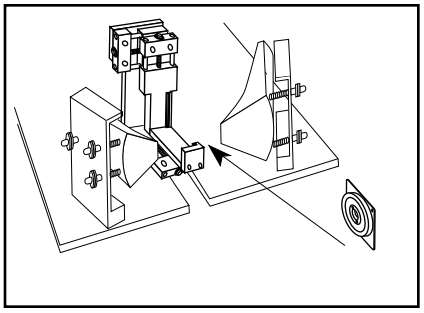

Place the Diamond Cell in the stage assembly

Place the Diamond Cell in the grooves in the modified stage assembly.

Note: The Diamond Cell must be assembled for accurate alignment and energy throughput readings.

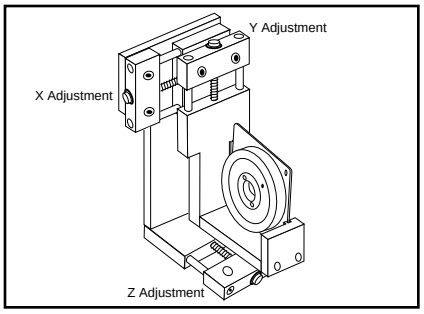

Maximize energy throughput & Collect Background

Use the stage controls to center the beam on the diamond windows.

The energy throughput should be about 10-20% of the open beam energy.

Collect a background spectrum.

Diamond Cell

Preparing a Sample

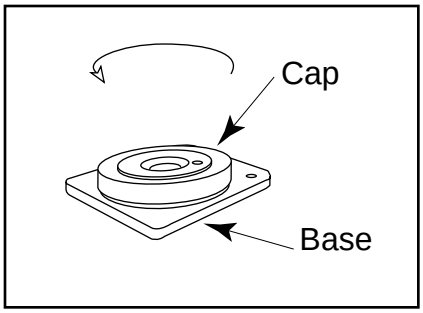

Unscrew the Cap

Unscrew the cap from the base of the Diamond Cell.

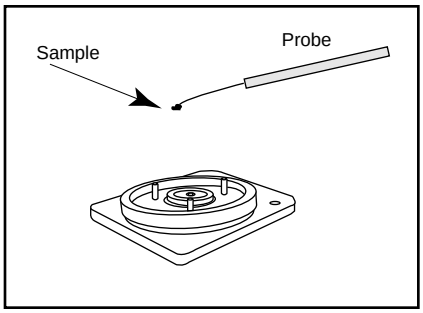

Place the bottom window in the Diamond Cell

Place a diamond window in the holder with the diamond surface facing up

Note: The tweezers supplied with the Diamond Cell may be helpful in the placement of the windows.

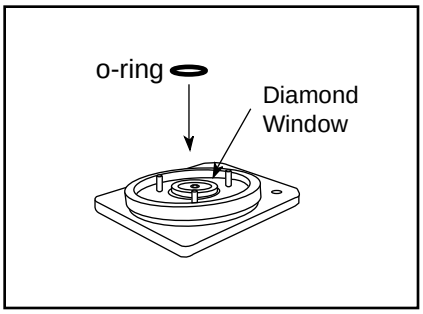

Place the O-Ring in the µSample-Plan

Place the O-Ring in the circular groove of the bottom diamond window

Note: The tweezers supplied with the Diamond Cell may be helpful in the placement of the O-Ring.

Diamond Cell

Preparing a Sample

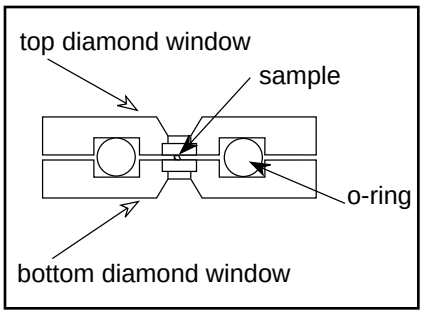

Sandwich the sample

Place the sample in the center of the diamond window.

Place the upper window directly on top of the sample making certain that the two windows line up together.

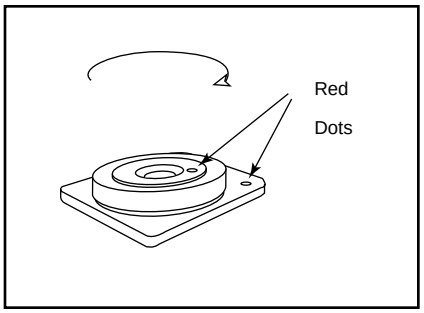

Replace the Cap

Line up the red dot on the base unit with the red dot on the cap.

Screw the cap down carefully until the threads catch.

While observing the sample, tighten the cap until the sample flattens.

Note: The use of a stereo microscope is recommended for this procedure.

Collect the sample spectrum

Replace the Diamond Cell in the Beam Condenser mount.

Collect a sample spectrum.

Ratio the sample spectrum to the background spectrum.

Options

Replacement Parts, Supplies and Options

Replacement Parts	Part Number
Mull & Disc Pellet Holder	0010-509
Micro ATR Holder	0010-510
KRS-5 ATR crystal	7002-152
Diamond window (single)	0042-458
O-Rings for Diamond Cell	849-0040
Alignment Aperture	3000-816
Mirror Adjusting Tool	2001-106
Screwdriver	870-R186

Supplies	Part Number
Paper die inserts (package of 200)	
1.5 mm diameter	0016-004
1.5 x 9 mm	0016-005
11 mm diameter	0016-006
3 mm diameter	0016-025
5 mm diameter	0016-026

Optional Cells	Part Number
Flow-Through Cell	0010-508
Zero Dead Volume Cell	0004-070
Micro Cavity Cells	7001-xxx
Holder for Micro Cavity Cell	0010-512

Thermo Spectra-Tech **Empowering Your FT-IR**

A Thermo Electron business

www.thermospectra-tech.com
info@thermospectra-tech.com

Thermo Spectra-Tech
230 Long Hill Cross Rd.
PO Box 869
Shelton, CT 06484-0869

Phone: 203-926-8998
800-THE-FTIR
FAX: 203-926-8909