THUNDERDOME

User's Manual for

P/N 0009-1XX

Version 2.1

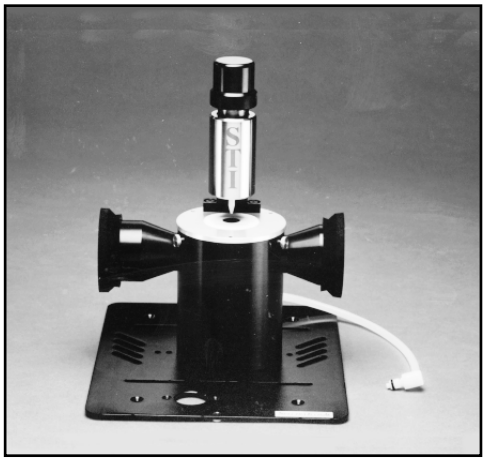

P/N 700-0110

Table of Contents

General Information

Introduction to ATR Spectroscopy.....1
Thunderdome Product Description.....1
ATR Theory.....2-3
The Manual.....3

Installation & Alignment

Preparation.....4-5
Purge Installation.....5
Install Thunderdome.....6
Optimize Energy.....7
The Pressure Tower.....8

Operation

Solids/Film Samples.....9
Films/Irregular Samples.....10-11
Liquid Samples.....12-13

General Information

Introduction to ATR Spectroscopy

Attenuated Total Reflectance (ATR) Spectroscopy is a versatile and powerful technique for infrared sampling. Since materials are normally analyzed by ATR with minimal or no sample preparation, it is a rapid technique for obtaining the infrared spectrum of a solid or liquid phase material. Materials which are either too thick or too strongly absorbing to be analyzed by transmission spectroscopy can be routinely analyzed using ATR spectroscopy. ATR is also useful when only the surface of the material needs to be analyzed.

Thunderdome Product Description

The Thunderdome is a unique single reflection HATR that utilizes a spherical ATR crystal as the sampling surface. This unique spherical sampling surface provides “point-to-point” contact with the “Pressure Tower” pressure device when analyzing solid samples. This point-to-point contact is ideal for analyzing hard, rigid, unyielding and difficult to analyze samples. The new fail-safe pressure device eliminates the risk of damage to the crystal surface, and reduces the need for tedious sample positioning.

The spherical configuration of the ATR produces a 2X reduction in the beam diameter. Concentrating the energy to a smaller spot size provides the ability to analyze even smaller samples, as compared to other single reflection ATR accessories. Another important benefit of the smaller sampling area is the ability to exert more pressure on the sample, ensuring optimum sample to crystal contact. The active sampling area of the Thunderdome is approximately 5 mm. The pressure device tip is 2 mm, essentially defining the practical sampling size. This small contact size permits the Thunderdome to very effectively analyze small samples such as single fibers, paint chips and polymer beads.

The Thunderdome utilizes a germanium ATR crystal. Germanium is an extremely rugged ATR material and has a spectral range of 4000-675 cm^{-1}. The Thunderdome is completely purgeable, pre-aligned, and baseplate mounted for stability, making it useful for both qualitative and quantitative analyses.

General Information

ATR Theory

Internal reflection spectroscopy is a common infrared technique in which the infrared radiation is passed through an infrared transmitting crystal of high refractive index, allowing the radiation to reflect in the crystal one or more times. In this way, an evanescent wave penetrates into the sample in contact with the crystal, producing a spectrum of the sample. A typical application of this technique, ATR (Attenuated Total Reflectance), the sampling surface is held in a vertical orientation, with sample material placed on one or both sides of the ATR crystal. This orientation, however, makes it difficult to achieve uniform sample contact with the crystal surface - a necessity if you desire reproducible data. In addition, it is virtually impossible to sample many non-rigid materials, such as liquids, gels or pastes. The Thunderdome overcomes this difficulty by providing a horizontal, “face-up” sampling surface, to allow convenient sample handling of virtually all materials.

The following equation defines the effective pathlength for the Thunderdome. These calculations can be used to determine the best crystal materials for specific applications.

Effective Pathlength (EPL):

EPL= No. of Reflections x Depth of Penetration(dp)

Depth of Penetration:

$$dp = \frac{\lambda/n_1}{2\pi\,[\sin^2\theta - (n_s/n_1)^2]^{1/2}}$$

λ = wavelength (cm^{-1})
n_1 = refractive index of crystal
n_s = refractive index of sample
θ = crystal face angle (degrees - approximately 45° for this accessory)

In addition, users will need to verify that the sampling crystal is not soluble or otherwise damaged by the sample. If additional information is required, contact Spectra-Tech Technical Support Center.

General Information

ATR Theory

	Ge
Transmission Range (cm^{-1})	5500-675
Refractive index @ 1000 cm^{-1}	4.0
Density (g/cm^3)	5.32
Hardness (Knoop #)	1150
Cleaning Agents	acetone, alcohol, H_2O
Solvents which attack material	hot H_2SO_4, aq. regia
Remarks	*hard and brittle, reflection losses*

For a complete description of the theory of Attenuated Total Reflectance please refer to Spectra-Tech's FT-IR Technical Note #1: *Introduction to Attenuated Total Internal Reflectance (ATR) Spectroscopy.*

The Manual

This manual is designed as a tutorial to guide you through the installation of the Thunderdome and through a typical Thunderdome analysis. If you have any questions, please contact a Spectra-Tech Technical Representative.

Installation & Alignment

Preparation

All Thunderdomes are pre-aligned and tested in a FT-IR spectrometer prior to shipment. Additionally, most versions of the Thunderdome are shipped with the Baseplate pre-attached to the accessory for rapid and reproducible installation. This baseplate attaches to the floor of your spectrometer sample compartment and provides properly positioned mounting holes for the Thunderdome. Therefore, only minor adjustments to the transfer mirrors should be required to maximize energy throughput. **Read all installation and alignment instructions before proceeding with any adjustments to the optics of your Thunderdome.**

CAUTION: The reflective surfaces used in the Thunderdome are gold-coated mylar tape. These *mirrors* are durable, however, their surface is relatively soft and difficult to clean without scratching. It is advisable to use care when handling the accessory and when placing samples on the accessory to avoid dropping materials on the mirror surface. Use compressed air to clean dust from the surface of the mirrors.

Remove the baseplate

Locate the four (4) shipping hold down screws (8-32) on the Baseplate of your spectrometer (if not already removed).

Remove the 4 screws with a slotted head screwdriver.

Remove the Baseplate completely from the sample compartment.

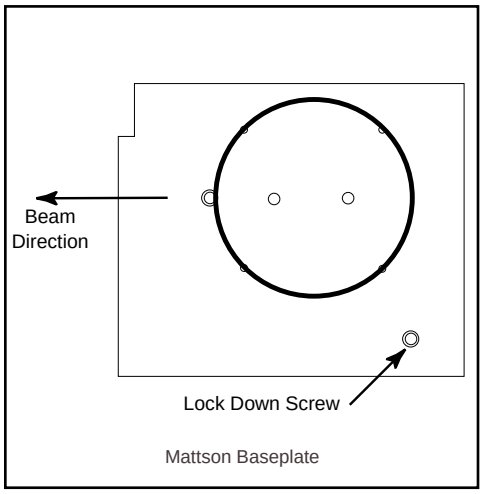

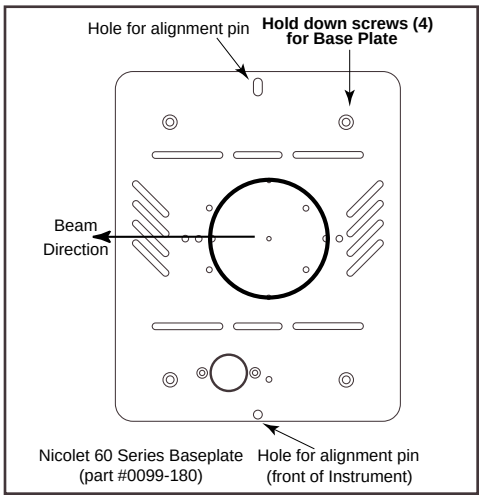

Installation & Alignment

Preparation

Record the open beam energy

Record the open beam energy of your spectrometer by monitoring either the throughput energy number or the height of the centerburst of the interferogram.

Note this value for later use.

Purge Installation

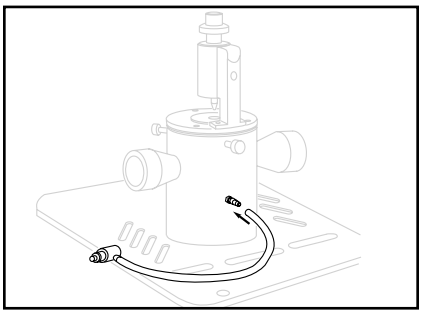

Attach hosing

Attach the open end of the plastic hosing (provided) to the purge nipple on the Thunderdome.

For Nicolet systems with purge capabilities: Attach the other end of the tubing to the socket in the sample compartment.

For all other instruments: Remove the fitting and attach the other end of the hose to an external dry, CO_2 free air source.

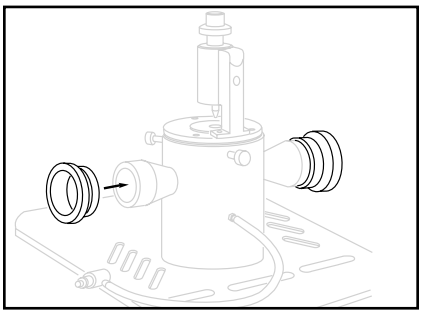

Attach foam purge rings

Attach the foam purge rings to both ends of the Thunderdome accessory. Once the unit is placed in the sample compartment, adjust the rings until they create a seal with the wall of the sample compartment.

Installation & Alignment

Install Thunderdome

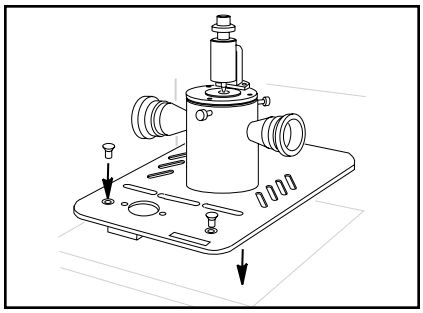

Place Thunderdome in compartment

Place the Thunderdome in the sample compartment of the spectrometer with the Spectra-Tech logo facing towards you.

Installation & Alignment

Optimize Energy

Record energy

Record the energy throughput of the accessory by monitoring either the throughput energy number or the height of the centerburst of the interferogram.

Compare this value with the value for the open beam energy throughput, recorded prior to installing the Thunderdome.

If the accessory throughput (with a new Ge crystal) is 12% (or greater) of the open beam throughput, then no further adjustments are required. At this level, the accessory will provide sufficient energy to permit good signal-to-noise ratios using a DTGS detector and moderately short acquisition times (less than one minute).

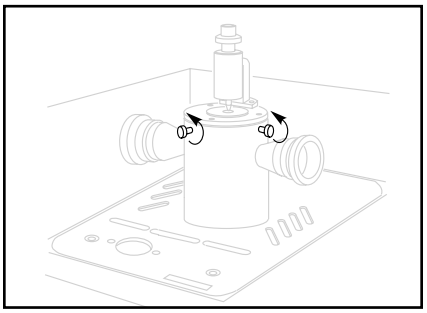

Optimize energy

If the energy throughput is below 12%, loosen the 3 knurled thumb screws on top of the accessory.

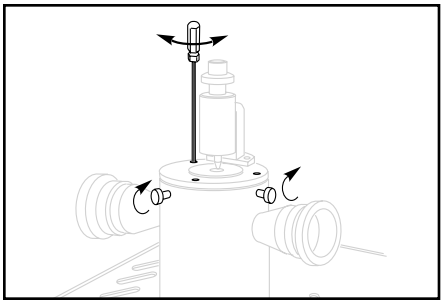

Optimize energy

While viewing the energy throughput of your spectrometer, gently adjust each of the 3 screws (accessible through the three holes located on the top surface of the Thunderdome) using the 3/32 balldriver to maximize the throughput.

Retighten the knurled thumb screws so that there is no movement or tilt in the top plate.

Installation & Alignment

The Pressure Tower

The acquisition of ATR spectra requires intimate contact between the ATR crystal and the sample. The Pressure Tower is designed to achieve optimum contact between solid samples of varying overall thickness and the crystal assembly. Optimum sample contact is achieved through adjustments to the micrometer screw gauge.

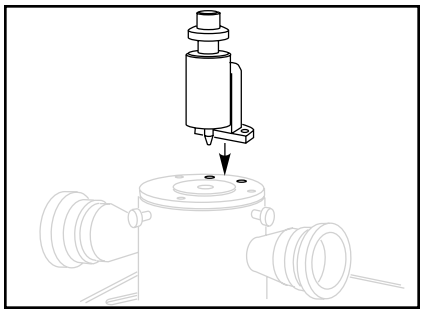

If necessary, Install the Pressure Tower

Locate the mounting holes (and the 10/32 socket screws provided) for mounting the Pressure Tower assembly.

Align the mounting holes on the Pressure Tower with the holes on the Thunderdome's top plate.

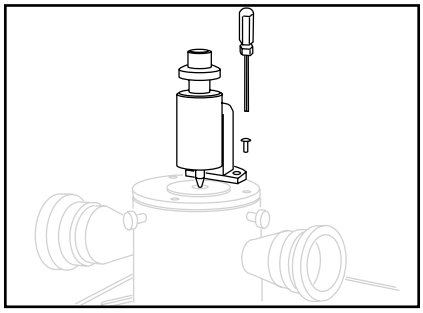

Secure Pressure Tower to Base Unit

Secure the Pressure Tower assembly to the Base Unit using the mounting screws.

Tighten with the 3/32 balldriver provided.

NOTE: The Pressure Tower is a failsafe mechanism which greatly reduces the risk of damage to the crystal. When using the **Pressure Tower**, please observe the following precautions:

Excessive pressure can crack and permanently damage the sampling crystal. Do not use the Pressure Tower to crush samples. Do not apply pressure to the crystal for extended periods of time as cracking of the measurement crystal can occur.

Operation

Solids/Film Samples

NOTE: For **Solids/Film samples** observe the following precautions:

- For best results, the sample should cover the crystal surface under the anvil.
- When analyzing films and irregular samples, use of the Pressure Tower is recommended to maintain even and intimate contact between the sample and the crystal.
- Make sure that your sample will not attack the crystal material.

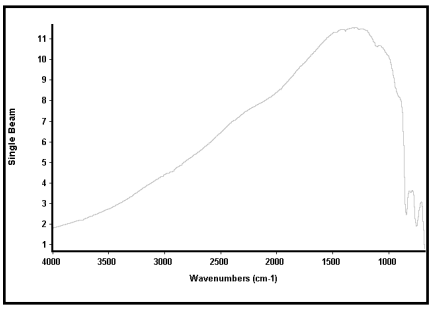

Acquire a background spectrum

Acquire a background single-beam spectrum with the clean crystal sampling plate in place.

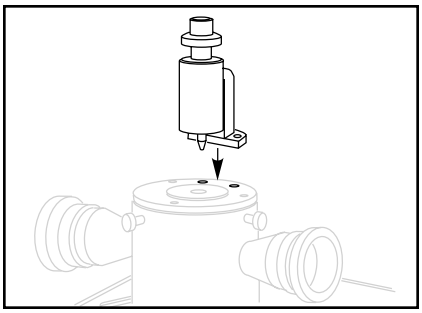

Install the Pressure Tower (IF NECESSARY)

Follow the installation procedure on page 10.

Operation

Films/Irregular Samples

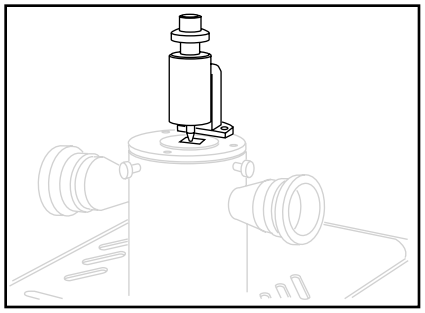

Place sample on the crystal sampling surface

Place your sample on the crystal sampling surface observing the precautions listed on page 10.

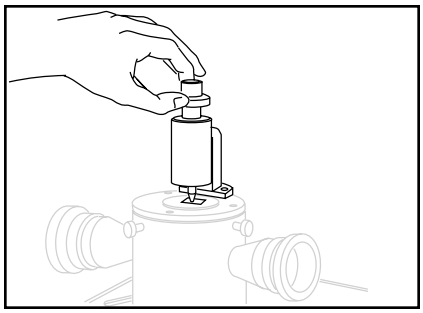

Apply pressure

Turn the knurled ring on the Pressure Tower until it begins to slip and you hear the audible click. At this point there is maximum pressure applied to the sample. Note, because the Pressure Tower is a fail-safe device, the slippage you experience will prevent damage to the crystal.

Watch to see that the sample remains centered under the anvil.

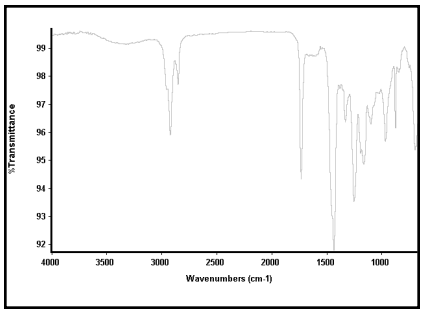

Acquire a sample spectrum

Acquire a sample single-beam spectrum.

Ratio it against the previously acquired reference single-beam spectrum.

Films/Irregular Samples

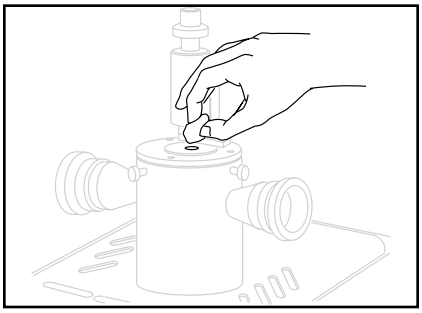

Clean the crystal

Release the Pressure Tower.

Clean the sample off the crystal using a cotton ball or cotton swab moistened with an appropriate solvent.

Operation

Liquid Samples

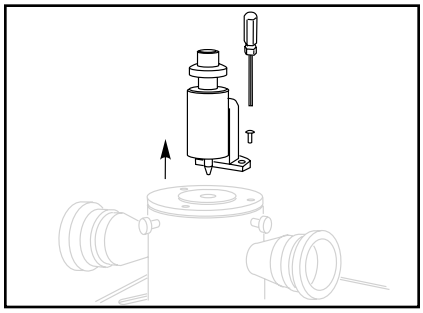

Remove Pressure Tower

Place the Thunderdome accessory on a horizontal surface (table top).
Be sure the Pressure Tower is not in contact with the crystal surface.
Loosen and remove the two **10/32** socket head cap screws which hold the Pressure Tower to the Optical Unit.
Remove the Pressure Tower from the Optical Unit.

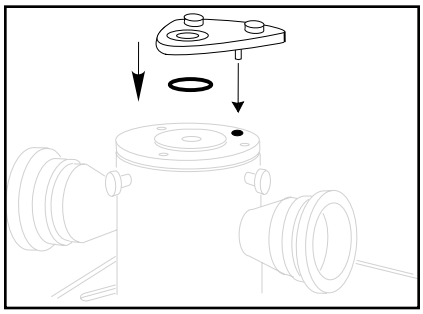

Place Liquid Holder

Align pin on Liquid Holder to the pin hole on the surface plate.
Be sure the O-Ring is in place in the O-Ring groove located on the underside of the Liquid Holder Plate.
Tighten the thumbscrews by hand. Do not use a screwdriver.

Note: Be careful not to over tighten the thumbscrews!

WARNING: The standard O-Ring is viton. Viton has excellent chemical resistivity to petroleum products and solvents. It is not recommended for exposure to Ketones; amines, low molecular weight esters, ethers; nitrohydrocarbons, hot hydrofluoric or chlorosulfonic acids. Please contact Spectra-Tech for alternative O-Ring materials.

Operation

Liquid Samples

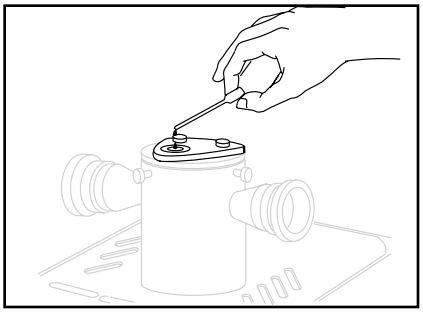

Filling liquid into the Holder

Do not over fill the holder.

The crystal surface needs only to be covered by a thin film of liquid.

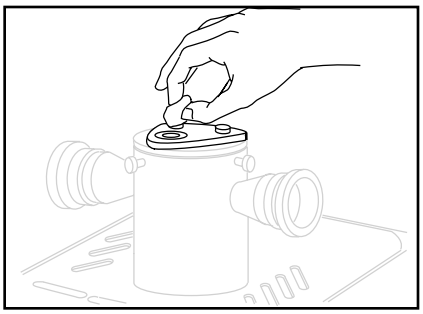

To Clean the Crystal

Use a tissue, a cotton swab, or a cotton ball moistened with an appropriate solvent and gently rub in a circular motion.

Note: After use, sample can build up and around the O-Ring seal. The O-Ring is outside the active infrared area and should not be detected. If erroneous sample measurements occur, remove the liquid holder and clean the O-Ring and O-Ring groove.

To Remove Liquid Holder

Reverse these instructions to detach the Liquid Holder.

Clean crystal after removal.