FOUNDATION SERIES

User's Manual

P/N 0071-2XX, 0072-2XX, 0073-4XX, 0074-1XX, 0075-100, 0076-XXX, 0077-XXX

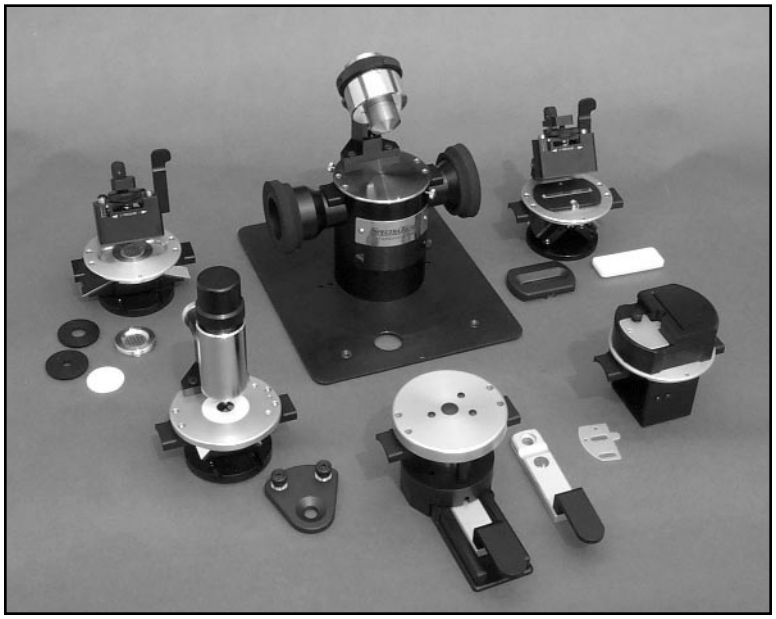

P/N 700-0156

Version 1.9

Thermo Spectra-Tech

A Thermo Electron business

Table of Contents

Table of Contents

Table of Contents

General Information

The Manual

This manual is designed as a tutorial to guide you through the installation of the Foundation Series™ and through a typical Foundation Series analysis. If you have any questions, please contact a Thermo Spectra-Tech Technical Representative.

Packing & Unpacking

The Foundation Series is shipped in a protective foam filled cardboard box. Upon arrival please check the box to ensure that all pieces have been received and that no pieces are damaged. Save the box for storage and shipment of the kits.

Technical Support Center

Technical materials describing the use and theory of attenuated total reflectance, diffuse reflectance and specular reflectance are available from Thermo Spectra-Tech. Additionally, a team of scientists is available at Thermo Spectra-Tech to answer any of your questions. If you encounter any problems or difficulties, or desire additional information please contact the Technical Support Center at 800-THE-FTIR.

Copyrights & Trademarks

Contact Thermo Spectra-Tech

230 Long Hill Cross Rd.
P.O. Box 869
Shelton, Connecticut 06484-0869

Telephone: 203-926-8998, or 800-THE-FTIR
Fax: 203-926-8909
www.thermospectra-tech.com
info@thermospectra-tech.com

General Information

Description of the Foundation Series

The Foundation Series utilizes a single common base module, "the Foundation" which mounts in your spectrometer's sampling compartment. Each of the accessory Swap-Top modules drop into the Foundation for rapid change of analytical technique to a method which matches the precise needs of your application.

The Foundation Series combines the flexibility of multiple sampling technologies with high performance optical design to minimize analysis time and maximize your lab's sample throughput. The Foundation Series design also utilizes an integrated purge to eliminate CO_2 and water vapor interferences.

Currently there are six (6) Swap-Top modules to choose from with more choices planned for the future. The modules currently available include: Thunderdome, SpeculATR, Multi-Reflection HATR, CPC Diffuse, Endurance and Transmission. All of the modules incorporate an alignment-free design, allowing the user to install multiple Foundation modules in different FT-IR spectrometers (even different brand spectrometers) without the need to perform tedious alignment procedures. This cross-platform compatibility also reduces your need to buy redundant accessories for different manufacturer spectrometers, providing exceptional value for your lab equipment budget.

Who is the system for?

* Labs that are constantly switching accessories
* High throughput, rapid response lab environments
* Labs with multiple FT-IR platforms

Features

Swap-Top modules which mount in a common base (the Foundation)

No alignment

Quick purge

Low-cost Swap-Top upgrades

Cross-platform compatibility of modules

Applications

Strongly absorbing samples (Thunderdome, SpeculATR, Fiber Optics)

Biological fluids (SpeculATR, Multi-Reflection HATR)

Aqueous samples (Thunderdome, SpeculATR, Multi-Reflection HATR, Fiber Optics)

Polymer films (Thunderdome, Endurance)

Coatings on reflective substrates (SpeculATR, Fiber Optics)

Adhesive samples (Thunderdome, Endurance)

Organic samples (Multi-Reflection HATR)

Powders (CPC Diffuse)

Acidic/Caustic Liquids (Endurance)

Abrasive materials (Endurance)

Installation

Installing the Foundation

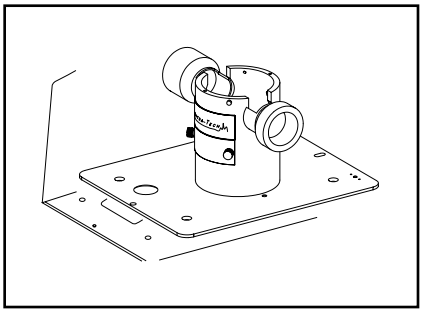

Place the Foundation in the compartment

Place the Foundation base in the sample compartment of the spectrometer with the Thermo Spectra-Tech logo facing toward you.

Note: Depending on the spectrometer there may be alignment pins and lock down screws.

Setting up the Purge

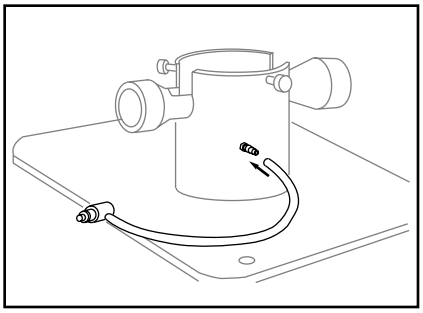

Attach the tubing

Attach the open end of the plastic tubing (provided) to the purge nipple on the Foundation.

For Thermo Nicolet systems with purge capabilities: Attach the other end of the tubing to the socket in the sample compartment.

For all other instruments: Remove the fitting and attach the other end of the hose to an external dry, CO_2 free air source.

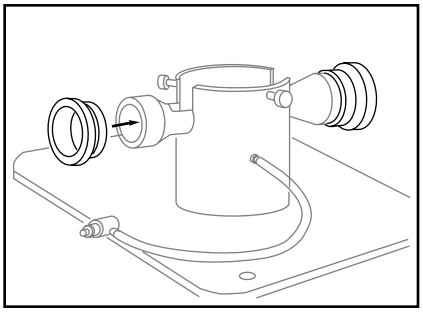

Attach the foam purge rings

Attach the foam purge rings to both ends of the Foundation base. Once the unit is placed in the sample compartment, adjust the rings until they create a seal with the wall of the sample compartment.

Installation

Installing a Module

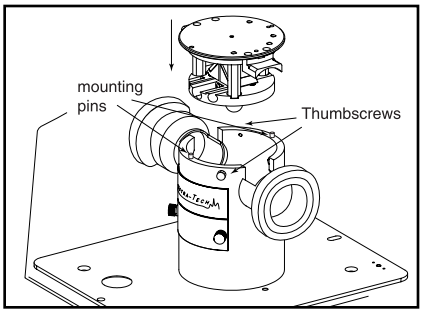

Installing a Module

If not previously installed, install the accessory module.

Back out the two thumbscrews far enough to permit installation of the Swap-Top module.

Locate the mounting pins on either side of the Foundation base. Align the mounting pins on the Foundation base with the holes on the accessory housing.

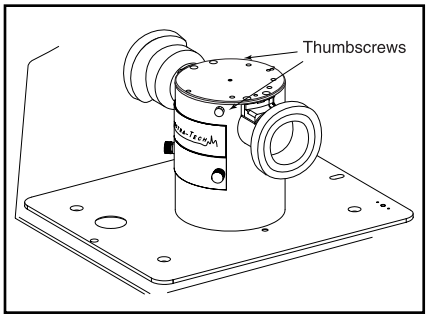

Retighten the two thumbscrews to secure the Swap-Top module for sampling.

A Swap-Top Is

A Swap-Top module is a component that drops into the Foundation base. Each Swap-Top is pre-aligned and will work in any Foundation, even those installed in different spectrometers. This eliminates the need to buy the same accessory for different instruments. The modules are easily installed and removed, so you can change sampling techniques quickly.

There are seven different Swap-Top modules currently available:

- Thunderdome
- Multi-Reflection HATR
- SpeculATR
- CPC Diffuse
- Transmission
- Endurance
- Fiber Optics

These are detailed on the following pages.

Other modules are planned for the future, so the Foundation will have increased flexibility.

Swap-Top Modules

Thunderdome Swap-Top Module

The Thunderdome Swap-Top module is a rugged ATR accessory with a Germanium crystal. The Thunderdome, available since 1997 as a stand-alone accessory, is now available as a Foundation Series module, further increasing utility. The Thunderdome is the largest selling single-reflection ATR accessory on the market today. It is easy to see why. The Thunderdome gives you rugged performance utilizing a Germanium crystal material. Germanium has a high refractive index and therefore a shallow depth of penetration making it ideal for analysis of very strong absorbers. Germanium has excellent chemical resistivity, attacked only by Aqua Regia and sulfuric acid. Finally, the Thunderdome features a domed sampling surface to focus the infrared beam and a fail-safe pressure device to obtain a good spectrum on the first try, an unprecedented feature in ATR. The newest enhancements to the Thunderdome are the Tilting Pressure Tower and the Lightning Viewer.

Features

Single-reflection ATR Germanium crystal

Tilting pressure device for easy cleaning

Reproducible pressure applied to the sample

High refractive index crystal

Collects infrared data on almost any sample

Applications

- Single polymer beads
- Formed, rigid polymers
- Paint chips
- O-rings
- Paper/contaminants
- Glass composites
- Liquids, including aqueous solutions, corrosives and caustics

The expected throughput of the Thunderdome Swap-Top module should be in the neighborhood of 30% of the open beam energy at 2000 cm-1.

Actual throughput may vary as a function of your spectrometer's source collection and detector foreoptics.

Pressure Device Options

Tilt Back Pressure Tower

The Tilt Back Pressure Tower has a "hinge" mechanism, that allows the tower to tilt back to 60 degree angle, allowing you to clean the crystal with ease. It has a slip-clutch, calibrated pressure mechanism for consistent pressure on the sample.

Lightning Viewer

The Lightning Viewer is an optional pressure device that mounts on the Thunderdome. The Lightning Viewer provides 8.5X viewing capabilities. This magnification allows you to see the sample on the crystal, facilitating manipulation and accurate positioning of small samples. the Lighting Viewer has the same slip clutch, calibrated pressure mechanism as the Tilt Back Pressure Tower. The Lightning Viewer also has a "hinge" mechanism that allows the user to tilt back the pressure device back to 60 degrees and clean the crystal with ease.

Swap-Top Modules

Multi-Reflection HATR Swap-Top Module

In 1986, Thermo Spectra-Tech patented the crystal design used in the Multi-Reflection Horizontal ATR Swap-Top module. You can choose from a variety of crystals depending on your application. The base module includes one (1) 45° Zinc Selenide (ZnSe) crystal in either a flat configuration for solids, or a trough configuration for liquids. A combo unit with two (2) crystals, flat and trough, is also available. Other crystal materials are available, including Silicon (Si) and Germanium (Ge).

Features

Multi-reflection flat and trough crystal options

ZnSe, Ge and Si crystals (all 45 degree incidence)

No alignment needed

Applications

- Liquids
- Solids
- Pastes
- Soft, compressible powders

The expected throughput of the Multi-Reflection Horizontal ATR Swap-Top module will vary with respect to the crystal material chosen. (see page 19 for crystal percentages)

Actual throughput may vary as a function of your spectrometer's source collection and detector foreoptics.

SpeculATR Swap-Top Module

The SpeculATR Swap-Top module offers single-reflection ATR combined with specular reflectance. This module provides routine single-reflection ATR spectroscopy for liquids or solids, and also 45° specular reflectance measurements. The Swap-Top module has the dual-technique flexibility, offering single-reflection HATR and specular reflectance in one accessory. The base unit includes two (2) Zinc Selenide (ZnSe) crystal assemblies, one for liquids, and one for solids. Replacement crystals cost less than one third the cost of a traditional ATR prism. Other crystal materials are available, including Silicon (Si) and Germanium (Ge).

Features

Dual purpose accessory
Single-reflection ATR 45 degree incidence
Pinned in place Fresnel ATR crystal
Low replacement cost crystal
ZnSe, Ge and Si crystals
45 degree specular reflectance
7 and 13mm masks

Applications

- Biological fluids
- Neat solvents
- Aqueous samples
- Quality control analysis
- Strong infrared absorbers

The expected throughput of the SpeculATR Swap-Top module will vary with respect to the crystal material chosen. (see page 29 for crystal percentages)

Actual throughput may vary as a function of your spectrometer's source collection and detector foreoptics.

Swap-Top Modules

CPC Diffuse Swap-Top Module

The CPC Diffuse Swap-Top module enhances diffuse reflection with CPC technology. Diffuse reflection is one of the most popular sampling techniques used today. The CPC diffuse design makes analysis easy and reliable. A novel optical element called a compound parabolic concentrator (CPC) both directs energy to your sample and collects the reflected energy. It is insensitive to sample height and sample morphology making it possible to obtain great results from samples that would foil older designs. The CPC design also minimizes unwanted specular bands from the final sample spectra.

Features

Downward looking CPC design

Less sensitive to particle morphology

Minimizes specular contamination

Easy to use sample slide

Applications

- Powders
- Organics
- Intractable solids

The expected throughput of the CPC Diffuse when using KBr, should be in the neighborhood of 3% of the open beam energy at 2000 cm-1, and 13% when using an alignment mirror.

Actual throughput may vary as a function of your spectrometer's source collection and detector foreoptics.

Transmission Swap-Top Module

The Transmission Swap-Top module greatly expands the utility of the Foundation Series by allowing you to make infrared transmission measurements with ease and speed. The Transmission Swap-Top eliminates the atmospheric water vapor and carbon dioxide that can obscure peaks of interest and complicate spectral subtractions. The Transmission Swap-Top substantially reduces the purge time per analysis by 80%. No longer will you have to remove your accessory to analyze KBr pellets, mulls or smears. The module will support a variety of infrared transmission cells and infrared cards.

Features

Optimizes purge conditions

Removable for easy cleaning

Rapid application change without losing purge

Applications

- Liquids
- Solids

Swap-Top Modules

Endurance Swap-Top Module

The Endurance Swap-Top expands the Foundation Series accessories already-wide range of capabilities. Utilizing diamond technology, the Endurance Swap-Top will give you the ability to run the samples that were previously impossible to run with traditional ATR accessories. The Endurance Swap-Top's diamond ATR crystal is virtually indestructible and can stand up to highly corrosive, caustic, intractable or abrasive samples that might damage other ATR crystal materials. The single reflection ATR accessory has a sampling area of 0.75mm diameter with effective pathlength of 2.03 micrometers at 1000 wavenumbers, assuming an average index of refraction for an organic sample of 1.5 and an angle of incidence of 45°.

Features

Single-reflection ATR Diamond crystal

ZnSe focusing element

Tilting pressure device for easy cleaning

Reproducible pressure applied to the sample

Collects infrared data on a wide variety of samples

Applications

Corrosive liquids

Highly abrasive materials

Single polymer beads

Paint chips

Highly caustic or acidic materials

Coated wires

Powders

The expected throughput of the Endurance, should be in the neighborhood of 12% of the open beam energy at 2000 cm-1.

Actual throughput may vary as a function of your spectrometer's source collection and detector foreoptics.

Pressure Device Options

Tilt Back Pressure Tower

The Tilt Back Pressure Tower.has a "hinge" mechanism, that allows the tower to tilt back to 60 degree angle, allowing you to clean the crystal with ease. It has a slip-clutch, calibrated pressure mechanism for consistent pressure on the sample.

Lightning Viewer

The Lightning Viewer is an optional pressure device that mounts on the Endurance. The Lightning Viewer provides 8.5X viewing capabilities. This magnification allows you to see the sample on the crystal, facilitating manipulation and accurate positioning of small samples. the Lighting Viewer has the same slip clutch, calibrated pressure mechanism as the Tilt Back Pressure Tower. The Lightning Viewer also has a "hinge" mechanism that allows the user to tilt back the pressure device back to 60 degrees and clean the crystal with ease.

Swap-Top Modules

FiberLink Swap-Top Module

Thermo Spectra-Tech's Foundation Series Fiber Optic kits offer sampling flexibility and diversity. FT-IR Fiber Optics give the user the unique ability to bring the sampling accessory to the sample. This is extremely useful when samples are at a remote location or when they are not the optimum shape or size to fit into the spectrometer's sample compartment. Foundation Fiber Optic kits use a FiberLink Swap-Top, which fits into the Foundation base. Prealigned fiber optic sampling probes (Needle Probes), available for ATR analysis and Specular Reflectance analysis, are connected to the FiberLink Swap-Top using fiber optic cables. Needle Probes are compatible with FT-IR spectrometers that have either dTGS or MCT detectors.

Features

Small sample probe diameter

Chalcogenide fibers

Very flexible fiber optic cables

Sample probes are interchangeable

Easy to clean, non-destructive sampling

Applications

Hazardous environments

Unusual sample sizes and shapes

Liquids and Solids

Acidic Samples

Restricted access sampling vessels

Skin analysis

The expected throughput of one fiber optic cable, when attached to the FiberLink Swap-Top module, should be in the neighborhood of 10% of the open beam energy at 4000 cm^{-1}. The expected throughput of an ATR Needle-Probe should be in the neighborhood of 1.30% of the open beam energy at 4000 cm^{-1}. The expected throughput of a Specular Needle-Probe should be in the neighborhood of 0.7% of the open beam energy at 4000 cm-1.

The actual throughput may vary as a function of your spectrometer's source collection and detector foreoptics.

Swap-Top Modules

Thunderdome Swap-Top Operation

Description

The Thunderdome is a unique single-reflection ATR that utilizes a spherical ATR crystal as the sampling surface. This unique spherical sampling surface provides “point-to-point” contact with the “pressure device” when analyzing solid samples. This point-to-point contact is ideal for analyzing hard, rigid, unyielding and difficult to analyze samples. The fail-safe pressure devices, the Tilt Back Pressure Tower and the Lightning Viewer, eliminate the risk of damage to the crystal surface, and reduce the need for tedious sample positioning.

The spherical configuration of the ATR produces a 2X reduction in the beam diameter. Concentrating the energy to a smaller spot size provides the ability to analyze even smaller samples, as compared to other single-reflection ATR accessories. Another important benefit of the smaller sampling area is the ability to exert more pressure on the sample, ensuring optimum sample-to-crystal contact. The active sampling area of the Thunderdome is approximately 5 mm. The Tilt Back Pressure Tower tip is 2 mm, the Lightning Viewer pressure device tip is 5 mm, essentially defining the practical sampling size. This small contact size permits the Thunderdome to very effectively analyze small samples such as single fibers, paint chips and polymer beads.

The Thunderdome utilizes a Germanium ATR crystal. Germanium is an extremely rugged ATR material and has a spectral range of 4000-675 cm-1. The Thunderdome is completely purgeable and pre-aligned, making it useful for both qualitative and quantitative analysis.

Tilt Back Pressure Tower

The Tilt Back Pressure Tower is an upgraded version of the Pressure Tower. The Tilt Back Pressure Tower has a “hinge” mechanism, that allows the tower to tilt back to a 60° angle, allowing users to clean the crystal with ease. It has a slip-clutch, calibrated pressure mechanism for consistent pressure on the sample. Two user interchangeable tips come standard with the pressure tower.

Lightning Viewer

The Lightning Viewer is an optional pressure device that mounts on the Thunderdome. The Lightning Viewer provides 8.5X viewing capabilities. This magnification allows you to see the sample on the crystal under magnification, facilitating manipulation and accurate positioning of small samples. The Lightning Viewer has the same slip-clutch, calibrated pressure mechanism as the Tilt Back Pressure Tower. The Lightning Viewer also has a “hinge” mechanism that allows the user to tilt the pressure device back to a 60° angle and clean the crystal with ease. The hinge mechanism will now be standard with the Tilt Back Pressure Tower and the Lightning Viewer.

Product Parts Descriptions

Optical Unit:	Contains the mirrors that direct the infrared beam through the sample onto the detector.
Liquid Holder:	To retain liquids for analysis
Tilt Back Pressure Tower:	Provides uniform contact between the sample and the ATR crystal. With calibrated pressure mechanism for consistent pressure on the sample.
Pressure Tips:	The Thunderdome now comes standard with two pressure tips to assure intimate contact with the crystal even with odd-shaped pellet samples. The standard tip is ideal for fibers, o-rings, paint chips, polymer sheets, and other flat solid samples. The concave tip is useful for polymer beads, small odd-shaped rigid samples, and powders.
Lightning Viewer:	Provides uniform contact between the sample and the ATR crystal while viewing the sample. With calibrated pressure mechanism for consistent pressure on the sample.

Thunderdome Swap-Top Operation

Tilt Back Pressure Tower

The acquisition of ATR spectra requires intimate contact between the ATR crystal and the sample. The Tilt Back Pressure Tower is designed to achieve optimum contact between solid samples of varying overall thickness and the crystal assembly.

Installing the Tilt Back Pressure Tower

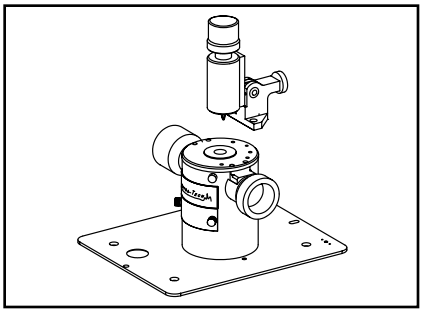

Install the Tilt Back Pressure Tower

If not previously installed, install the Tilt Back Pressure Tower.

Locate the mounting holes (and the 10/32 socket screws provided) for mounting the Tilt Back Pressure Tower assembly.

Align the mounting holes on the Tilt Back Pressure Tower with the holes on the Thunderdome's top plate.

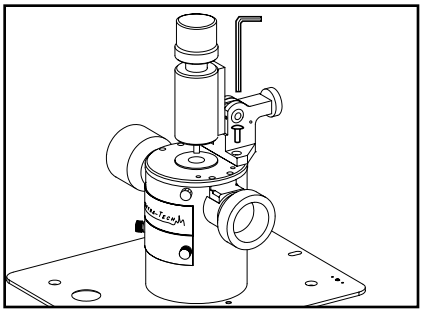

Secure the pressure device to the base unit

Secure the Tilt Back Pressure Tower assembly to the base unit using the mounting screws.

Tighten with the 3/32 hexkey provided.

Preparing the Pressure Tower for Sampling

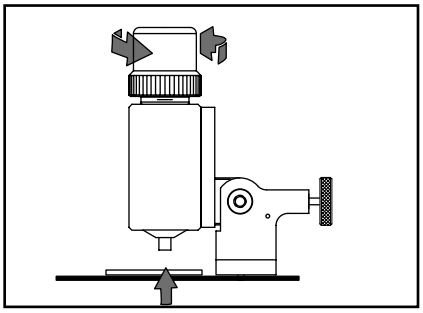

Release the pressure

Raise the pressure point tip up by rotating the pressure knob counter clockwise.

Stop rotating when the pressure point tip stops moving.

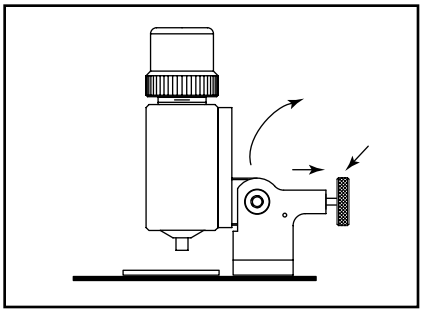

Disengage the release mechanism

Turn and pull the silver release knob at the back of the Tilt Back Pressure Tower.

Once the release mechanism is disengaged, tilt the pressure device out of the way. Tilt back until the silver release knob engages in the back position.

Thunderdome Swap-Top Operation

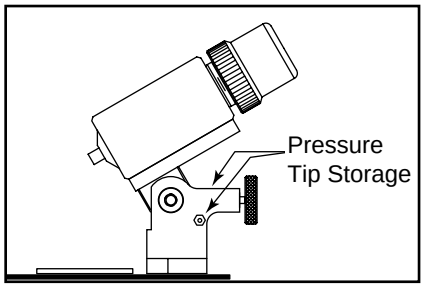

Choose the Pressure Tip

Determine which tip is best suited for the application.

Unscrew the appropriate tip from its convenient storage hole located on either side of the base of the tilt back mechanism.

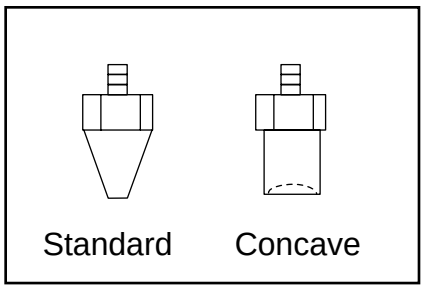

The Pressure Tips

The standard tip is ideal for fibers, o-rings, paint chips, polymers sheets and other flat solid samples.

The concave tip is useful for polymer beads, small odd shaped rigid samples and powders.

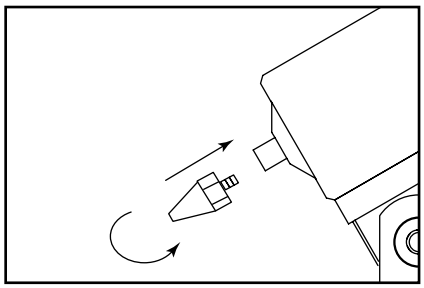

Install the Pressure Tips

Install the chosen tip by screwing it clockwise until finger tight. Do not overtighten. It is not necessary to use any tools for this step.

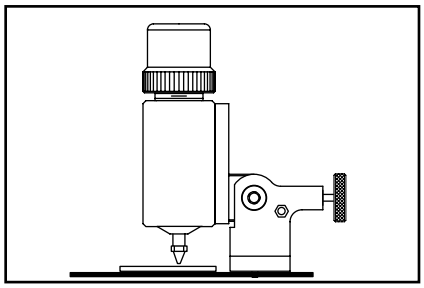

Reposition the pressure tower

While holding the pressure tower pull the silver knob out and move the tower to the upright position. The knob will lock in place automatically.

Cleaning while using the Tilt Back Pressure Tower

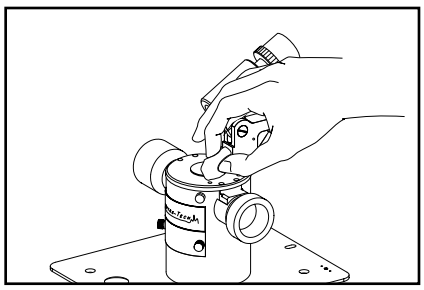

Clean the crystal

Tilt back the pressure device. The crystal can be cleaned with water or an appropriate solvent.

The crystal must be cleaned using an undyed, unscented tissue, cotton balls or cotton swabs moistened with solvent.

Dry the crystal.

Thunderdome Swap-Top Operation

Caution: Do not let the pressure point fall onto the crystal. Be certain the knob is fully released before moving the pressure device.

Note: The Tilt Back Pressure Tower and Lightning Viewer are fail-safe mechanisms which greatly reduce the risk of damage to the crystal. When using the Tilt Back Pressure Tower and Lightning Viewer, please observe the following precautions:

Do not use the Tilt Back Pressure Tower and Lightning Viewer to crush samples. Do not apply pressure to the crystal for extended periods of time as cracking of the measurement crystal can occur.

Lightning Viewer

Installing the Lightning Viewer

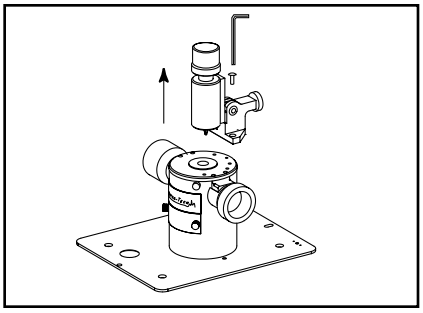

Remove the Tilt Back Pressure Tower

With a 3/32 hexkey remove the two screws that fasten the Tilt Back Pressure Tower.

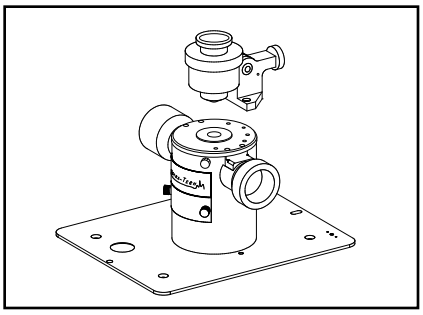

Secure the Lightning Viewer

The Lightning Viewer is secured by two 10-32 low head screws.

Tighten with the 3/32 hexkey.

Preparing the Lightning Viewer for Sampling

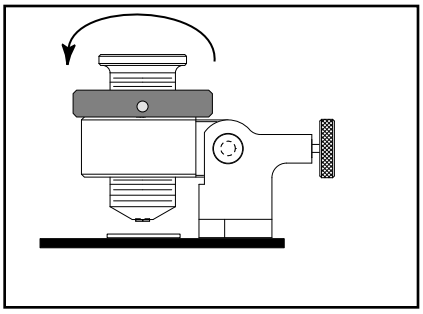

Release the pressure

Raise the pressure point up by rotating the pressure knob counter clockwise.

Stop rotating when the pressure point stops moving.

Thunderdome Swap-Top Operation

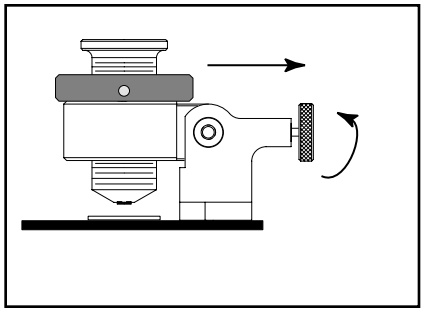

Disengage the release mechanism

Turn and pull the silver release knob at the back of the pressure device.

Cleaning while using the Lightning Viewer

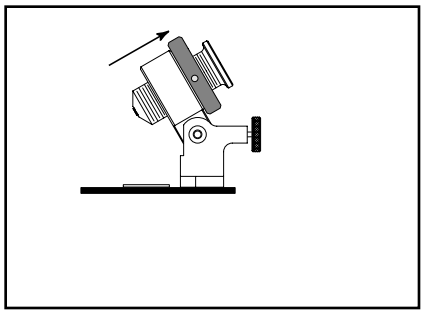

Tilt back the Lightning Viewer

Once the release mechanism is disengaged, tilt the pressure device out of the way. Tilt back until the silver release knob engages in the back position.

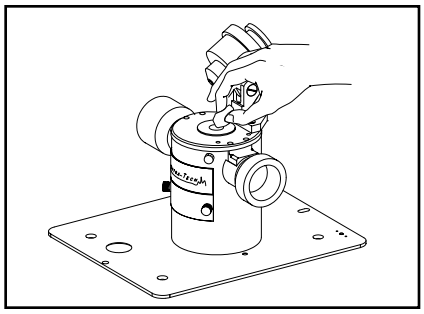

Clean the crystal

Release and tilt back the pressure device.

The crystal can by cleaned with water or an appropriate solvent.

The crystal must be cleaned using an undyed unscented tissue, cotton balls or cotton swabs moistened with solvent.

Dry the crystal.

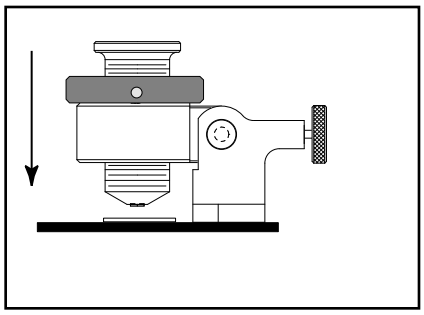

Reposition the Lightning Viewer

While holding the Lightning Viewer pull the silver release knob out and move the viewer to the upright position. The knob will lock in place automatically.

Caution: Do not let the pressure point fall onto the crystal. Be certain the knob is fully released before moving the pressure device.

Thunderdome Swap-Top Operation

Solids & Films

Note: For solids & film samples observe the following precautions:

- For best results, the sample should cover the crystal surface under the pressure point tip.
- When analyzing films and irregular samples, use of a pressure device is recommended to maintain even and intimate contact between the sample and the crystal.
- Make sure that your sample will not attack the crystal material.

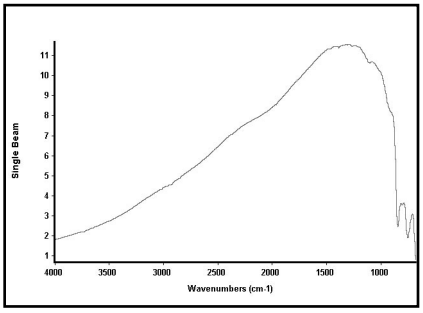

Acquire a background spectrum

Acquire a background single-beam spectrum with the clean crystal sampling plate in place.

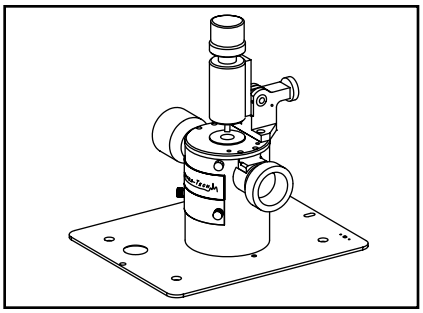

Place the sample on the crystal sampling surface

Place your sample on the crystal sampling surface observing the precautions listed on page 14.

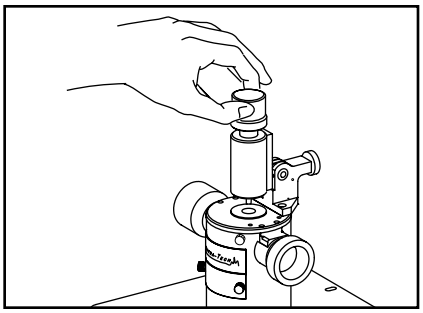

Apply pressure

Turn the knurled ring on the pressure device until it begins to slip and you hear the audible click. At this point there is maximum pressure applied to the sample. Note, because the pressure device is a fail-safe device, the slippage you experience will prevent damage to the crystal.

Watch to see that the sample remains centered under the tip.

Thunderdome Swap-Top Operation

Solids & Films

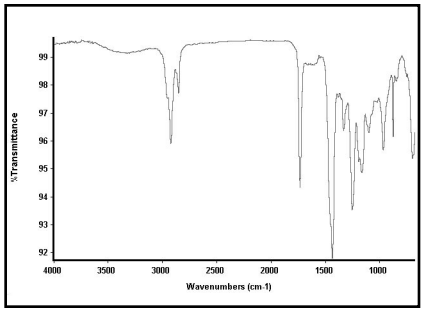

Acquire a sample spectrum

Acquire a sample single-beam spectrum.

Ratio it against the previously acquired reference single-beam spectrum.

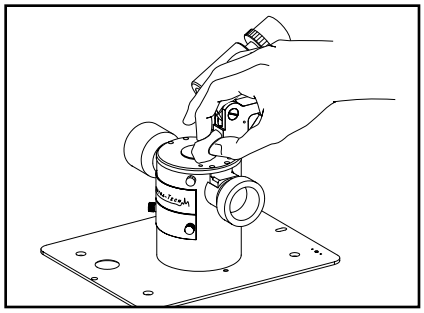

Clean the crystal

Release and tilt back the pressure device.

Clean the sample off the crystal using a cotton ball or cotton swab moistened with an appropriate solvent.

Liquids

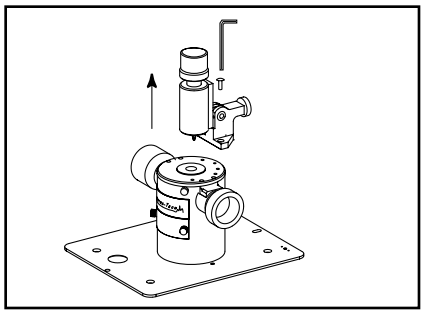

Remove the pressure device

Place the Thunderdome accessory on a horizontal surface (table top).

Be sure the pressure device is not in contact with the crystal surface.

Loosen and remove the two 10-32 low head screws which hold the pressure device to the optical unit.

Remove the pressure device from the optical unit.

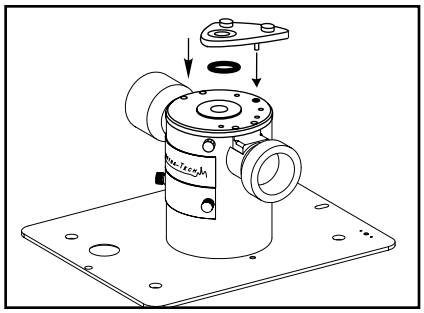

Place the liquid holder on the optical unit

Align the pin on the liquid holder to the pin hole on the surface plate.

Be sure the O-Ring is in place in the O-Ring groove located on the underside of the liquid holder plate.

Tighten the thumbscrews by hand. Do not use a screwdriver.

Note: Be careful not to over tighten the thumbscrews!

Liquids

WARNING: The standard O-Ring is viton. Viton has excellent chemical resistivity to petroleum products and solvents. It is not recommended for exposure to ketones, amines, low molecular weight esters, ethers, nitrohydrocarbons, hot hydrofluoric or chlorosulfonic acids. Please contact Thermo Spectra-Tech for alternative O-Ring materials.

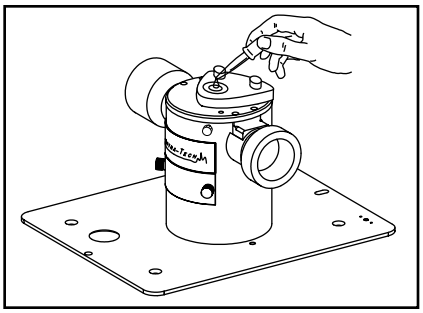

Fill the holder with liquid

Do not over fill the holder.

The crystal surface needs only to be covered by a thin film of liquid.

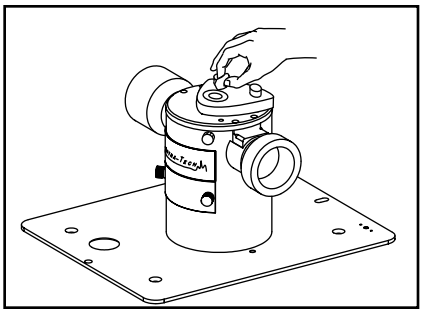

Clean the crystal

Use a tissue, a cotton swab, or a cotton ball moistened with an appropriate solvent and gently rub in a circular motion.

Note: After use, sample can build up and around the O-Ring seal. The O-Ring is outside the active infrared area and should not be detected. If erroneous sample measurements occur, remove the liquid holder and clean the O-Ring and O-Ring groove.

Remove the liquid holder

Unscrew the two thumbscrews and remove the liquid holders.

Clean the crystal after removing the holder.

Install the pressure device.

Multi-Reflection HATR Swap-Top Operation

Description

The Foundation Series Multi-Reflection Horizontal Attenuated Total Reflectance (HATR) Kit contains an ATR accessory that simplifies the FT-IR analysis of liquids, pastes, gels, films and powders. The horizontal sampling surface permits the convenient acquisition of infrared spectra with little or no sample preparation. By using the Foundation Series Multi-Reflection HATR even samples containing strongly absorbing components can be readily analyzed.

Product Parts Descriptions

Optical Unit:	Contains the mirrors that direct the infrared beam through the sample onto the detector. It can be used with either the trough or flat sampling plate.
Trough Plate:	Teflon coated aluminum plate with an ATR crystal "well". It is used for materials that need to be contained such as pastes, gels, powders, viscous smears and liquids.
Flat Plate:	Teflon coated aluminum plate in which the surface of the mounted ATR crystal sits slightly proud with the surface of the plate for samples such as films and non-viscous liquids.
MiniGrip:	Provides uniform contact between the sample and the ATR crystal and can be used with both types of sampling plates. The MiniGrip mounts onto the top plate with two (2) screws.
Powder Press:	For use with the trough plate when analyzing powders to obtain a high degree of uniform pressure.
Volatile Liquid Cover:	For use with volatile liquids to prevent evaporation of the sample during analysis.

Multi-Reflection HATR Swap-Top Operation

MiniGrip

The acquisition of ATR spectra requires intimate contact between the ATR crystal and the sample. The MiniGrip is designed to achieve optimum contact between samples of varying overall thickness and the crystal assembly. Initial sample contact with the crystal is achieved by adjusting the height adjustment knob. Optimum optical contact is achieved through adjustments to the pressure adjustment knob.

Installing the MiniGrip

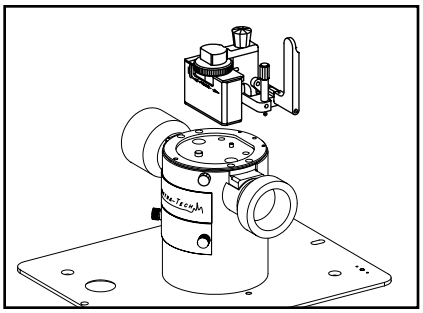

Install the MiniGrip on the Multi-Reflection HATR

Locate the 4-40 mounting holes (and the screws provided) for mounting the MiniGrip assembly.

Align the mounting holes on the MiniGrip with the holes on the HATR module.

Secure the MiniGrip to the Horizontal ATR using the mounting screws.

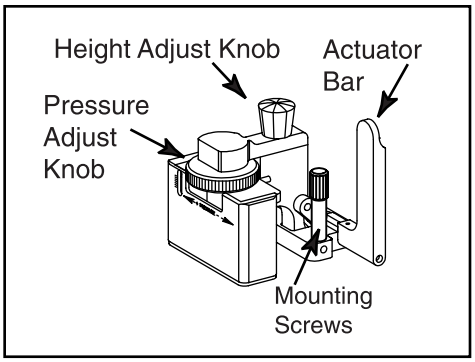

Adjust the MiniGrip

There are two adjustments on the MiniGrip, one for the height of sample and one for pressure.

Note: When using the MiniGrip observe the following precautions:

- **Excessive pressure can crack and permanently damage the sampling crystal. Do not use the MiniGrip to crush the sample. Do not apply pressure to the crystal for extended periods of time as cracking of the measurement crystal can occur.**
- **The sampling crystals of the Multi-Reflection HATRs are delicate optical components. Apply pressure gradually to prevent excessive pressure which may damage the crystal.**

Multi-Reflection HATR Swap-Top Operation

Using the MiniGrip

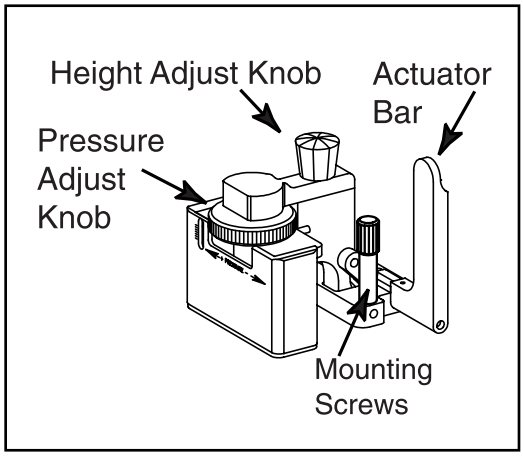

Raise the compression pad

Move the actuator bar back to raise the compression pad.

Adjust the height

Use the height adjust knob to accommodate the sample thickness.

Adjust the pressure

Release the clamp and make a small incremental increase in the pressure adjust knob setting. If the spectrum is too weak, release the clamp and further tighten the pressure adjust knob.

Caution: If you find considerable force is necessary to overcome the resistance, STOP!! Reconsider this technique for the sample.

The Minigrip should always be in the unclamped position when making adjustments.

Installing Sampling Plates

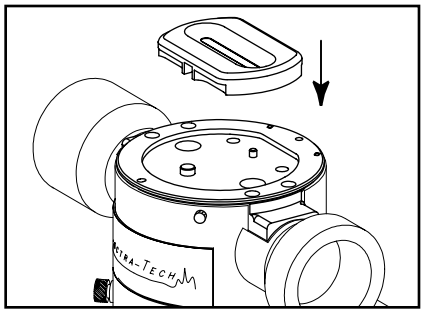

Install the sampling plate

Place the sampling plate onto the optical unit from the front. The larger positioning pin should fit snugly into the notch cut out of the sampling plate.

Record the energy throughput

Set the FT-IR spectrometer to monitor the energy throughput.

Record the energy throughput with no sample present.

Save this data for future reference.

The following table serves as a guide for monitoring the open beam energy at 2000 cm-1.

Actual throughput may vary as a function of your spectrometer's source collection and detector foreoptics.

45° Crystal	Percentage
ZnSe	15%
Ge	7%
Si	8%

Sample Preparation

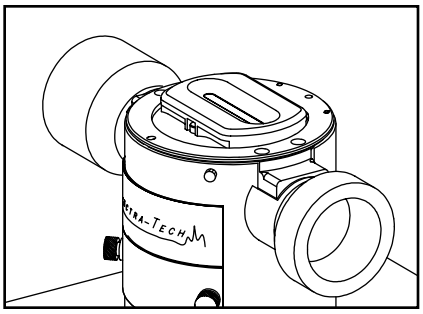

Acquire a background spectrum

Place the (empty) trough sampling plate on the base optical unit.

Acquire a background spectrum with the empty sampling plate.

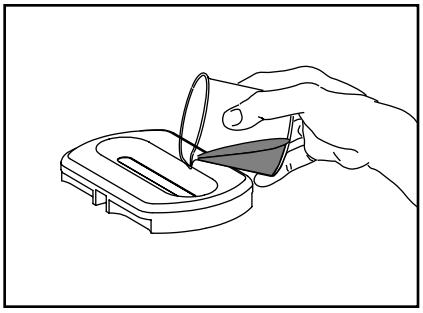

Pour the liquid into the trough plate

Liquids are easily analyzed by simply pouring the sample into a trough sampling plate. If the liquid is volatile, place the volatiles cover over the sample after placing the sample in the trough.

Caution: Make sure that your sample will not attack the crystal material (see below).

Caution: See note on cleaning solvents on page 23.

NOTE: For **liquid samples** observe the following precautions:

- Make sure that your sample will not attack the crystal material.
- If your material is messy or there is a high probability of spilling the sample, remove the sampling plate from the base assembly before placing the sample on the plate.
- For best results, the sample should cover the entire crystal surface.
- Be careful not to thermally shock the crystal. Applying a very hot or very cold sample directly to the crystal may cause the crystal to crack.

Note: The background and sample spectra MUST be acquired using the same crystal.

Multi-Reflection HATR Swap-Top Operation

Liquids & Pastes

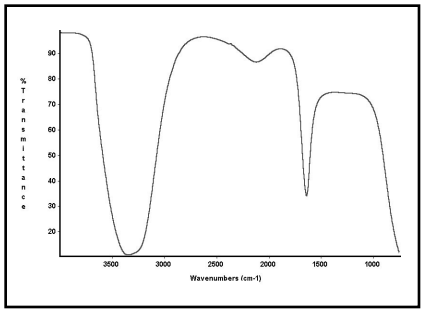

Acquire the sample spectrum

Acquire the sample spectrum.

Ratio it against the previously acquired background spectrum.

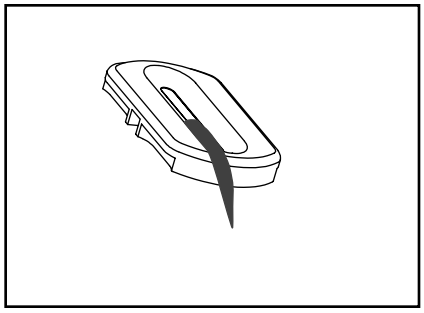

Clean the sampling surface

Remove the sampling plate.

Clean the crystal by pouring off the sample or rinsing the sample off with an appropriate solvent. Use a cotton swab moistened with the solvent to clean any remaining sample from the crystal surface.

Note: The crystal may be cleaned with water if this is appropriate, however, caution must be taken regarding very hot water. Rapid temperature changes may result in a cracked crystal. Other common non-chlorinated solvents may be used for cleaning purposes.

Powders

Note: For powder samples observe the following precautions:

- The sample should consist of a fine particle size, soft, compressible powder.
- For best results, the sample should cover the entire crystal surface.
- When analyzing powders, use of the powder press and MiniGrip is recommended to maintain even and intimate contact between the sample and the crystal.
- Make sure that your sample will not attack the crystal material.

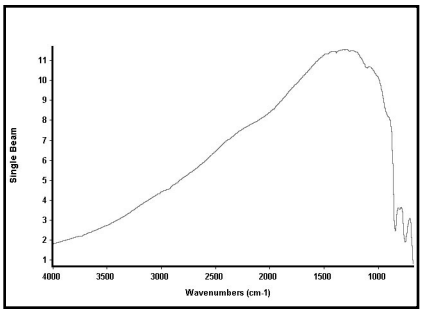

Acquire a background spectrum

Install the MiniGrip (see installation instructions on page 20).

Place the (empty) trough sampling plate on the base optical unit.

Acquire a background spectrum with the empty sampling plate.

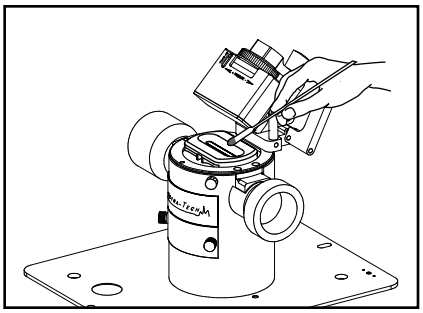

Place the sample on the sampling surface

Spread the powder in the trough sampling plate so that an even layer covers the entire crystal surface.

Place the powder press on top of the powder.

Lock down the MiniGrip to ensure intimate contact between the crystal and the powder.

Caution: Adjust the MiniGrip slowly. Too much pressure may cause the crystal to crack.

The pressure plate should **not** contact the crystal unevenly...

RIGHT

...instead, it should make even contact with the sample crystal.

WRONG

Using the MiniGrip

Using the actuating lever, clamp the MiniGrip down on the sample.

Make sure that the pressure plate contacts the crystal evenly.

Multi-Reflection HATR Swap-Top Operation

Powders

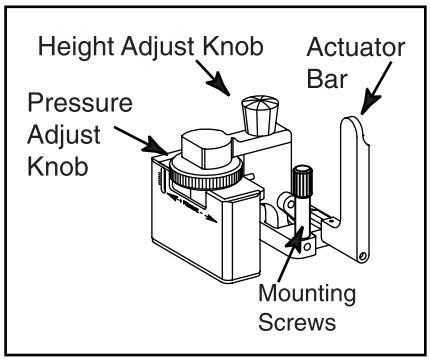

Optimize the MiniGrip

Obtain a sample spectrum.

Release the clamp.

Increase the pressure using the pressure adjustment knob.

Reclamp and repeat the measurement.

Continue increasing the pressure until no noticeable change in the spectrum occurs (or until a fair amount of force is required to press the Minigrip lever down - see the Note on Page 20).

This will be the optimal setting. Record the value for future use.

Caution: Powder samples produce weak spectra even with maximum pressure, be careful not to break the crystal by applying too much pressure. Samples must be compressible. Do not attempt to analyze hard plastics. The Endurance, Thunderdome or the CPC Diffuse accessory would be more appropriate for the analysis of hard samples.

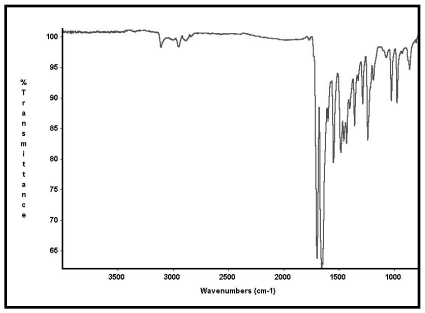

Acquire the sample spectrum

Acquire the sample spectrum.

Ratio it against the previously acquired background spectrum.

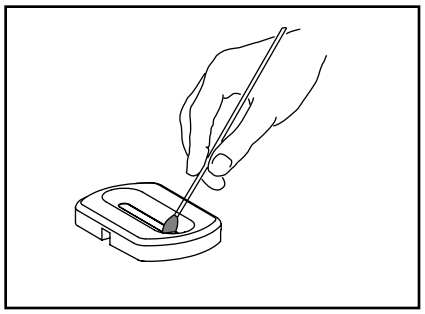

Clean the crystal

Release the Minigrip.

Remove the trough sampling plate.

Most powder samples can be brushed out of the trough. Any remaining sample can be cleaned off the crystal using a cotton swab moistened with an appropriate solvent.

Caution: Avoid the use of very hot water. Rapid temperature changes may result in a cracked crystal. Do not use Chlorinated solvents, see notes page 23.

Films

Note: For film samples observe the following precautions:

- For best results, the sample should cover the entire crystal surface.
- When analyzing films and irregular samples, use of the Minigrip is recommended to maintain even and intimate contact between the sample and the crystal.
- Make sure that your sample will not attack the crystal material.
- Irregular samples can apply uneven pressure to the crystal causing it to break if too much pressure is applied.

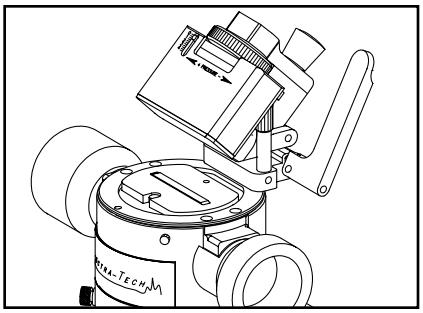

Install the MiniGrip and flat plate

Install the Minigrip (see installation instructions page 20).

Place the flat sampling plate on the base optical unit.

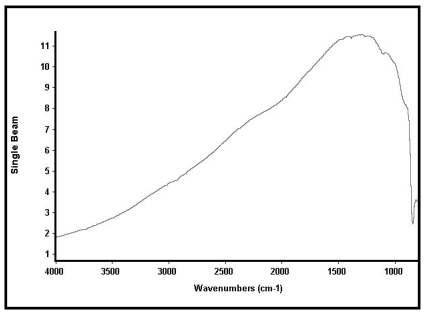

Acquire a background spectrum

Acquire a background spectrum with the empty sampling plate.

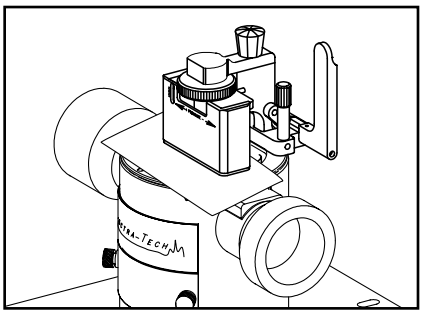

Place the sample on the sampling surface

Place the sample on the crystal so that it covers the entire crystal surface.

Lock down the MiniGrip (see note on page 20) to ensure intimate contact between the crystal and the film.

Multi-Reflection HATR Swap-Top Operation

Films

Note: When using the MiniGrip observe the following precautions:

- Excessive pressure can crack and permanently damage the sampling crystal. Do not use the MiniGrip to crush the sample. Do not apply pressure to the crystal for extended periods of time as cracking of the measurement crystal can occur.
- The sampling crystals of the Multi-Reflection HATRs are delicate optical components. Apply pressure gradually to prevent excessive pressure which may damage the crystal.

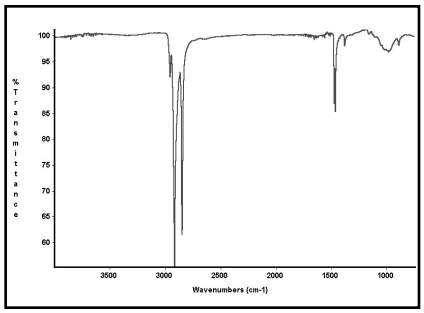

Acquire the sample spectrum

Acquire the sample spectrum.

Ratio it against the previously acquired background spectrum.

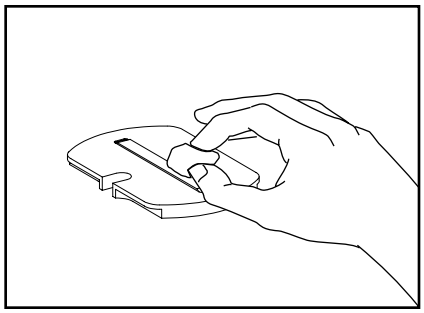

Clean the sampling surface

Release the MiniGrip and remove the sample and sampling plate.

Use a cotton swab moistened with an appropriate solvent to clean any remaining sample from the crystal surface.

SpeculATR Swap-Top Operation

Description

The Foundation Series SpeculATR accessory is designed to be extremely easy to operate and to offer reproducible data. The SpeculATR is a dual technique accessory with single reflection ATR and specular reflectance.

The SpeculATR 45° Specular Reflectance Accessory is a simple and easy-to-use accessory for the analysis of coatings on surfaces. Samples are placed horizontally on the top surface of the accessory and analyzed at a fixed 45° angle of incidence which ensures repeatability. The horizontal sampling surface not only makes sample loading and removal easy, but it also allows larger samples to be analyzed. In addition, two masks are included which enable you to analyze small areas or isolate areas of interest on larger samples.

The SpeculATR includes a pressure device (the MiniGrip) used to provide the uniform contact between the sample and the ATR crystal needed for reproducible results (when working with solids, films and powders). The MiniGrip should be used with the sample plate to assure that consistent contact is achieved between the sample and the crystal. The MiniGrip mounts onto the top plate of the base accessory by two screws. The MiniGrip should also be used with compressible powders that may not easily make contact with the crystal surface.

Product Parts Descriptions

Optical Unit:	Contains the mirrors that direct the infrared beam through the sample onto the detector. It can be used with either the trough or flat sampling plate.
Trough Plate:	Stainless steel plate with an ATR crystal "well". It is used for materials that need to be contained such as pastes, gels, powders, viscous smears and liquids.
Flat Plate:	Stainless steel plate in which the surface of the mounted ATR crystal sits slightly proud with the surface of the plate for samples such as films and non-viscous liquids.
MiniGrip:	Provides uniform contact between the sample and the ATR crystal and can be used with both types of sampling plates. The MiniGrip mounts onto the top plate with two (2) screws.
Reference Mirror (gold):	For taking a background for specular reflectance
7 mm Mask:	For masking samples for specular reflectance
13 mm Mask:	For masking samples for specular reflectance

SpeculATR Swap-Top Operation

MiniGrip

Installing the MiniGrip

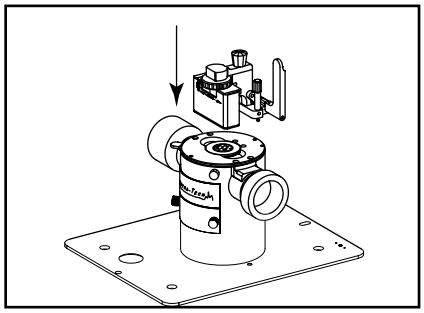

Install the MiniGrip on the SpeculATR

Locate the 4-40 mounting holes (and the screws provided) for mounting the MiniGrip assembly.

Align the mounting holes on the MiniGrip with the holes on the SpeculATR module.

Secure the MiniGrip to the SpeculATR using the mounting screws.

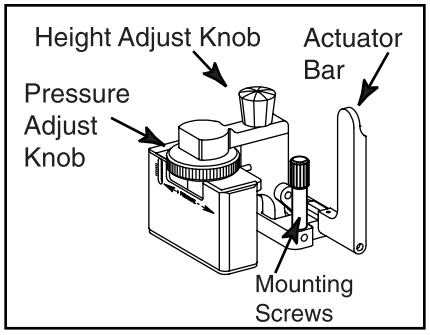

Adjust the MiniGrip

There are two adjustments on the MiniGrip, one for the height of sample and one for pressure.

Note: When using the MiniGrip observe the following precautions:

- Excessive pressures can crack and permanently damage the sampling crystal. Do not use the MiniGrip to crush the sample. Do not apply pressure to the crystal for extended periods of time as cracking of the measurement crystal can occur.
- The sampling crystals of the SpeculATR HATRs are delicate optical components. Apply pressure gradually to prevent excessive pressure which may damage the crystal.

Caution: If you find considerable force is necessary to overcome the resistance, STOP!! Reconsider this technique for the sample.

Note: The MiniGrip should always be in the unclamped position when making adjustments!

Note: Refer to page 20 for using the MiniGrip.

SpeculATR Swap-Top Operation

Liquids

Note: For liquid samples observe the following precautions:

- Make sure that your sample will not attack the crystal material.
- For best results, the sample should cover the entire crystal surface.
- Be careful not to thermally shock the crystal. Applying a very hot or very cold sample directly to the crystal may cause the crystal to crack.
- When analyzing volatile materials, you should use the volatile solvent cover to prevent sample evaporation during the analysis.
- Clean the crystal surface with a soft material such as a cotton swab to avoid scratching the crystal surface.

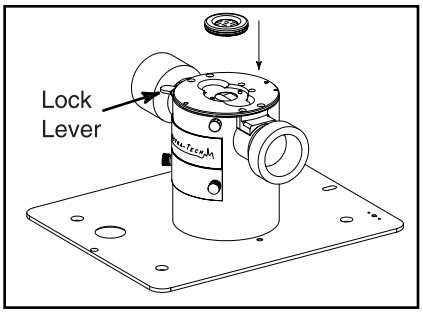

Install the trough plate

Place the sampling plate on the top of the SpeculATR by pushing on the lock lever and locating the trough plate on the pins.

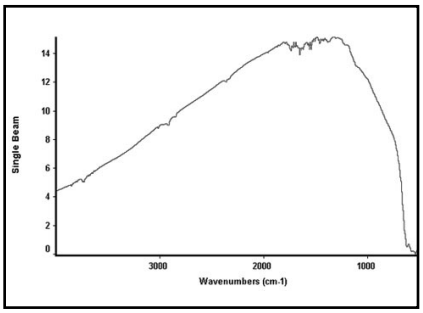

Acquire a background spectrum

Acquire a background single-beam spectrum with the clean crystal sampling plate in place.

Note: The background and sample spectra MUST be acquired using the same crystal.

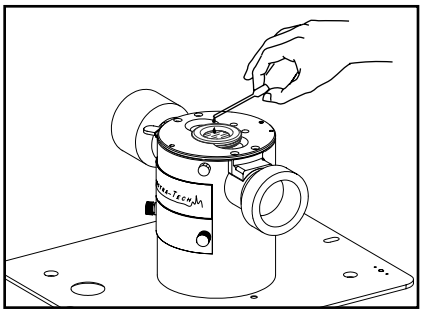

Place the sample on the plate

Place your sample on the crystal *observing the precautions listed above.*

Note: It is only necessary for the sample to cover the crystal surface. A drop of liquid in the center of the crystal is all that is necessary to obtain maximum sensitivity.

SpeculATR Swap-Top Operation

Liquids

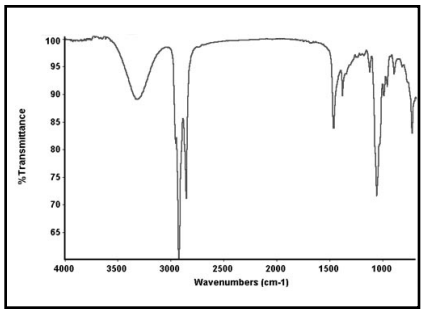

Acquire a sample spectrum

Acquire a sample single-beam spectrum.

Ratio it against the previously acquired reference single-beam spectrum.

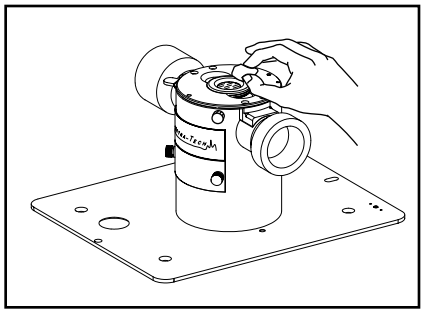

Clean the crystal

Clean the sample off the crystal using a cotton ball moistened with an appropriate solvent.

If necessary, remove the entire plate.

Caution: Avoid immersion in solvents as this can affect the epoxy used to hold the crystal to the holder. Do not use an ultrasonic bath to clean the crystal. See page 30.

The following table serves as a guide for monitoring the open beam energy at 2000 cm-1.

Actual throughput may vary as a function of your spectrometer's source collection and detector foreoptics.

45° Crystal	Percentage
ZnSe	23%
Ge	13%
Si	15%

Powders

Note: For powder samples observe the following precautions:

- The sample should consist of a fine particle size, soft, compressible powder.
- For best results, the sample should cover the entire crystal surface.
- When analyzing powders, the MiniGrip is recommended to maintain even and intimate contact between the sample and the crystal.
- Make sure that your sample will not attack the crystal material.

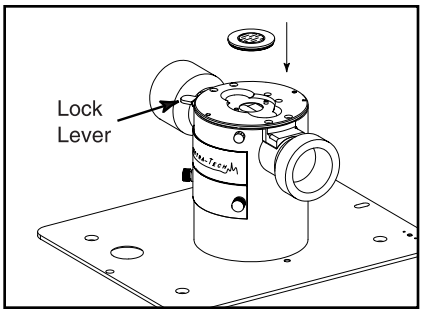

Install the flat plate

Place the flat plate on the SpeculATR by pushing on the lock lever and locating the trough plate on the pins.

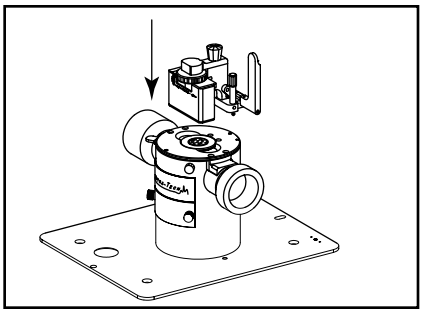

Install the MiniGrip

Follow installation procedure on page 20.

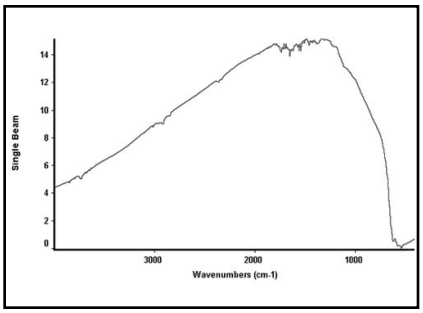

Acquire a background spectrum

Acquire a background single-beam spectrum with the clean crystal sample plate in place.

Powders

Note: When using the MiniGrip observe the following precautions:

- Excessive pressure can crack and permanently damage the sampling crystal. Do not use the MiniGrip to crush sample. Do not apply pressure to the crystal for extended periods of time as cracking of the measurement crystal can occur.
- The sampling crystals of the SpeculATR are delicate optical components. Apply pressure gradually to prevent excessive pressure which may damage the crystal.

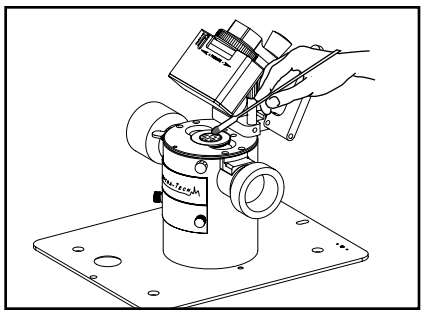

Place the sample on the sampling surface

Spread the powder on the flat sampling plate so that an even layer covers the entire crystal surface.

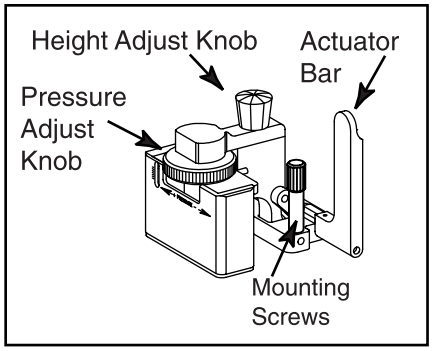

Use the MiniGrip to compress the sample

Using the actuator bar, clamp the MiniGrip down on the sample.

Lock down the MiniGrip to ensure intimate contact between the crystal and the powder.

Optimize the MiniGrip

Obtain a sample spectrum.

Release the clamp.

Increase the pressure using the pressure adjust knob.

Reclamp and repeat the measurement.

Continue increasing the pressure until no noticeable change in the spectrum occurs (or until a fair amount of force is required to press the MiniGrip actuator bar down - see Note on page 20).

This will be the optimal setting. Record the value for future use.

Caution: Powder samples produce weak spectra even with maximum pressure, be careful not to break the crystal by applying too much pressure. Samples must be compressible. Do not attempt to analyze hard plastics. The Endurance, Thunderdome or the CPC Diffuse Swap-Top would be more appropriate for the analysis of hard samples. Also using the Si-Carb sampler and the CPC Diffuse Swap-Top module.

Powders

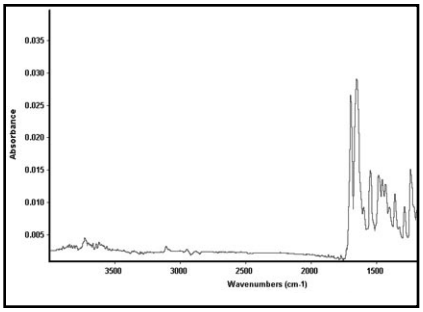

Acquire a sample spectrum

Acquire a sample single-beam spectrum.

Ratio it against the previously acquired reference single-beam spectrum.

Note: The background and sample spectra MUST be acquired using the same crystal.

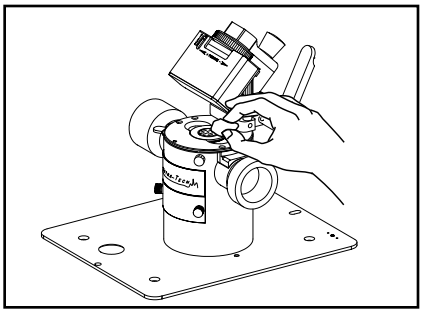

Clean the crystal

Release the MiniGrip.

Remove the entire sample plate.

Most powder samples can be brushed off the sampling plate. Any remaining sample can be cleaned off the crystal using a cotton swab moistened with an appropriate solvent.

Caution: Avoid immersion in solvents as this can affect the epoxy used to hold the crystal to the holder. Do not use an ultrasonic bath to clean the crystal.

SpeculATR Swap-Top Operation

Films

Note: For films observe the following precautions:

- For best results, the sample should cover the entire crystal surface.
- When analyzing films and irregular samples, use of the MiniGrip is recommended to maintain even and intimate contact between the sample and the crystal.
- Make sure that your sample will not attack the crystal material.
- Irregular samples can apply uneven pressure to the crystal causing it to break if too much pressure is applied.

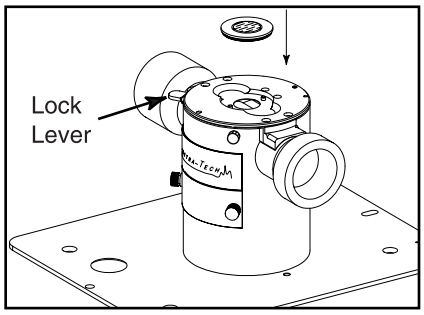

Install the flat sample plate

Place the flat sample plate on the top of the SpeculATR. Pushing the Lock Lever and be careful to properly align the pins on the SpeculATR with the holes on the plate. Release the Lock Lever.

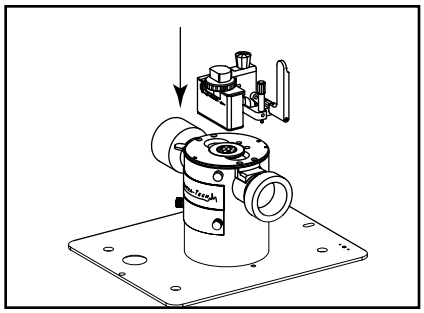

Install the MiniGrip

Follow installation procedure on page 20.

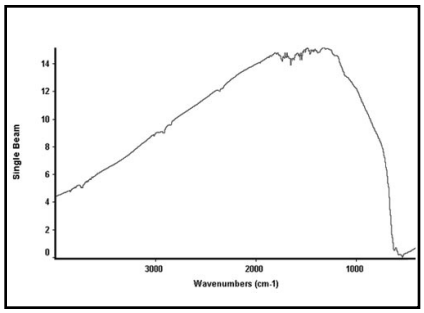

Acquire a background spectrum

Acquire a background single-beam spectrum with the clean sample plate in place.

Films

Note: When using the MiniGrip observe the following precautions:

- Excessive pressure can crack and permanently damage the sampling crystal. Do not use the MiniGrip to crush the sample. Do not apply pressure to the crystal for extended periods of time as cracking of the measurement crystal can occur.
- The sampling crystals of the SpeculATR are delicate optical components. Apply pressure gradually to prevent excessive pressure which may damage the crystal.

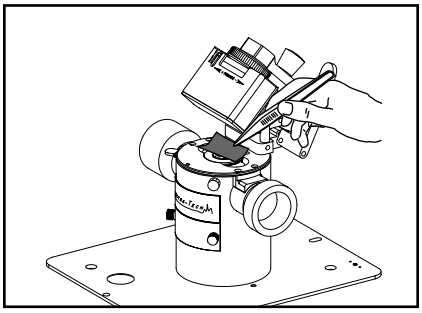

Place the sample on the crystal surface

Place your sample on the crystal so it covers the entire sampling surface.

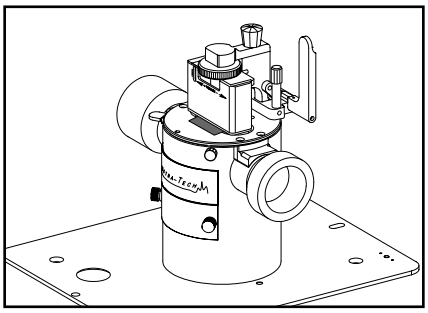

Using the MiniGrip

Lock down the MiniGrip (see the note on page 20) to ensure intimate contact between the crystal and the film.Using the actuator bar, clamp the MiniGrip down on the sample.

Make sure that the pressure plate contacts the crystal evenly.

Adjust the pressure using the pressure adjustment knob.

For optimization see page 21.

SpeculATR Swap-Top Operation

Films

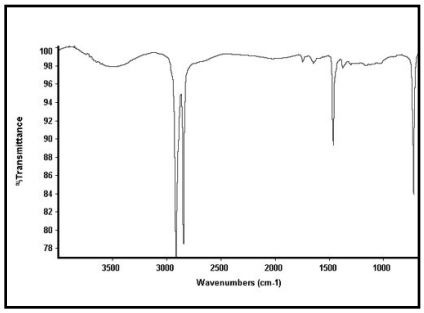

Acquire a sample spectrum

Acquire a sample single-beam spectrum.

Ratio it against the previously acquired reference single-beam spectrum.

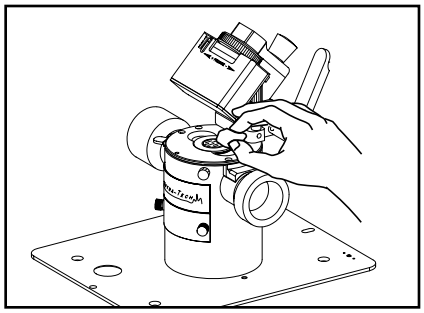

Clean the crystal

Release the Mini-Grip.

Remove the film from the sample plate.

Clean the sample off the crystal using a cotton swab moistened with an appropriate solvent.

Caution: Avoid immersion in solvents as this can affect the epoxy used to hold the crystal to the holder. Do not use an ultrasonic bath to clean the crystal.

Specular Reflectance

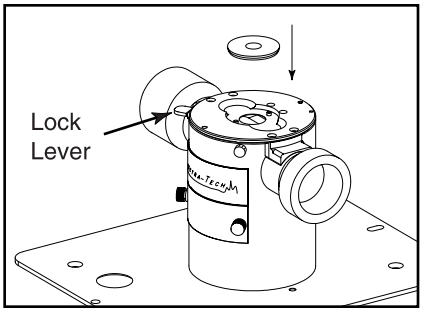

Place the mask

Select the 7 or 13 mm mask and place the flat sample plate on the top of the SpeculATR. Push the Lock Lever and be careful to properly align the pins on the SpeculATR with the grooves on the plate. Release the Lock Lever.

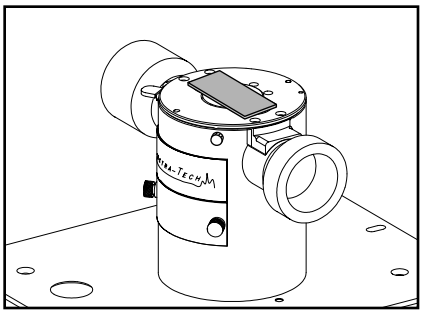

Monitor energy throughput

Place the gold reference mirror face down on the sample platform.

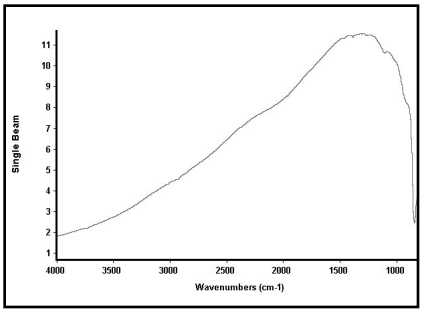

Acquire a background spectrum

Acquire a background spectrum with the reference mirror on the sample platform.

Caution: Never touch the mirrored surface. To occasionally remove dust, use compressed air only.

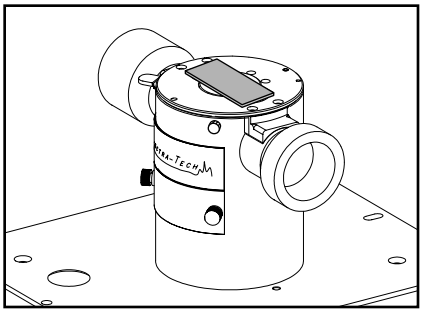

Place the sample on the sampling surface

Remove the gold reference mirror and place it in the protective case.

Place the sample on the sample platform (with the same mask that was used to acquire the background).

Note: The same mask should be used when acquiring the background spectrum and the sample spectrum.

Specular Reflectance

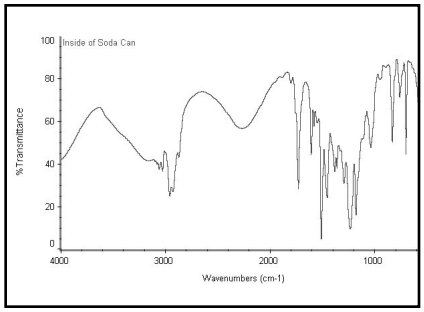

Acquire the sample spectrum

Acquire the sample spectrum.

Ratio it against the previous background spectrum.

CPC Diffuse Swap-Top Operation

Description

The Foundation CPC Diffuse module is an easy-to-use, inexpensive diffuse reflectance accessory for FT-IR spectrometers. It is the perfect complement for low-cost FT-IR spectrometers and for high sample volume environments such as quality control labs. This module simplifies the sampling of powders, fibers and rough surfaces by not requiring extensive sample preparation - there is no need to press pellets or mix samples with a mulling agent. The durable design employs ultra-high efficiency optics which are simple to align and offer excellent sensitivity.

Using diffuse reflectance, samples can be analyzed either directly or as dispersions in non-absorbing matrices - e.g. alkali halides (such as KBr) for qualitative analysis. Even intractable samples, such as cured epoxy resins, hard plastics and painted surfaces can be analyzed with the aid of the Si-Carb Sampler. Diffuse reflectance eliminates the need for heavy duty presses or the oily mess of a mull.

The high throughput and signal-to-noise ratios of FT-IR spectrometers have made diffuse reflectance a powerful infrared sampling technique. Currently, DRIFTS (Diffuse Reflectance Infrared Fourier Transform Spectroscopy) offers a number of advantages as a sampling technique, including:

- Minimal or no sample preparation.
- Very high sensitivity (down to low ppm levels).
- Ability to analyze most non-reflective materials, including highly opaque or weakly absorbing materials.
- Ability to analyze irregular surfaces or coatings, such as paint chips.
- Suitability for very large, intractable samples through the use of specialized sampling devices.

Product Parts Descriptions

Optical Unit:	Contains the mirrors that direct the infrared beam through the sample onto the detector.
Gold Reference Slide:	Contains a gold mirror for a background spectrum.
Sample Slide:	Dual position for two samples or one sample and background.

CPC Diffuse Swap-Top Operation

Installation

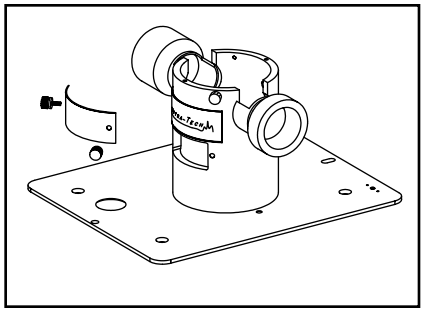

Remove the black cover plate

Unscrew the two black screws and remove the black cover plate.

Back out the two thumbscrews far enough to permit installation of the CPC Diffuse module.

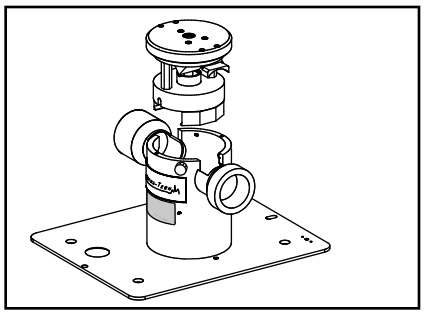

Install the CPC Diffuse module

Place the CPC Diffuse module into the Foundation base and tighten the thumb screws.

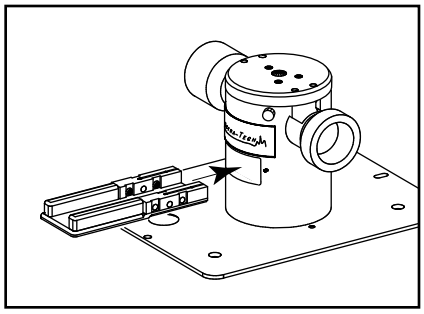

Install the sample slide

Insert the sample slide holder into the appropriate slot in the front of the accessory. Push all the way in and pull out until it clicks into the proper position.

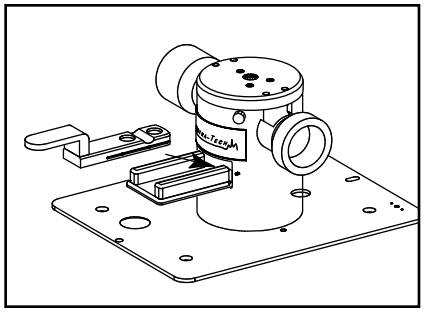

Insert the sample slide

Fill the first position of the sample slide with KBr.
See page 42 for loading instructions.

Place the sample slide into the slide holder and position the KBr in the sample beam.

Record the open beam energy of your spectrometer by monitoring either the throughput energy number or the height of the centerburst of the interferogram.

Note this value for later use.

CPC Diffuse Swap-Top Operation

Sample Preparation

Good sample preparation is the first step in obtaining high quality diffuse reflectance spectra. A 1:10 ratio of sample to matrix works well for most samples. Matrices include KBr, NaCl, KCl and diamond powder. The best results are obtained if the sample and matrix are ground and mixed thoroughly so that the particles are small and the mixture is homogeneous in size and composition. This is especially true in order to obtain the best possible resolution in the spectral peaks and for reproducible measurements.

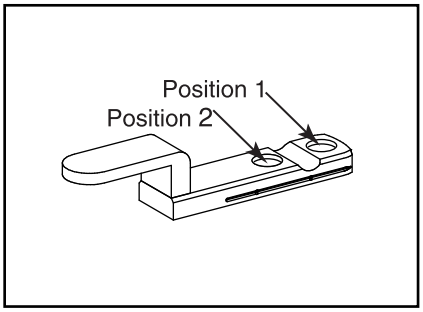

The sample slide

The sample slide has two sampling positions.

The front position (position 1) can be used for background or sample.

The back position (position 2) can be used for sample.

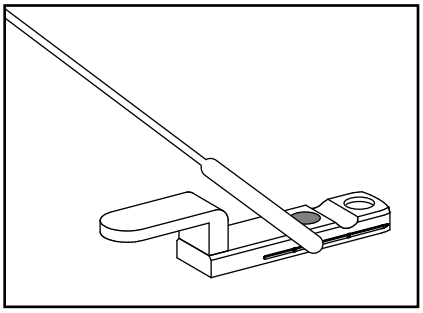

How to load the sample slide

Grind the sample and appropriate matrix and place the sample mixture in the sample slide so that it is heaped above the top edge. Draw a flat edge (spatula) over the surface making the sample flat and flush with the sides.

For the background, fill a sample position of pure matrix material.

Note: Best optical performance is obtained when the sample mixture is uniformly level with the top edge of the sampling slide.

Samples may also be analyzed neat (i.e. without dilution). For example:

Powders: Some powders may be analyzed simply by filling the sample slide with the neat powder. The sample spectrum is ratioed against a background spectrum of KBr powder.

Papers: May be analyzed directly by placing them on the sample slide.

Other Samples: May be analyzed directly on the sample slide after roughing the surface of the sample with abrasive paper to increase the proportion of radiation that is diffusely reflected.*

***Note: This last technique uses the the Si-Carb Sampler (part number 0030-130) to obtain spectra from intractable or large samples. A small disk of silicon carbide paper is used to abrade the surface to be analyzed. A mirror or a clean piece of silicon carbide paper is used as the background.**

CPC Diffuse Swap-Top Operation

Sample Preparation

If the absorbance is too strong when the sample is run neat, the sample should be mixed with a diffuse scattering matrix, such as KBr. The following are general rules to follow when preparing samples and matrices for diffuse reflectance analysis:

Organic samples:	10% Sample (by weight)	90% Matrix (by weight)
Inorganic samples:	1-5% Sample (by weight)	95-99% Matrix (by weight)

Sample slide capacity by weight: 0.3 grams KBr

Example of Organic sample, 10% by weight:

0.030 grams sample 0.270 grams KBr

Note: To obtain good quality spectra both the sample and matrix must be ground to a fine powder. To achieve a fine powder the WIG-L-BUG should be used for approximately 1-2 minutes. Alternately, a traditional mortar & pestle may be used. Thermo Spectra-Tech also has single use, preweighed, KBr Powder Packets, which contain finely ground KBr ready for use.

Operation

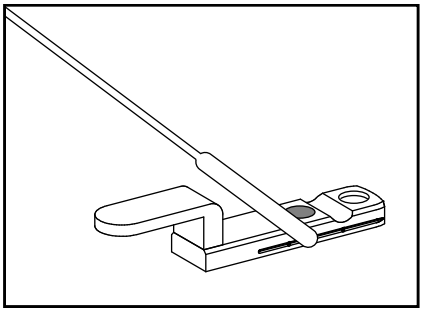

Fill the sample cups

Fill the cups with the sample mixture (refer to the sample preparation instructions on page 42).

The sampling slide should be filled flat to the the top.

The two sample positions can be used for a background and sample or two samples.

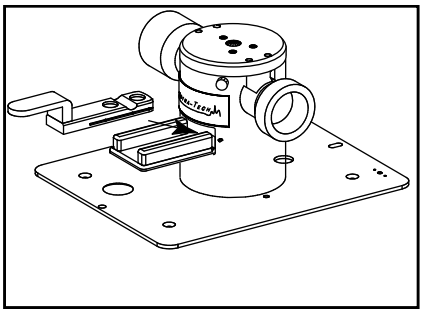

Place the sample slide in the module

The first position should be filled with the background (reference) matrix.

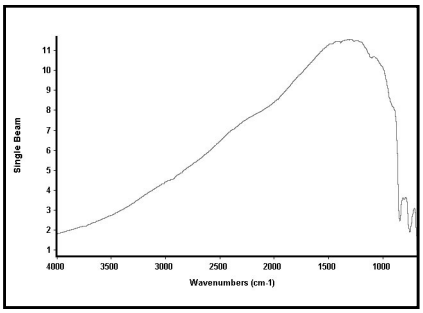

Collect background spectra

Collect the background (reference) spectrum.

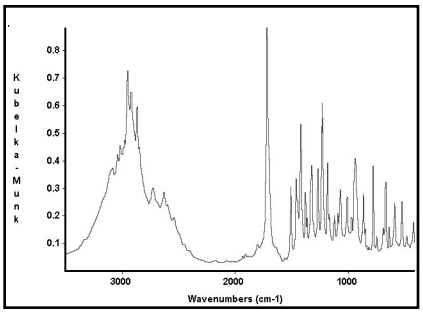

Collect sample spectra

Move the sample slide to position 2.

Acquire the sample spectrum.

Ratio the sample spectrum against the reference spectrum.

Si-Carb Sampler

Intractable Samples

Diffuse reflectance is not limited to powders and small solid samples. A Si-Carb Sampler can be used in conjunction with the Foundation Series to analyze many types of intractable samples without time consuming sample preparation. A small disk of silicon-carbide paper is used to abrade the surface to be analyzed. This technique transfers a small amount of sample to the disk. An infrared spectrum is obtained of the material adhering to the surface of the silicon carbide disk. For abrading extremely hard samples, diamond paper is available.

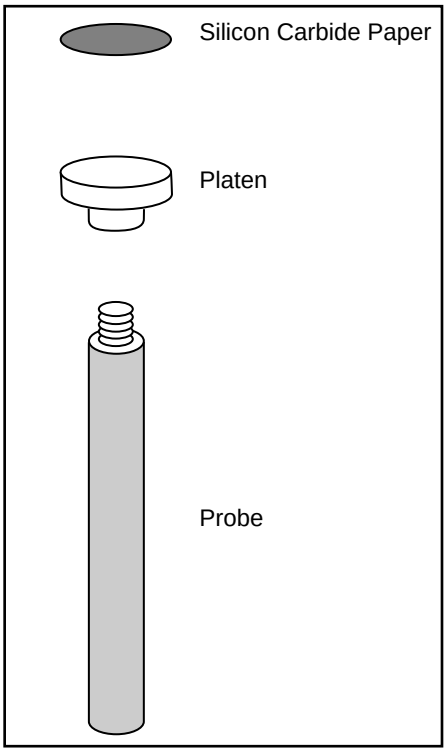

Assemble the Si-Carb Sampler

Screw the platen onto the probe.

Remove the protective backing from a piece of silicon carbide paper.

Using the backing to protect the silicon carbide, press the paper firmly onto the platen.

Obtain a background spectrum

Unscrew the platen from the probe.

Place the platen into the front position of the gold reference slide. See illustration below.

Collect a background spectrum of the silicon carbide paper.

The gold mirror can also be used as a background.

Collect sample on the Si-Carb paper

Remove the platen from the gold reference slide.

Screw the Si-Carb platen onto the probe.

Rub the silicon carbide paper so that it is covered with sample.

Obtain a sample spectrum

Unscrew the platen from the probe.

Place the platen into the front position of the gold reference slide.

Collect a sample spectrum.

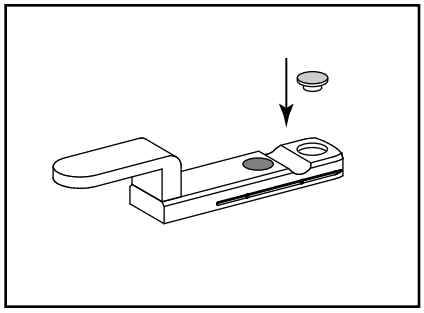

Note: Resulting spectra may be above the 100% line. This is a common occurrence due to the sample surface being more reflective than the silicon carbide paper alone.

Insert the Si-Carb platen into the gold reference slide

Insert the Si-Carb platen into the front position of the gold reference slide.

Transmission Swap-Top Operation

Description

The Foundation Series Transmission Swap-Top module allows quick accurate measurements of liquids or solids that are mounted in cells. The Swap-Top optimizes the conditions by eliminating troublesome atmospheric contributions that can obscure peaks of interest. The Transmission Swap-Top ensures a uniform, tight seal to the sample compartment. This capability greatly reduces the time wasted between experiments and proves most useful when analyzing multiple samples in succession.

Product Parts Descriptions

Accessory Housing:	Removable tray featuring a slotted well that facilitates critical cell placement. The housing will accommodate new and old transmission cells and pellet holders alike.
Purge Lid:	Removable cover that seals the Transmission Swap-Top from atmospheric conditions. Contains convenient slot that permits ST IR-cards and polymeric cards to be analyzed without breaking purge.
Purge Extension Plate:	11/16" insert provided to give additional clearance for the taller transmission cells that do not fit under the standard purge lid.
Plastic Inserts:	Removable covers, which serve as removable seals, can be customized to accommodate various types of Flow cells or Long Pathlength Liquid cells.
Slotted Wells	The Transmission Swap-Top has 3 slotted wells that facilitate rapid cell insertion and consistent sample placement. The wells are identified from left to right as numbers 1 through 3.

Transmission Swap-Top Operation

Installing the Purge Lid

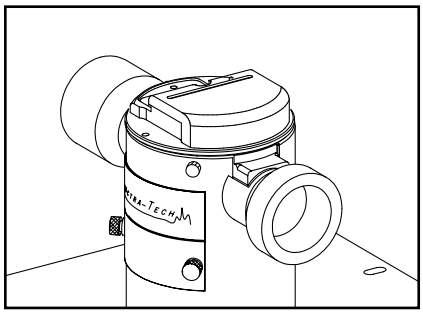

Install the Purge Lid

If not previously installed, install the purge lid.

Locate the mounting pins on either side of the accessory housing for mounting the purge lid.

Align the mounting pins on the accessory housing with the holes on the purge lid.

Analyzing with Purge Lid removed

Choose the appropriate transmission cell for your analysis. Varieties of cells are available to handle the qualitative or quantitative measurements. Cell choice will depend on a number of factors, including concentration, volume, absorbance values, and sample type.

Installing the Purge Extension Plate

The analysis of some samples requires the use of the KBr Pellet Holder and the Universal Sample Holder. These holders require additional height in the Transmission Swap-Top not provided with the standard purge lid.

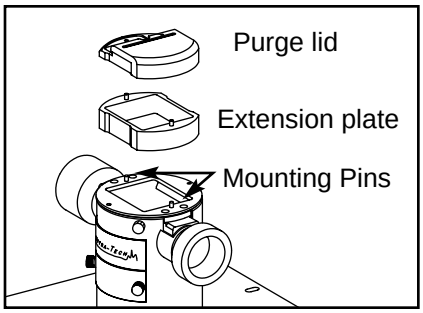

Install the purge extension plate

If not previously installed, install the purge extension plate.

Locate the mounting pins on either side of the accessory housing for mounting the purge extension plate.

Align the mounting pins on the accessory housing with the holes on the purge extension plate.

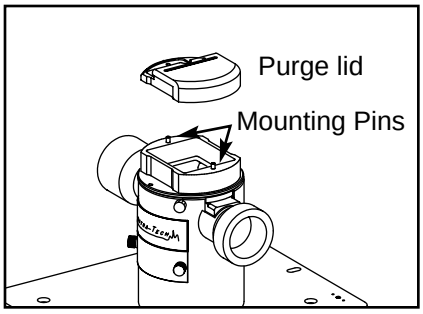

Installing the Purge Lid

If not previously installed, install the purge lid.

Locate the mounting pins on either side of the purge extension plate.

Align the mounting pins on the purge extension plate with the holes on the purge lid.

Transmission Swap-Top Operation

Using the Accessory

The Transmission Swap-Top allows you to perform purged transmission measurements while using standard liquid cells, cards, film holders and solid pellet holders. Some of the analysis can be performed without removing the purge lid.

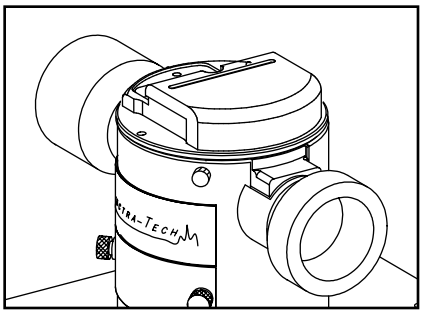

Analyzing without removing the Purge Lid

The Transmission Swap-Top can be used for rapid sampling. Set up the Swap top with the purge lid. When using the ST-IR Card, the Film Sample Card or Econo-Card simply insert the card directly through the pre-machined card slot in the top of the purge lid. This will automatically locate the card in well #1.

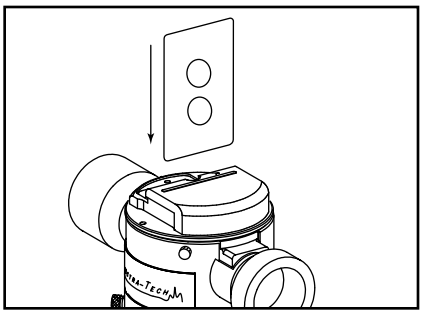

Examples when using the installed Purge Lid

Mount	Part Number	Well #
ST-IR Cards	0020-300 & 0020-301	1
Econo-Cards	0026-017 & 0026-018	1
Film Sample Cards	0026-021	1

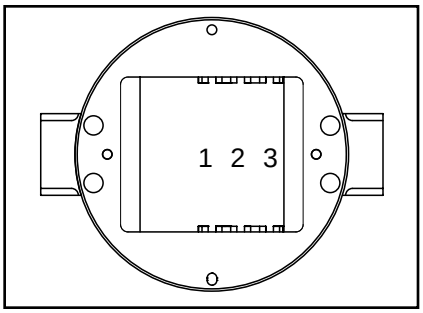

The Slotted Wells

The Transmission Swap-Top has 3 slotted wells that facilitate rapid cell insertion and consistent sample placement. The wells are identified from left to right as numbers 1 through 3. To use it, slide a cell, holder or card into a slot.

Transmission Swap-Top Operation

Using the Accessory

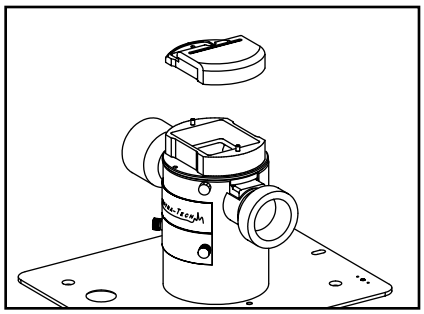

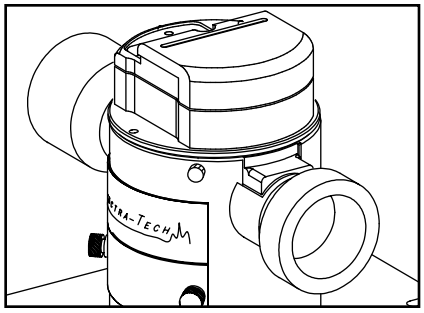

For pellets, Films and Liquids

For pellets, refer to the Pellet Holder User's Manual for sample preparation. Once the pellet is pressed, place it into the appropriate holder.

For films, prepare the film according to the instructions found in the Film Maker's User's Manual. Place the film into the appropriate holder.

For liquids, fill the cell according to the User's Manual.

Remove the purge lid.

Install the holder into the designated well.

Replace the purge lid and allow the cell to purge out the carbon dioxide and water vapor. If the Foundation Series Swap-Top Module was purged before lid removal, it should take no longer than 2 minutes to completely purge. It is typical for a spectrometer sample compartment to take as long as 11 minutes to reach this point.

Examples when the Purge Lid must be Removed prior to analysis

Mount	Part Number	Well #
Magnetic KBr Pellet Holder	0016-008	1
Magnetic Film Holder	0022-002	2
KBr Pellet Holder*	0016-121	1
Universal Sample Holder*	0016-213 & 0016-225	3
Spectra-Tech Sealed Cell	FT04-7### to FT04-8##	1
Bolt Down Holder**	FT04-060	2
SS Prec. Pathlength Cell	0003-5##	1
Small Volume Sealed Cell	0004-6##	1
Cavity Cells	7001-### & 7002-2###	1
Spectra-Tech Demountable	FT04-036	1
10mm Demountable Cell	0004-###	1
25mm Demountable Cell	0004-###	3
Presslok Cell Holder	0018-012 & 0018-014	2

*Purge extension plate must be used to fully purge the Transmission Swap-Top module.

**The Bolt Down Holder is used with the Sealed and Demountable EZ-Fill / EZ-Flow Cells.

Endurance Swap-Top Operation

Description

The Endurance is a single-reflection ATR accessory that utilizes a diamond crystal with a ZnSe focusing element. The diamond sits slightly proud of the Swap-Top's surface to assure that uniform contact is obtained between the sample and the sampling surface. The fail-safe pressure devices, the Tilt Back Pressure Tower and the Lightning Viewer, provide this "point-to-point" contact, and reduce the need for tedious sample positioning.

One reflection at 45° angle of incidence results in an active sampling area of 0.75mm. The infrared light penetrates the surface a couple of microns, therefore any amount of sample that covers the diamond crystal is sufficient for measurement. The small contact area permits the Endurance to effectively analyze small samples including paint chips, paper contaminants, single fibers, and powders.

Tilt Back Pressure Tower

The Tilt Back Pressure Tower has a "hinge" mechanism, that allows the tower to tilt back to a 60° angle, allowing users to clean the crystal with ease. It has a slip-clutch, calibrated pressure mechanism for consistent pressure on the sample.

Lightning Viewer

The Lightning Viewer is an optional pressure device that mounts on the Endurance. The Lightning Viewer provides 8.5X viewing capabilities. This magnification allows you to see the sample on the crystal under magnification, facilitating manipulation and accurate positioning of small samples. The Lightning Viewer has the same slip-clutch, calibrated pressure mechanism as the Tilt Back Pressure Tower. The Lightning Viewer also has a "hinge" mechanism that allows the user to tilt the pressure device back to a 60° angle and clean the crystal with ease.

Product Parts Descriptions

Optical Unit:	Contains the mirrors that direct the infrared beam through the sample onto the detector.
Tilt Back Pressure Tower:	Provides the uniform contact between the sample and the ATR crystal. With calibrated pressure mechanism for consistent pressure on the sample.
Lightning Viewer:	Provides the uniform contact between the sample and the ATR crystal while viewing the sample. With calibrated pressure mechanism for consistent pressure on the sample.

Endurance Swap-Top Operation

Tilt Back Pressure Tower

The acquisition of ATR spectra requires intimate contact between the ATR crystal and the sample. The Tilt Back Pressure Tower is designed to achieve optimum contact between solid samples of varying overall thickness and the crystal assembly.

Installing the Tilt Back Pressure Tower

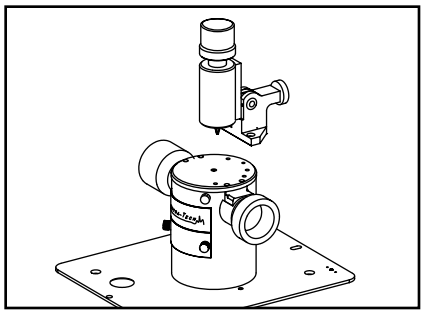

Install the Tilt Back Pressure Tower

If not previously installed, install the Tilt Back Pressure Tower.

Locate the mounting holes (and the 10/32 socket screws provided) for mounting the Tilt Back Pressure Tower assembly.

Align the mounting holes on the Tilt Back Pressure Tower with the holes on the Endurance's top plate.

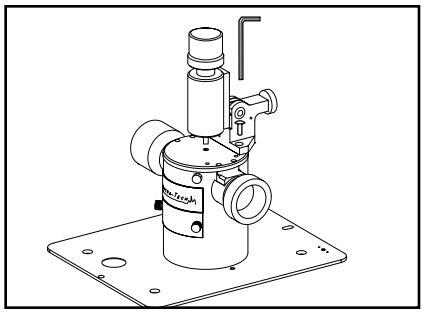

Secure the pressure device to the base unit

Secure the Tilt Back Pressure Tower assembly to the base unit using the mounting screws.

Tighten with the 3/32 hexkey provided.

Preparing the Pressure Tower for Sampling

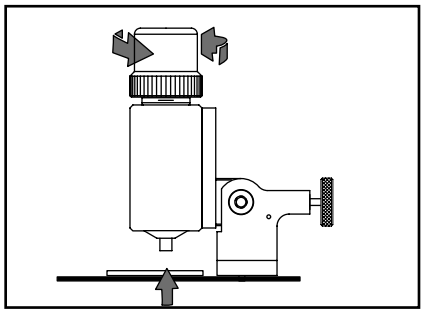

Release the pressure

Raise the pressure point tip up by rotating the pressure knob counter clockwise.

Stop rotating when the pressure point tip stops moving.

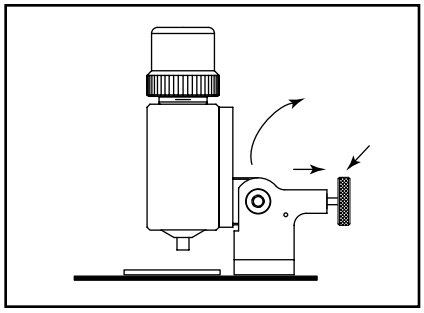

Disengage the release mechanism

Turn and pull the silver release knob at the back of the Tilt Back Pressure Tower.

Once the release mechanism is disengaged, tilt the pressure device out of the way. Tilt back until the silver release knob engages in the back position.

Endurance Swap-Top Operation

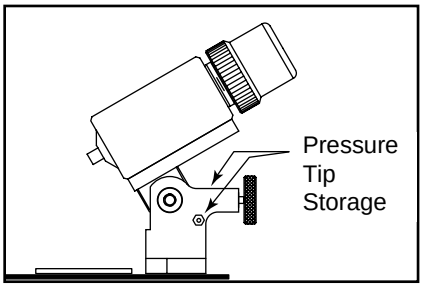

Choose the Pressure Tip

Determine which tip is best suited for the application.

Unscrew the appropriate tip from its convenient storage hole located on either side of the base of the tilt back mechanism.

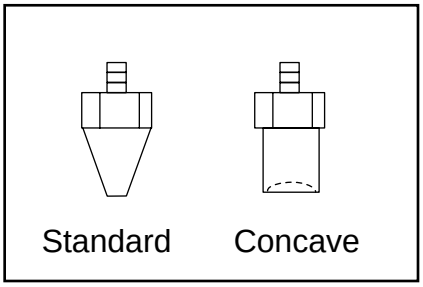

The Pressure Tips

The standard tip is ideal for fibers, o-rings, paint chips, polymers sheets and other flat solid samples.

The concave tip is useful for polymer beads, small odd shaped rigid samples and powders.

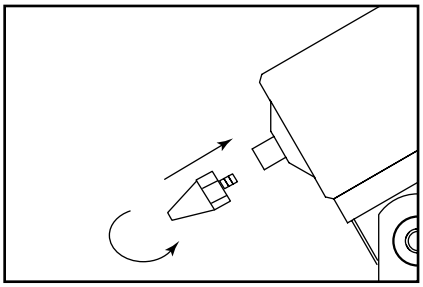

Install the Pressure Tips

Install the chosen tip by screwing it clockwise until finger tight. Do not overtighten. It is not necessary to use any tools for this step.

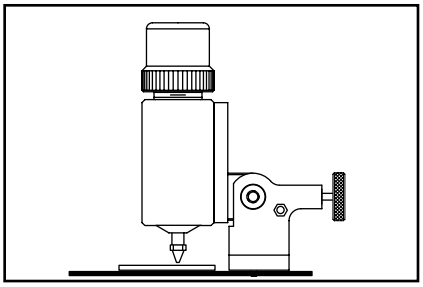

Reposition the pressure tower

While holding the pressure tower pull the silver knob out and move the tower to the upright position. The knob will lock in place automatically.

Cleaning the Tilt Back Pressure Tower

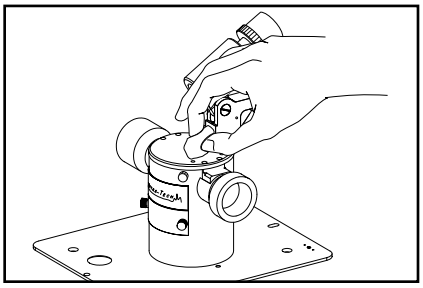

Clean the crystal

Tilt back the pressure device. The crystal can be cleaned with water or an appropriate solvent.

The crystal must be cleaned using an undyed, unscented tissue, cotton balls or cotton swabs moistened with solvent.

Dry the crystal.

Endurance Swap-Top Operation

Caution: Do not let the pressure point fall onto the crystal. Be certain the knob is fully released before moving the pressure device.

Note: The Tilt Back Pressure Tower and Lightning Viewer are fail-safe mechanisms which greatly reduce the risk of damage to the crystal. When using the Tilt Back Pressure Tower and Lightning Viewer, please observe the following precautions:

Do not use the Tilt Back Pressure Tower and Lightning Viewer to crush samples.
Do not apply pressure to the crystal for extended periods of time.

Lightning Viewer

Installing the Lightning Viewer

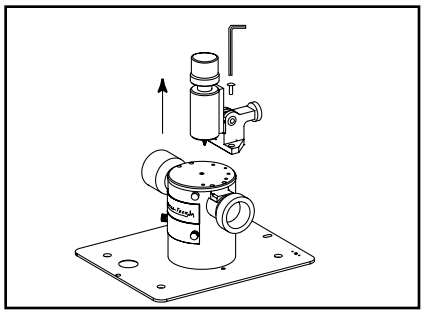

Remove the Tilt Back Pressure Tower

With a 3/32 hexkey remove the two screws that fasten the Tilt Back Pressure Tower.

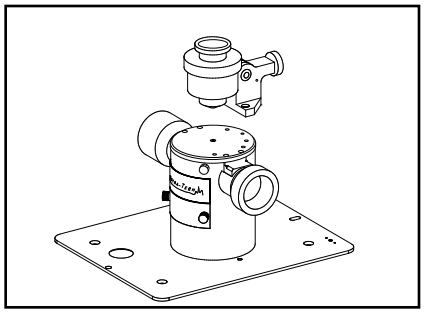

Secure the Lightning Viewer

The Lightning Viewer is secured by two 10-32 low head screws.

Tighten with the 3/32 hexkey.

Preparing the Lightning Viewer for Sampling

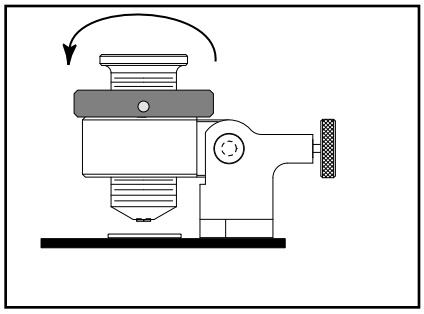

Release the pressure

Raise the pressure point up by rotating the pressure knob counter clockwise.

Stop rotating when the pressure point stops moving.

Endurance Swap-Top Operation

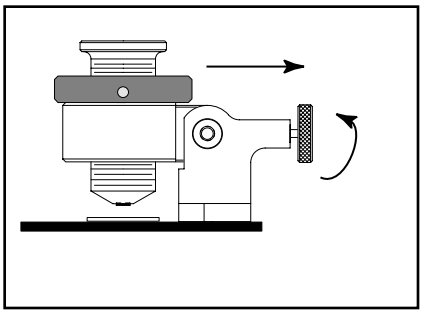

Disengage the release mechanism

Turn and pull the silver release knob at the back of the pressure device.

Cleaning While Using the Lightning Viewer

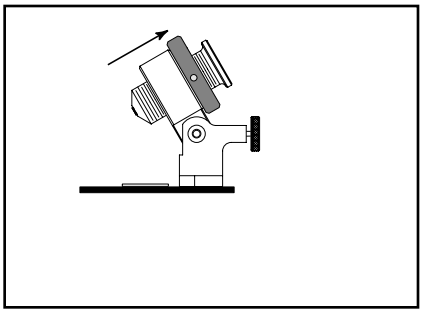

Tilt back the Lightning Viewer

Once the release mechanism is disengaged, tilt the pressure device out of the way. Tilt back until the silver release knob engages in the back position.

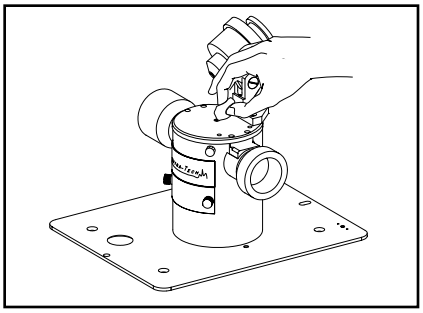

Clean the crystal

Release and tilt back the pressure device.

The crystal can by cleaned with water or an appropriate solvent.

The crystal must be cleaned using an undyed unscented tissue, cotton balls or cotton swabs moistened with solvent.

Dry the crystal.

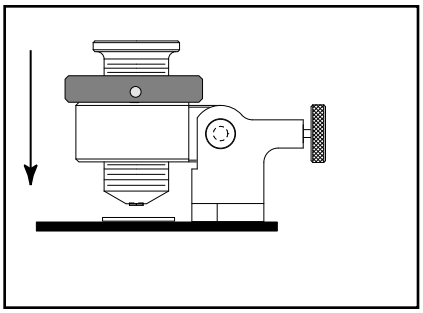

Reposition the Lightning Viewer

While holding the Lightning Viewer pull the silver release knob out and move the viewer to the upright position. The knob will lock in place automatically.

Caution: Do not let the pressure point fall onto the crystal. Be certain the knob is fully released before moving the pressure device.

Endurance Swap-Top Operation

Solids & Films

Note: For solids & film samples observe the following precautions:

- For best results, the sample should cover the crystal surface under the pressure point tip.
- When analyzing films and irregular samples, use of a pressure device is recommended to maintain even and intimate contact between the sample and the crystal.

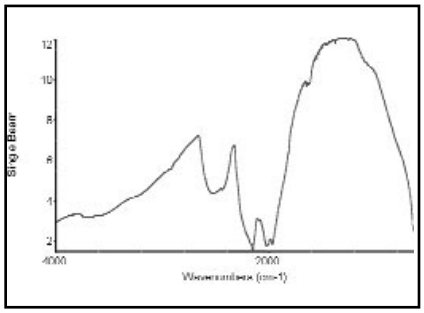

Acquire a background spectrum

Acquire a background single-beam spectrum with the clean crystal sampling plate in place.

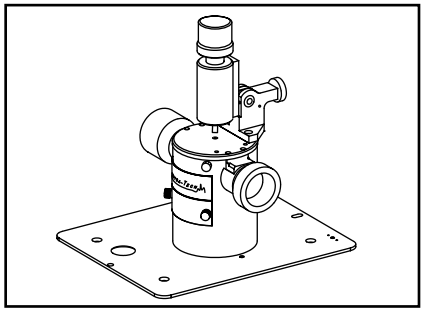

Place the sample on the crystal sampling surface

Place your sample on the crystal sampling surface observing the precautions listed above.

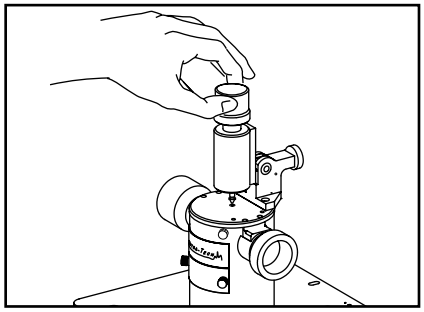

Apply pressure

Turn the knurled ring on the pressure device until it begins to slip and you hear the audible click. At this point there is maximum pressure applied to the sample. Note, because the pressure device is a fail-safe device, the slippage you experience will prevent damage to the crystal.

Watch to see that the sample remains centered under the pressure tip.

Solids & Films

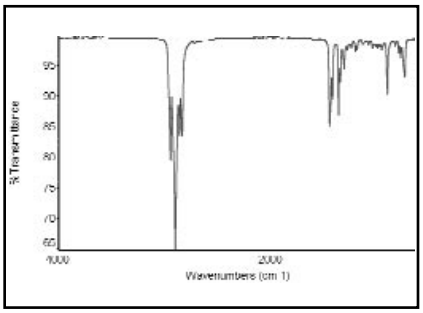

Acquire a sample spectrum

Acquire a sample single-beam spectrum.

Ratio it against the previously acquired reference single-beam spectrum.

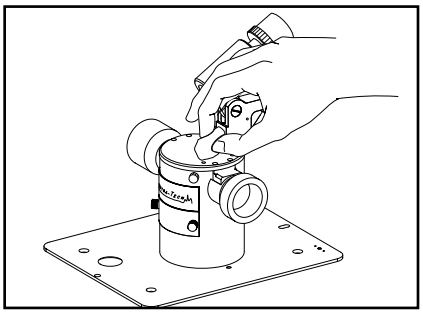

Clean the crystal

Release and tilt back the pressure device.

Clean the sample off the crystal using a cotton ball or cotton swab moistened with an appropriate solvent.

Endurance Swap-Top Operation

Liquids

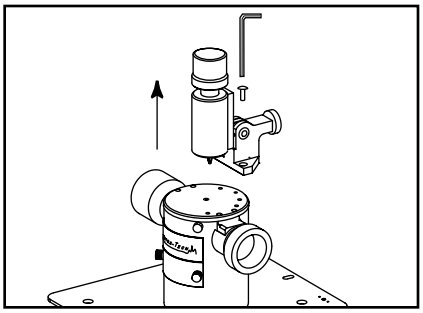

Remove the pressure device

Place the Endurance Swap-Top accessory on a horizontal surface (table top).

Be sure the pressure device is not in contact with the crystal surface.

Loosen and remove the two 10-32 low head screws which hold the pressure device to the optical unit.

Remove the pressure device from the optical unit.

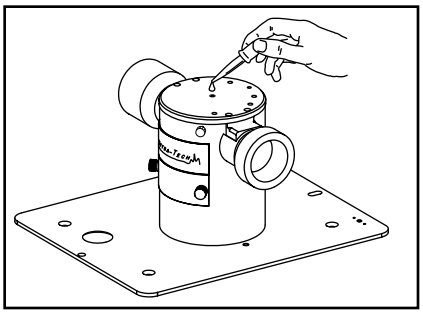

Cover the crystal with liquid

The crystal surface needs only to be covered by a thin film of liquid.

One drop of liquid will be enough.

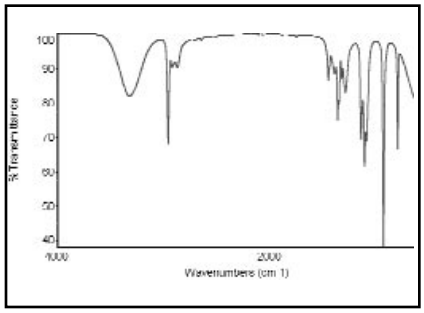

Acquire a sample spectrum

Acquire a sample single-beam spectrum.

Ratio it against the previously acquired reference single-beam spectrum.

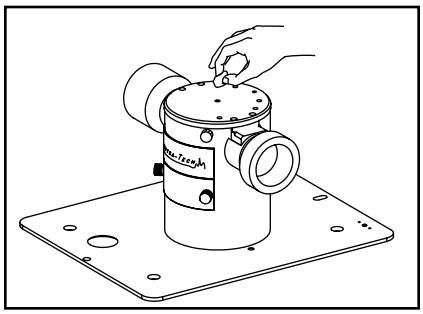

Clean the crystal

Use a tissue, a cotton swab, or a cotton ball moistened with an appropriate solvent and gently rub in a circular motion.

Fiber Link Swap-Top Operation

Description

Foundation Series Fiber Optic Kits are made up of several key componets. The FiberLink Swap-Top module is a unique transfer optic that transfers IR energy. The Fiber Optic cables are made of Chalcogenide, a mid-IR transmissive (4000–900 cm^{-1}) glass with chemical properties similar to AMTIR. A patented ATR Needle-Probe or a Reflectance Needle-Probe works in conjunction with the FiberLink and the cables to provide excellent sensitivity for the analysis of liquids, reflective materials, or coatings on solid materials.

FiberLink Swap-Top Module

The FiberLink Swap-Top module is an innovative interface because it does not employ traditional beam condensing optics that have separate x-y-z position adjustment and are difficult and tedious to align. Instead, it uses nonimaging parabolic cones to bring the focused IR beam from the sample compartment to the cables making it easy to align.

Fiber Optic Cables

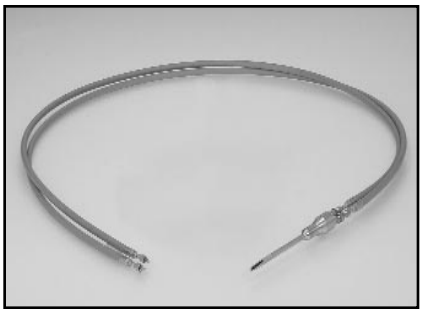

The cables are made of Chalcogenide, which is a high throughput fiber material that transmits in the mid-infrared. The fibers are glass clad and housed in a protective polymeric covering for durability and ruggedness. Unlike other commercially available infrared fiber optic cables that are quite rigid, Thermo Spectra-Tech's cables have a very flexible bend radius to analyze difficult-to-get-at samples and to reduce the risk of breakage. The fiber optic cables come in a standard length of 1.5 meters.

Fiber Link Swap-Top Operation

ATR Needle-Probe

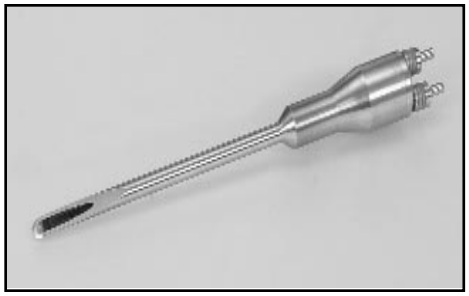

The patented (patent #5,436,454) ATR Needle-Probe utilizes ATR (attenuated total reflectance) technology to measure the infrared absorbance of liquids. The unique design of this probe allows the bent fiber (within the probe) to act as the ATR element. No traditional crystal element is needed. The ATR Needle-Probe has a sampling head that is 6.5 mm in diameter. The small diameter of the probe head allows the user to analyze samples in containers, small test tubes, and reaction vessels that have narrow necks.

Reflectance Needle-Probe

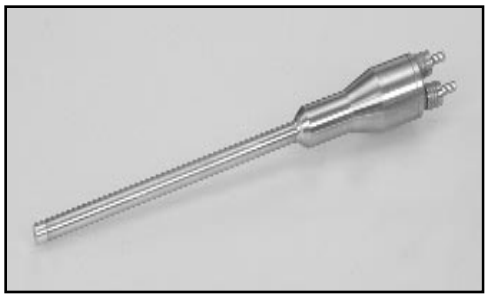

The Reflectance Needle-Probe is designed for maximum energy throughput when performing external reflectance measurements. The probe contains an input and an output fiber. The distance from these fibers to the sampling surface has been optimized for maximum sensitivity. This Needle-Probe can be used to analyze samples as small as 3 mm. This is ideal for difficult-to-get samples such as circuit board components, recessed sample areas, small sample containers, and large samples such as metal parts and forensic samples.

Probe Properties

	ATR Needle-Probe	Reflectance Needle-Probe
Fiber Material	Chalcogenide	Chalcogenide
Sampling Range	4000–900cm^{-1}	4000–900cm^{-1}
Probe Head Diameter	6.5 mm	6.5 mm
Useful Temperature Range	ambient to 60˚C	NA
Cable Length	1.5 meters	1.5 meters
pH Compatibility	1 - 9	NA

Cautions

WARNING: Avoiding the following cautions can result in permanent damage to your Fiber Optic accessory!!

- To avoid breaking the cables, do not bend cables into a radius smaller than 6 inches.
- Do not drop the Needle-Probes or cables, which could result in permanent damage.
- The Needle-Probes can be used in solutions with a pH between 1 to 9. Using the probes in basic solutions will cause irreversible damage.
- Hand tighten all connections. The use of tools may damage the ends of the probes or cables.
- Avoid touching the ends of the probes and cables with your fingers. If necessary, clean these areas with a cotton ball and water.
- Do not close the sample compartment cover on the cable, which may permanently damage the cable.
- Avoid snapping or whipping the cables, this will cause irreversible damage.
- Avoid sudden temperature changes, this may permanently damage the Needle-Probes.
- Avoid the use of THF (Tetrahydrofuran) and DMSO (Dimethylsulfoxide), which will damage the probes.

Fiber Optic Cable Installation

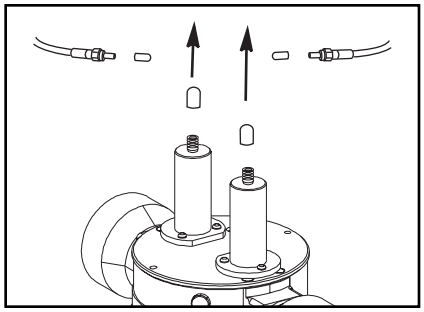

Remove the small red caps from each end of the fiber optic cable.

Remove the small caps from the two (2) ports located on top of the FiberLink Swap-Top module.

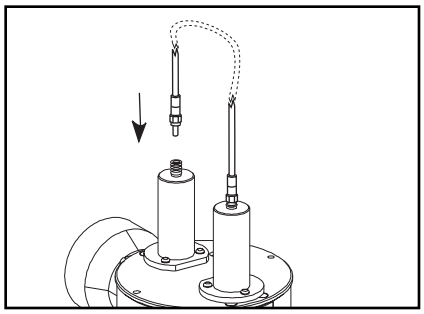

Carefully connect each end of the fiber optic cable to the ports located on top of the FiberLink Swap-Top module.

HAND TIGHTEN ONLY!

NOTE: Be certain the the cable is sitting straight on the port before tightening the connector.

CAUTION: Be very careful to ensure that the cables do not bend beyond their bending radius (6 inches).

NOTE: The cable bends in the illustrations are not to scale

Check the throughput of cable #1

Take a background spectrum of the spectrometer's open beam.

Install the FiberLink Swap-Top module with cable #1 already connected.

Take a sample spectrum and display in % T.

Expected throughput should be in the neighborhood of 10%T as measured with a DTGS detector. Actual throughput may vary as a function of your spectrometer's source collection optics and detector foreoptics.

Check the throughput of cable #2

Repeat the above procedure for cable #2.

Fiber Optic Cable Installation

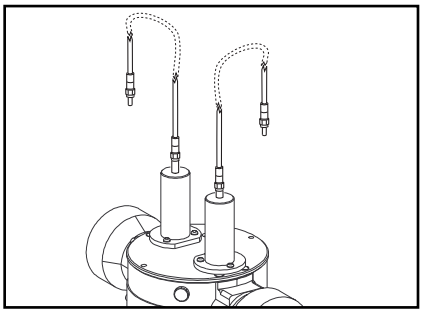

Reattach cable #1 to the FiberLink

Remove one end of cable #2 from the FiberLink (leave the other end attached to the FiberLink).

Reattach one end of cable #1 to the FiberLink.

NOTE: The cable bends in the illustrations are not to scale

NOTE: Be certain that the cable is sitting straight on the port before tightening the connector.

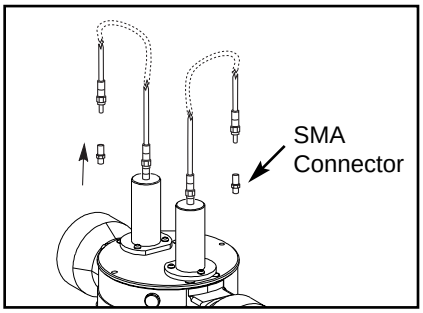

Attach the SMA connectors

Attach an SMA connector to the free ends of each cable.

ATR Needle-Probe

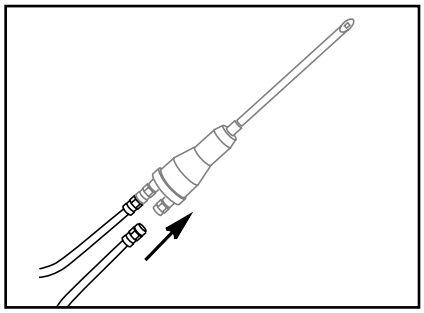

Attach the ATR Needle-Probe

Remove the plastic caps from each end of the Needle-Probe.

NOTE: Be careful not to touch the ends of the Needle-Probe.

Attach the fiber optic cables to the connections of the Needle-Probe.

Hand tighten the connectors. Do not use any tools to tighten the connections.

Check the throughput of the Needle-Probe

Use a background of the empty sample compartment as indicated on page 63.

Hold the Needle-Probe so that the tip is not in contact with the sample but suspended in air.

Take a sample file and display in %T. Expected throughput should be in the neighborhood of 1%T as measured with a DTGS detector

Actual throughput may vary as a function of your spectrometer's source collection optics and detector foreoptics.

ATR Needle-Probe

CAUTION: Be very careful to ensure that the cables do not bend beyond their bending radius. Do not let the cables drop to the floor or bench.

CAUTION: DO NOT immerse the ATR Needle-Probe in a liquid with a pH > 9!

NOTE: Before collecting each spectrum check that all fiber optic connections are properly hand tightened. The connections will gradually loosen from normal movement. This effect will be visible in the spectral results as lower throughput or optical fringing in the baseline.

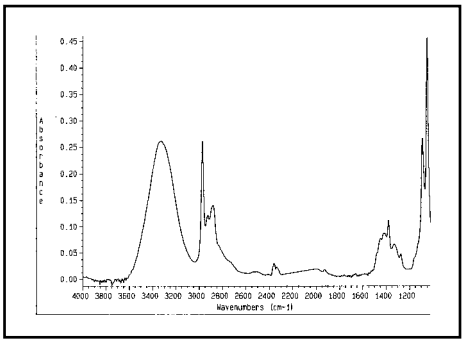

Collect the sample spectrum

Place the Needle-Probe in contact with the sample.

Collect the sample spectrum.

NOTE: It is necessary only for the tip of the Needle-Probe to touch the sample.

Important Note! The spectral region between 2300–2200 cm^{-1} (approximately) is completely absorbing, due to the H-Se band. This band can be computationally removed. See the spectrometer manufacturer's software manual.

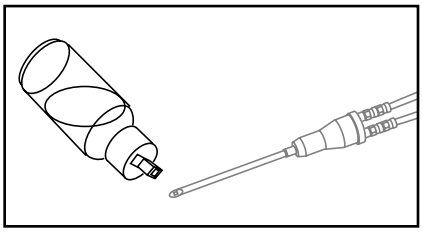

Clean the ATR Needle-Probe

Use a cotton swab and a squirt bottle filled with room-temperature water to clean the ATR Needle-Probe.

CAUTION: Do not immerse the ATR Needle-Probe in running water.

Reflectance Needle-Probe

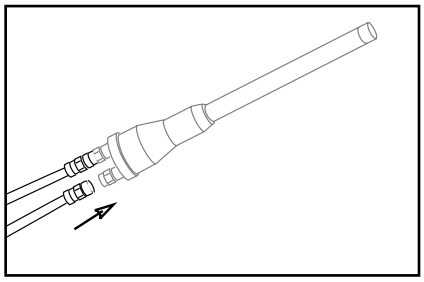

Attach the Reflectance Needle-Probe

Remove the small red caps from each end of the Needle-Probe.

Attach the fiber optic cables to the connectors of the Needle-Probe.

Hand tighten the connectors.

NOTE: Be careful not to touch the ends of the Needle-Probe.

Check the throughput of the Needle-Probe

Use a background of the empty sample compartment as indicated on page 63.

Hold the Needle-Probe so that the tip is in contact with the gold mirror.

Take a sample file and display in %T. Expected throughput should be in the neighborhood of 0.7%T as measured with a DTGS detector.

Actual throughput may vary as a function of your spectrometer's source collection optics and detector foreoptics.

CAUTION: Be very careful to ensure that the cables do not bend beyond their bending radius. Do no let the cables drop to the floor or bench.

NOTE: Before collecting each spectrum check that all fiber optic connections are properly hand tightened. The connections will gradually loosen from normal movement. This effect will be visible in the spectral results as lower throughput or optical fringing in the baseline.

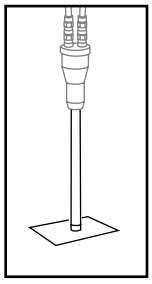

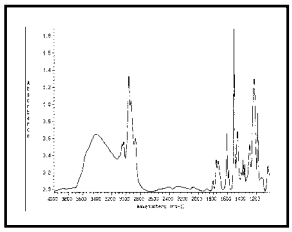

Collect the sample spectrum

Hold the Needle-Probe so that the tip is flat against the sample.

Collect the sample spectrum.

See Important Note regarding spectral range on the preceding page.

Clean the Reflectance Needle-Probe

Use a tissue to clean the Reflectance Needle-Probe.

Troubleshooting

PROBLEM	SOLUTION
Low Energy Throughput	1. Tighten the SMA connectors. 2. Check the spectrometer “gain” setting.
No Energy Through Detector	1. Tighten the SMA connectors. 2. Remove the Needle-Probe, check cables for low throughput, see page 63. 3. Check for damage to the Needle-Probe.
Fringing in Spectra	1. Adjust the SMA connectors. If the connectors are not finger tight this may occur. 2. Clean cable and Needle-Probe tips with cotton ball and solvent to remove any contamination.
Poor Spectral Quality	1. Check the spectrometer, and check proper software settings. 2. Lengthen data collection time. 3. Use a different Needle-Probe more appropriate to the sample.

Notes

Theory

ATR Theory

Attenuated Total Reflectance (ATR) Spectroscopy is a versatile and powerful technique for infrared sampling. Since materials are normally analyzed by ATR with minimal or no sample preparation, it is a rapid technique for obtaining the infrared spectrum of a solid or liquid phase material. Materials which are either too thick or too strongly absorbing to be analyzed by transmission spectroscopy can be routinely analyzed using ATR spectroscopy. ATR is also useful when only the surface of the material needs to be analyzed.

Internal reflection spectroscopy is a common infrared technique in which the infrared radiation is passed through an infrared transmitting crystal of high refractive index, allowing the radiation to reflect in the crystal one or more times. In this way, an evanescent wave penetrates into the sample in contact with the crystal, producing a spectrum of the sample.

In a typical application of this technique, the sampling surface is held in a vertical orientation, with sample material placed on one or both sides of the ATR crystal. This orientation, however, makes it difficult to achieve uniform sample contact with the crystal surface - a necessity if you desire reproducible data. In addition, it is virtually impossible to sample many non-rigid materials, such as liquids, gels or pastes.

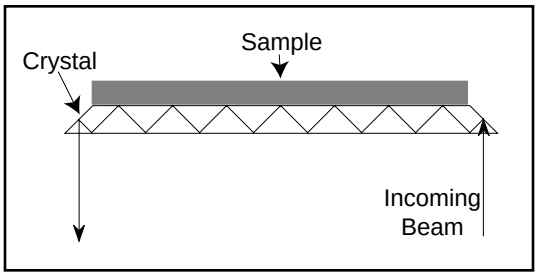

This difficulty is overcome by providing a horizontal, “face-up” sampling surface, to allow convenient sample handling of virtually all materials.

The following equation defines the effective pathlength for ATR measurements. These calculations can be used to determine the best crystal materials for specific applications.

Effective Pathlength (EPL):

EPL= No. of Reflections x Depth of Penetration (dp)

Depth of Penetration:

$$dp = \frac{\lambda/n_1}{2\pi\,[\sin^2\theta - (n_s/n_1)^2]^{1/2}}$$

λ = wavelength (cm^{-1})
n_1 = refractive index of crystal
n_s = refractive index of sample
θ = crystal face angle

In addition, users will need to verify that the sampling crystal is not soluble or otherwise damaged by the sample. If additional information is required, contact the Thermo Spectra-Tech Technical Support Center.

ATR Crystal Specifications

	Ge	ZnSe	Si	Diamond
Transmission Range (cm^{-1})	5500-675	20,000-650	8300-660 & 360-70	4500-2500 1667-33
Refractive index @ 1000 cm^{-1}	4.0	2.4	3.4	2.37
Density (g/cm^3)	5.32	5.27	2.33	3.51
Hardness (Knoop #)	1150	137	1150	7000
Useful pH range	1 - 14	5 - 9	2 - 14	1-14
Cleaning Agents	acetone*, alcohol, H_2O	acetone*, alcohol,H_2O	acetone*, alcohol,H_2O	acetone*, alcohol,H_2O
Solvents which attack material	H_2SO_4, aqua. regia	Acids, Strong Alkalies Amines	HF & HNO3	K_2CrO_7 Conc H_2SO_4
Remarks	*hard and brittle, reflection losses*	*hard and brittle, good ATR material*	*hard and brittle withstands thermal shock*	*Hard*

** Avoid long term exposure*

For a complete description of the theory of Attenuated Total Reflectance please refer to Thermo Spectra-Tech's FT-IR Technical Note #1: *Introduction to Attenuated Total Internal Reflectance (ATR) Spectroscopy*.

Caution: Note for cleaning solvents, avoid the use of ketones such as acetone and chlorinated solvents, such as methylene chloride, chloroform etc. These may attack the bonding agent.

The Multi-Reflection HATR and SpeculATR are equipped with Zinc Selenide crystals (as the standard option). ZnSe is the material of choice for many advanced FT-IR sampling technologies, having replaced KRS-5.

Please observe the following precautions to extend the operating life of your ZnSe crystal:

- Do not use ZnSe to analyze solutions containing strong acids or alkalies. The preferred pH range is 5-9.
- Do not wash or clean the crystal with solutions of strong acids, alkalies or oxidizing agents.
- ZnSe is hard, yet brittle and should not be subjected to mechanical and/or thermal shock. Do not apply undue pressure to the crystal during an ATR measurement. Do not drop the accessory/crystal or wash it in solvents at temperatures above those at which the sample has just been analyzed.
- The surface(s) of the crystal must be cleaned gently, using soft materials in conjunction with a suitable solvent. Cotton swabs or cotton balls are recommended. Surface scratches will reduce the optical throughput.
- The crystal must not be cleaned in an ultrasonic cleaner.
- Sudden temperature changes, greater than 5˚C, can damage the ZnSe crystal.

Caution: Do NOT use KimWipes™ to clean the crystal surfaces. This will cause severe scratching of the crystal surface.

Theory

Diffuse Reflectance Theory

Diffuse reflectance offers many advantages over the traditional solid sampling methods such as KBr pellets and mulls; less sample preparation is required, a wide variety of sample types can be analyzed, and the technique is often nondestructive. Therefore, diffuse reflectance has become a rapid, powerful and widely used technique in the FT-IR analysis of solid samples. It is frequently used to analyze powders and rough surfaces. In addition, with the use of a silicon-carbide sampling kit, diffuse reflectance can be used for the analysis of large intractable samples.

When infrared radiation is directed onto the surface of a solid sample, two types of reflected energy can occur. One is diffuse reflectance and the other is specular reflectance. The specular component is the radiation which reflects directly off the sample surface (it is the energy which is not absorbed by the sample). Diffuse reflectance is the radiation which penetrates into the sample and then emerges (see Figure 1). A diffuse reflectance accessory is designed so that the diffuse reflectance energy is optimized and the specular component is minimized. The optics collect the scattered radiation and direct it to the infrared detector.

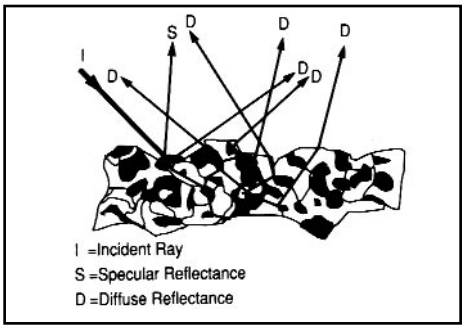

Figure 1

The sample is usually ground and mixed with a material such as KBr, that acts as an infrared transparent matrix. By diluting the sample in a matrix, the proportion of the infrared beam that penetrates into the sample is increased.

Spectra obtained by the diffuse reflectance technique often appear different from normal transmission spectra. The peak intensities at higher wavelengths tend to have decreased intensities relative to comparable transmission spectra and the peaks are not as sharp. For this reason, the spectra are usually transformed into Kubelka-Munk units, which compensates for these differences (see Figure 2).

The Kubelka-Munk plots of spectra from samples with good diffuse reflection characteristics can be analyzed in a manner analogous to those of absorbance spectra. Most commercial spectrometers are equipped with software which performs the Kubelka-Munk transformation. If your spectrometer does not perform the transformation, spectra can be plotted as log(1/R) which is generally equivalent to the absorbance plotting mode, assuming a suitable background has been used.

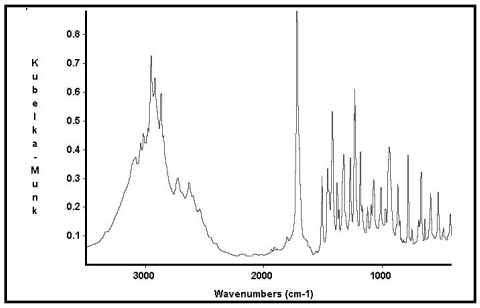

Figure 2

One relatively common effect in diffuse reflectance spectroscopy is bands that are inverted or derivative-like in shape. These distortions, called Restrahlen bands, are enhanced by specular reflectance of the radiation off the sample surface. This specular component is dependent both on particle size and on sample packing and concentration. Restrahlen effects are especially pronounced with strongly absorbing samples. To minimize or eliminate this effect, the sample can be further diluted and the matrix crystals can be crushed to a smaller and more consistent size.

For additional information, please refer to Thermo Spectra-Tech's FT-IR Technical Note #2: *Introduction to Diffuse Reflectance Infrared Fourier Transform Spectroscopy.*

Theory

CPC Diffuse Reflectance

A Compound Parabolic Concentrator (CPC) is an optical element that directs energy to the sample and collects the energy reflected back. A CPC is inherently insensitive to height adjustment, which reduces the effect of sample packing and morphology. All rays of a given input angle emerge from the exit aperture of the element. The CPC is also an efficient optic as its collection angle is very large, which optimizes it for diffuse reflection. CPCs are non-imaging - the light is scrambled and angular and surface effects are reduced. The non-imaging nature of the design also limits contribution from unwanted specular reflectance components.

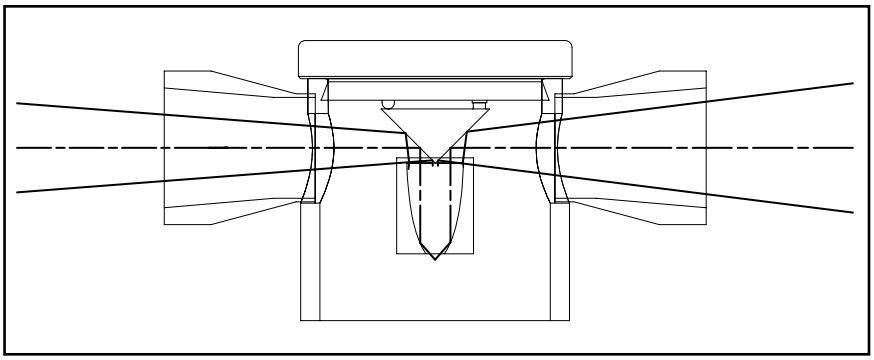

Specular Reflectance Theory

Specular reflectance provides a nondestructive method for analyzing a variety of samples such as polymer coatings, painted surfaces, lubricant films, food and beverage containers, and semi-conductors without requiring any sample preparation. Specular reflectance is used to analyze bulk materials (such as some plastics), species adsorbed to reflective surfaces (such as proteins on aluminum plates), and films on reflective surfaces (Reflection-Absorption Spectroscopy).

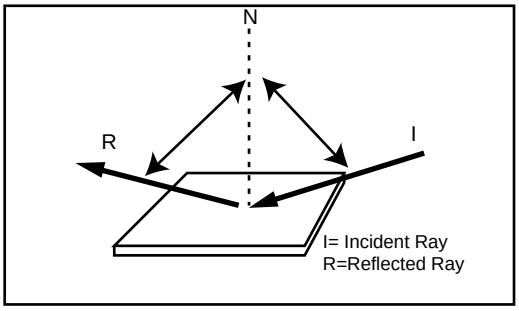

Figure 3

Specular reflectance is a mirror-like reflectance from the surface of the sample. Samples are placed horizontally on the top surface of the SpeculATR accessory. The infrared radiation is directed onto the surface of the sample at a 45° angle of incidence (angle of incidence = angle of reflectance). Refer to Figure 3.

For additional information on specular reflectance, please refer to Thermo Spectra-Tech's FT-IR Technical Note #3: *External Reflectance Spectroscopy of Surfaces.*

Thermo Spectra-Tech

Empowering Your FT-IR

A Thermo Electron business

www.thermospectra-tech.com
info@thermospectra-tech.com

Thermo Spectra-Tech
230 Long Hill Cross Rd.
PO Box 869
Shelton, CT 06484-0869

Phone: 203-926-8998
800-THE-FTIR
FAX: 203-926-8909