FOUNDATION SERIES FIBER OPTICS

User's Manual

P/N 0077-XXX

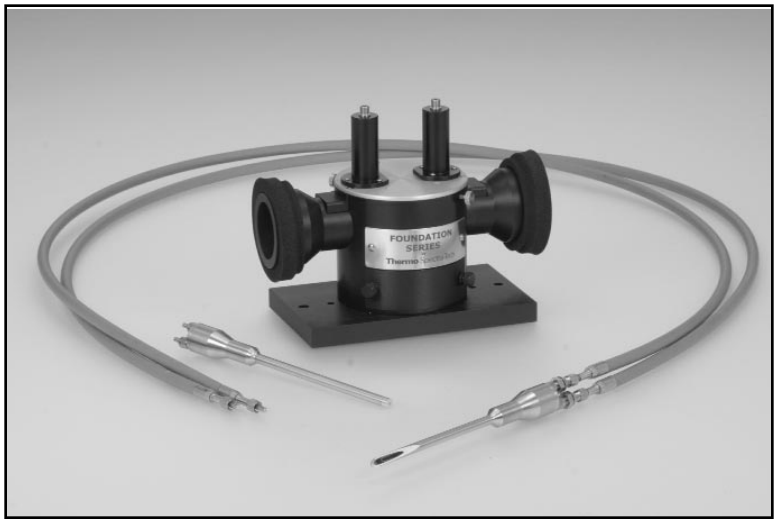

P/N 700-0161

Version 1.9

Thermo Spectra-Tech

A Thermo Electron business

Table of Contents

General Information

The Manual

This manual is designed as a tutorial to guide you through the installation of the Foundation Series™ and through a typical Foundation Series analysis. If you have any questions, please contact a Thermo Spectra-Tech Technical Representative.

Packing & Unpacking

The Foundation Series is shipped in a protective foam filled cardboard box. Upon arrival please check the box to ensure that all pieces have been received and that no pieces are damaged. Save the box for storage and shipment of the kits.

Technical Support Center

Technical materials describing the use and theory of attenuated total reflectance, diffuse reflectance and specular reflectance are available from Thermo Spectra-Tech. Additionally, a team of scientists is available at Thermo Spectra-Tech to answer any of your questions. If you encounter any problems or difficulties, or desire additional information please contact the Technical Support Center at **1-800-THE-FTIR**.

Copyrights & Trademarks

Contact Thermo Spectra-Tech

2 Research Drive
P.O. Box 869
Shelton, Connecticut 06484-0869

Telephone: 203-926-8998
Fax: 203-926-8909
www.Thermo Spectra-Tech.com

General Information

Description of the Foundation Series

The Foundation Series utilizes a single common base module, "the Foundation" which mounts in your spectrometer's sampling compartment. Each of the accessory Swap-Top modules drop into the Foundation for rapid change of analytical technique to a method which matches the precise needs of your application.

The Foundation Series combines the flexibility of multiple sampling technologies with high performance optical design to minimize analysis time and maximize your lab's sample throughput. The Foundation Series design also utilizes an integrated purge to eliminate CO_2 and water vapor interferences.

Currently there are six (6) Swap-Top modules to choose from with more choices planned for the future. The modules currently available include: Thunderdome, SpeculATR, Multi-Reflection HATR, CPC Diffuse, Endurance and Transmission. All of the modules incorporate an alignment-free design, allowing the user to install multiple Foundation modules in different FT-IR spectrometers (even different brand spectrometers) without the need to perform tedious alignment procedures. This cross-platform compatibility also reduces your need to buy redundant accessories for different manufacturer spectrometers, providing exceptional value for your lab equipment budget.

Who is the system for?

* Labs that are constantly switching accessories
* High throughput, rapid response lab environments
* Labs with multiple FT-IR platforms

Features

Swap-Top modules which mount in a common base (the Foundation)

No alignment

Quick purge

Low-cost Swap-Top upgrades

Cross-platform compatibility of modules

Applications

Strongly absorbing samples (Thunderdome, SpeculATR, Fiber Optics)

Biological fluids (SpeculATR, Multi-Reflection HATR)

Aqueous samples (Thunderdome, SpeculATR, Multi-Reflection HATR, Fiber Optics)

Polymer films (Thunderdome, Endurance)

Coatings on reflective substrates (SpeculATR, Fiber Optics)

Adhesive samples (Thunderdome, Endurance)

Organic samples (Multi-Reflection HATR)

Powders (CPC Diffuse)

Acidic/Caustic Liquids (Endurance)

Abrasive materials (Endurance)

Installation

Installing the Foundation

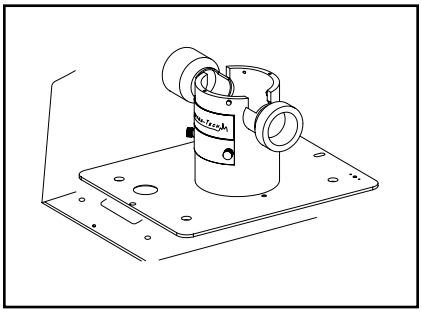

Place the Foundation in the compartment

Place the Foundation base in the sample compartment of the spectrometer with the Thermo Spectra-Tech logo facing toward you.

Note: Depending on the spectrometer there may be alignment pins and lock down screws.

Setting up the Purge

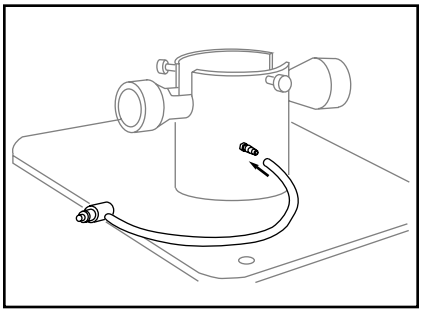

Attach the tubing

Attach the open end of the plastic tubing (provided) to the purge nipple on the Foundation.

For Thermo Nicolet systems with purge capabilities: Attach the other end of the tubing to the socket in the sample compartment.

For all other instruments: Remove the fitting and attach the other end of the hose to an external dry, CO_2 free air source.

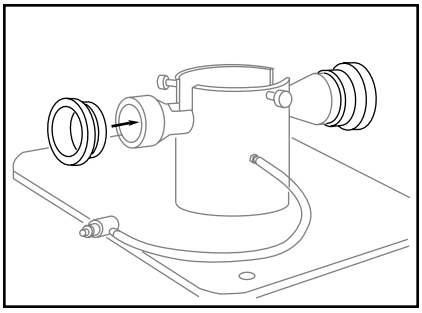

Attach the foam purge rings

Attach the foam purge rings to both ends of the Foundation base. Once the unit is placed in the sample compartment, adjust the rings until they create a seal with the wall of the sample compartment.

Swap-Top Modules

Installing a Module

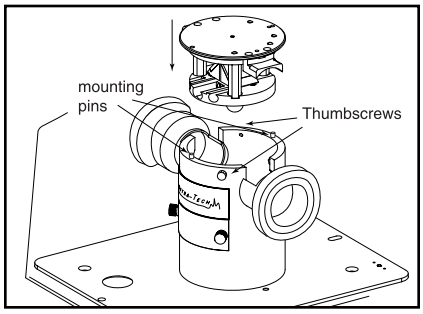

Installing a Module

If not previously installed, install the accessory module.

Back out the two thumbscrews far enough to permit installation of the Swap-Top module.

Locate the mounting pins on either side of the Foundation base. Align the mounting pins on the Foundation base with the holes on the accessory housing.

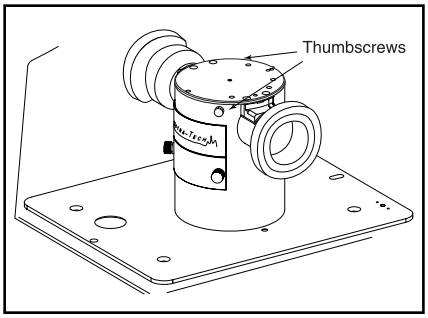

Retighten the two thumbscrews to secure the Swap-Top module for sampling.

A Swap-Top Is

A Swap-Top module is a component that drops into the Foundation base. Each Swap-Top is pre-aligned and will work in any Foundation, even those installed in different spectrometers. This eliminates the need to buy the same accessory for different instruments. The modules are easily installed and removed, so you can change sampling techniques quickly.

There are seven different Swap-Top modules currently available:

- Thunderdome
- Multi-Reflection HATR
- SpeculATR
- CPC Diffuse
- Transmission
- Endurance
- Fiber Optics

These are detailed on the following pages.

Other modules are planned for the future, so the Foundation will have increased flexibility.

Swap-Top Modules

Thunderdome Swap-Top Module

The Thunderdome Swap-Top module is a rugged ATR accessory with a Germanium crystal. The Thunderdome, available since 1997 as a stand-alone accessory, is now available as a Foundation Series module, further increasing utility. The Thunderdome is the largest selling single-reflection ATR accessory on the market today. It is easy to see why. The Thunderdome gives you rugged performance utilizing a Germanium crystal material. Germanium has a high refractive index and therefore a shallow depth of penetration making it ideal for analysis of very strong absorbers. Germanium has excellent chemical resistivity, attacked only by Aqua Regia and sulfuric acid. Finally, the Thunderdome features a domed sampling surface to focus the infrared beam and a fail-safe pressure device to obtain a good spectrum on the first try, an unprecedented feature in ATR. The newest enhancements to the Thunderdome are the Tilting Pressure Tower and the Lightning Viewer.

Features

Single-reflection ATR Germanium crystal

Tilting pressure device for easy cleaning

Reproducible pressure applied to the sample

High refractive index crystal

Collects infrared data on almost any sample

Applications

- Single polymer beads
- Formed, rigid polymers
- Paint chips
- O-rings
- Paper/contaminants
- Glass composites
- Liquids, including aqueous solutions, corrosives and caustics

The expected throughput of the Thunderdome Swap-Top module should be in the neighborhood of 30% of the open beam energy at 2000 cm-1.

Actual throughput may vary as a function of your spectrometer's source collection and detector foreoptics.

Pressure Device Options

Tilt Back Pressure Tower

The Tilt Back Pressure Tower has a "hinge" mechanism, that allows the tower to tilt back to 60 degree angle, allowing you to clean the crystal with ease. It has a slip-clutch, calibrated pressure mechanism for consistent pressure on the sample.

Lightning Viewer

The Lightning Viewer is an optional pressure device that mounts on the Thunderdome. The Lightning Viewer provides 8.5X viewing capabilities. This magnification allows you to see the sample on the crystal, facilitating manipulation and accurate positioning of small samples. the Lighting Viewer has the same slip clutch, calibrated pressure mechanism as the Tilt Back Pressure Tower. The Lightning Viewer also has a "hinge" mechanism that allows the user to tilt back the pressure device back to 60 degrees and clean the crystal with ease.

Swap-Top Modules

Multi-Reflection HATR Swap-Top Module

In 1986, Thermo Spectra-Tech patented the crystal design used in the Multi-Reflection Horizontal ATR Swap-Top module. You can choose from a variety of crystals depending on your application. The base module includes one (1) 45° Zinc Selenide (ZnSe) crystal in either a flat configuration for solids, or a trough configuration for liquids. A combo unit with two (2) crystals, flat and trough, is also available. Other crystal materials are available, including Silicon (Si) and Germanium (Ge).

Features

Multi-reflection flat and trough crystal options

ZnSe, Ge and Si crystals (all 45 degree incidence)

No alignment needed

Applications

- Liquids
- Solids
- Pastes
- Soft, compressible powders

The expected throughput of the Multi-Reflection Horizontal ATR Swap-Top module will vary with respect to the crystal material chosen. (see page 19 for crystal percentages)

Actual throughput may vary as a function of your spectrometer's source collection and detector foreoptics.

SpeculATR Swap-Top Module

The SpeculATR Swap-Top module offers single-reflection ATR combined with specular reflectance. This module provides routine single-reflection ATR spectroscopy for liquids or solids, and also 45° specular reflectance measurements. The Swap-Top module has the dual-technique flexibility, offering single-reflection HATR and specular reflectance in one accessory. The base unit includes two (2) Zinc Selenide (ZnSe) crystal assemblies, one for liquids, and one for solids. Replacement crystals cost less than one third the cost of a traditional ATR prism. Other crystal materials are available, including Silicon (Si) and Germanium (Ge).

Features

Dual purpose accessory
Single-reflection ATR 45 degree incidence
Pinned in place Fresnel ATR crystal
Low replacement cost crystal
ZnSe, Ge and Si crystals
45 degree specular reflectance
7 and 13mm masks

Applications

- Biological fluids
- Neat solvents
- Aqueous samples
- Quality control analysis
- Strong infrared absorbers

The expected throughput of the SpeculATR Swap-Top module will vary with respect to the crystal material chosen. (see page 29 for crystal percentages)

Actual throughput may vary as a function of your spectrometer's source collection and detector foreoptics.

Swap-Top Modules

CPC Diffuse Swap-Top Module

The CPC Diffuse Swap-Top module enhances diffuse reflection with CPC technology. Diffuse reflection is one of the most popular sampling techniques used today. The CPC diffuse design makes analysis easy and reliable. A novel optical element called a compound parabolic concentrator (CPC) both directs energy to your sample and collects the reflected energy. It is insensitive to sample height and sample morphology making it possible to obtain great results from samples that would foil older designs. The CPC design also minimizes unwanted specular bands from the final sample spectra.

Features

Downward looking CPC design

Less sensitive to particle morphology

Minimizes specular contamination

Easy to use sample slide

Applications

- Powders
- Organics
- Intractable solids

The expected throughput of the CPC Diffuse when using KBr, should be in the neighborhood of 3% of the open beam energy at 2000 cm-1, and 13% when using an alignment mirror.

Actual throughput may vary as a function of your spectrometer's source collection and detector foreoptics.

Transmission Swap-Top Module

The Transmission Swap-Top module greatly expands the utility of the Foundation Series by allowing you to make infrared transmission measurements with ease and speed. The Transmission Swap-Top eliminates the atmospheric water vapor and carbon dioxide that can obscure peaks of interest and complicate spectral subtractions. The Transmission Swap-Top substantially reduces the purge time per analysis by 80%. No longer will you have to remove your accessory to analyze KBr pellets, mulls or smears. The module will support a variety of infrared transmission cells and infrared cards.

Features

Optimizes purge conditions

Removable for easy cleaning

Rapid application change without losing purge

Applications

- Liquids
- Solids

Swap-Top Modules

Endurance Swap-Top Module

The Endurance Swap-Top expands the Foundation Series accessories already-wide range of capabilities. Utilizing diamond technology, the Endurance Swap-Top will give you the ability to run the samples that were previously impossible to run with traditional ATR accessories. The Endurance Swap-Top's diamond ATR crystal is virtually indestructible and can stand up to highly corrosive, caustic, intractable or abrasive samples that might damage other ATR crystal materials. The single reflection ATR accessory has a sampling area of 0.75mm diameter with effective pathlength of 2.03 micrometers at 1000 wavenumbers, assuming an average index of refraction for an organic sample of 1.5 and an angle of incidence of 45°.

Features

Single-reflection ATR Diamond crystal

ZnSe focusing element

Tilting pressure device for easy cleaning

Reproducible pressure applied to the sample

Collects infrared data on a wide variety of samples

Applications

Corrosive liquids

Highly abrasive materials

Single polymer beads

Paint chips

Highly caustic or acidic materials

Coated wires

Powders

The expected throughput of the Endurance, should be in the neighborhood of 12% of the open beam energy at 2000 cm-1.

Actual throughput may vary as a function of your spectrometer's source collection and detector foreoptics.

Pressure Device Options

Tilt Back Pressure Tower

The Tilt Back Pressure Tower.has a "hinge" mechanism, that allows the tower to tilt back to 60 degree angle, allowing you to clean the crystal with ease. It has a slip-clutch, calibrated pressure mechanism for consistent pressure on the sample.

Lightning Viewer

The Lightning Viewer is an optional pressure device that mounts on the Endurance. The Lightning Viewer provides 8.5X viewing capabilities. This magnification allows you to see the sample on the crystal, facilitating manipulation and accurate positioning of small samples. the Lighting Viewer has the same slip clutch, calibrated pressure mechanism as the Tilt Back Pressure Tower. The Lightning Viewer also has a "hinge" mechanism that allows the user to tilt back the pressure device back to 60 degrees and clean the crystal with ease.

Swap-Top Modules

Fiber Optics Swap-Top Module

Thermo Spectra-Tech's Infrared Fiber Optics offer sampling flexibility and diversity. FT-IR Fiber Optics give the user the unique ability to bring the sampling accessory to the sample. This is extremely useful when samples are at a remote location or when they are not the optimum shape or size to fit into the spectrometer's sample compartment. Pre-aligned fiber optic sample probes are available for ATR analysis and reflectance analysis. These sample probes are compatible with FT-IR spectrometers that have either dTGS or MCT detectors.

Features

Small sample probe diameter

Chalcogenide fibers

Very flexible fiber optic cables

Sample probes are interchangeable

Easy to clean, non-destructive sampling

Applications

Hazardous environments

Unusual sample sizes and shapes

Liquids and Solids

Acidic Samples

Restricted access sampling vessels

Skin analysis

The expected throughput of one fiber optic cable, when attached to the FiberLink Swap-Top module, should be in the neighborhood of 10% of the open beam energy at 4000 cm-1. The expected throughput of an ATR Needle-Probe should be in the neighborhood of 1.30% of the open beam energy at 4000 cm-1. The expected throughput of a Specular Needle-Probe should be in the neighborhood of 0.7% of the open beam energy at 4000 cm-1.

The actual throughput may vary as a function of your spectrometer's source collection and detector foreoptics.

Fiber Optics Swap-Top Operation

Description

The Foundation Series Fiber Optics Kit is made up of several key componets. The FiberLink Swap-Top module is a unique transfer optic that transfers IR energy. The Fiber Optic cables are made of Chalcogenide, a mid-IR transmissive (4000 – 900 cm-1) glass with chemical properties similar to AMTIR. A Patented ATR Needle-Probe or a Reflectance Needle-Probe works in conjunction with the FiberLink and the Cables to provide excellent sensitivity for the analysis of liquids, reflective materials, or coatings on solid materials.

FiberLink Swap-Top module

The FiberLink Swap-Top module is an innovative interface because it does not employ traditional beam condensing optics that have separate x-y-z position adjustment and are difficult and tedious to align. Instead, it uses non-imaging parabolic cones to bring the focused IR beam from the sample compartment to the cables making it easy to align.

Fiber Optic Cables

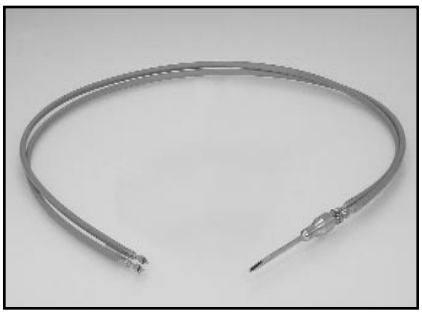

The Cables are made of Chalcogenide, which is a high throughput fiber material that transmits in the mid-infrared. The fibers are glass clad and housed in a protective polymeric covering for durability and ruggedness. Unlike other commercially available infrared fiber optic cables that are quite rigid, Thermo Spectra-Tech's cables have a very flexible bend radius to analyze difficult-to-get-at samples and to reduce the risk of breakage. The fiber optic cables come in a standard length of 1.5 meters.

Fiber Optics Swap-Top Operation

ATR Needle-Probe

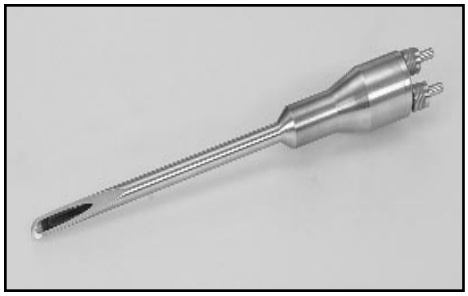

The patented (patent #5,436,454) ATR Needle-Probe utilizes ATR (attenuated total reflectance) technology to measure the infrared absorbance of liquids. The unique design of this probe allows the bent fiber (within the probe) to act as the ATR element. No traditional crystal element is needed. The ATR Needle-Probe has a sampling head that is 6.5 mm in diameter. The small diameter of the probe head allows the user to analyze samples in containers, small test tubes, and reaction vessels that have narrow necks.

Reflectance Needle-Probe

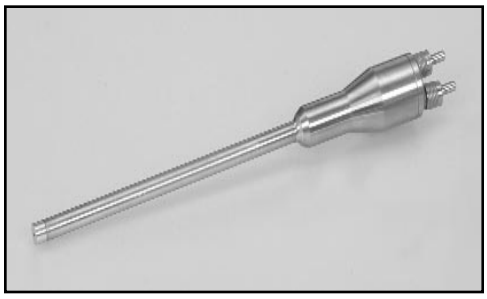

The Reflectance Needle-Probe is designed for maximum energy throughput when performing external reflectance measurements. The probe contains an input and an output fiber. The distance from these fibers to the sampling surface has been optimized for maximum sensitivity. This needle-probe can be used to analyze samples as small as 3 mm. This is ideal for difficult-to-get samples such as circuit board components, recessed sample areas, small sample containers, and large samples such as metal parts and forensic samples.

Probe Properties

	ATR Needle-Probe	Reflectance Needle-Probe
Fiber Material	Chalcogenide	Chalcogenide
Sampling Range	4000-900cm-1	4000-900cm-1
Probe Head Diameter	6.5 mm	6.5 mm
Useful Temperature Range	ambient to 60˚C	NA
Cable Length	1.5 meters	1.5 meters
pH Compatibility	1 - 9	NA

Cautions

WARNING: Avoiding the following cautions can result in permanent damage to your Fiber Optic accessory!!

- To avoid breaking the cables, do not bend cables into a radius smaller than 6 inches.
- Do not drop the needle-probes or cables, which could result in permanent damage.
- The needle-probes can be used in solutions with a pH between 1 to 9. Using the probes in basic solutions will cause irreversible damage.
- Hand tighten all connections. The use of tools may damage the ends of the probes or cables.
- Avoid touching the ends of the probes and cables with your fingers. If necessary, clean these areas with a cotton ball and water.
- Do not close the sample compartment cover on the cable, which may permanently damage the cable.
- Avoid snapping or whipping the cables, this will cause irreversible damage.
- Avoid sudden temperature changes, this may permanently damage the needle-probes.
- Avoid the use of THF (Tetrahydrofuran) and DMSO (Dimethylsulfoxide), which will damage the probes.

Fiber Optics Swap-Top Operation

Fiber Optic Cable Installation

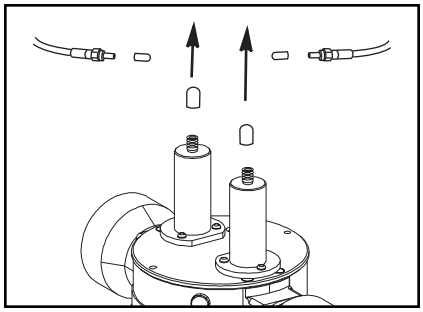

Remove the small red caps from each end of the fiber optic cable.

Remove the small caps from the two (2) ports located on top of the FiberLink Swap-Top module.

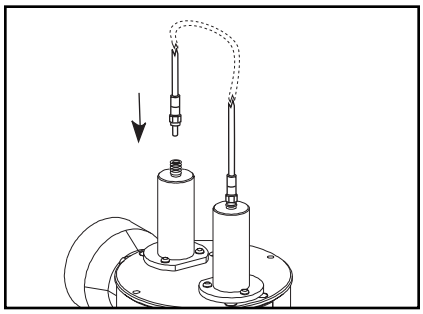

Carefully connect each end of the fiber optic cable to the ports located on top of the FiberLink Swap-Top module.

HAND TIGHTEN ONLY!

NOTE: Be certain the the cable is sitting straight on the port before tightening the connector.

CAUTION: Be very careful to ensure that the cables do not bend beyond their bending radius (6 inches).

Check the throughput of cable #1

Take a background spectrum of the spectrometers open beam.

Install the FiberLink Swap-Top module with cable #1 already connected.

Take a sample spectrum and display in % T.

Expected throughput should be in the neighborhood of 10%T as measured with a DTGS detector. Actual throughput may vary as a function of your spectrometer's source collection optics and detector foreoptics.

Check the throughput of cable #2

Repeat the above procedure for cable #2.

Fiber Optic Cable Installation

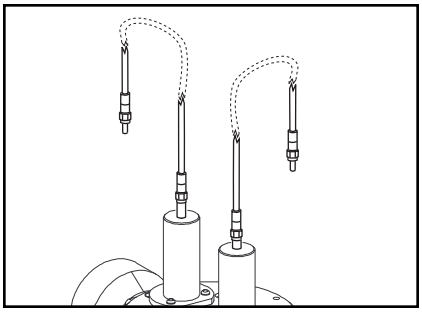

Reattach cable #1 to the FiberLink

Detach one end of cable #2 from the FiberLink (leave the other end attached to the FiberLink).

Reattach one end of cable #1 to the FiberLink.

NOTE: Be certain that the cable is sitting straight on the port before tightening the connector.

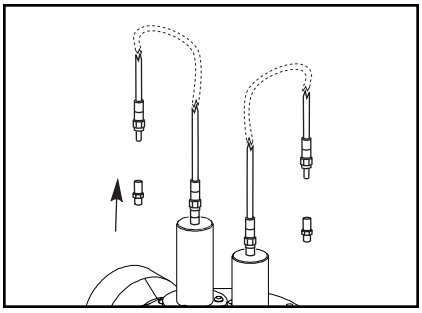

Attach the SMA connectors

Attach an SMA connector to the free ends of each cable.

ATR Needle-Probe

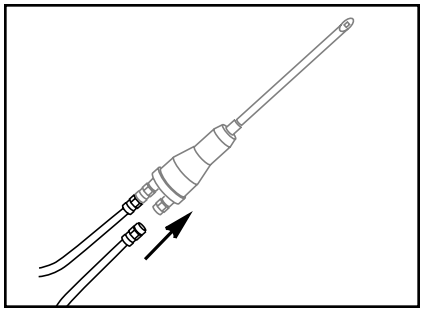

Attach the ATR Needle-Probe

Remove the plastic caps from each end of the needle-probe.

NOTE: Be careful not to touch the ends of the needle-probe.

Attach the fiber optic cables to the connections of the needle-probe.

Hand tighten the connectors. Do not use any tools to tighten the connections.

Check the throughput of the needle-probe

Use a background of the empty sample compartment as indicated on page 15.

Hold the needle-probe so that the tip is not in contact with the sample but suspended in air.

Take a sample file and display in %T. Expected throughput should be in the neighborhood of 1%T as measured with a DTGS detector

Actual throughput may vary as a function of your spectrometer's source collection optics and detector foreoptics.

Fiber Optics Swap-Top Operation

ATR Needle-Probe

CAUTION: Be very careful to ensure that the cables do not bend beyond their bending radius. Do not let the cables drop to the floor or bench.

CAUTION: DO NOT immerse the ATR Needle-Probe in a liquid with a pH > 9!

NOTE: Before collecting each spectrum check that all fiber optic connections are properly hand tightened. The connections will gradually loosen from normal movement. This effect will be visible in the spectral results as lower throughput or optical fringing in the baseline.

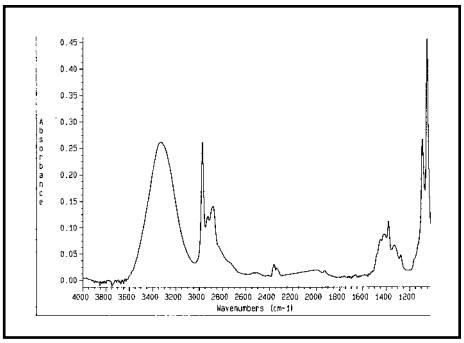

Collect the sample spectrum

Place the needle-probe in contact with the sample.

Collect the sample spectrum.

NOTE: It is necessary only for the tip of the needle-probe to touch the sample.

Important Note! The spectral region between 2300 - 2200 cm^{-1} (approximately) is completely absorbing, due to the H-Se band. This band can be computationally removed. See the spectrometer manufacturer's software manual.

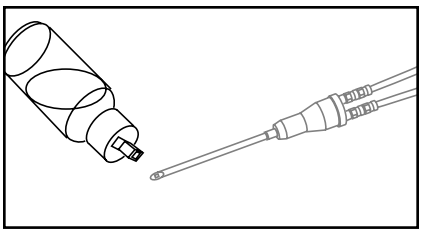

Clean ATR Needle-Probe

Use a cotton swab and a squirt bottle filled with room-temperature water to clean the ATR Needle-Probe.

CAUTION: Do not immerse the ATR Needle-Probe in running water.

Reflectance Needle-Probe

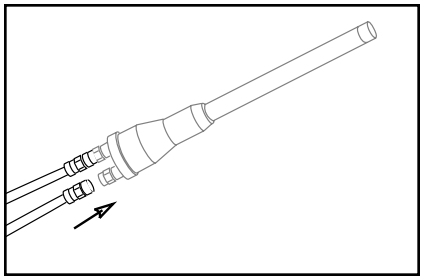

Attach the Reflectance Needle-Probe

Remove the small red caps from each end of the needle-probe.

Attach the fiber optic cables to the connectors of the needle-probe.

Hand tighten the connectors.

NOTE: Be careful not to touch the ends of the needle-probe.

Check the throughput of the needle-probe

Use a background of the empty sample compartment as indicated on page 15.

Hold the needle-probe so that the tip is in contact with the gold mirror.

Take a sample file and display in %T. Expected throughput should be in the neighborhood of 0.7%T as measured with a DTGS detector

Actual throughput may vary as a function of your spectrometer's source collection optics and detector foreoptics.

CAUTION: Be very careful to ensure that the cables do not bend beyond their bending radius. Do no let the cables drop to the floor or bench.

NOTE: Before collecting each spectrum check that all fiber optic connections are properly hand tightened. The connections will gradually loosen from normal movement. This effect will be visible in the spectral results as lower throughput or optical fringing in the baseline.

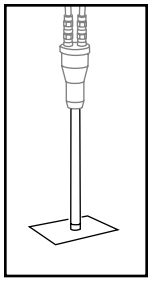

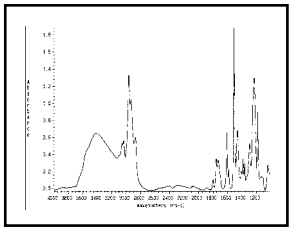

Collect the sample spectrum

Hold the needle-probe so that the tip is flat against the sample.

Collect the sample spectrum.

See Important Note regarding spectral range on the preceding page.

Clean the Reflectance Needle-Probe

Use a tissue to clean the Reflectance Needle-Probe.

Troubleshooting

PROBLEM	SOLUTION
Low Energy Throughput	1. Tighten the SMA connectors. 2. Check the spectrometer “gain” setting.
No Energy Through Detector	1. Tighten the SMA connectors. 2. Remove needle-probe, check cables for low throughput, see page 15. 3. Check for damage to the needle-probe.
Fringing in Spectra	1. Adjust the SMA connectors. If the connectors are not finger tight this may occur. 2. Clean cable and needle-probe tips with cotton ball and solvent to remove any contamination.
Poor Spectral Quality	1. Check the spectrometer, and check proper software settings. 2. Lengthen data collection time. 3. Use a different needle-probe more appropriate to the sample.

ATR Theory

Attenuated Total Reflectance (ATR) Spectroscopy is a versatile and powerful technique for infrared sampling. Since materials are normally analyzed by ATR with minimal or no sample preparation, it is a rapid technique for obtaining the infrared spectrum of a solid or liquid phase material. Materials which are either too thick or too strongly absorbing to be analyzed by transmission spectroscopy can be routinely analyzed using ATR spectroscopy. ATR is also useful when only the surface of the material needs to be analyzed.

Internal reflection spectroscopy is a common infrared technique in which the infrared radiation is passed through an infrared transmitting crystal of high refractive index, allowing the radiation to reflect in the crystal one or more times. In this way, an evanescent wave penetrates into the sample in contact with the crystal, producing a spectrum of the sample.

In a typical application of this technique, the sampling surface is held in a vertical orientation, with sample material placed on one or both sides of the ATR crystal. This orientation, however, makes it difficult to achieve uniform sample contact with the crystal surface - a necessity if you desire reproducible data. In addition, it is virtually impossible to sample many non-rigid materials, such as liquids, gels or pastes.

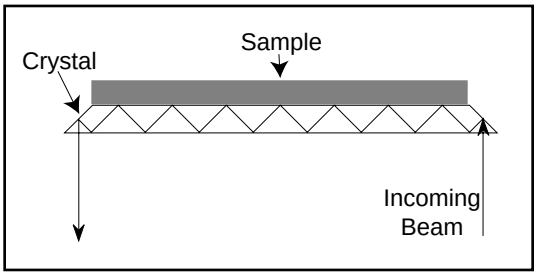

This difficulty is overcome by providing a horizontal, “face-up” sampling surface, to allow convenient sample handling of virtually all materials.

The following equation defines the effective pathlength for ATR measurements. These calculations can be used to determine the best crystal materials for specific applications.

Effective Pathlength (EPL):

EPL= No. of Reflections x Depth of Penetration (dp)

Depth of Penetration:

$$dp = \frac{\lambda/n_1}{2\pi\,[\sin^2\theta - (n_s/n_1)^2]^{1/2}}$$

λ = wavelength (cm^{-1})
n_1 = refractive index of crystal
n_s = refractive index of sample
θ = crystal face angle

In addition, users will need to verify that the sampling crystal is not soluble or otherwise damaged by the sample. If additional information is required, contact the Thermo Spectra-Tech Technical Support Center.

ATR Crystal Specifications

	Ge	ZnSe	Si	Diamond
Transmission Range (cm^{-1})	5500-675	20,000-650	8300-660 & 360-70	4500-2500 1667-33
Refractive index @ 1000 cm^{-1}	4.0	2.4	3.4	2.37
Density (g/cm^3)	5.32	5.27	2.33	3.51
Hardness (Knoop #)	1150	137	1150	7000
Useful pH range	1 - 14	5 - 9	2 - 14	1-14
Cleaning Agents	acetone*, alcohol, H_2O	acetone*, alcohol,H_2O	acetone*, alcohol,H_2O	acetone*, alcohol,H_2O
Solvents which attack material	H_2SO_4, aqua. regia	Acids, Strong Alkalies Amines	HF & HNO3	K_2CrO_7 Conc H_2SO_4
Remarks	*hard and brittle, reflection losses*	*hard and brittle, good ATR material*	*hard and brittle withstands thermal shock*	*Hard*

** Avoid long term exposure*

For a complete description of the theory of Attenuated Total Reflectance please refer to Thermo Spectra-Tech's FT-IR Technical Note #1: *Introduction to Attenuated Total Internal Reflectance (ATR) Spectroscopy*.

Caution: Note for cleaning solvents, avoid the use of ketones such as acetone and chlorinated solvents, such as methylene chloride, chloroform etc. These may attack the bonding agent.

The Multi-Reflection HATR and SpeculATR are equipped with Zinc Selenide crystals (as the standard option). ZnSe is the material of choice for many advanced FT-IR sampling technologies, having replaced KRS-5.

Please observe the following precautions to extend the operating life of your ZnSe crystal:

- Do not use ZnSe to analyze solutions containing strong acids or alkalies. The preferred pH range is 5-9.
- Do not wash or clean the crystal with solutions of strong acids, alkalies or oxidizing agents.
- ZnSe is hard, yet brittle and should not be subjected to mechanical and/or thermal shock. Do not apply undue pressure to the crystal during an ATR measurement. Do not drop the accessory/crystal or wash it in solvents at temperatures above those at which the sample has just been analyzed.
- The surface(s) of the crystal must be cleaned gently, using soft materials in conjunction with a suitable solvent. Cotton swabs or cotton balls are recommended. Surface scratches will reduce the optical throughput.
- The crystal must not be cleaned in an ultrasonic cleaner.
- Sudden temperature changes, greater than 5˚C, can damage the ZnSe crystal.

Caution: Do NOT use KimWipes™ to clean the crystal surfaces. This will cause severe scratching of the crystal surface.

Specular Reflectance Theory

Specular reflectance provides a nondestructive method for analyzing a variety of samples such as polymer coatings, painted surfaces, lubricant films, food and beverage containers, and semi-conductors without requiring any sample preparation. Specular reflectance is used to analyze bulk materials (such as some plastics), species adsorbed to reflective surfaces (such as proteins on aluminum plates), and films on reflective surfaces (Reflection-Absorption Spectroscopy).

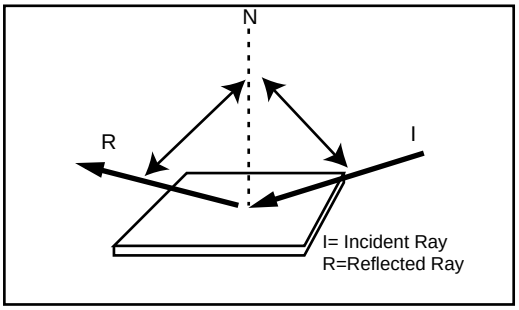

Figure 3

Specular reflectance is a mirror-like reflectance from the surface of the sample. Samples are placed horizontally on the top surface of the SpeculATR accessory. The infrared radiation is directed onto the surface of the sample at a 45° angle of incidence (angle of incidence = angle of reflectance). Refer to Figure 3.

For additional information on specular reflectance, please refer to Thermo Spectra-Tech's FT-IR Technical Note #3: *External Reflectance Spectroscopy of Surfaces.*

Notes

Thermo Spectra-Tech

Empowering Your FT-IR

A Thermo Electron business

www.thermospectra-tech.com
info@thermospectra-tech.com

Thermo Spectra-Tech
230 Long Hill Cross Rd.
PO Box 869
Shelton, CT 06484-0869

Phone: 203-926-8998
800-THE-FTIR
FAX: 203-926-8909