Installation and User Guide

PIKE TECHNOLOGIES

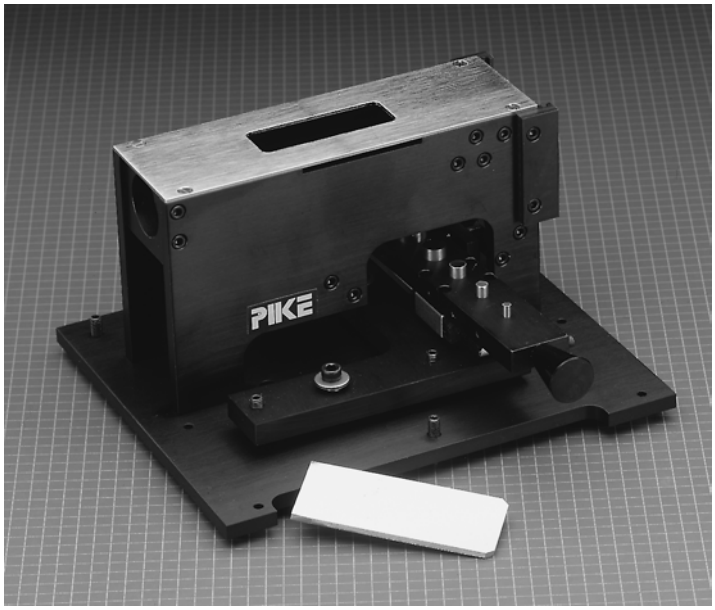

AGA

Advanced Grazing Angle Accessory

Address Comments to:

PIKE Technologies, Inc.
2919 Commerce Park Drive
Madison, WI 53719

Part Number **350-015002**
Release **April 1996**

INTRODUCTION

In the manufacture of magnetic disks, fluorocarbon lubricants are applied to the disk surface. This lubricant layer is used to reduce head wear during operation and to reduce friction during start up and landing of the head. Knowledge of the thickness of the lubricant layer is critical in predicting disk performance. An excess or shortage of lubricant can adversely affect disk drive life. Application of the lubricant to the disk surface is commonly done by spinning. Although this produces a very thin lubricant layer, the thickness of this layer may vary over the surface of the disk. It has been demonstrated that storage of the disks on edge can cause a significant variation in lubricant thickness across the disk, the layer being thin at the top and thick at the bottom[1]. Not only must the overall lubricant thickness be determined, but it is also useful to be able to map variations in the lubricant thickness across the disk.

A common method for the non destructive measurement of this lubrication layer is by performing an infrared specular reflectance analysis[2]. The analysis in complicated somewhat in that the lubrication layer is not placed on the metallic disk surface but over the magnetic medium. The lubrication layer is also very thin, its thickness being much less than the wavelength of the light used for analysis. Greenler[3] has shown that the sensitivity of a measurement of a thin film on a reflecting metallic substrate can be significantly enhanced by performing the analysis at a grazing angle using light that has its E vector perpendicular to the plane of incidence (parallel polarization).

This accessory has been designed to overcome the deficiencies of existing grazing angle accessories. The size and shape of the spot on the sample is circular and is defined by the optics contained in the accessory. The optical design has been optimized for maximum throughput so that good spectra may be obtained from very small samples

OPTICAL PATH

The key element of the advanced grazing angle accessory is the pin mirror assembly. Five mirrors are mounted onto a slide which has a detent for each mirror. The diameters of the mirrors are 1/2", 3/8", 1/4", 3/16", and 1/8". By moving the slide, one of these pin mirrors may be moved into the beam path.

The beam from the spectrometer is focussed onto the pin mirror. The angle of incidence of the beam onto this mirror is equal to eighty degrees. The beam that is reflected from this mirror is imaged at unit magnification onto the sample, striking the sample at the same eighty degree angle of incidence. Thus the area of the sample that is illuminated is equal to the size of the circular pin mirror.

The reflected beam from the sample passes through a prism which redirects the beam to the detector.

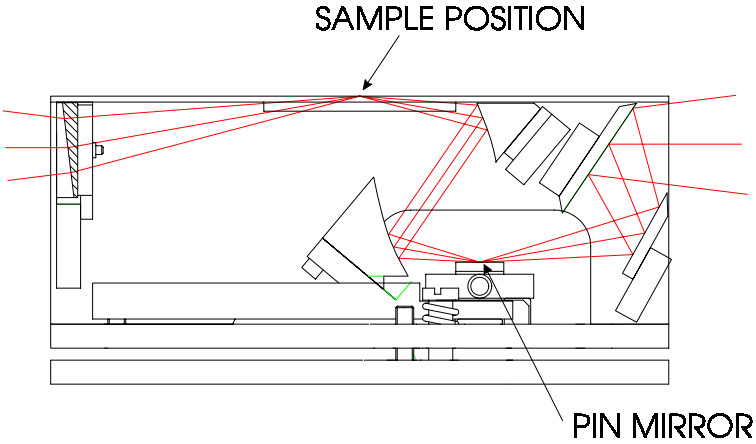

Figure 1

ALIGNMENT

The Advanced Grazing Angle Accessory has been pre-aligned. The only alignment necessary is the positioning of the accessory in the FTIR sample compartment and adjustment of the height and tilt using the set screws on the accessory plate.

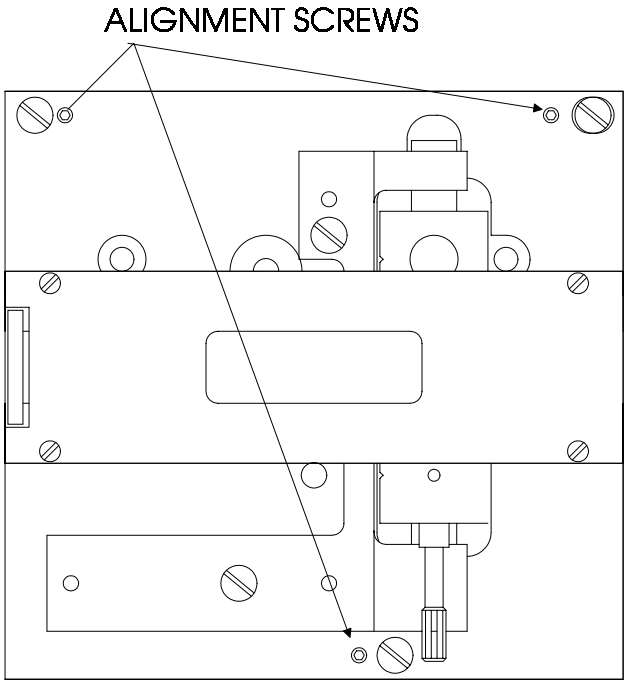

1) Insert the accessory into the FTIR sample compartment.

2) Enter the alignment mode or energy throughput mode of the FTIR software.

3) Set the detented slide for the center mirror (1/4") and place the alignment mirror provided on the top sample surface.

4) While monitoring the size of the signal, adjust the three set screws shown in above for height and tilt until maximum throughput is achieved.

HARD DISK ANALYSIS

For the analysis of large disk platters, such as the popular 5.25 inch disk drives, a useful map of the lubricant thickness over the surface of the platter can be made using a simple eighty degree reflection accessory, even with an elliptical sampling area which is almost two inches long. Over the past few years the size of disk drives has steadily decreased while the capacity of the drives has increased. One of the common sizes of disk platters at the moment is 48mm diameter. The use of a traditional grazing angle accessory for the analysis of these platters is not acceptable due to the large size of elliptical spot illuminated on the surface of the disk. Good spatial resolution is not possible and at most positions on the disk the spot actually falls off the surface of the disk, resulting in a loss of quantitation.

For a spectrometer with a 8mm diameter focus at the sample position the theoretical throughput of the device is given by:

$$\frac{\text{Area of pin mirror}}{\text{Area of elliptical spot illuminating pin mirror}}$$

The Advanced Grazing Angle accessory is capable of measuring even the smallest disks with a good spatial resolution and exceptional signal to noise. Films of the order of 20 angstroms thick may be measured to an accuracy of better than one angstrom.

The spectrum shown is of a lubricated disk, ratioed to an unlubricated disk. The lubricant thickness of this sample was 18 angstroms. Sixteen scans were coadded at a resolution of eight wavenumbers using an MCT detector. The spot size was 1/8 inch diameter.

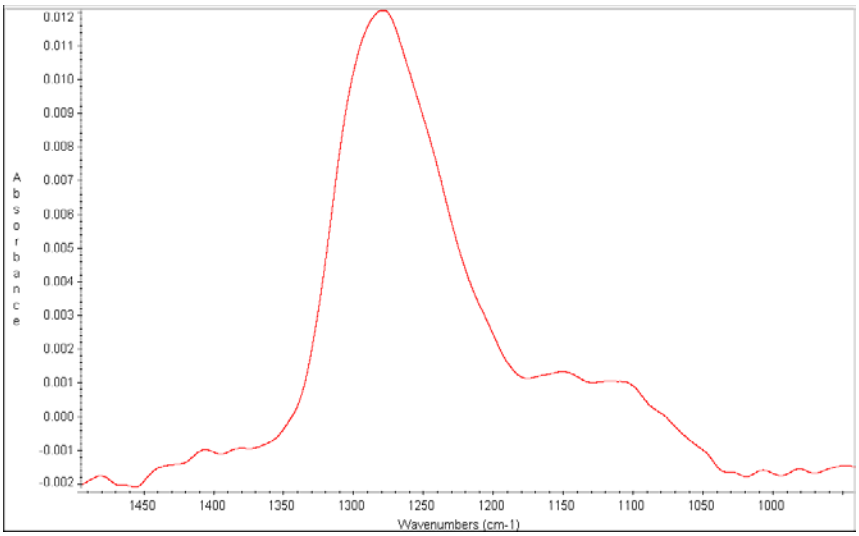

PRECAUTIONS

MIRRORS

In order to provide the maximum transmission in the infrared, with the minimum spectral interferences, the mirrors used in this device are uncoated (bare) aluminum on glass substrates. Since the coatings are soft, care must be taken to avoid damage. Normally, these mirrors will not need cleaning, since they are contained within the housing of the accessory. If they do need cleaning, they may be gently wiped with a lint free, abrasive free cloth, such as lens tissue, or with a camel hair brush. Under no circumstances must the mirrors be rubbed with paper products such as "Kleenex" since this will produce scratching of the mirror coating.

PACKING LIST

The Advanced Grazing Angle Accessory is provided with the following:

Advanced Grazing Angle Accessory.
Gold Alignment Mirror.
Balldriver Hex Set.
Manual.

REFERENCES

1. K. Nishikida, Automated Mapping Hard Disk Checker for LubricantThickness Determination, Paper No. 779 presented at Pittcon 1992.
2. F. Walder Nicolet Application Note 8313.
3. R. G. Greenler, J. Chem. Phys. 44, 310 (1966).