INSTRUCTION MANUAL

Continuous Flow Rotor for Thermo Scientific Sorvall Preparative Ultracentrifuges (WX and Discovery SE series)

TCF-32

Before using these rotors, please carefully read this instruction manual and the centrifuge instruction manual for its efficient operation and for your safety.
Keep this instruction manual for your reference and refer to it as required.

June 2009
S99919810K

• The exterior or specification of this product is subject to change for improvement.

⚠ Safety Reminder

・Centrifuge rotors rotating at high speed have considerable potential for damage to personal properties if used improperly.
For safe and proper use of this rotor, carefully read the centrifuge instruction manual and this rotor instruction manual before use and observe the instructions.

⚠WARNING: and ⚠CAUTION: notes are used to call your attention in this manual to prevent personal injury or damage to the rotor and the centrifuge.
These notes are defined as follows.

⚠ WARNING: indicates a potentially hazardous situation which, if not avoided, could result in personal severe injury or possible death.
⚠ CAUTION: indicates a hazardous situation which, if not avoided, could result in personal injury or severe damage to the instrument.

⚠ WARNING

- Never use any material capable of producing flammable or explosive vapors. Your centrifuge and rotor have no explosion-proof construction.
- Your centrifuge and rotor are not designed to confine any sample particles dispersed due to leakage. Therefore, when using toxic or radioactive samples or pathogenic or infectious blood samples, make sure to prepare necessary safety measures at your own responsibility.
- Never exceed the maximum speed of the rotor (mentioned on the rotor body).
  Always reduce rotor speed as instructed in this manual when rotor speed is limited due to sample density, kinds of tubes, etc.
- Check the chemical resistance chart provided with the rotor, and do not use any sample inapplicable to the rotor. Using such a sample could corrode the rotor.
- Do not remove the overspeed decal from rotor, or replace it with the decal for another rotor. The decal is critical component that detects the overspeed of rotor. If a decal that is not compatible with the rotor is attached, the rotor could break, resulting in damage to the centrifuge.

⚠ CAUTION

- Check the chemical resistance chart provided with the rotor, and do not use any sample inapplicable to the rotor components. Using such a sample could deteriorate them.
- The allowable speed may be lower depending on the density of sample. Refer to this instruction manual.
- Do not rotate this rotor at a speed of more than 3,000 rpm unless all components including seal attachment assembly are assembled.
  If the above cautions are not observed, shaft (D2) could be bent or broken.
- Do not rotate this rotor at a speed of more than 3,000 rpm unless the rotor is filled with liquid.
  If the above cautions are not observed, the core could be damaged.
- Clean the inside of the drive hole (crown hole) of the rotor and the surface of the drive shaft (crown) of the centrifuge once a month. If the drive hole or the drive shaft is stained or any foreign matter is adhered, the rotor may be improperly installed and come off during operation.
- Inspect and maintain the rotor after use. If abnormality is observed, do not use it.
  Contact Thermo Fisher Scientific or an authorized Thermo Fisher Scientific Representative.

CONTENTS

Precautions on handling rotor

■ Do not spin a rotor beyond the allowable speed. ○The maximum speed marked on a rotor refers to an allowable one when the maximum density of the sample or density gradient solution is less than 1.2. ○When a sample or density gradient solution of more than 1.2 in maximum density is used, the maximum speed must be reduced according to the instruction manual for the rotor. ○Upon reaching the end of the service life of a rotor specified in its instruction manual, the allowable speed should be reduced by 10%.
■ Set a rotor gently and securely onto the drive shaft (crown). ○Practice setting repeatedly to acquire the knack.
■ Confirm that the rotor is free from corrosion and scores. ○If white corrosion is recognized on the bottom of this rotor, immediately stop using it and contact Thermo Fisher Scientific or an authorized Thermo Fisher Scientific Representative. ○When operation is over, store the rotor after cleaning and drying.
■ Make it a practice to keep a logbook for rotors. ○Keeping a logbook for rotors is indispensable for controlling the life or when the warranty clause is involved. Keep the logbook up to date and store it properly.
■ Do not rotate this rotor at a speed of more than 3,000 rpm unless all components (rotor assembly, seal attachment assembly and lubricating unit assembly) are assembled. Do not rotor at a speed of more than 3,000 rpm unless the rotor is filled with liquid. If the above cautions are not observed, shaft (D2) could be broken or the core could be damaged.
■ Always ground the ultracentrifuge, lubricating unit and low temperature circulating water cooling bath before use.
■ Be sure to read article on 9. MAINTENANCE.

⚠ WARNING:

●Do not remove the overspeed decal from rotor, or replace it with the decal for another rotor. The decal is a critical component that detects the overspeed of rotor : If a decal that is compatible with the rotor is attached, the rotor could break, resulting in damage to the ultracentrifuge.

⚠ CAUTION:

●Take great care not to scratch the overspeed decal: Any scratch on decal will make the rotor unusable. To prevent the decal from being scratched, store the rotor with overspeed decal, using the stand provided with the rotor (rotor stand for protecting decal). If the decal is scratched, immediately stop using rotor and contact Thermo Fisher Scientific or an authorized Thermo Fisher Scientific Representative.

●If foreign matter adheres to the overspeed decal, wipe it off promptly. Otherwise, the rotor can not be used.

1. PREFACE

We have developed a continuous flow rotor which permits sizable processing with samples allowed to flow continuously. Utilize this continuous flow rotor of high performance and reliability for your studies or processing.

2. SPECIFICATIONS

Table 1 shows the specifications of this continuous flow rotor.

Table 1 Specifications

Type of Rotor	TCF-32
Max. speed	32,000 RPM
Max. centrifugal force	101,685 X g
K factor	42
Total capacity	430 ml
Maximum flow rate	150 ml/min (9 l/hr)
Sample pH range	pH 4~10
Weight	14.5kg
Maximum Dia. of rotor	24 cm
Supply power for lubricating unit	AC 100-240V, 1A (50/60Hz)

NOTES

For operation of Model TCF-32, the following apparatus are required besides the standard configurations of Model TCF-32 and Preparative Ultracentrifuge, which have to be prepared for installation of Model TCF-32 at customer's site.

1. Sample Loading Pump
   Specifications
   Flow rate: Has to be as fast as operating flow rate required for separation of samples.
   Exhaust pressure: More than 0.147MPa(1.5kg/cm^2).
   Model without pulsating motion is recommended.
2. Low Temperature Circulating Water Cooling Bath
   Cooling capacity: More than 0.35kW(300 Kcal/hr) (water temp. at 5°C)
   (Refrigerator: as strong as 300W)
   Circulating Pump
   Flow rate: More than 1 l/min (pressure: .0.05-0.1MPa (0.5-1 kg/cm^2)).
   (Check not only the flow rate but also the pressure (0.05-0.1MPa).)
3. Density Gradient Pump
   Required for density gradient separation.

⚠ CAUTION : Check the pressure in the tube that is connected to the low temperature circulating water cooling bath. If this pressure is not proper value (proper value: 0.05-0.1Mpa), proper operations can not be performed. Take care so that the pressure does not occur in the tube from the lubricating unit to the low temperature circulating water cooling bath, when solution flows to the low temperature circulating water cooling bath.

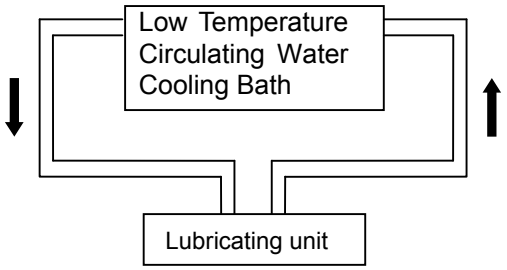

Take care so that the pressure does not occur in the tube, when solution flows to the low temperature circulating water cooling bath.

3. COMPOSITION

Fig.1 shows the overall construction

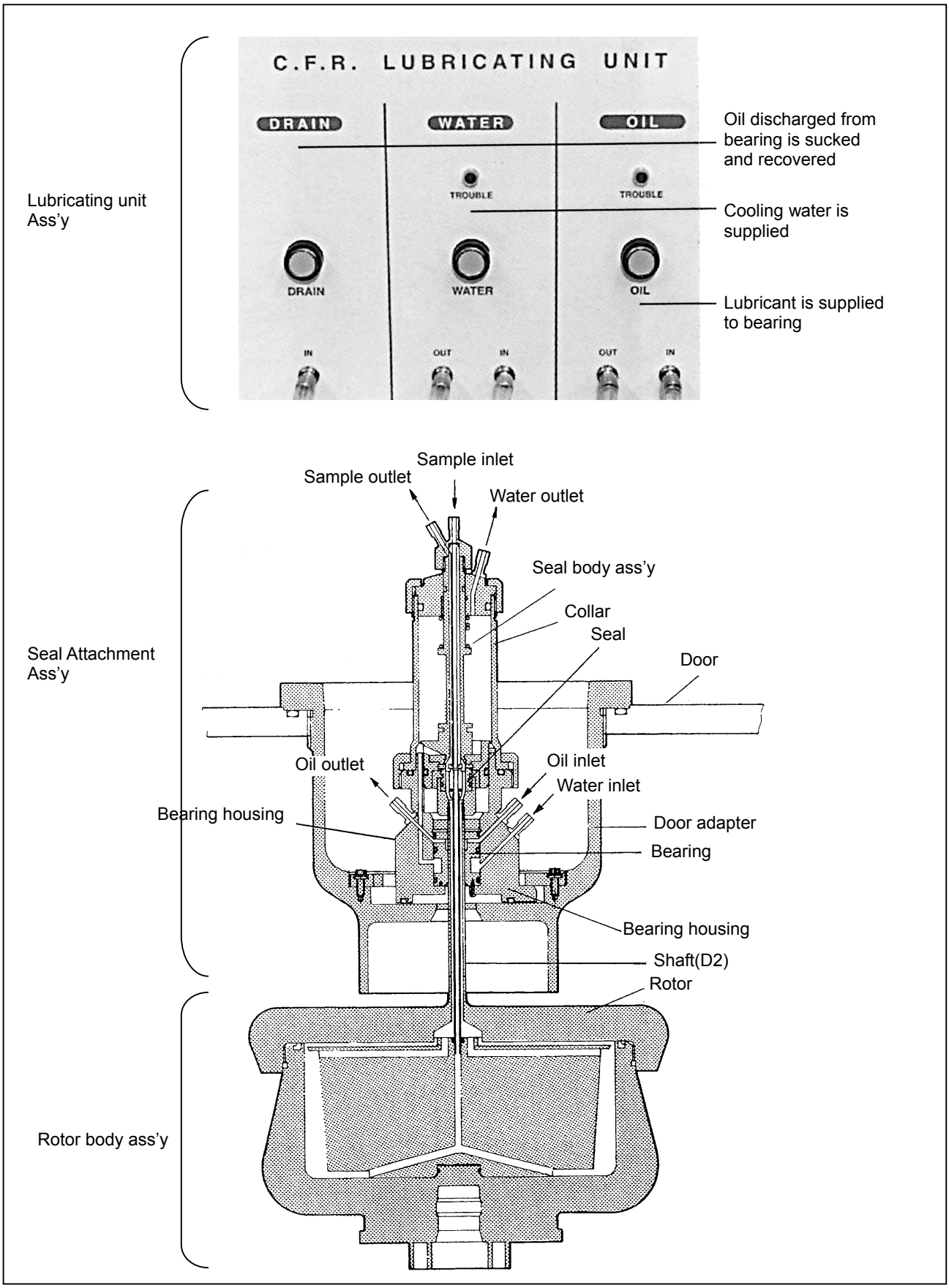

Fig.1 Overall construction

3.1 Rotor body assembly

(1) Rotor and cover

The rotor and cover are made of titanium alloy which is excellent in mechanical strength and corrosion resistance, and is coated in black (see Fig.2)

(2) Core titanium sleeve and blades

All of them are introduced in the rotor. The core forms a passage of sample and density gradient solution in the rotor. Its material is Noryl.

The titanium sleeve is for reinforcing the core, and is put on the outside of the core. It is made of titanium alloy.

The blades are for preventing the sample and density gradient solution in the rotor from whirling up. It is made of Noryl.

(see Fig. 3)

Fig. 2 Rotor body assembly

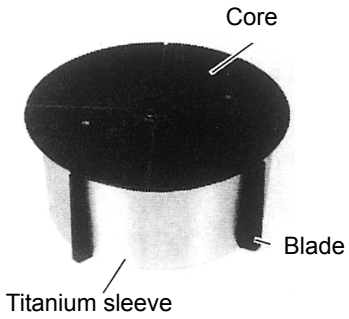

Fig. 3 Core, titanium sleeve and blades

(3) Shaft(D2) and nut

The shaft(D2) is made of titanium alloy. The section sliding with the bearing is coated with molten tungsten carbide to improve the wear resistance.

The nut is made of stainless steel. It fastens the shaft(D2) on the cover (see Fig. 4)

Shaft(D2) is a critical component. Be careful of handling it so that it is not bent, etc.

(4) Seal tube head and seal

The shaft area of seal tube head is inserted in the (polyphenylene oxide resin). shaft up to the core, and serves as a passage for sample etc. It is fastened on the shaft with left hand threads. The material is stainless steel. The seal is mounted on the top of the seal tube head. It is an important component in charge of letting in and out sample, etc. to and from spinning rotor. The employed material is polyimid resin whose sealability is excellent at a high peripheral speed (see Fig. 5 and 6).

Fig. 4 Shaft(D2)

Fig. 5 Seal tube head

Fig. 6 Seal

3.2 Seal attachment assembly

(1) Door adapter

It is screwed in the door of the ultracentrifuge, and supports the entiere seal attachment (see Fig. 7).

(2) Bearing housing

The bearing housing holds the bearing made of white metal, and is engaged with the rotor shaft(D2). It is supplied with lubricant and cooling water from the peripheral connector (see Fig. 8).

Fig. 7 Door adapter

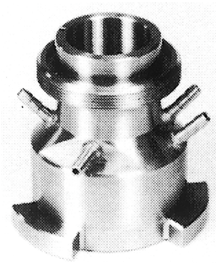

Fig. 8 Bearing housing

(3) Seal body assembly, collar and screw sockets

The seal body assembly consists of seal piece which is in contact with the rotor seal and transfers sample, etc., pipe, spring, manifold and connector. The seal body assembly is pushed against the seal by the spring. As for materials, the seal piece is made of tungsten carbide and others are made of stainless steel.

The collar which is made of stainless steel is put on the outside of the seal body assembly, and seals the cooling water which cools the seal body assembly.

The screw sockets (A) and (B) fasten the seal body assembly and collar (see Fig. 9 and 10).

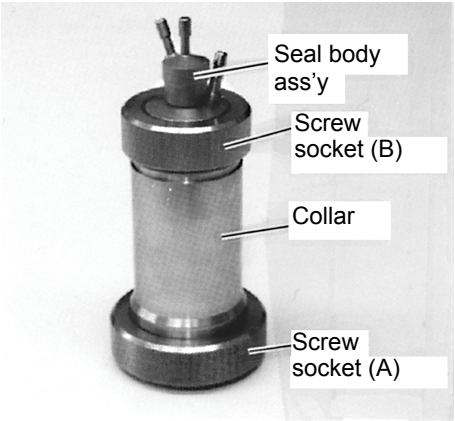

Fig. 9 Assembly of seal body Assembly, collar and Screw sockets

Fig. 10 Seal body assembly

3.3 Lubricating unit assembly

The lubricating unit assembly is used when operating this continuous flow rotor.

The specification and operation procedure of this unit are as follows.

(1) Specification

Item	Specification	Remarks
1. Lubricating oil supply flow rate	80 ± 20 ml/min	● For the seal attachment assembly lubrication
2. Drain suction pressure	81 kPa (The pump simple substance pressure).	● For the DRAIN collection
3. Malfunction detection	● Lubricating oil flow detection (The pressure detection formula) ● Cooling water flow detection (The pressure detection formula)	● It is an extraordinary caution when Lubricating oil doesn't flow. ● It is an extraordinary caution when cooling water doesn't flow.
4. Malfunction warning	There is a warning in the electronic buzzer.	
5. The container	The glass bottle of 500 ml For lubricating oil and the waste oil	
6. Noise	60 dB (A scale)	● 1 m of the front
7. Input power	● Input power : AC 100-240V, 50/60Hz ● Inner supply voltage : DC 12V, 4.17A max.	● It uses AC adapter
8. Size	273 X 318 X 219	
9. Weight	10.8 kg	

(2) Function

Lubricating unit assembly works as follows.

- Supplies lubricating oil to seal attachment assy.
- Sucks and recovers waste oil discharged from the bearing housing assembly.
- Detects a malfunction when there is trouble in the supply of lubricating oil or cooling water.
- When this safety device activates, solve the problem quickly.

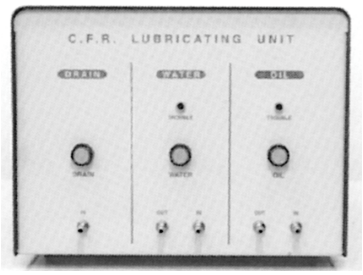

Fig.11 Lubricating unit

(3) Operation and the maintenance

1) The lubricating unit assembly is mounted on the centrifuge .

2) The power of this unit is 100-240 V of single-phase AC.
Please, connect the plug of the AC adapter with it.

3) Supply lubricating oil (P/N 463152) to the OIL bottle for lubricating oil by about 400 ml.
Check lubricating oil quantity every time it uses.
If becoming below the half of the bottle, replenish.

4) The switch of the control panel has the following function.

- The OIL switch is the ON-OFF switch of the lubricating oil pump.
  Also, it is the ON-OFF switch of the lubricating oil flow abnormal detection equipment.
  When the flow of lubricating oil stops, it informs in the buzzer sound.
  When making this switch OFF, the buzzer sound stops.
- The WATER switch is the ON-OFF switch of the cooling water flow abnormal detection equipment. When the flow of cooling water stops, it informs in the buzzer sound.
  When making this switch OFF, the buzzer sound stops.
- The DRAIN switch is the ON-OFF switch of the waste oil suction pump.
- Please check the waste oil quantity of the DRAIN bottle after operation.

The operation procedure of each switch is being explained at this instruction manual.

When operating a rotor, operate according to them.

3.4 Tools and accessories

Applications of the tools and accessories are enumerated below:

Table 2

PARTS NAME	USE
a. Rotor base	tightens and removes rotor cover
b. Handle	tightens and removes rotor cover
c. Torque wrench	installs and removes shaft
d. Handle	installs and removes door adapter
e. Screwdriver	fastens bearing housing
f. Stopper (B)	prevents bearing housing from rotating
g. Seal tube head setter	tightens and removes seal tube head
h. Seal extractor	detaches seal
i. Core setter	extracts core
j. Pressure gage	supervises sample injection pressure
k. Clamp	changes over pipe passage
l. Watchmaker' s screwdriver	removes O-ring
m. Silicone grease	maintains rotor body
n. Lubricant for screw	lubricates screw
o. Rotor stand	rotor storing stand

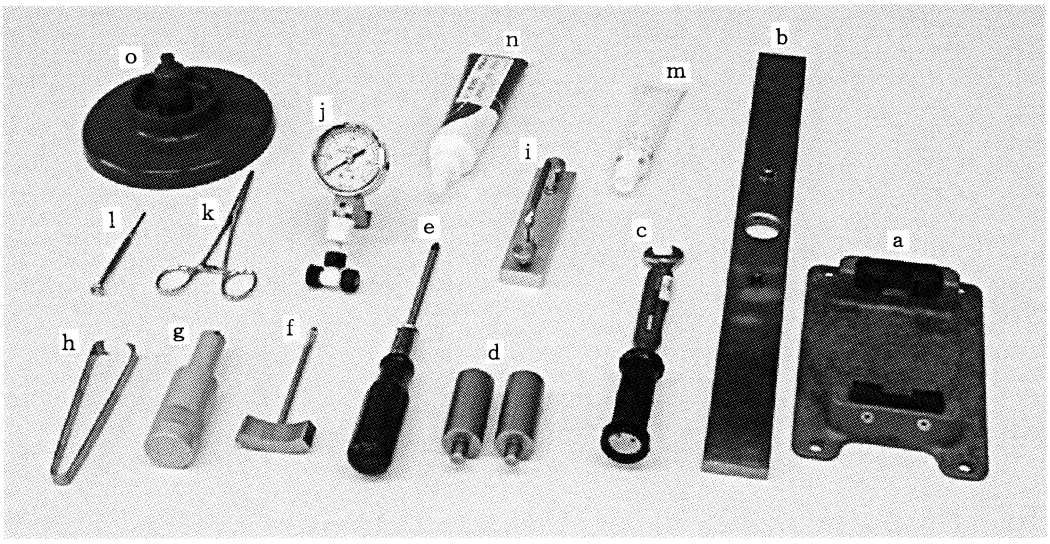

Fig. 12 Tools and accessories

4. USAGE

4.1 General description on usage

The continuous flow rotor is employed in the following manner :

Table 3 Separation procedure

Procedure / Item	Injection of density gradient solution, buffer solution	Centrifugal separation	Recovery
Solution flow	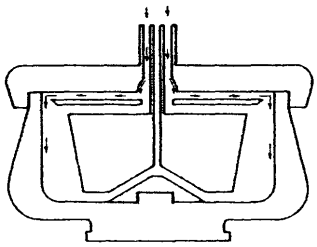	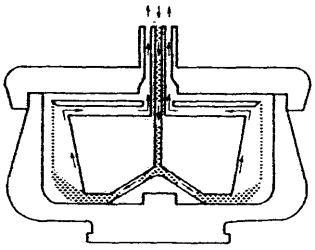	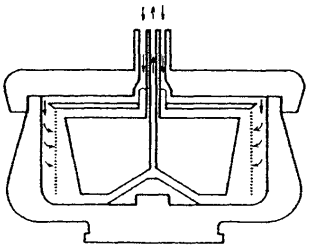
Spinning speed	3,000 rpm	Specified speed	3,000 rpm
Density gradient centrifugation	Inject density gradient solutions from lighter ones	Continuously inject sample at specified flow rate	Inject high density extrusion solution, and recover separated solution
Pelleting	Inject buffer solution		Stop and disassemble rotor, and recover

⚠CAUTION: This rotor should never be spun at a speed over 3,000 rpm unless all the parts such as rotor assembly, seal attachment assembly and lubricating unit assembly are mounted in place and also with the rotor not filled with the liquid.
If these cautions are not observed, shaft(D2) could be broken or the core could be damaged.

4.2 Usage

■ Be careful of the following to separate the sample at low temperatures.

- ○ Assemble the rotor body assembly and precool it in a low-temperature chamber, etc.
- ○ Inject the cooled buffer solution and density gradient solution.
- ○ Precool the sample and inject it while cooling the sample container using ice or in a low-temperature chamber, etc. during separation.

4.2. 1 Preparation of rotor

1 Install the seal packing and metal ring on the rotor. Also mount the O-ring on the boss on the rotor bottom.

- ○ Make sure the seal packing, O-ring, etc. are free from scratches, and apply a thin coat of vacuum grease on them.
- ○ For installation of the seal packing and metal ring, refer to the magnified figure.
- ○ Make sure the rotor and cover are free from cracks or the like which is a symptom of material fatigue.

⚠ WARNING: Do not remove the overspeed decal. (stripe ring mounted on rotor bottom).

⚠ CAUTION: Since O-ring and seal packing which are used in the rotor or the connecting portion of the seal section will come into contact with sample, always rinse them before use.
When these parts are replaced, some residue generated when rubber was formed may remain on the surfaces of new parts:
Rinse them away before use.

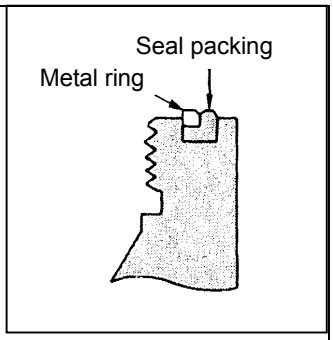

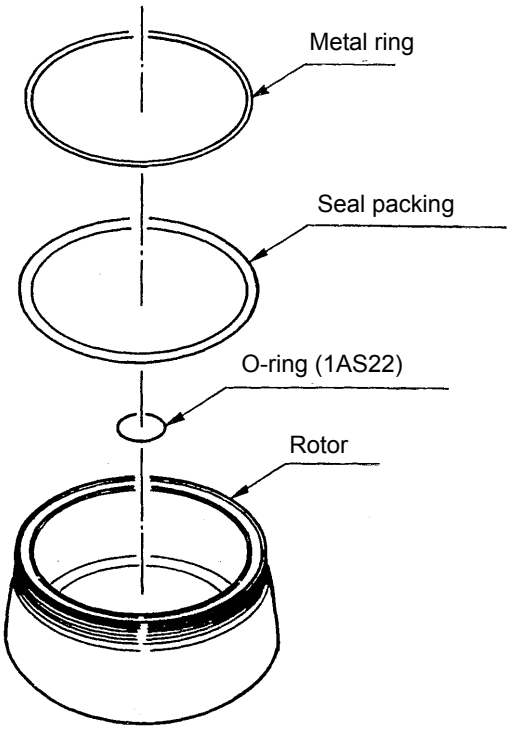

2	Mount the core, titanium sleeve and blades. ○ Make sure the three types of O-ring are free from scratches. Apply a thin coat of vacuum grease on them before installation. ○ Put the blades on the pins on titanium sleeve. ○ Position the sample outlet hole in the core and the titanium sleeve in relation to each other as shown below. 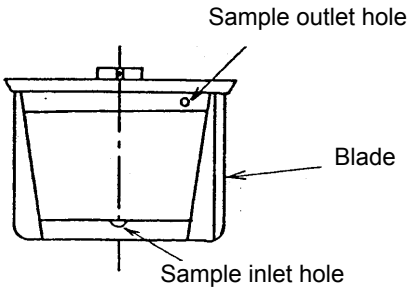 	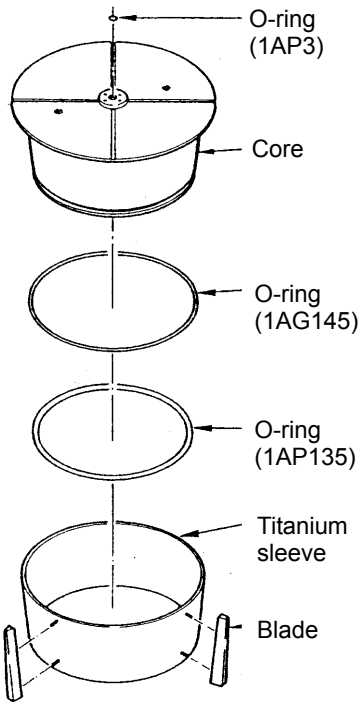
3	Introduce in the rotor the assembly of core, titanium sleeve and blades.	 

4	Mount the rotor on the Rotor base, put on the cover, and tighten by the furnished handle. ○ Tighten the cover above the match point (see right figure) of the match marks of rotor and cover.	 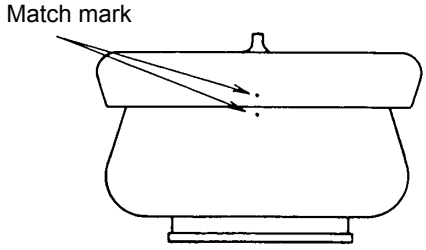
5	Insert the shaft(D2) assembly into the hole located at the center of the cover. ○ Make sure the O-rings are free from scratches, and apply a thin coat of vacuum grease on them. ○ The shaft(D2) can be introduced 15 mm in the cover. <u>Put it in until it is held against.</u> ○ Two O-rings are used, on the top and bottom ends of the shaft(D2). O-ring type { Top: 1AS5 Bottom: 1AP4	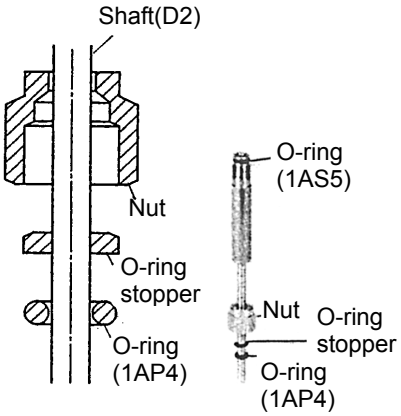 
6	<u>Sufficiently tighten the nut until the clutch of the torque wrench functions.</u> ○ It functions at 5 N·m 〔51kgf·cm〕.	

4.2.2 Preparation for spinning

1	Remove the door hole cover of the ultracentrifuge , turn on the POWER switch, and open the door. ○ To remove the door hole cover, use the door hole adapter handle and turn the door hole adapter handle counterclockwise. If you mount the core setter to the door hole cover, you can hold up the door hole cover easily.	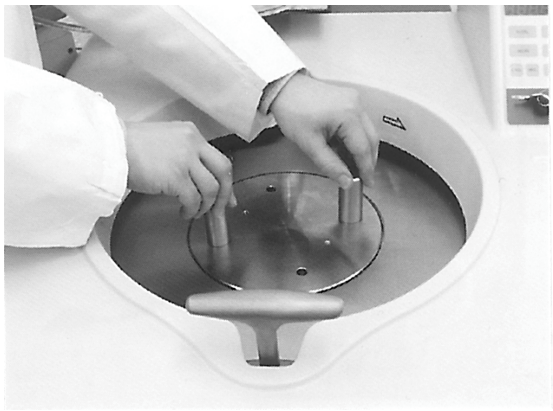
2	Install the rotor gently on the spin shaft.	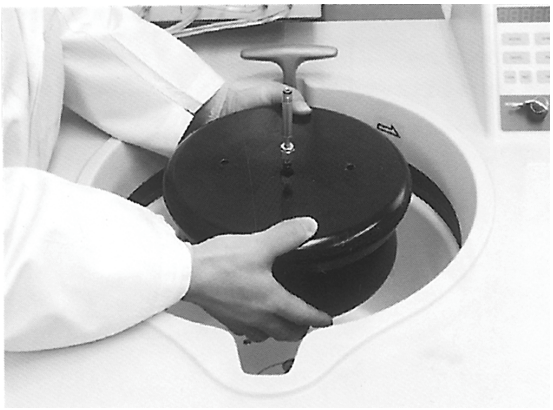
3	Close the door. ○ Apply a thin coat of vacuum grease on the door seal O-ring, and mount it back in position.	

4	Mount the door adapter. ○ Use the handle and screw in clockwise to mount. Tighten until the O-ring is compressed enough. ○ Check that shaft(D2) of the rotor is positioned approximately at the center of the center hole of the door adapter. (Adjust the door position so that shaft(D2) of the rotor can be positioned approximately at the center of the center hole of the door adapter.) If the eccentricity is too great, the door may have been set to the incorrect position. Return to step 3 and close the door firmly.	
5	By means of the furnished screwdriver, loosen 2-3 turns six setscrews for stopper (A) of door adapter.	

6	Connect the cooling water tube, oil circulation tube and waste oil (drain) to the bearing housing. Refer to the figure below for connections. 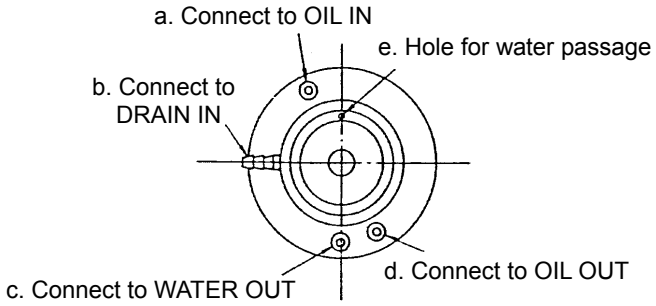 	
7	Put the bearing housing gently on the rotor shaft until the bottom surface of the bearing housing touches the door adapter. Then turn about 60° to engage the stopper with the door adapter in such manner that the water passage faces the rear of the centrifuge. Position the bearing housing at the center of the door adapter.	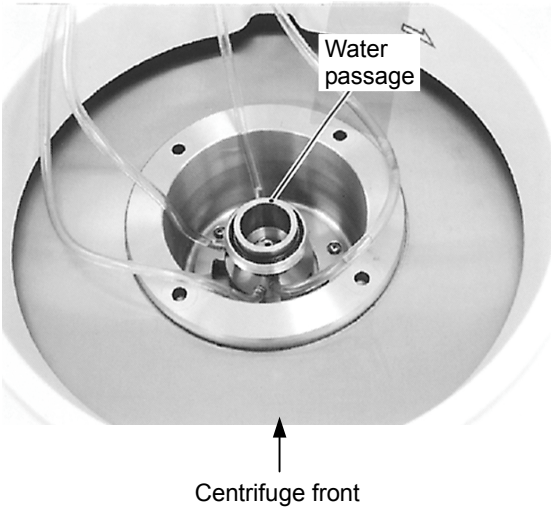
8	Position the bearing housing stopper (B) which prevents the bearing housing from turning in the gap between the bearing housing and door adapter. Position the stopper (B) where the both sides of the stopper (B) does not touch the bearing housing and door adapter.	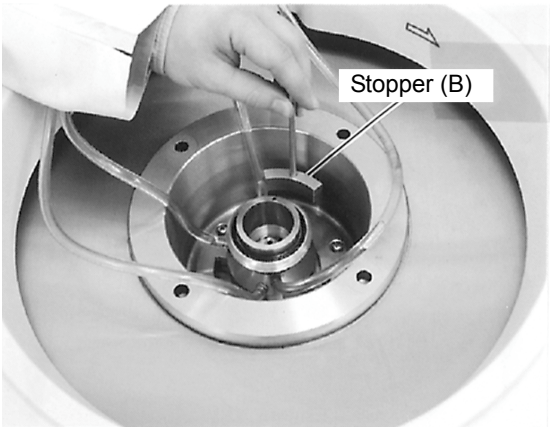

9	1) Turn on the OIL switch of the lubricating unit. Lubricant will circulate. (If the buzzer sounds and the TROUBLE lamp has lit, the oil level in the oil tank is poor or the pump is faulty.) 2) Set the operation mode to ZONAL, set the speed to 1,000 rpm, and press the start switch to start the rotor. If an abnormal sound is heard or abnormal vibrations occur during acceleration, release the ZONAL mode immediately to slow down the rotor. Inspect the assembled state of the bearing housing and rotor shaft and the bending of the shaft, and correct If required. 3) Wait for 10 seconds after the rotor attains a speed of more than 1000 rpm and then turn on the VACUUM switch to vacuumize the rotor chamber. 4) After 30~60 seconds, cancel the ZONAL mode and stop the rotor. ⚠ CAUTION: For the ZONAL operation, refer to the centrifuge instruction manual.	
10	Using the screwdriver, tighten the six stopper (A) setscrew loosened in 5.	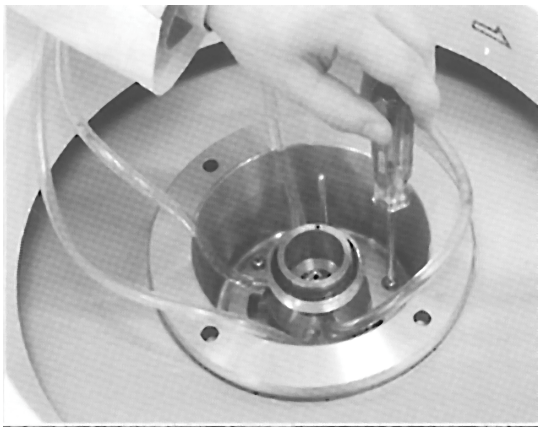
11	Insert the seal tube head on the shaft and, using the furnished seal tube head setter, <u>tighten it by rotating counterclockwise (left hand threads) until the rotor turns together.</u> <u>Then stop the rotor slowly.</u> Rotate the seal tube head slowly by the tube head setter clockwise. At this time, check whether the rotor and the seal tube head turn together. If the rotor does not turn together, rotate the seal tube head counterclockwise again until the rotor turns together. If the rotor and the seal tube head turn together when you rotate the seal tube head clockwise slowly, rotate the seal tube head setter counterclockwise while the rotor turns clockwise and tighten the seal tube head securely. Repeat these procedures three or five times to tighten the seal tube head securely.	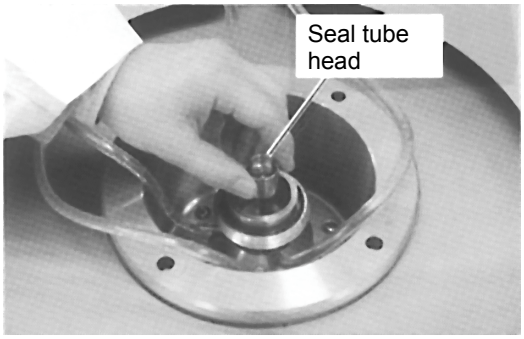 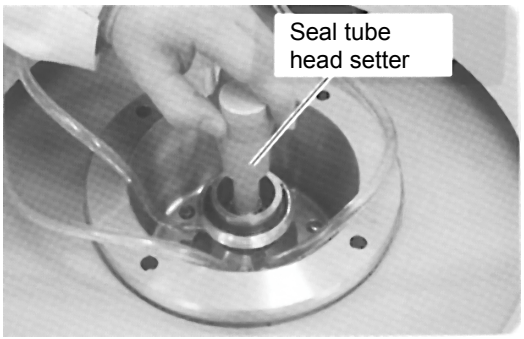

12	Push the seal (apply a thin coat of vacuum grease on two types (1AP3, 1AP14) of O-ring) on the top end of the seal tube head by fingers. (out of two grooves provided on the outer periphery of the seal, the upper one is not for O-ring but for introducing the top end of the seal extractor when removing the seal.) ○ The top end of the seal is an important section which prevents the liquid from leaking. If this end is damaged, a defect such as a leakage of liquid will occur. Take great care when handling this section.	 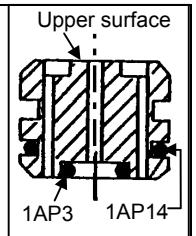 Installing O-rings on Seal 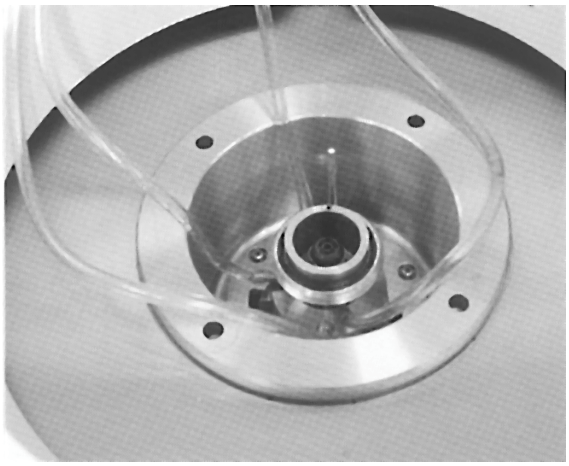
13	Connect tubes to the seal body assembly to make it ready for mounting.	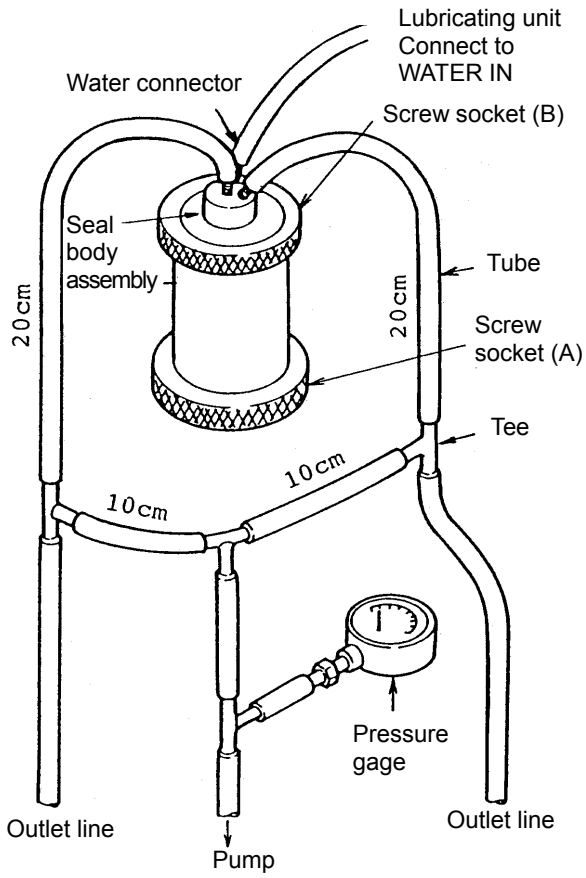

14	Position the seal body assembly after loosening the screw socket (B) 3-5 turns. ○ Apply a thin coat of vacuum grease on the O-ring mounted on the bottom end of the seal body assembly. ⚠ CAUTION: Orientate the water connector of the seal body assembly in the same direction as the water passage of the bearing housing. This is necessary so the cooling water can flow smoothly for efficient cooling.	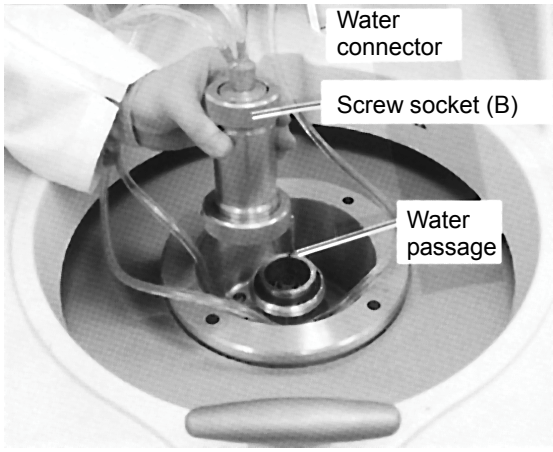
15	<u>Introduce the seal body assembly gently</u> in the bearing housing, and tighten by turning the screw socket (A) clockwise while pushing the screw socket (B) downward. ○ At this time, <u>take care not to move the bearing housing.</u> If it is dislocated, shaft(D2) will become eccentric. Perform readjustment from step 7 of 4.2.2.	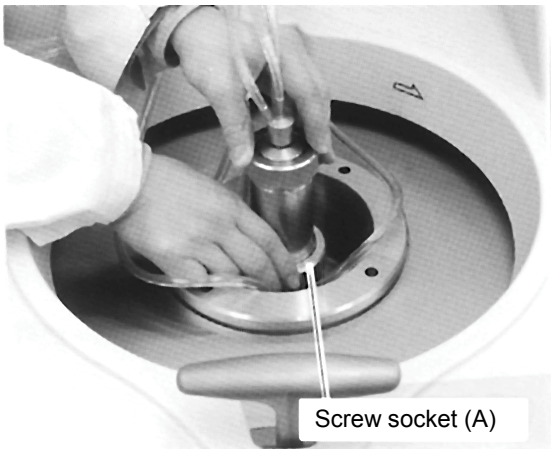

16	Turn on the switch on the low temperature circulating water cooling bath, and then make sure that cooling water circulates. Turn on the WATER and DRAIN switches on the lubricating unit. Waste oil will be sucked. If the TROUBLE lamp for WATER is lit and the buzzer sounds, water is not flowing or the water pressure is too low. ○ Inspect the entire seal assembly to check that there is no leakage of cooling water	
17	Turn the screw socket (B) of the seal body assembly to adjust its height to the position of the red line on the pipe. <u>The upper surface of manifold (A) should be positioned so that middle part of the red line may be still visible.</u> If the red line is invisible even by tightening the screw socket (B) fully, the following causes might be presumed. 1. The screw socket (A) may not have been tightened sufficiently. 2. The bottom of the seal body ass'y may not have been inserted into the bearing housing sufficiently. If it is hard to turn the screw socket (B), the pressure of the low temperature circulating water cooling bath might be too high. In such cases, repeat from 4.2.2. 14.	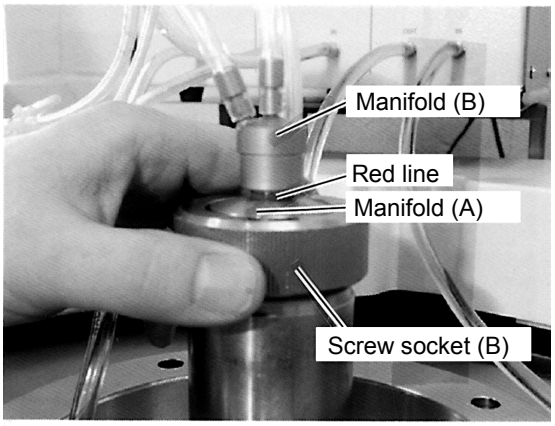
18	The assembled status is illustrated on the right. Check the pressure. If necessary, adjust the pressure to the intended value (0.05-0.1MPa).	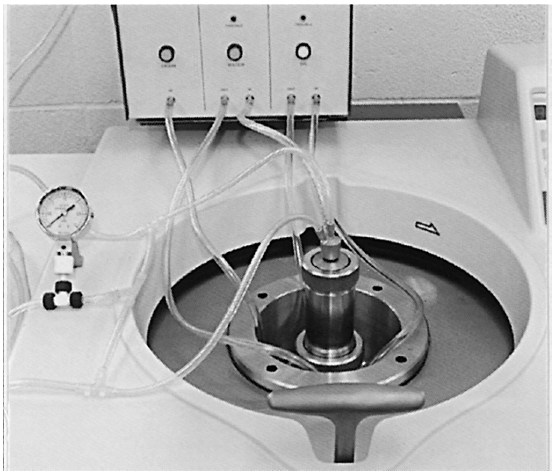

4.2.3 Spinning

1	Make sure the operation mode of the ultracentrifuge is ZONAL. And set speed of revolution 3,000 rpm. Then, turn on the start switch. ⚠ CAUTION: If the lubricating unit becomes defective during operation, the lubricating unit makes beep tones and an alarm signal. In this case, solve the problem quickly and clear the alarms. (Refer to Section 3.3 for details.)	
2	Loading While spinning at 3,000 rpm, inject from the outer connector overlay solution, cushion solution, etc. from lighter ones. Piping and clamp positions at this time are shown on the right. ○ In case of density gradient centrifugation, inject 100-150 ml of overlay solution and then 330-280 ml of density gradient solution from the lighter one, at a flow rate of 30-50 ml/min.	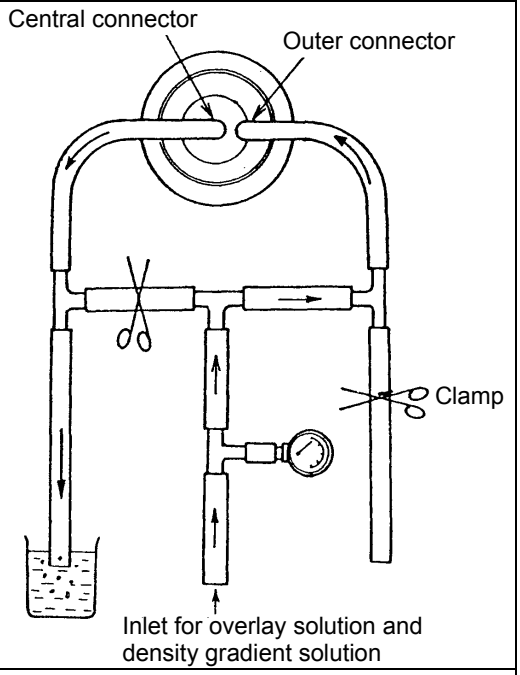
3	When the rotor is filled with density gradient solution, the injection pressure becomes more than 0.05 MPa. After the injection pressure is more than 0.05 MPa, decrease a flow rate to 10-20 ml/min and inject the solution until the solution flows out of the central connector. If the injection pressure exceeds 0.1 MPa, move the clamp from (A) to ① and then move the clamp from (B) to ②. Inject the solution at a flow rate of 30 ml/min for 30 seconds, and then move the clamp from ① to (A), and move the clamp from (B) or ②. Do not move the clamp positioned at (B) and ② first. Be sure to move the clamp positioned at (A) and ① first. At this time, tap the tube with your fingers so that air bubbles do not stay in the outlet for a solution.(outlet: from the outer connector to 2 (see the figure)) if a solution flows in the reverse direction of the above, tap tube with your fingers so that air bubbles do not stay from the central connector to B. Repeat these procedures five or six times and check that air bubbles do not form in the tube even if the flow direction is changed.	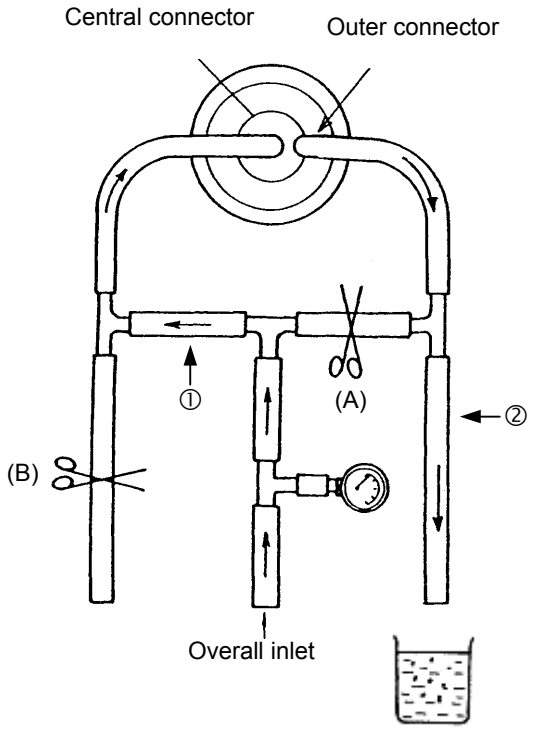

4	Accelerate the rotor to the specified high speed while supplying the overlay solution at a flow rate of 30 ml/min.
5	When the rotor reaches the specified speed, inject the sample at the specified flow rate to start separation. The injection pressure of a water type sample is approximately 0.08-0.1 MPa maximum flow rate of 9 l/hr when the revolution speed is maximum. The lower the flow rate and the lower the revolution speed, the lower the injection pressure. ○ Take care not to allow air into the central connector to put in a sample. If air is introduced and the flow has stopped, arrange the clamps as shown in 4.2.3.(3) flow overlay solution to eliminate air and then inject the sample. If the inconvenience cannot be eliminated by such measures, decelerate the speed to 3,000 rpm, and carry out the above steps to eliminate air. 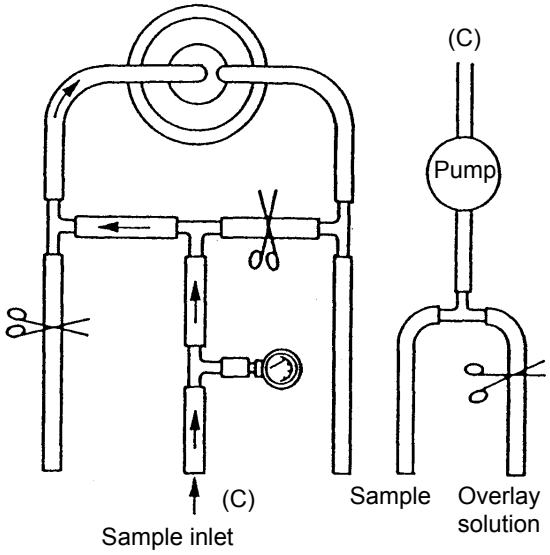 ⚠ CAUTION: During high speed revolution, check the vacuum degree and, if it has dropped unusually or an anomaly has occurred, stop operation immediately. Poor vacuum may be caused by: • It is better that no bubbles, etc. are mixed in the sample.
6	After the sample is injected, flow overlay solution again at 30 ml/min. And spin until the sample has been precipitated. Calculate the sedimentation time from the following formula using K factor from the separation characteristic table (see Chapter 10). Sedimentation time T (hr) = K/S X 1.5 S: Sedimentation coefficient of sample
7	The recovery method of or separated particles differ from density gradient centrifugation to pelleting. Description follows for them respectively.

8	Unloading (In case of density gradient centrifugation)		
	1	After completion of sedimentation, press STOP and decelerate the rotor down to 3,000 rpm. (In the case of ZONAL mode operation, the rotor is automatically decelerated down to 3,000 rpm and stabilized.) With the rotor kept spinning at 3,000 rpm, detach the tube from the outer connector and connect an air-block tube instead. The air-block tube is necessary to introduce the extrusion solution to the external wall of the rotor. At this time, fill the tube to be injected with extrusion solution. Use an extrusion solution the density of which is higher than the density gradient solution or cushion solution injected into the rotor.	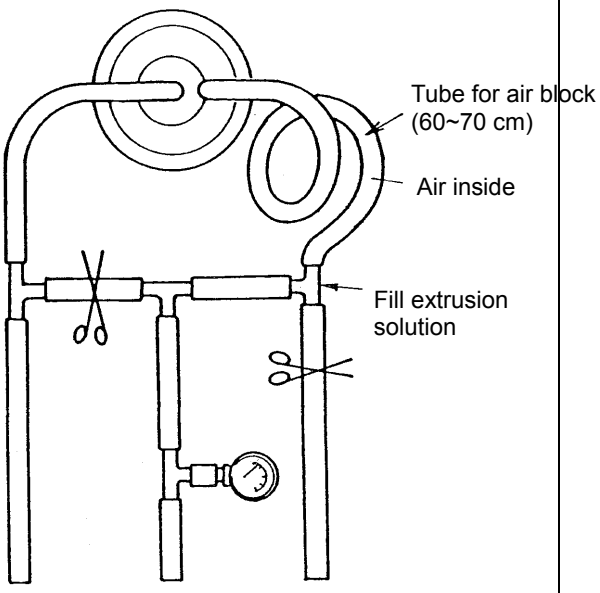
	2	Send extrusion solution from the outer connector, and push out the separated sample and density gradient solution from the central connector. Thereafter, stop the rotor.	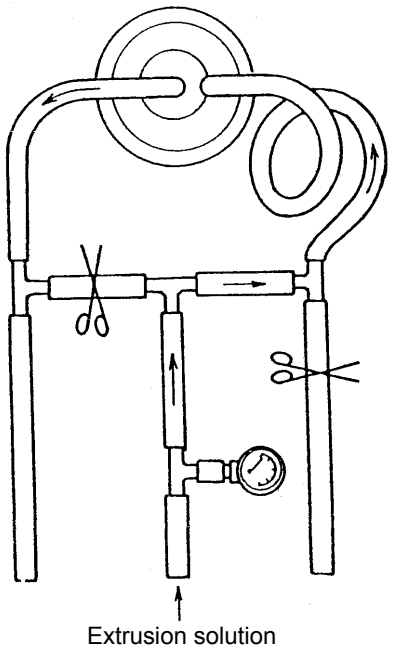
	Unloading (In case of pelleting)		
		After completion of sedimentation, decelerate the rotor to a stoppage. Rotate the pump in the reverse direction to remove the solution from the central connector. Disassemble the rotor, and recover pellets.	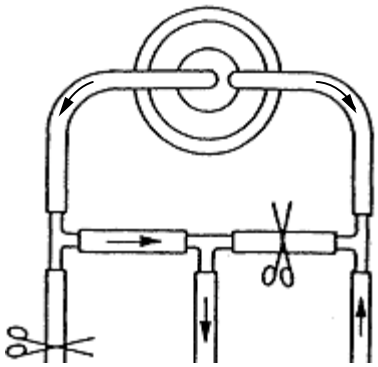

4.2.4 Stoppage

1	Turn off the OIL, WATER and DRAIN switches on the lubricating unit. And turn off the switch on the low temperature circulating water cooling bath. At this status, cooling water remains in the seal attachment assembly. Drain the cooling water by connecting the cooling water supply pipe (this pipe is connected to the WATER OUT portion of the lubricating unit) to the DRAIN connector.
2	Disassemble and remove the seal attachment in the procedure reverse to assembly. Clamp by a pinch cock or others the OIL supply pipe on the bearing housing to prevent oil from flowing out of the bearing housing.
3	Remove the door adapter, open the door, and take out the rotor gently.
4	Remove the shaft(D2) by loosening the nut. Install the rotor on the Rotor base, and remove the cover. Pull out the core by means of the core handle. Here, recover pellets, if any.
5	As for the centrifuge, clean the chamber interior, close the door, mount the door hole cover, and turn off the power switch. Although a small amount of oil leaks into the chamber, this is normal.

4.3 Capacity in rotor

Fig. 13 and 14 show the relationship between the radius and capacity in the rotor. Use them as references for determining the injected volumes of density gradient solution and cushion solution.

The capacity of separation space in rotor is approx. 430 ml . However, since there is a capacity of approx. 25 ml in the flow path of seal body assembly and center of rotor, the total capacity is approx. 455 ml as shown in fig. 14.

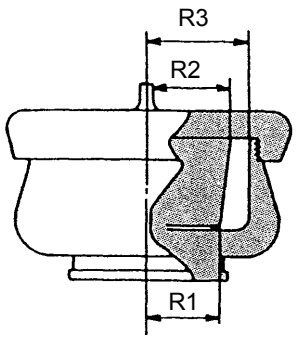

Fig.13 Radius in rotor

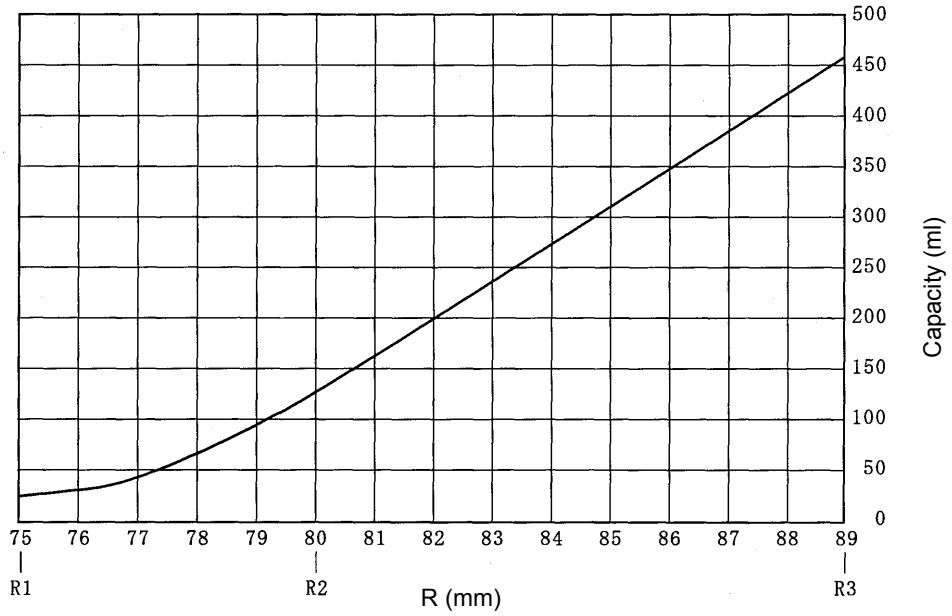

Fig.14 Capacity

4.4 Determination of sample flow rate

The separation characteristics with respect to the sample flow rate by this continuous flow rotor are given in Fig. 15. Determine the flowing in rate of the sample to be separated referring to Fig. 15.

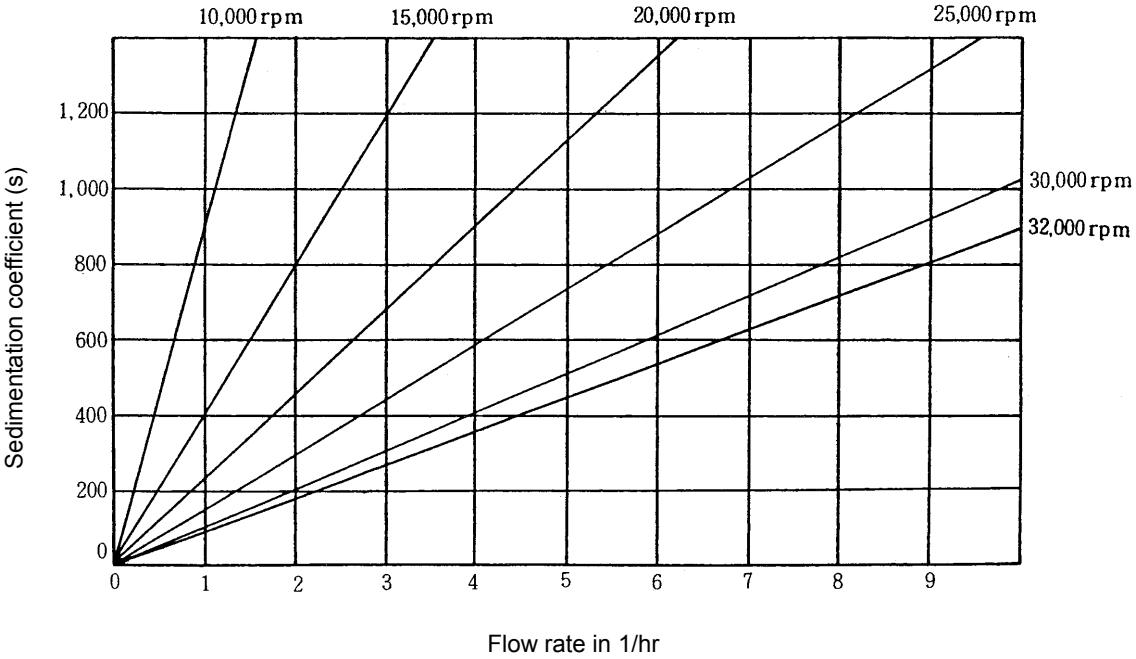

Fig. 15 Separation characteristics

4.5 Lubricating unit

The lubricating unit is provided with lubricant oil supply mechanism and waste oil recovery mechanism necessary for rotor operation. It further incorporates with safety features which detect malfunctions of lubricant or cooling water.

Respective description follows:

(1) OIL

The lubricant oil supply mechanism consists of oil filter and mechanical pump. Turning on the OIL switch operates the mechanical pump, Lubricant is delivered from the OUT connector and returns to the OIL bottle through the IN connector. The oil level in the OIL bottle is becoming the half of the bottle, replenish. The OIL switch also serves as a safety feature actuating switch. If lubricant stops flowing with the OIL switch ON, the TROUBLE lamp comes on, it inform in the buzzer sound.

(2) WAER

The cooling water supply mechanism consists of low temperature circulation water bath connected to the lubricating unit and tubing. Cooling water is delivered from the OUT connector, and returns to the low temperature circulation water bath through the IN connector. The WATER switch also serves as a safety feature actuating switch. If cooling water stops flowing with the WATER switch on, the TROUBLE lamp comes on, it inform in the buzzer sound.

(3) DRAIN

The waste oil recovery mechanism consists of midget vacuum pump and DRAIN bottle.

Turning on the DRAIN switch starts the vacuum pump, which sucks and recovers to the DRAIN bottle waste oil discharged from the bearing housing.

Please check the waste oil quantity of the DRAIN bottle after operation. If the reading is high, throw away waste oil.

5. PRECAUTIONS IN USING ROTOR

5.1 Maximum allowable rotor speed

The maximum rotor speed marked on the rotor and cover is a one determined for the use of the rotor with a sample or density gradient solution of less than 1.2 g/ml in maximum density.

In case the rotor is used with a sample or density gradient solution of more than 1.2 g/ml, it should be spinned at a maximum speed reduced by the following calculation.

$$\text{Allowable maximum speed} = \text{Maximum speed} \times \sqrt{\frac{1.2}{\text{Maximum density of gradient solution (g/ml)}}}$$

Do not spin the rotor beyond the allowable speed.

5.2 Precautions on spinning rotor

- ○ <u>Never spin the rotor at a speed over 3,000 rpm unless it is filled with the liquid.</u> If this is neglected, the core will be damaged.
- ○ <u>Never spin the rotor at a speed over 3,000 rpm unless the seal attachment is mounted.</u> If this neglected, the shaft(D2) will be damaged.

5.3 Handling the shaft(D2)

- ○ Since the shaft(D2) mounted on the rotor top is one of the important parts of this rotor, much care should be exercised when. handling the shaft(D2). If the shaft(D2) is bent or damaged, rotor vibration or damage to bearing will possibly occur.

5.4 Replacing Overspeed Decal

The overspeed decal, if corroded or discolored must be replaced immediately. To replace the overspeed decal, follow the procedure below.

Replacing the overspeed decal

(1) Preparation

- Prepare a new overspeed decal and knife.
- Wash and then dry the rotor well.

(2) Hold the rotor upside down.

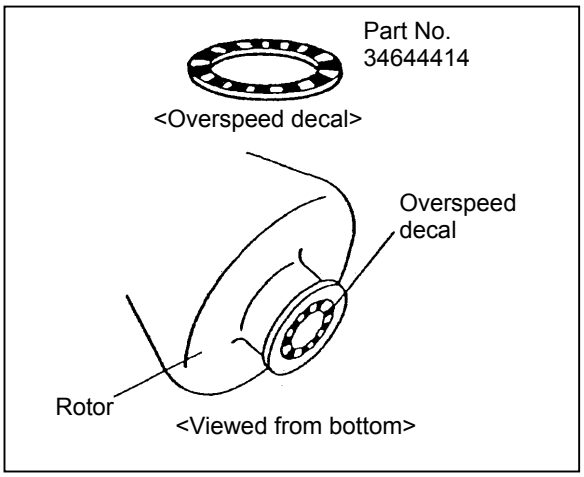

Fig. 16 Overspeed decal

(3) Pry the edge of the overspeed decal with the knife and remove the decal.
Be very careful not to damage the rotor.

(4) Clean the decal hole on the rotor by using alcohol.

(5) Remove the backing paper from the new overspeed decal. Place the overspeed decal so that it snugly fits into the groove of the decal hole on the rotor. Make sure the decal does not move.

■ Caution

- The overspeed decal plays an important role to control the rotor revolution speed.
  The overspeed decal must match the maximum speed of the rotor.
- When replacing, be very careful not to damage the overspeed decal and rotor body.

5.5 EMPLOYED MATERIALS

The following materials are used on the passage of the sample:

Table 4

Part name	Material
Tigon tube	PVC (specially processed)
Tee	Polypropylene
Pressure gage	Teflon (tetrafluoride ethylene)
Metallic section of seal attachment assembly, etc.	Stainless steel
Fastening seal surface (seal body side)	Tungsten carbide
Seal	Polymid resin
O-ring	NBR
Rotor, cover, shaft, titanium sleeve, metal ring	Titanium alloy
Core, blade	Noryl (polyphenylene oxide resin)
Seal packing	Fluorine rubber

Chemical Resistance of Noryl

DO NOT use the following substances with Noryl

benzene
carbon tetrachloride
chlorine
chloroform
dibutyl phthalate
ethylene glycol
fluorine
Freon
furfural
heptane
hexanol
kerosene
petroleum ether
polypropylene glycol
pyridine
pyridine sulfate
toluene (toluol)

The following substances may be used with Noryl at 26℃ or below

acetone
acetic acid
arsenic acid
alcohol
alkalies
ammonium chloride
ammonium hydroxide
ammonium phosphate
ammonium sulfate
amyl acetate
amyl alcohol
borax
bromine
butyl alcohol
butyl cellosolve
butyl mercaptan
benzoic acid
boric acid
butyric acid
calcium chloride
calcium hydroxide
carbon bisulfide
cesium chloride
chloracetic acid
chlorosulfonic acid
citric acid
copper chloride
copper nitrate
copper sulfate
cyclohexane
ethyl acetate
ethyl chloride
ferric chloride
formic acid
hydrobromic acid
hydrochloric acid
lactic acid
nitric acid
ortho-phosphoric acid
picric acid
phosphoric acid
stearic acid
sulfuric acid
ferrous sulfate
formaldehyde
glycerin, glycerol
hydrogen peroxide
iodine
isopropanol
lead acetate
lithium chloride
magnesium chloride
magnesium hydroxide
methanol
methyl cyclopentane
mineral oil
phenol
potassium bichromate
potassium carbonate
potassium chlorate
potassium chloride
potassium hydroxide
potassium nitrate
potassium sulfate
sodium bicarbonate
sodium bisulfate
sodium carbonate
sodium chlorate
sodium cyanide
sodium hydroxide
sodium nitrate
sodium perborate
sodium peroxide
sodium phosphate
sodium pyrophosphate
sodium silicate
sodium sulfate
sodium sulfite
sodium thiosulfate
stannous chloride
sucrose
tetranitromethane

6. TROUBLE SHOOTING

Locate malfunctions and take corrective actions referring to Table 5 and Table 6

Table 5 Troubleshooting

Symptom	Details of checking	Corrective action
Vibrations are abnormally great when centering the bearing housing.	1. Assembled state of bearing housing. 2. Shaft(D2) is bent.	1. Bring the bottom of bearing housing into close contact with the contact surface of door adapter. 2. Replace shaft(D2).
Pressure is 1.5- kgf/cm or higher when density gradient solution is injected.	1. The injection flow rate is too high. 2. The rotor has been filled with solution. 3. The injection passage is blocked.	1. The appropriate flow rate is approx. 50 ml/min. 2. If filled up, it can be released in the subsequent stage. 3. Disassemble and check. (Blocking is likely to occur in the seal body assembly.)
Too much drainage	1. Transparent oil drains. 2. White solution (sample) drains.	1. The gap between shaft(D2) and the bearing becomes too great and too much oil is components. 2. Leaked from sealed surface. See Table 6.
Bubbles enter the sample line.	1. The pressure rises. 2. The sample stops flowing.	1. If the pressure does not rise so much, it is possible to continue operation. 2. If the pressure is too high or the sample stops flowing, slow down the rotor and remove bubbles.
Pressure drops abruptly during separation.	1. Too much white solution drains. 2. The sample injection line is bypassed.	1. See Table 6. 2.
Temperature of the rotor rises.	1. Poor degree of vacuum.	1. Investigate the cause of poor degree of vacuum and take corrective action. 2. It is necessary to precool the rotor body and cool the sample to separate at low temperatures. (See item 4.2)

Table 6 Defective phenomena and corrective action of sealed sections

Symptom	Location		Probable cause	Corrective action
	Part name	Portion		
Leak from overlay solution line	Shaft(D2)	O-ring (1AS5)	1. Poor sealing due to degradation or injury	Replace the O-ring.
			2. Poor sealing due to insufficient grease	Apply grease.
		Insertion recess for O-ring	Poor sealing due to injury in recess portion in contact with O-ring	Replace the shaft(D2).
Bypassing, and leak of sample and overlay solution	Seal tube head ass'y	Portion in contact with O-ring	Poor sealing due to injury in portion in contact with O-ring (at 2 places, shaft(D2) and seal sides)	Replace the seal tube head ass'y.
Bypassing, and leak of sample and overlay solution	Seal	Contact face	Poor sealing due to surface roughness, injury or step between inner and outer rings	Replace the seal.
Bypassing		Insertion recess for O-ring	Poor sealing due to injury in recess portion in contact with O-ring	Replace the seal.
		O-ring (1AP3)	1. Poor sealing due to degradation or injury	
			2. Poor sealing due to insufficient grease	Apply grease.
Overlay solution line leaks		O-ring (1AP14)	1. Poor sealing due to degradation or injury	Replace the O-ring
			2. Poor sealing due to insufficient grease	Apply grease.
Bypassing, and leak of sample and overlay solution	Seal body ass'y	WC sealing face (in contact with seal)	1. Poor sealing due to surface roughness or injury	Replace the seal body ass'y.
			2. Poor follow-up in vertical direction of seal body ass'y with seal (large friction resistance of seal body and bearing housing	1. Apply grease to O-ring (1AG30) of the seal body ass'y.
				2. Apply grease to O-ring of the bearing housing).
	Water Cooling Bath	Cooling Water pressure	Poor pressure >0.2Kgf/cm^2	Make water pressure rise.

7. LIFE AND WARRANTY OF ROTOR

While using rotor repeatedly, its strength decreases gradually due to fatigue and creep of material, by which the rotor life is determined. Sum up the number of operations and number of operating hours, and if either value reaches the figures (the primary life) shown in Table 8, decrease the maximum speed of the rotor by 10%.

If the operations or operating hours of rotor reach the figures in Table 8 after decreasing the maximum speed by 10% (Secondary life), don't use the rotor any more.

This specification is applied to the rotor body assembly. Shaft (D2) and the seal are consumable parts.

Table 7 Rotor life

TCF-32	1,000 operations	2,500 hr.

WARRANTY

Sorvall rotors designed for Sorvall Preparative Ultracentrifuges are warranted to operate till their secondary life free of troubles attributable to material or workmanship, provided that the rotor must be sent back to the factory so as to check for corrosion and decrease the maximum speed when it reaches the primary life.

If this procedure is neglected, the rotor will not be guaranteed till the secondary life.

So long as the rotor is operated and maintained properly according to the instruction manual, the guarantee remains valid for five years after delivery.

However, the following guarantee is applied to the seal attachment assembly and lubricating unit.

■ Keep Rotor Operation Log Regularly

Rotor operation log is necessary for control of rotor life and guarantee against trouble. Be sure to make an entry whenever operating the rotor and keep the log in good order. If this procedure is neglected, the rotor will not be guaranteed.

8. WARRANTY OF LUBRICATING UNIT AND SEAL ATTACHMENT ASSEMBLY

The warranty is valid for a year after the delivery provided that operation and maintenance are made correctly.

The following parts are consumables: Replace them periodically.

- Shaft (D2)
- Seal body assembly
- Bearing

} : At every about 500 hours of use.

- Seal : At every about 50 hours of use.

9. MAINTENANCE

9.1 Maintenance of rotor

After use, disassemble and wash the shaft, core, titanium sleeve, metal ring, seal packings and O-rings.

The shaft (D2) should be handled with much care, and not together with other parts if possible.

Maintenance of rotor

Maintain the rotor in the following manner:

After the rotor is used, wash it properly with distilled water of 40°C to 50°C and wipe off water drops by a soft rag. Remove the cover and leave the rotor upside down to eliminate moisture.

After making sure the rotor has been completely dried, apply a thin coat of stop cock grease on it and store it in a desiccator. When a corrosive sample is handled, immerse the rotor in warm diluted solution of neutral detergent at pH7 (excluding one containing chlorine) immediately after end of operation and rinse it properly with distilled water.

If foreign matter is present on the tapered opening at the rotor bottom, the rotor might not fit the crown properly, thereby breaking the rotor or spinning shaft.

(1) Foreign matters is removed from the rotor surface after immersing it in warm solution of neutral detergent at pH7 (excluding one containing chlorine) for 24 hr or longer.

(2) Using a soft brush, wash the tapered opening at the tapered bottom of the rotor bottom.

(3) When the rotor is immersed in distilled water of 70°C to 80°C, foreign matter which could not otherwise be eliminated car be dissolved.

(4) When drying, never raise the rotor temperature beyond 120°C.

After dry, apply stop cock grease on the entire surface.

Maintenance of core, O-rings and seal packings

After disassembly, immerse them in warm diluted solution of neutral detergent at pH7 (excluding one containing chlorine) and eliminate soilings, by rubbing with a soft brush as required.

Then immerse them in warm water of 40°C to 50°C to eliminate sticking materials, rinse them with distilled water, dry and store them.

Maintenance of seals

After use, wash them with warm water, dry and store them.

Take care not to scratch the contact surface of the seal.

Checkup of rotor

Check the rotor for corrosion every 100 hr of operation. Check particularly carefully the round portion of the rotor, tapered opening at the rotor bottom (marked in Fig. 17), etc because the mechanical resistance is considerably lost when they are corroded. Corrosion can be recognized by discoloration, dent, crack or others on the surface. If corrosion is found, stop using the rotor thereafter and contact the nearest agent for check.

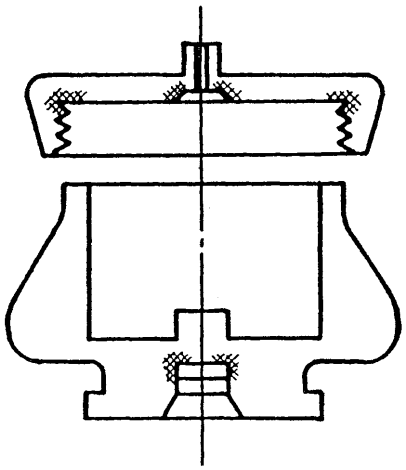

Fig. 17

9.2 Maintenance of seal attachment assembly

Maintenance of seal body assembly

Do not disassemble the seal body assembly.

Wash it sufficiently with cold or lukewarm water. Eliminate water and dry. Store them at a dry status in a desiccator or the like.

Maintenance of bearing housing and door adapter

Wipe off waste water, etc. properly from the bearing housing before storing it.

Drain waste water from the oil sump at the bottom of the door adapter before storing it.

Maintenance of tigon tube and tee

Wash them properly before storing them.

9.3 The maintenance of lubricating unit ass'y

- Check lubricating oil quantity in the OIL bottle and in the case below the half of the bottle, replenish. The capacity of the bottle is 500 ml. Pour in about 400 ml.
- Check a DRAIN bottle and throw away waste oil. Incidentally, the cap of the bottle fasten up sufficiently.

9.4 Sterilization of rotor

⚠ WARNING: Never sterilize the rotor by autoclaving or boiling. Otherwise the strength of rotor may be significantly decreased.

⚠ CAUTION : Do not dip the rotor in the formalin (3%) solution more than 2 hours.

Sterilize the rotor appropriately following Table 8.

Table 8. Sterilizing of rotor ✓: Applicable ×: Inapplicable

Sterilize method	Condition	Rotor
Autoclaving	121 (1.0 kg/cm^2) for 20 min.	×
Boiling	15-30 min.	×
Ultraviolet rays	200-300 nm	✓
Gas	Ethylene oxide	✓
	Formaldehyde	✓
Chemical solution	Ethanol (70%)	✓
	Hydrogen peroxide (3%)	✓
	Formalin	✓

9.5 Changing Bearing when using SHAFT(D2)(Part No.S408047)

How to change Bearing

(1) Removal of the former bearing from the bearing housing ass'y ①
  1) Remove the retainer ring ③.
  2) Pull out the former bearing ②
     using the aluminum or plastic bar (OD:13-13.9mm) [4].
  3) Clean the bearing housing ①.

(2) Apply vacuum grease to three 0-rings of the new bearing.

(3) Insert the new bearing into the bearing housing ass'y and align the pin at the bottom of the bearing housing with the small hole of the new bearing.

(4) Mount the retainer ring ③.

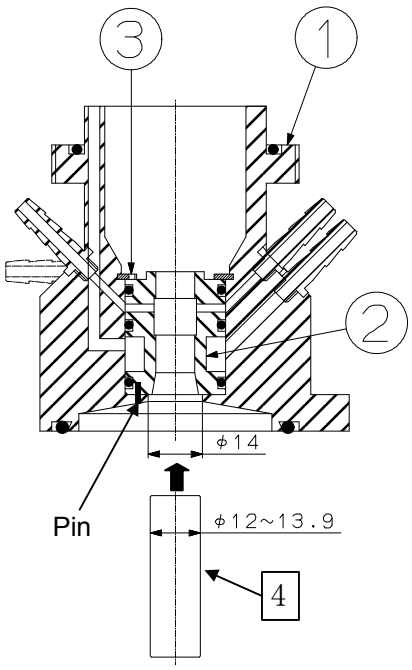

NOTE

Apply oil to the surface of the shaft（D2） ass'y before inserting it into the bearing.

10. SEPARATION CHARACTERISTICS

Table 9. Separation characteristics of TCF-32

Speed N (rpm)	Centrifugal Force (G)			K factor
	R = Rmin (7.5 cm)	R = Rave (8.2 cm)	R = Rmax (8.89 cm)	
7,500	4,712	5,152	5,586	765
10,000	8,378	9,159	9,930	431
12,500	13,090	14,312	15,516	276
15,000	18,849	20,609	22,343	191
17,500	25,656	28,051	30,411	141
20,000	33,510	36,638	39,721	108
22,500	42,411	46,369	50,271	85
25,000	52,359	57,246	62,063	69
27,500	63,355	69,268	75,097	57
30,000	75,398	82,435	89,371	48
32,000	85,786	93,792	101,685	42

11. COMPONENTS AND ACCESSORIES

11.1 Components

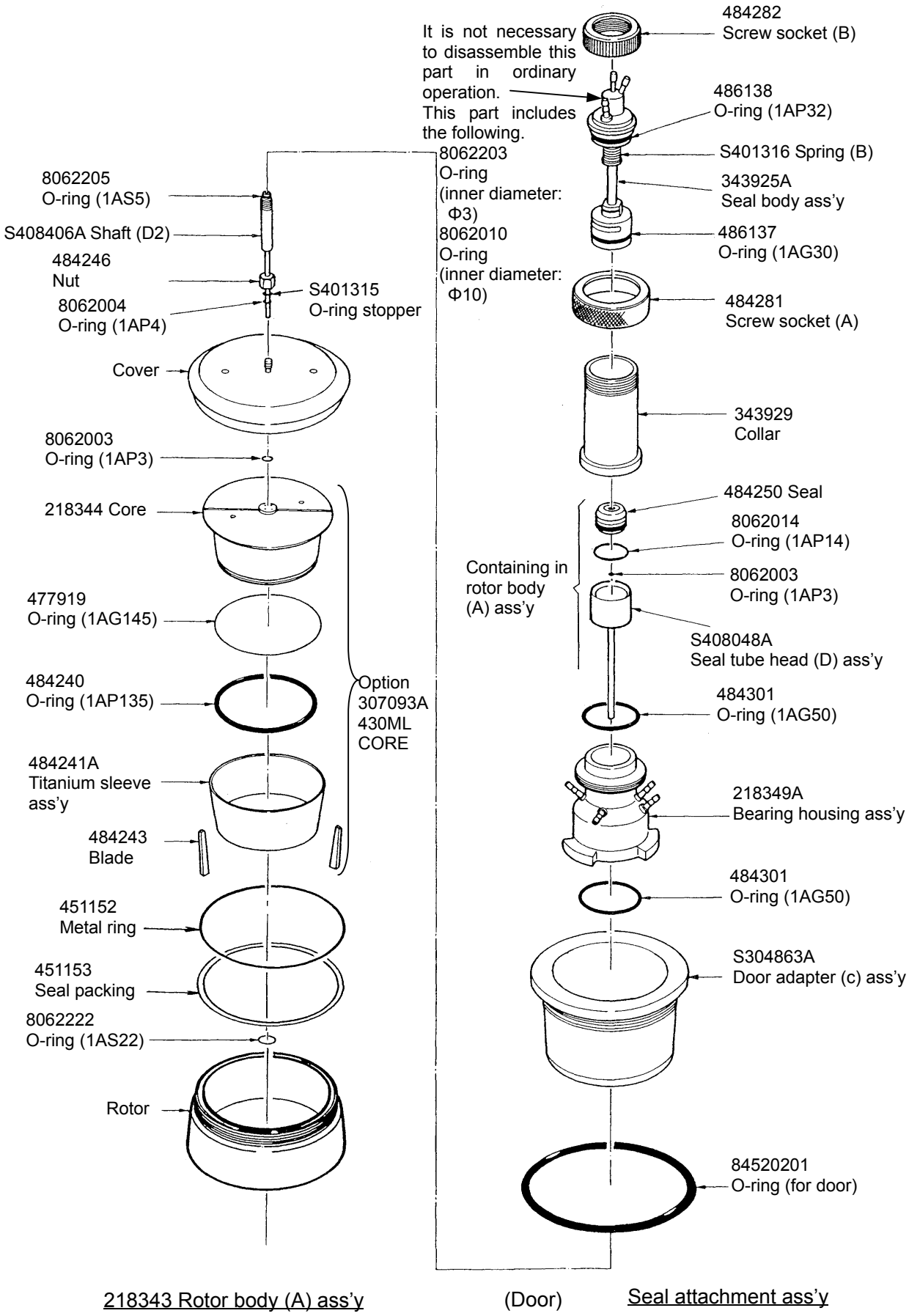

11.2 Accessories

11.2.1 Rotor assembly accessories

Sketch	Part No.	Part name	Q'ty
	S202696A	Door ass'y (x)	1
	484310	Cover handle	2
	84520201	O-ring (for door, ID180)	2
	S999197	Instruction manual	1

11.2.2 Rotor body assembly accessories

Sketch	Part No.	Part name	Q'ty
————	218343E	Rotor body (A) ass'y	1
	484253A	Core setter ass'y	1
	343920A	Holder base ass'y	1
	323663A	Handle ass'y	1
	4692832	Torque wrench	1
	484261	Seal extractor	1
	484258A	Seal tube head setter ass'y	1
	464912	Screw driver	1
	216715	Rotor stand	1

Sketch	Part No.	Part name	Q'ty
	451153	Seal packing	1
	8062222	O-ring (for rotor; 1AS22, ID 22)	2
	484240	O-ring (for core, 1AP135, ID135)	2
	477919	O-ring (for core, 1AG145, ID145)	2
	8062003	O-ring (for core, seal, 1AP3, ID3)	4
	8062004	O-ring (for shaft, 1AP4, ID4)	2
	8062205	O-ring (for shaft, 1AS5, ID5)	2
	8062014	O-ring (for seal, 1AP14, ID14)	2
	484250	Seal	2
	320717	Tool box (B)	1
	660557	Silicone grease	1
	84810601	Lubricant for screw	1
	34644414	Overspeed decal	2

11.2.3 Seal attachment assembly accessories

Sketch	Part No.	Part name	Q'ty
————	109575C	Seal attachment ass'y	1
	S304863A	Door adapter (C) ass'y	1
	484264A	Housing stopper (B) ass'y	1
	484283	Screwdriver	1
	484300	O-ring (for bearing housing, 1AG55, ID 55)	2
	484301	O-ring (for bearing housing, 1AG50, ID 50)	2
	8062022	O-ring (for bearing housing, 1AP22, ID 22)	3
	8062009	O-ring (for seal body ass'y, 1AP9, ID 9)	2
	8062010	O-ring (for seal body ass'y, 1AP10, ID 10)	2
	486137	O-ring (for seal body ass'y, 1AG30, ID 30)	2
	486138	O-ring (for seal body ass'y, 1AP32, ID 32)	2
	664370	Nalgon tubing (No.8000 3/16x5/16x1/16) (For cooling water and lubricating oil)	3m
	662905	Tigon outer tube R3603 inner 1/8 x outer 1/4 (for sample)	7.5m
	484286	Tee	6
	484287	Clamp	3
	484288A	Pressure gage ass'y	1

11.2.4 Lubricating assembly accessories

Sketch	Part No.	Part name	Q'ty
————	S101713B	Lubricating unit 2 ass'y	1
	S202667A	Unit base ass'y (X)	1
	S306920	Unit base (2)	1
	8065203	M4 x 8 screw	4
	4754482	Nylon braided hose	3.5m
	411421	Band	4
	463152A	Drive oil ass'y	1

12. INSTRUCTION FOR 940ML CORE (Part No.348333B)

The volume for TCF-32 CONTINUOUS FLOW ROTOR in which 940ML CORE is used is 940ml.

940ML CORE is good for separating the sample which contains larger volume of pellet.

12.1 SPECIFICATIONS

Max. speed	32,000 RPM
Max. centrifugal force	102,000 x g
K factor	106
Total capacity	940 ml
Material	core: NORYL titanium sleeve: Titanium blade: NORYL O-ring: Nitryle rubber
Weight of core	1,380 g

12.2 USAGE

(1)	Mount the core, titanium sleeve and blades. ○ Make sure the three types of O-ring are free from scratches. Apply a thin coat of vacuum grease on them before installation. ○ Put the blades on the pins on the titanium sleeve.	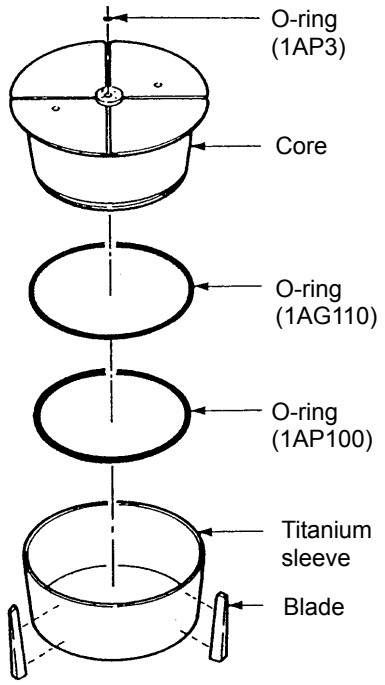
(2)	Operation : Prepare for sipping the TCF-32 rotor after the same manner of TCF-32 INSTRUCTION MANUAL. Caution : The volume of 940ML core is differ from the standard core. Determine the flow in rate to be separated referring to the following usage.	

12.3 Capacity in rotor

Fig.18 and 19 show the relationship between the radius and capacity in the rotor. Use them as references for determining the injected volumes of density gradient solution and cushion solution.

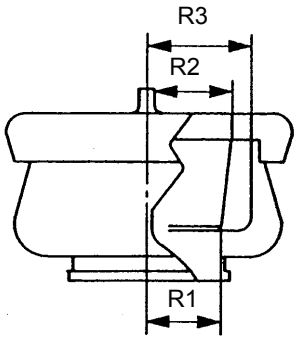

Fig.18 Radius in rotor

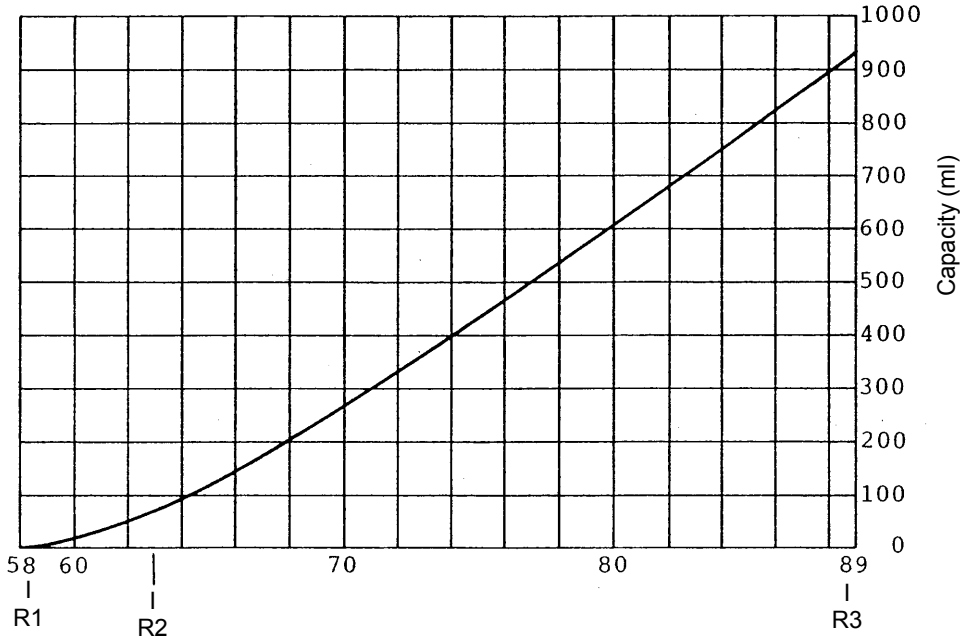

Fig.19 Capacity

12.4 Determination of sample flow rate

The separation characteristics with respect to the sample flow rate by this continuous flow rotor are given in Fig. 20 Determine the flowing in rate of the sample to be separated referring to Fig. 20.

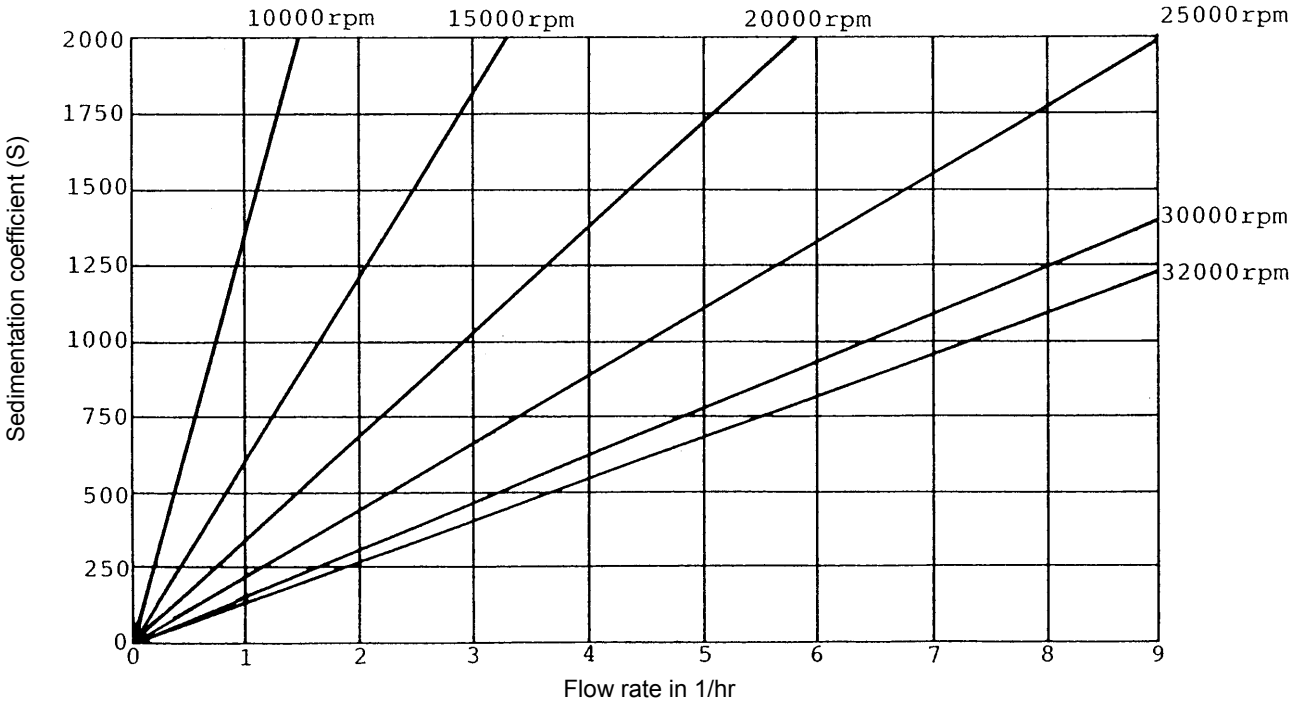

Fig. 20 Separation characteristics

12.5 Maximum allowable speed of rotor

The maximum speed of the rotor inscribed on the cover surface is determined when the maximum density of gradient solution is below 1.2 g/ml.

If the maximum density of the gradient solution exceeds 1.2 g/ml, decrease the maximum speed of the rotor according to the following equation.

$$\text{Allowable maximum speed} = \text{Maximum speed} \times \sqrt{\frac{1.2}{\text{Maximum density of gradient solution (g/ml)}}}$$

Do not spin the rotor beyond the allowable speed.

12.6 COMPONENTS AND ACCESSORIES

12.6.1 Components

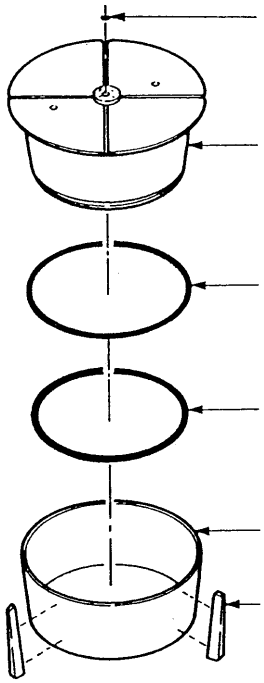

12.6.2 Accessories

Sketch	Part No.	Part name	Q'ty
	487816	O-ring (for core, 1AP100, ID100)	2
	487815	O-ring (for core, 1AG110, ID110)	2
	8062003	O-ring (for core, seal, 1AP3, ID3)	2

13. Preventive Maintenance

This section contains the preventive maintenance procedure (and a sample check list) for the TCF-32 Continuous Flow Rotor (for SORVALL(R) WX and Discovery SE series).

WARNING

To remove the potential of electrical shock, set main circuit breaker and POWER switch to OFF, and disconnect power cord from power source.
The terminals of the circuit breakers are always energized when the power cord is connected.
If centrifuge has been used with radioactive or pathogenic samples, it may be contaminated.
The centrifuge and rotors must be certified free of biological or radioactive contamination: a Decontamination Information Certificate must be filled out by the user.
Appropriate precautions and decontamination procedures must be followed when servicing the centrifuge.
DO NOT service or repair any equipment for which the proper decontamination procedures have not been performed.

13.1 General

The preventive maintenance checks of the centrifuge and rotors are performed on service visits as specified by the service contract or requested by the user. In cases where no service contract exists, the preventive maintenance procedures must be performed by qualified service personnel selected at the discretion of the user (preferably twice a year).
The inspection and cleaning procedures that should be done routinely by the user are found in Chapter 9 of the rotor instruction manual. Check that the routine maintenance procedures are being perform the appropriate corrective maintenance procedures.
Use the Preventive Maintenance Checklist (sample included following this procedure) to record the completion dates of procedures, pertinent data, and any comments relating to the maintenance and operation of the centrifuge and rotors.

13.2 Static Checks

a. Operation log

Copy the operation log up the rotor log book.

b. Lubricating unit

1. Line voltage (unloaded):
   Measure the supplied voltage of the lubricating unit.
2. Out put voltage (AC adapter):
   Measure the output voltage of the AC adapter.
3. Electrical connections electrical connections
   Make sure all electrical connections inside the lubricating unit are properly inserted.
4. Clean inside lubricating unit
   Make sure there is no oil and no water on the bottom of the lubricating unit.

5.Oil filter

Make sure the oil filter inside the lubricating unit are not clogged.

6.Oil level of oil bottle

Make sure the oil quantity of oil bottle is proper level. (The proper level is approximately 400ml.)

7.Drain bottle

Make sure the waste oil in the drain bottle have emptied. (Empty the drain bottle.)

c. Seal body assembly

1.O ring of the door adapter part

Inspect and clean the O ring of the door adapter part, and apply a light coating of the vacuum grease to them.

2.Injury or wear on seal contact surface

Check that there is no injury on seal contact surface of the seal body assembly.

Check that it has not worn out.

3.Choked portion inside the sample passage line of seal body assembly

Check that there is no choked portion inside the sample passage line of seal body assembly.

4.Gap condition with shaft(D2) and bearing

When inserting the shaft(D2) in the bearing, check that it is possible to rotate shaft(D2) inside the bearing smoothly and move it upward and downward smoothly.

5.Flow condition of the OIL and the WATER

Check the flow condition of the oil and the water.

d. Rotor Inspection

1.Corrosion of rotor

To inspect the rotor properly, refer to Chapter 9 of the rotor instruction manual .

2.Rotor structural inspection

Check the condition of the screw part of cover and rotor body, the insertion condition to install cover in the rotor body, and the insertion condition to install core into the rotor.

3.Seal packing and metal ring

Inspect and clean the seal packing and metal ring that are set the upper surface of the rotor body, and apply a light coating of the vacuum grease to them.

4.Injury of the core and the titanium sleeve

Check that there is no cracks or injurious scratches on the core and the titanium sleeve.

5.Injury or wear on the seal surface

Check the injury or wear on the seal surface and inspect O-ring, and clean them.

Apply a light coating of the vacuum grease to them.

6.Injury or wear on the bearing contact surface of the shaft(D2)

Check there is no injury or roughness of the bearing contact surface of the shaft(D2).

Check that there is no injury on the bearing contact surface of the shaft(D2),.

Check that it has not worn out.

7.The O ring of the shaft(D2)

Inspect and clean the O-rings that are set on the upper portion and the lower portion of the shaft(D2), and apply a light coating of the vacuum grease to them.

13.3 Functional Checks

a. Lubricating unit

1.OIL Switch

When OIL switch is turned on, the lamp of the switch is turned on, and oil flows.

2.WATER switch

When WATER switch was turned on under the condition that cooling water wasn't supplied, a trouble lamp is turned on after about 5 seconds, and buzzer sounds.

3.DRAIN switch

When DRAIN switch is turned on, the lamp of the switch is turned on, and it has pump sound, and air is sucked from the IN connector.

4.Flow condition of the OIL and the WATER

When OIL switch is turned on under the condition that it is possible to rotate TCF-32 system, the oil flows through the seal assembly.

The cooling water is supplied to cool the seal assembly. When WATER switch is turned on, the lamp is turned on. And the cooling water passes through the seal assembly properly.

5.Condition of the DRAIN line

A little transparent oil is sucked inside the drain tubing under the condition that TCF-32 system is rotating.

b. Test Run

1.Check by the high-speed rotation

Rotate from 0 rpm to 32,000 rpm by centrifuge, rotation noise and seal assembly noise are checked.

There is no abnormal sound or chattering.

2.Check in the 32,000 rpm rotation

Pressure value is from 0.04 Mpa to 0.06 Mpa when the sample flow rate is 30 ml/min.

Pressure value is from 0.07 Mpa to 0.12 Mpa when the sample flow rate is 150 ml/min.

13.4 Reference (Life of Consumable parts)

Replace the seal with a new one every 50 hours.

Replace the shaft(D2) and seal body assembly with a new one every 500 hours.

Replace the bearing with a new one properly.

SORVALL(R) Centrifuges

TCF-32
Continuous Flow
Rotor

MAINTENANCE CHECKLIST

Static Checks

■ **Operation log**

☐ Use number:_____operations ☐Use time:_____hours

Reference: Rotor Life 1,000 operations or 2,500 hours.

■ **Lubricating unit**

☐ Line voltage(unloaded):_____ ☐ Out put voltage(AC adapter):_____

☐ Electrical connections ☐ Clean inside lubricating unit

☐ Oil filter ☐ Oil level of oil bottle

☐ Drain bottle

■ **Seal assembly**

☐ O ring of the door adapter part ☐ Injury or wear on seal contact surface

☐ Choked portion with the sample passage line of Seal body assembly ☐ Gap condition with shaft(D2) and bearing

☐ Flow condition of the OIL and the WATER ☐ Condition of the DRAIN line

■ **Rotor Inspection**

☐ Corrosion of rotor ☐ Rotor structural inspection

☐ Seal packing and metal ring

☐ Injury of the core and the titanium sleeve ☐ Injury or wear on the seal surface

☐ Injury or wear on the bearing contact surface of the shaft(D2) ☐ The O ring of the shaft(D2)

Functional Checks

■ **Lubricating unit**

☐ OIL Switch ☐ WATER switch

☐ DRAIN switch

☐ Flow condition of the OIL and the WATER ☐ Condition of the DRAIN line

■ **Test Run**

☐ Check by the high-speed rotation ☐ Check in the 32,000 rpm rotation

- Pressure value is from 0.04 Mpa to 0.06 Mpa when the sample flow rate is 30 ml/min.
- Pressure value is from 0.07 Mpa to 0.12 Mpa when the sample flow rate is 150 ml/min.

Reference (Consumable parts)

☐ Seal 50 hours

☐ Shaft(D2)
☐ Seal body assembly } 500 hours
☐ Bearing