Technical Data Sheet

High Performance General Purpose Refrigerator

Revision-1

Thermo Fisher Scientific, Asheville, North Carolina

Specifications	
	Catalog number
	TSX5005GA
	Model Number
	TSX5005GA
	Application, Rating and Electrical Data
Application	Storage of General (non-flammable) Laboratory Materials
Storage Volume	1447 Liters / 51.1 Cubic Feet
Factory Set Point	5℃
Set Point Range / Adjustable Increment	3℃ to 7℃ / 0.1℃
Electrical Power / Rated Current	115 V 60 Hz 1 Phase / 10.2 A
Building Supply Rating	15A dedicated grounded non-GFCI circuit. Protected by circuit breaker rated for inductive loads
Power Plug / Power Cord Length	15 Amp (NEMA 5-15P) / 3.048 Meters (10 feet)
Agency Listings	UL, cUL
Indoor / Outdoor Usage	Indoor Use Only
Application Environment	Non-Corrosive, Non-Flammable, Non-Explosive, Good Air Ventilation
Ambient Operating Temperature	15° C - 32° C (60° F - 90° F)
	Refrigeration Configuration
Refrigeration System	Vapor Compression System
Compressor / Number / Capacity	Hermetic Variable Capacity Compressor / 1 / 398 W
Condenser Type / Number	Enhanced Finned-Tube and Forced-Air Cooled / 1
Expansion Device	Capillary Tube
Evaporator Type / Defrost Method	Forced Air Evaporator Coil / Automatic Defrost
Refrigerant Charge / Flammability	R290, 145 gms,GWP:3 ODP:0 / Flammable
	Controller/Electrical System Configuration and Features
Controller Level	Eye Level
Power Switch	Keyed Off-On - Alarm
Controller Type	IntrLogic Control System: Digital Display, Graphic Thermometer, Automatic Defrost System
Setpoint Security / Programmable	Yes / Yes
Compressor Safe Guard	Current protection
Control Sensor	Single RTD (1000 ohm shielded Platinum RTD)
Connectivity / Remote Outputs	Remote Alarm Contacts, RS485 Output and 4-20 mA Output (optional)
Adjustable Warm / Cold Alarms	Fully Adjustable
Power Failure Alarm	Standard
Electronic Chart Recorder	Optional
	Dimensions and Construction
Interior Dimensions (D x W x H)	72.4 cm x 133.4 cm x 147.3 cm (28.5" x 52.5" x 58.0")
Exterior Dimensions (D x W x H)	96.0 cm x 143.5 cm x 199.4 cm (37.8" x 56.5" x 78.5")
Insulation	5.08 cm (2.0") High-Density Water-Blown Polyurethane Foam
Door Perimeter Heater	Yes
Shelves / Load Limit	(8) Adjustable Wire Shelves / 45 kg (100 lbs) per Shelf
All-Direction Casters	Standard With Locks
Shipping Weight	303 kg / 669 lb
	Typical Performance Characteristics

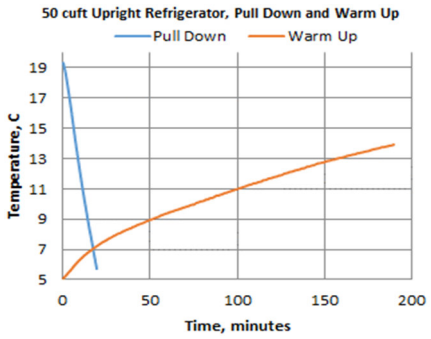

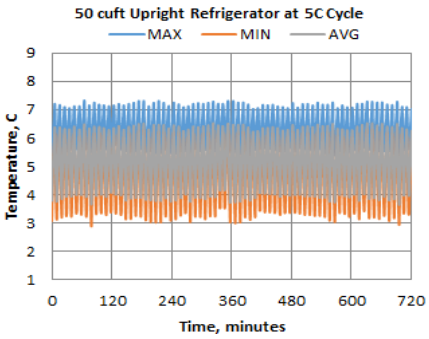

Test Unit Series Number or MSO Number: 19585-B-20

Cabinet Load:	Unloaded
Average Cabinet Temp at 5C Cycle (C):	5.2
Peak Variation from Setpoint (C):	+2.3 / -2.1
Uniformity (C):	1.6
Stability (C):	2.9
1-min Door Opening Recovery to 5C (min):	2
Duty Cycle at 5C (%):	38
Cycle (on/off) rate at 5C (min):	4 / 6
Energy Consumption (kw-hr/day):	6.7
Heat Rejection Rate (btu/hr):	948
Pull Down Time (to 5C) (min):	19
Warm Up Time (5C to 15C) (min):	190
Sound (dBA):	52

1) Performance is nominal and individual units may vary.
2) Product performance will differ due to product amount, product size and operating conditions.
3) Continuous product enhancements may, without notice, result in amendments or ommisions to this specification. Thermo Scientific cannot accept responsibility for damage, injury, loss or expenses resulting from misapplication of the information herein.

© 2019 Thermo Scientific Inc. All trademarks are the property of Thermo Scientific Inc. and its subsidiaries. Specifications, terms and pricing are subject to change. Not all products are available in all countries. Please consult your local sales representative for details.

thermoscientific

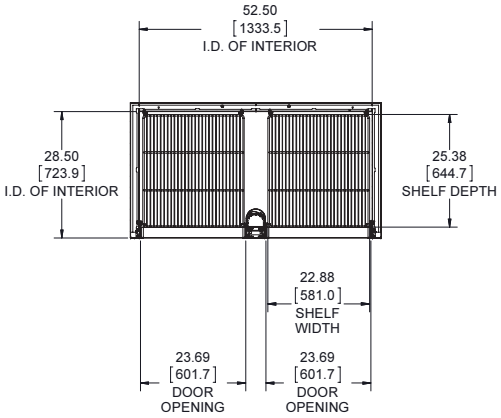

ONLY CABINET SHOWN FOR CLARITY IN TOP VIEW,
TO ILLUSTRATE INTERIOR DIMENSIONS

SECTION A-A

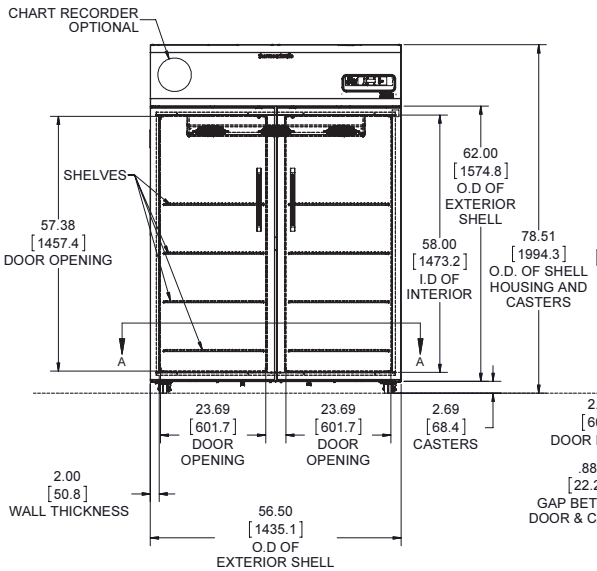

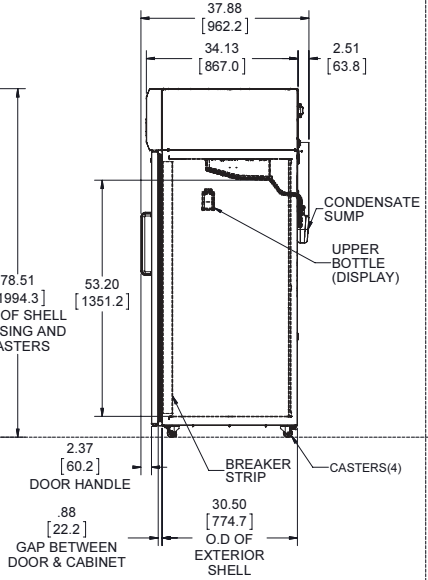

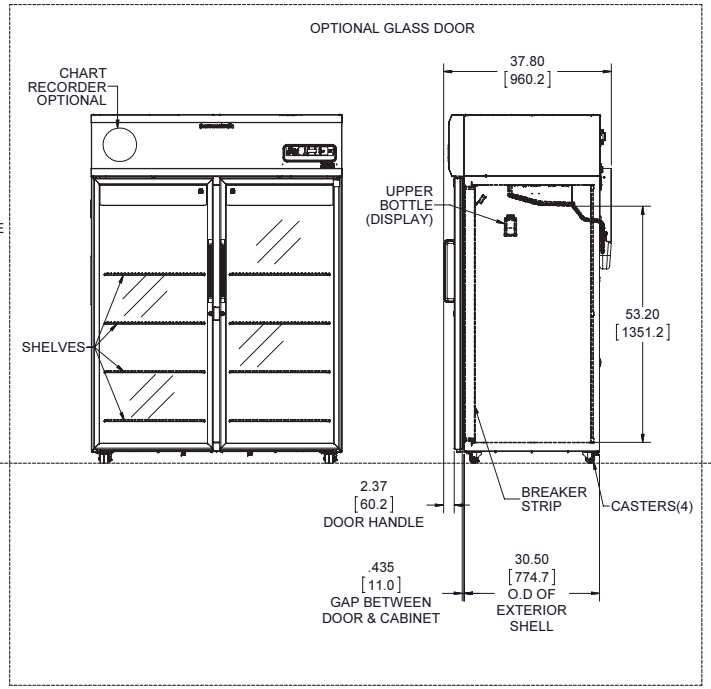

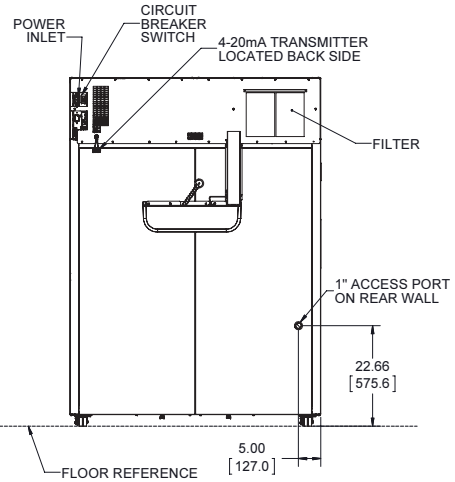

NOTE: DUAL DIMENSION IS INCHES OVER MILLIMETERS
DO NOT USE FOR ENGINEERING PURPOSES. SUBJECT TO CHANGE WITHOUT NOTICE.

50 cu.ft. GP Refrigerator
8 Shelves
Double Outer Door
Top Mount Controls

327839G20_rA