Thermo Forma

Model:
923/983

Ultra Low Temperature
Upright Freezer
23 cu. ft. capacity

Operating and Maintenance Manual

Manual No: 7020923 Rev. 8

CAUTION! All internal adjustments and maintenance must be performed by qualified service personnel.

IMPORTANT!

Read This Instruction Manual

Failure to read, understand and follow the instructions in this manual may result in damage to the unit, injury to operating personnel and poor equipment performance.

The material in this manual is for information purposes only. The contents and the product it describes are subject to change without notice. Thermo Forma makes no representations or warranties with respect to this manual. In no event shall Thermo Forma be held liable for any damages, direct or incidental, arising out of or related to the use of this manual.

MANUAL NO. 7020923

REV	ECR/ECN	DATE	DESCRIPTION	By
--	21210/FR-1661	12/4/02	Added vacuum relief port information	ccs
8	21004/FR-1616	10/15/02	Updated expansion tank assembly (refrigeration schematics)	ccs
	21073/FR-1616			
--	20775/SI-8506	6/4/02	Updated to 40°C Pepi thermostat from 43°C Klixon	ccs
7	20762/FR-1606	5/20/02	Added 'Normally Open' description to expansion tank solenoid valve	ccs
	20845/FR-1616	5/22/02	Updated refrigerant charge on schematics (oil return issue)	ccs
--	20684/FR-1596	3/28/02	Added sample pull-down chart after specs	ccs
6	20644/FR-1557	3/8/02	Added two expansion tanks to refrig system	ccs
5	20251/FR-1526	2/19/02	Cordset connector	aks
4	20522/FR-1557	12/7/01	Updated 917 schematic FLA to 12	ccs
3	20400/FR-1557	11/16/01	Added expansion tank with solenoid and relay timer (release 11)	ccs
--	19363/FR-1429	10/18/00	New thermostat hot condenser temp of 43°C	ccs
2	19404/FR-1441	9/22/00	New temperature control board	ccs
1	19154/FR-1421	9/1/00	Updated parts and refrigeration drawings (dryer part number)	ccs
0		6/30/00	New Manual	aks

Do You Need Information or Assistance on Thermo Forma Products?

If you do, please contact us 8:00 a.m. to 6:00 p.m. (Eastern Time) at:

1-740-373-4763	Direct
1-888-213-1790	Toll Free, U.S. and Canada
1-740-373-4189	FAX
http://www.thermoforma.com	Internet Worldwide Web Home Page
service@thermoforma.com	Service E-Mail Address

Our **Sales Support** staff can provide information on pricing and give you quotations. We can take your order and provide delivery information on major equipment items or make arrangements to have your local sales representative contact you. Our products are listed on the Internet and we can be contacted through our Internet home page.

Our **Service Support** staff can supply technical information about proper setup, operation or troubleshooting of your equipment. We can fill your needs for spare or replacement parts or provide you with on-site service. We can also provide you with a quotation on our Extended Warranty for your Thermo Forma products.

Whatever Thermo Forma products you need or use, we will be happy to discuss your applications. If you are experiencing technical problems, working together, we will help you locate the problem and, chances are, correct it yourself...over the telephone without a service call.

When more extensive service is necessary, we will assist you with direct factory trained technicians or a qualified service organization for on-the-spot repair. If your service need is covered by the warranty, we will arrange for the unit to be repaired at our expense and to your satisfaction.

Regardless of your needs, our professional telephone technicians are available to assist you Monday through Friday from 8:00 a.m. to 6:00 p.m. Eastern Time. Please contact us by telephone or fax. If you wish to write, our mailing address is:

Thermo Forma
Millcreek Road, PO Box 649
Marietta, OH 45750

International customers, please contact your local Thermo Forma distributor.

General Safety Notes used in this Manual

Important operating and/or maintenance instructions. Read the accompanying text carefully.

Ce symbole attire l'attention de l'utilisateur sur des instructions importantes de fonctionnement et/ou d'entretien. Il peut être utilisé seul ou avec d'autres symboles de sécurité. Lire attentivement le texte d'accompagnement.

Wichtige Betriebs- und/oder Wartungshinweise. Lesen Sie den nachfolgenden Text sorgfältig.

Importante instruccions de operacion y/o mantenimiento. Lea el texto acompanante cuidadosamente.

Potential electrical hazards. Only qualified persons should perform procedures associated with this symbol.

Ce symbole attire l'attention de l'utilisateur sur des risques électriques potentiels. Seules des personnes qualifiées doivent appliquer les instructions et les procédures associées à ce symbole.

Gefahr von Stromschlägen. Nur qualifizierte Personen sollten die Tätigkeiten ausführen, die mit diesem Symbol bezeichnet sind.

Potencial de riesgos electricos. Solo personas das capacitadadas deben ejecutar los procedimientos asociadas con este simbulo.

Equipment being maintained or serviced must be turned off and locked off to prevent possible injury.

Risques potentiels liés à l'énergie. L'équipement en entretien ou en maintenance doit être éteint et mis sous clé pour éviter des blessures possibles.

Geräte, an denen Wartungs- oder Servicearbeiten durchgeführt werden, müssen abgeschaltet und abgeschlossen werden, um Verletzungen zu vermeiden.

El equipo recibiendo servicio o mantenimiento debe ser apagado y segurado para prevenir danos.

Hot surface(s) present which may cause burns to unprotected skin or to materials which may be damaged by elevated temperatures

Présence de surface(s) chaude(s) pouvant causer des brûlures sur la peau non protégée, ou sur des matières pouvant être endommagées par des températures élevées.

Heiße Oberfläche(n) können ungeschützter Haut Verbrennungen zufügen oder Schäden an Materialien verursachen, die nicht hitzebeständig sind.

Superficias calientes que pueden causar quemaduras a piel sin proteccion o a materiales que pueden estar danados por elevadas temperaturas.

- ☑ Always use the proper protective equipment (clothing, gloves, goggles etc.).
- ☑ Always dissipate extreme cold or heat and wear protective clothing.
- ☑ Always follow good hygiene practices.
- ☑ Each individual is responsible for his or her own safety.

Table of Contents

Section 1 - Installation and Start-Up

1.1 Unloading and Moving the Freezer

To remove the freezer from the pallet, use the 7/16" wrench to remove all the bolts securing the shipping bracket to the pallet.

If tipped more than 45°, allow the unit to sit upright for 24 hours before start up.

Remove the shipping bracket. Remove the ramp boards from the pallet and place the slotted end over the ramp brackets on the pallet. The support blocks on the ramps will be facing down. Before moving the freezer, make sure the casters are unlocked and moving freely. Align the caster with the ramp boards. Use adequate personnel to roll the freezer off the pallet.

The freezer can be easily pushed to the desired approved location, described in Section 1.6. If necessary, the doorstop may be removed to allow the door to swing fully open to move the unit through tight openings. When the freezer is in position, set the front caster brakes.

The freezer must not be moved with the product load inside.

1.2 Getting to Know Your Freezer

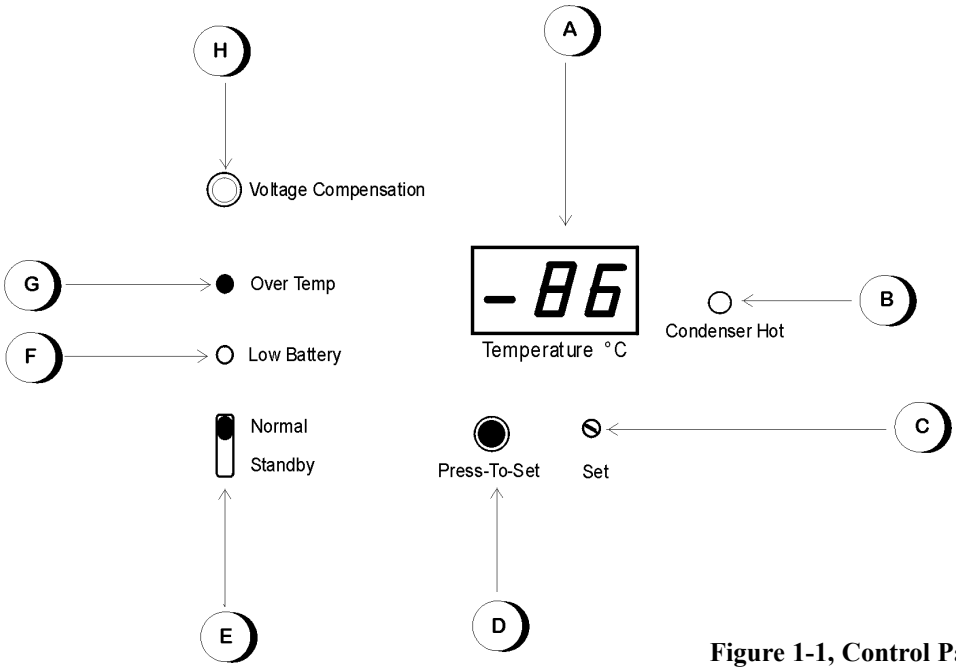

Figure 1-1, Control Panel

A LED display - Shows actual chamber temperature and indicates the control temperature set point when the Press-To-Set button is pressed.

B Condenser Hot indicator - Lights when the thermostat on the condenser reaches approximately 40°C, indicating typically a dirty air filter, a clogged condenser, a fan failure or high ambient temperature.

C Set Point Adjustment screw - Used to set the control temperature set point.

D Press-To-Set button - Press to display control temperature set point.

E Normal/Standby switch - Silences the audible alarm.

F Low Battery indicator - Flashes when the battery needs to be replaced.

G Over Temp indicator - Flashes when the chamber temperature rises above the Over Temperature Alarm setting.

H Voltage Compensation indicator - Indicates when the incoming electrical power is being automatically adjusted to ensure that the compressor operates within specification.

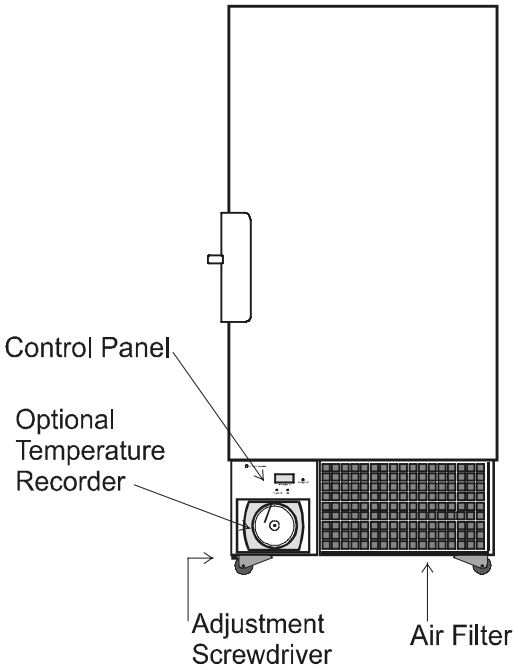

Figure 1-2
Freezer Exterior, front view

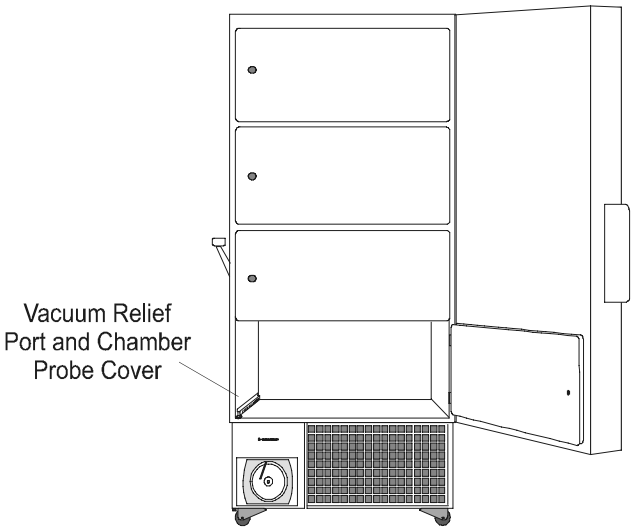

Figure 1-4, Vacuum Relief Port and Chamber Probe

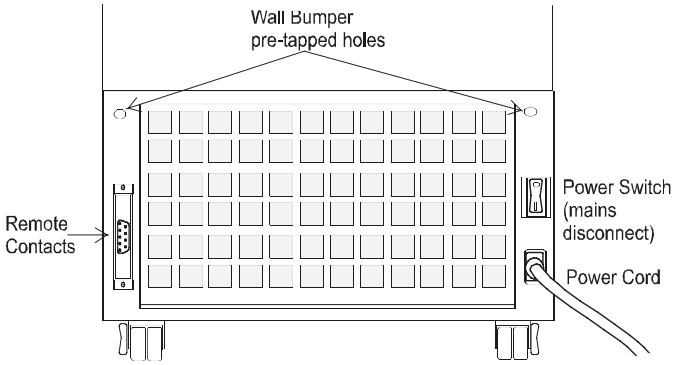

Figure 1-3
Freezer Base, rear view

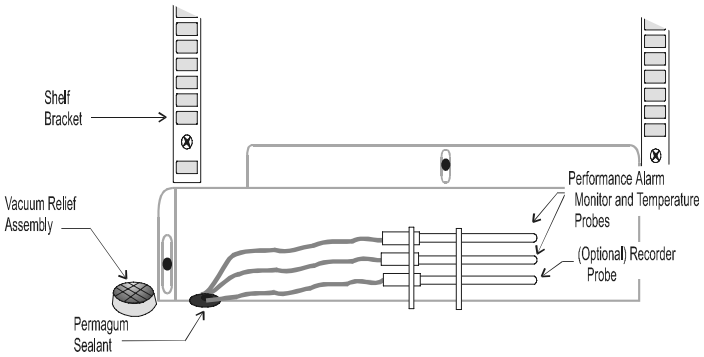

Figure 1-5, Vacuum Relief Port and Chamber Probe Assembly (without cover)

1.3 Environmental Conditions

The ULT Freezers are designed to be electrically safe in the following environmental conditions:

- Indoors
- Altitude: Up to 2,000 meters
- Temperature: 5°C to 43°C
- Humidity: 80% RH at or below 31°C, decreasing linearly to 50% RH at 40°C
- Mains Supply Fluctuations: ± 10% of nominal.
- Installation Category II [1]
- Pollution Degree 2 [2]
- Class of Equipment I
- Climatic Class T (Tropical)[3]

[1] Installation category (overvoltage category) defines the level of transient overvoltage which the instrument is designed to withstand safely. It depends on the nature of the electricity supply and its overvoltage protection means. For example, in CAT II which is the category used for instruments in installations supplied from a supply comparable to public mains such as hospital and research laboratories and most industrial laboratories, the expected transient overvoltage is 2500V for a 230V supply and 1500V for a 120V supply.

[2] Pollution degree describes the amount of conductive pollution present in the operating environment. Pollution degree 2 assumes that normally only non-conductive pollution such as dust occurs with the exception of occasional conductivity caused by condensation.

[3] Class T (Tropical) means that the freezers are electrically safe in a 43°C ambient.

1.4 Installing the Wall Bumpers (Refer to Figure 1-3)

The parts bag, located inside the cabinet, contains the following parts.

Qty.	Stock #	Description	Purpose
2	510016	1/4-20 x 5-1/2" Bolt	Wall Bumper
2	380520	Neoprene Cap	Cap Protector

Install the bolts into the pre-tapped holes on the back of the compressor section. Install a neoprene cap on each bolt. Refer to Figure 1-3 for the locations of the pre-tapped holes.

1.5 Installing the Shelves

Install the shelf clips into the shelf pilasters (front and back) at the desired shelf level. Install the shelves in the cabinet onto the clips.

1.6 Location

Locate the freezer on a firm, level surface in an area with an ambient temperature between 18°C and 32°C. Provide ample room to reach the mains disconnect switch (power switch) located on the rear of the freezer.

For proper ventilation and airflow, a minimum clearance of 5" at the rear, at the top and on the side of the freezer is required. Allow adequate space in the front of the freezer for door opening.

1.7 Connecting the Alarm Battery

NOTE: The battery must be connected upon start-up so that the alarm will activate during an Overtemperature condition.

CAUTION
Contains Parts and Assemblies Susceptible to Damage by Electrostatic Discharge (esd)

1. To gain access to the battery, remove the grille on the front of the freezer. The grille is attached to the freezer by friction plugs on each of the four corners and is readily pulled off. The battery is the rectangle fastened by Velcro to the compressor compartment frame and has a connector with red and black wires. Another red and black wire set with connector is secured to the wiring harness passing through the area of the freezer. Join the two wire connectors and replace the grille.

2. When the battery is connected, the OVERTEMP light will flash and the alarm will sound. Turn the NORMAL/STANDBY switch to the STANDBY position. This will silence the alarm. The alarm will remain silent until the unit is below alarm setpoint. The alarm setpoint is factory set for -65°C. If another setpoint is required, see Section 2.2.

1.8 Remote Alarm Contacts

Remote alarm contacts are located on the rear of the unit. See Figure 1-6 for pin description, shown in the alarm state. The Thermo Forma part number for the plug required is 195482. Maximum rating for this plug is 1.0A @ 30VAC.

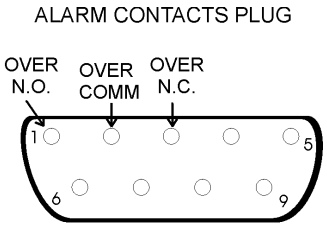

Alarm contact max. 1A @ 30VAC (shown in alarm state)

Figure 1-6
Remote Alarm Contact

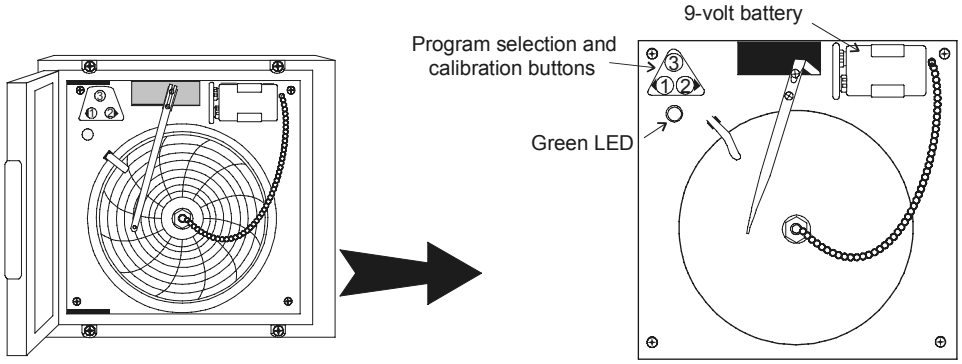

Figure 1-8
Chart Recorder, detail view

1.9 Optional Temperature Recorder

a. Connecting recorder battery

Open the glass door of the recorder and connect the 9-volt battery. The green light on the recorder will come on.

b. Installing the chart paper

1. Open the glass door of the recorder and press button #3 until the pen begins to move outward.
2. Unscrew the knob at the center of the chart and remove the paper.
3. Install the new chart paper, position the paper to the correct time line and replace the knob.
4. Remove the cap from the felt pen and press button #3.

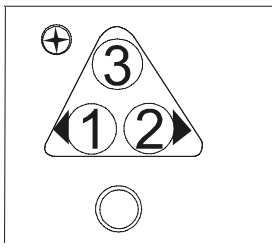

Figure 1-9
Recorder Buttons

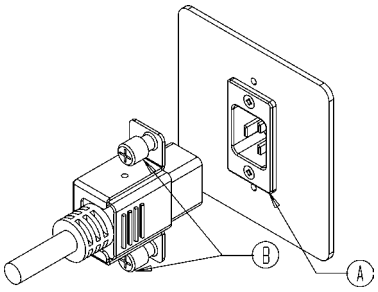

Figure 1-10
Power Cord Assembly

1.10 Attaching the Power Cord

1. Insert the power cord into the power outlet module (A).
2. Tighten screws (B) on the power cord retainer.

Make sure the power cord connection is completely seated.

1.11 Power Switch (mains disconnect)

The power switch is located on the rear of the unit, directly above the power cord. The power switch is also a circuit breaker that protects the entire unit.

1.12 Water-cooled Condenser

An accessory available for your freezer is the water-cooled condenser. Details for the use of this condenser follow:

Water Supply

• Connections:
  Inlet - ½" compression
  Outlet - ½" compression
• Maximum water pressure:
  150 PSIG
• Water usage:
  City water - 65°F (18°C), 1 GPM (3.4 liters)/HP
  Tower water - 85°F (29°C), 3GPM (11.4 liters)/HP

Water Strainer (P/N 780268)

Included in the parts bag within the freezer is a water strainer recommended to be installed in the water inlet line. The connection size is ½" FPT.

1.13 Electrical Requirement and Connection

The freezer should be operated on a dedicated grounded service. Check the voltage rating on the serial tag of the unit and compare it with the outlet voltage. Then with the power switch turned off, plug the line cord into the wall outlet.

1.14 Factory Settings

· Temperature: -80°C
· High Temperature Alarm: -65°C

If you wish to change any of these settings, see the appropriate section(s) in Section 2.

1.15 Start Up and Loading

· Turn the freezer on and allow it to run empty over night.
· When the empty freezer has stabilized over night at the control temperature set point, load the chamber with pre-frozen product.

The freezer was designed for the storage of pre-frozen product only. The addition of warm product may cause a temporary rise in the cabinet temperature.

Section 2 - Operation

2.1 Changing the Control Temperature Set Point

1. Remove the screwdriver on the front left corner of the control panel.
2. Press and hold in the PRESS-TO-SET key on the control panel.
3. Using the screwdriver, turn the SET screw until the desired temperature is displayed. Clockwise lowers the temperature and counter clockwise raises the temperature. The approved operating temperature range for the unit is -50°C to -86°C.

The unit should NEVER be set to operate below -86°C.

2.2 Changing the Over Temperature Alarm Set Point

The following procedure sets the alarm for a precise temperature during initial set up. If a precise temperature is not required, set R9 to the desired temperature.

1. Set the unit to operate at the desired alarm point (see Section 2.1) and allow the unit to operate until it reaches the set point.
2. Remove the top two screws securing the control panel and loosen the bottom two screws. Carefully remove the control panel.
3. Remove the six screws securing the cover of the box attached to the inside of the control panel to expose the alarm board.
4. Turn the switch on the control panel to the NORMAL position.
5. If the unit alarms, slowly adjust R9 clockwise (warmer) until the alarm turns off. If the unit is not in alarm, slowly adjust R9 counterclockwise (colder) until the alarm turns on.
6. The alarm is now set for the desired temperature. Reinstall the box cover and secure with screws. Carefully install the control panel to its proper location and secure with screws.
7. Set the unit to the desired control temperature. See Section 2.1.

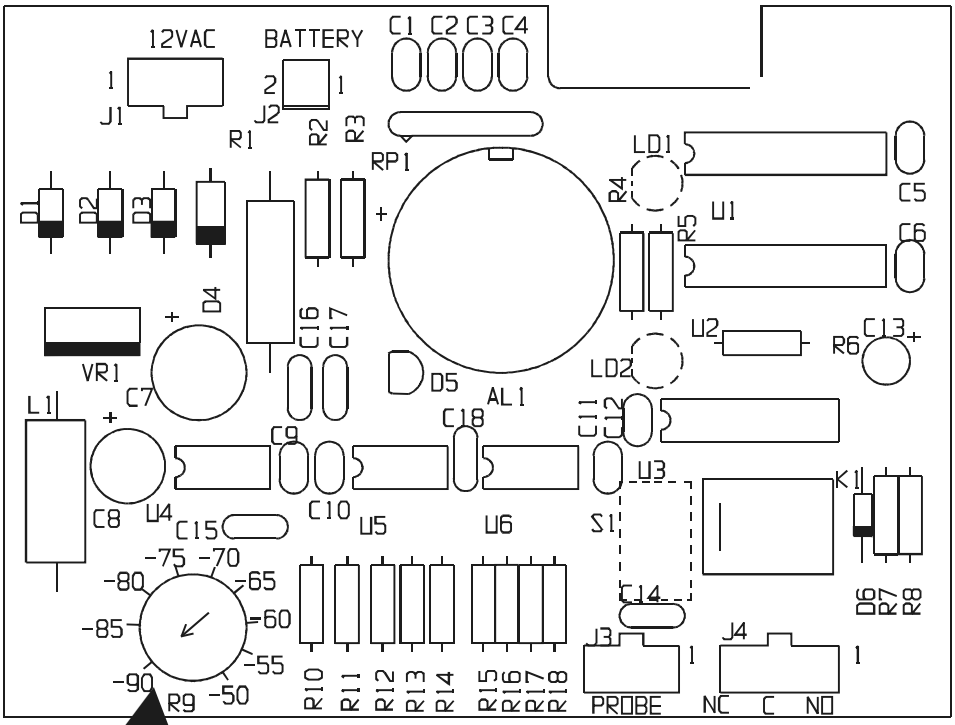

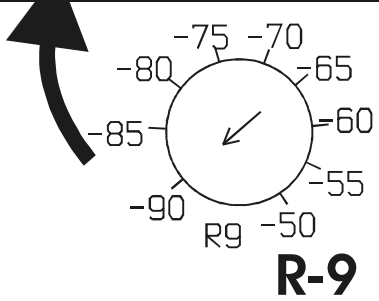

Figure 2-1, Temperature Alarm Circuit Board showing R-9 Control

2.3 Alarms

Alarm Description	Visual	Audible	Cause	Action Required
Over Temperature	Flashing (red)	On	· Unit is above alarm setpoint · Addition of excessive product load	· Check freezer operation.
Condenser Hot	On (red)*	---	· Filter and/or condenser dirty. · Operating freezer in greater than 40°C ambient.	· See section 4.2 and 4.3 for cleaning filter and condenser.
Low Battery	Flashing (red)	---	· Rechargeable battery not connected. · Rechargeable battery needs replaced.	· See Section 1.6. · Replace battery. See section 4.7 for battery replacement instructions. See spare parts list for battery part number.
Voltage Compensation	On (green)	---	· Incoming voltage too high or too low	· Check if line voltage is within operating range. See 6 - Electrical. If within specification no action required.

2.4 Silencing the Over Temperature Alarm:

· Move the switch from the NORMAL position to the STAND-BY position. When the alarm condition has been corrected, the alarm will sound. The switch must then be returned to the NORMAL position.

NOTE: When the problem has been corrected and the alarm condition no longer exists an alarm will sound reminding the operator to press *Standby* to exit the STANDBY mode.

If the unit is left in the STANDBY mode, none of the alarms listed will sound, alarm lights only will turn on.

Section 3 - Calibration

Calibration must be performed when the unit is at operating temperature.

Required equipment: Accurate low temperature remote bulb thermometer or thermocouple of known accuracy.

3.1 Temperature Display Calibration

Place a measuring device near the probe cover. See Figures 1-4 and 1-5.

1. Allow the unit to stabilize at the operating temperature.
2. Remove the top two screws securing the control panel and loosen the bottom screws.
3. Carefully remove the control panel.
4. Remove the six screws securing the cover of box attached to the inside of the control panel. Remove the cover.
5. Adjust R17 until the control panel display matches the independent measuring device. Several turns of R17 may be required to achieve the desired temperature.
6. Reinstall cover to the box and secure.
7. Check the control temperature set point. Set point may have been altered during the calibration procedure.

3.2 Optional Recorder Calibration

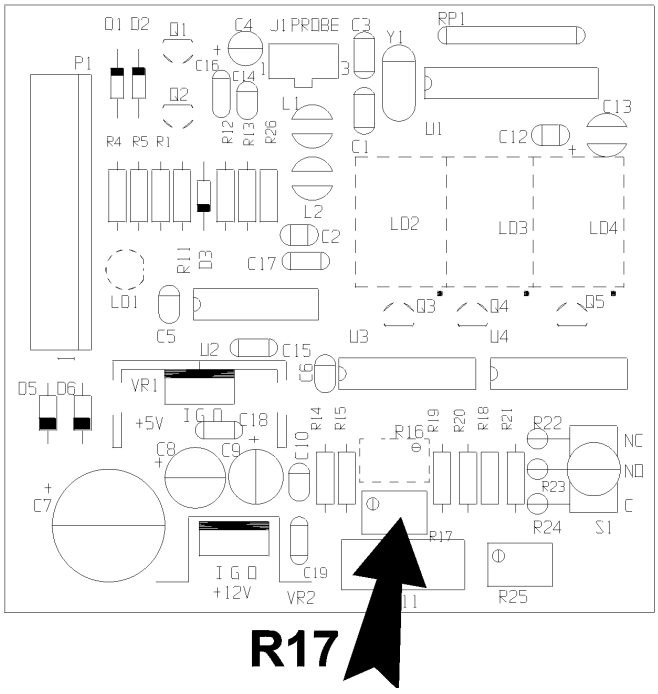

Figure 3-1, Temperature Control Board, showing R-17 Location

a. Changing the recorder range:

The chart recorder contains eight temperature ranges and is factory-programmed for the freezer.

1. Press and hold button #3 for one second, then let the pen move off the chart paper.
2. Press and hold for five seconds either button #1 or button #2.
3. Release the button and the green LED will begin to flash. Count the number of flashes to determine the present program setting.
4. To change the program setting, press the left or right arrows to increase or decrease the count.
5. When the desired program number is flashing, press button #3 to bring the pen arm back onto the chart. Recording will begin in the new program.

NOTE: Changing ranges may require an offset calibration as outlined in Section 3.2.b.

Program No.	Range		
Program 1	-40°C	to	30°C
Program 2	0°C	to	60°C
Program 3	-100°C	to	38°C
Program 4	-5°C	to	50°C
Program 5	0°C	to	100°C
Program 6	-100°C	to	-200°C
Program 7	-115°C	to	50°C
Program 8	-10°C	to	70°C

Table 3-1
Recorder Range Chart

b. Calibrating the chart recorder:

The recorder must be in service for 24 hours before performing the following calibration procedure.

1. Place an accurate thermometer in the chamber next to the recorder probe.
2. Temperature probes for the recorder are located in the left front corner of the freezer chamber (Figure 1-4).
3. After about three minutes, compare the thermometer reading with the chart recorder reading.
4. If an adjustment is necessary, press the #1 button to move the pen to the left or the #2 to move the pen to the right. The button must be held about five seconds before the pen begins to move. Release the button when the pen position matches the thermometer.

NOTE: The felt-tip pen on the recorder requires periodic replacement. Usually the ink will appear to fade before replacement becomes necessary. Additional pen tips may be purchased from Thermo Forma. Refer to Parts List, Section 7.

Thermo Forma

PREVENTIVE MAINTENANCE
SUVA Freezers

Your Thermo Forma equipment has been thoroughly tested and calibrated before shipment. Regular preventive maintenance is important to keep your unit functioning properly. The operator should perform routine cleaning and maintenance on a regular basis. For maximum performance and efficiency, it is recommended that the unit be checked and calibrated periodically by a qualified service technician.

The following is a condensed list of preventive maintenance requirements. See the specified section of the instruction manual for further details.

Thermo Forma has qualified service technicians, using NIST traceable instruments, available in many areas. For more information on Preventive Maintenance or Extended Warranties, please contact us at the number below.

Cleaning and calibration adjustment intervals are dependent upon use, environmental conditions and accuracy required.

Tips:
• Fill an upright by starting at the bottom near the probe and add racks to one shelf at a time. Allow freezer to recover to setpoint between shelves.
• Fill a chest by starting at the left side near the probe. Filling with room temperature racks will result in a long pull-down time.
• Fill unit with frozen product to help overall performance; frozen water jugs, for example.
• Always make certain the vacuum relief port is free of frost and ice, to allow for timely re-entry into the freezer after a door opening.

•Millcreek Road, Box 649 •Marietta, Ohio 45750 USA •740-373-4763
•USA and Canada 888-213-1790 •Telefax: 740-373-4189 •email: service@thermoforma.com

Preventive Maintenance for 900 Series Freezers

Refer to Manual Section	Action	Monthly	Yearly	Every 2 Years
--	Verify ambient temperature, <90°F	☑		
--	* Adjust door handle for firm latching, as needed	☑		
Figure 1-4 probe location 4.5	Check and clean probe and cover, gaskets, hinges, doors and vacuum relief port free of ice and snow.	☑ *More frequent cleaning may be required, depending on use and environmental conditions.*		
4.2	Check air filter. Clean or replace as needed	☑		
1.7	Check alarm back-up battery.	☑		** Replace
--	Check condenser fan motor for unusual motor noise or vibration.		☑	
--	* Verify and document calibration, at the minimum, annually.		☑	
4.3	* Clean condenser compartment and wipe off condenser		☑	

* Qualified service technicians only
** Dispose of properly, according to all state and federal regulations.

Section 4 - Routine Maintenance

4.1 Cleaning the Cabinet Exterior

Avoid the excessive use of water around control area due to the risk of electrical shock. Damage to the controls may also result.

Wipe down the freezer exterior using soap and water and a general use laboratory disinfectant. Rinse thoroughly with clean water and dry with a soft cloth.

4.2 Cleaning the Air Filter (minimum of twice a year*)

1. Locate the grille on the right side of control panel. See Figure 1-2. Grasp the corner of the grille and gently pull to remove.
2. Remove the filter material and wash, using water and a mild detergent.
3. Dry by pressing between two towels.
4. Install the filter back into the grille and attach the grille.

* Depending upon environmental conditions, the filter may need to be cleaned or replaced more frequently. If the filter becomes torn or excessively dirty, a replacement can be purchased from Thermo Forma. See the exploded parts list, Section 7, for filter part number. A filter kit (set of 5) part number 195517 is also available.

4.3 Cleaning the Condenser (minimum of twice a year*)

1. Locate the grille on the right side of control panel. See Figure 1-2. Grasp the corner of the grille and gently pull to remove.
2. Using a vacuum cleaner, exercising care to not damage the condenser fins, clean the condenser.
3. Install the grille.

* Depending upon environmental conditions, the condenser may need to be cleaned more frequently.

a. Cleaning the Water-cooled Condenser

The water-cooled condenser can be cleaned-in-place by using the CIP procedure. Cleaning solutions can be used, depending on type of deposits or build-up to be removed.

Do not use liquids that are corrosive to stainless steel or the brazing material (copper or nickel). Do not leave the unit on stand-by after cleaning.

CIP (Clean-In-Place) Procedure

1. Disconnect the unit from the water supply.
2. Drain the unit.
3. Rinse with fresh water and drain the unit again.
4. Fill with fresh water.
5. Add cleaning agent (solution and concentration dependent on deposits or build-up).
6. Circulate cleaning solution (if feasible).
7. Drain the cleaning solution.
8. Add and circulate a passivating liquid for corrosion inhibition of plate surfaces.
9. Drain this liquid.
10. Rinse with fresh water and drain.
11. Reconnect the water supply and fill the unit.
12. Return to service.

4.4 Defrosting the Chamber

1. Remove all product and place it in another freezer.
2. Turn the unit off and disconnect it from the power source.
3. Turn the Alarm switch to Standby, or disconnect the battery.
4. Open all of the doors and place towels on the chamber floor.
5. Allow the frost to melt and become loose.
6. Remove the frost with a soft cloth.
7. After defrosting is complete, clean the interior with a non-chloride detergent. Rinse thoroughly with clean water and dry with a soft cloth.
8. Plug unit in and turn power switch on.
9. Allow the freezer to operate empty overnight before reloading the product.

4.5 Cleaning the Door Gasket (minimum monthly*)

Using a soft cloth, remove any frost build-up from the gasket and door(s).

**The door gasket may need to be cleaned more frequently if dirt or excessive frost build-up prevents the door from closing properly.*

4.6 Cleaning the Vacuum Relief Port (minimum monthly*)

Using a soft cloth, remove any frost build-up from the vacuum relief, located in the front left corner of the chamber. See Figure 1-4 and 1-5.

The vacuum relief port contains a small heating element. If the freezer is not disconnected from the electrical supply or turned off at the power switch, the heating element will continue to operate and may cause injury to personnel cleaning the freezer chamber.

*The vacuum relief port may need to be cleaned more frequently if dirt or excessive frost buildup prevents the door from closing properly.

4.7 Replacing the Battery

For a consistent and dependable charge, replace the battery every 2 years. Replacement batteries must be rechargeable and are available from Thermo Forma. Refer to the parts list for stock number and description of the replacement batteries.

Dispose of the used batteries in a safe manner and in accordance with good environmental practices.

1. Turn off the power switch and unplug the unit from the AC power supply
2. To gain access to the battery, remove the grille on the front of the freezer. The grille is attached to the freezer by friction plugs on each of the four corners and is readily pulled off. The battery is the rectangle fastened by Velcro to the compressor compartment frame and has a connector with red and black wires. Another red and black wire set with connector is secured to the wiring harness passing through this area of the freezer.
3. Disconnect the two wire connectors, replace the battery pack and secure with the Velcro.
4. Reconnect the battery and replace the grille.
5. Plug unit in and turn power switch on.

4.8 Preparing the Unit for Storage

Defrost the unit as described in Section 4.4. This will prepare the unit for storage.

The battery must be disconnected to prevent the battery from becoming completely discharged during storage.

Section 5 - Service

Servicing must only be performed by service personnel who are qualified to repair cascade refrigeration systems. Always use standard safety practices when servicing the equipment.

5.1 Servicing the Refrigeration System

Before opening the refrigeration system, use the troubleshooting chart to check out the electrical system. Electrical schematics and refrigeration drawings with parts are included with this manual.

Refer to the troubleshooting chart on the following page.

CAUTION

Contains Parts and Assemblies Susceptible to Damage by Electrostatic Discharge (esd)

5.2 Troubleshooting Chart

Symptom	Possible Cause
No Temperature Display	• Power line cord disconnected or not properly installed • External power circuit breaker tripped/open • Main power switch OFF • 24 volt transformer fuses open.
Chamber Temperature Deviates from Set Point	• Too much warm product added • Door open too long • Inadequate air circulation • Calibration • Dirty condenser • High ambient temperature
Too Much Frost Build-Up	• Door not properly sealed.
Freezer not Being Refrigerated (unit is receiving power)	• Compressor thermal overload open • Loss of refrigerant in either system • Defective compressor(s) • Defective temp control • Defective high pressure cut-off
Display Problems in General	• Defective temp control board.
Condenser Hot Light On	• Clogged air filter • Clogged condenser • Fan failure
Cannot Open Door After Recent Door Opening	• Vacuum relief port is clogged with ice. • Vacuum relief heater is not functioning • See Section 4.6 - Cleaning the Vacuum Relief Port

Section 6 - Specifications

MODEL 923/983

Temperature Range	-50°C (-58°F) to -86°C (-123°F)
Exterior Dimensions	40.8" W x 77.9" H x 37.0" F-B (103.6cm x 197.9cm x 94.0cm)

Add 3.0" (7.6cm) to W for latch/hinge; add 6.5" (16.5cm) to F-B for control panel/wall spacer.
23 cu. ft. freezer will pass through a 34.0" (86.4cm) doorway with door open and base front panel removed.

Interior Dimensions	30.6" W x 51.5" H x 25.25" F-B (77.7cm x 130.8cm x 64.3cm)
Capacity	23 cu. ft. (651.3 liters)
Refrigeration	Cascade system, (2) hermetically-sealed compressors
Insulation	Non-CFC, foamed-in-place urethane; 5.0" (12.7cm) sides; 4.5" (11.4cm) door
Electrical	**923, 983** 230VAC, 1 PH, 50/60 Hz, 12.0 FLA Operating Range: 208VAC - 240VAC
Breaker Requirements	**923, 983:** 15 Amp, 230V
Automatic Voltage	**Low:** Cut In: 210V Cut Out: 220V Volts Boost: 18 **High:** Cut In: 235V Cut Out: 225V Volts Buck: 18
Shipping Weight	**Ocean:** 1140 lbs. (517.1 kg) **Air/Container:** 880 lbs. (399.2 kg) **Motor:** 880 lbs. (399.2 kg)

Thermo Forma - Representative Pulldown and Cycling Curve

for 23 Ft.3 -86°C Freezers

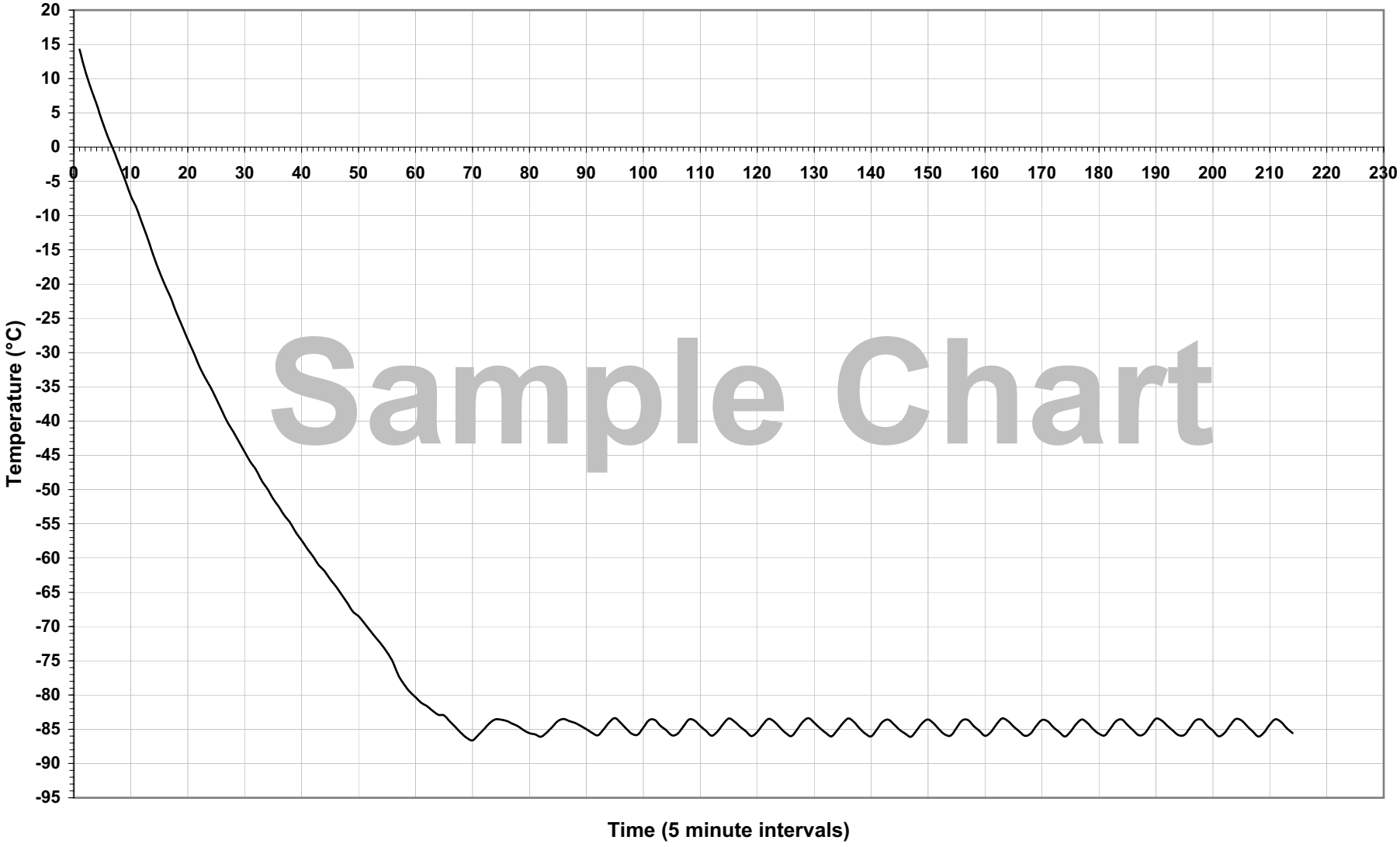

23ft3-86.xls 2/02

134	227928	Low stage cap. tube
135	227927	High stage cap. tube
136	209016	Dryer
137	211028	Heat exchanger

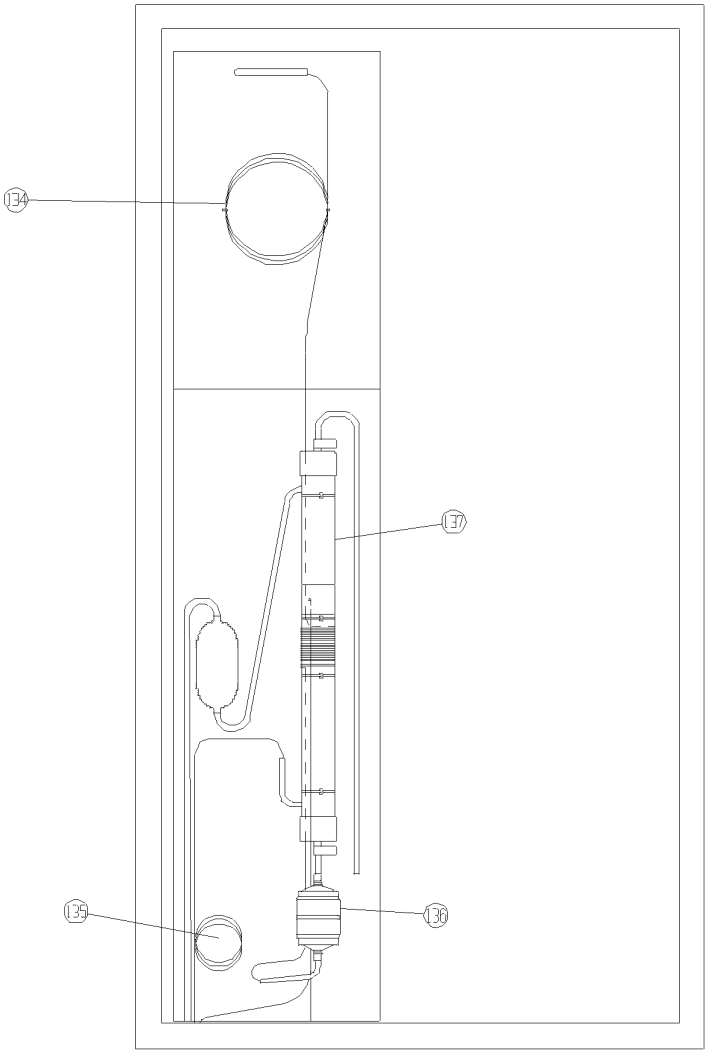

HEAT EXCHANGER ASSEMBLY

8516-206-0-0 REV. D
Page 1 of 1

1	195570	Door (13 & 17 cuft)
	195649	Door (23 cuft)
	195650	Door (28 cuft)
2	189934	Handle
	195548	Handle (28 cuft)
3	510022	#10-32 x 1/2 Hex head screw
4	121062	Cam latch strike
5	20003	1/4-20 x 3/4 Bolt
6	23062	1/4 Star washer
7	24042	#8-32 x 1/2 F screw
8	510303	Cam latch
9	189192	.063 Shim
	189288	.125 Shim
10	22115	#6-32 Screw
11	23020	#6 Washer
12	23015	#6-32 Cap nut
13	420308	Door gasket (13&17 cuft)
	420309	Door gasket (23 cuft)
	103104	Door gasket (28 cuft)
14	116092	Door hinge
15	189287	Door stop (23 & 28 cuft only)
16	201120	Recorder
17	245231	Recorder pen
18	195170	Interior door (4 door 13&17 cuft)
	195171	Interior door (4 door 23 cuft)
	195233	Interior door (5 door 13&17 cuft)
	195234	Interior door (5 door 23 cuft)
	195511	Interior door (4 door 28 cuft)
19	285658	Knob (13, 17 & 23 cf)
	120400	Knob (28 cf)
20	23043	Washer
21	195169	Latch
22	515083	Spacer
23	23044	Shoulder washer
24	23021	Flat washer
25	23080	Spring washer
26	590008	#8-32 x 7/8 screw
27	23023	1/4 Flat washer
28	23033	1/4 Int. lockwasher
29	510305	Washer
30	121032	Latch
31	23057	Washer
32	20058	1/4 x 3/4 Screw

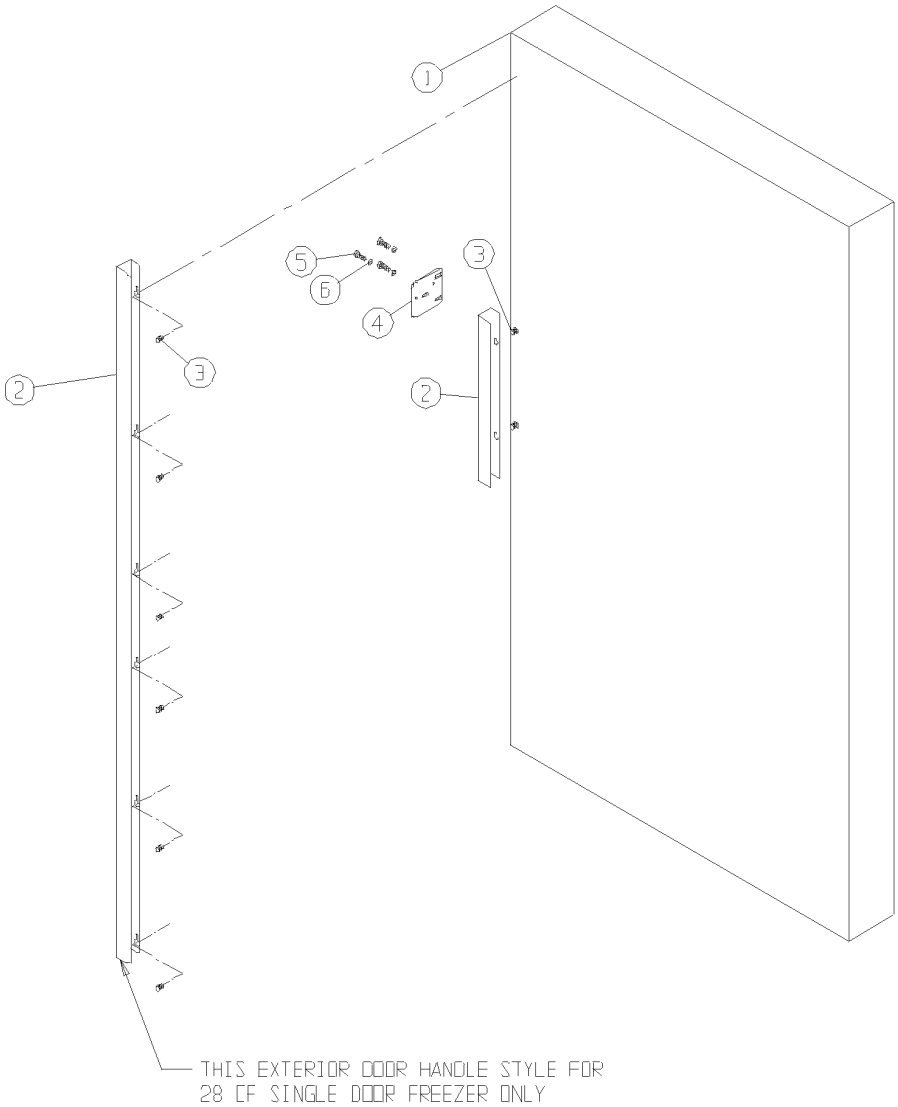

SINGLE DOOR CABINET ASSEMBLY

916-20D-0-D REV. 4
Page 1 of 2

33	189532	Probe Guard
34	195176	Probe mount
35	114020	Recorder probe gromnet
36	30073	Control/alarm probe gromnet
37	290165	Control/alarm probe
38	500177	Pilaster (900 only)
39	500175	Pilaster clip (flat) (900 only)
	500184	Pilaster clip (tab) (900 only)
40	22051	8-32 x 1/4 SS PHP screw
41	195602	Interior door latch tab
42	23010	8-32 SS hex nut
43	195614	Interior door latch

NOT SHOWN:

830011	Shelf (13 & 17 cuft)
830025	Shelf (23 cuft)
830028	Shelf (28 cuft)
430263	Line cord (N. American 120V/20A)
430264	Line cord (N. American 230V/15A)
430270	Line cord (Continental Europe)
430272	Line cord (Italy)
430269	Line cord (Great Britian)
430271	Line cord (India)
430273	Line cord (Israel)
430268	Line cord (Australia)

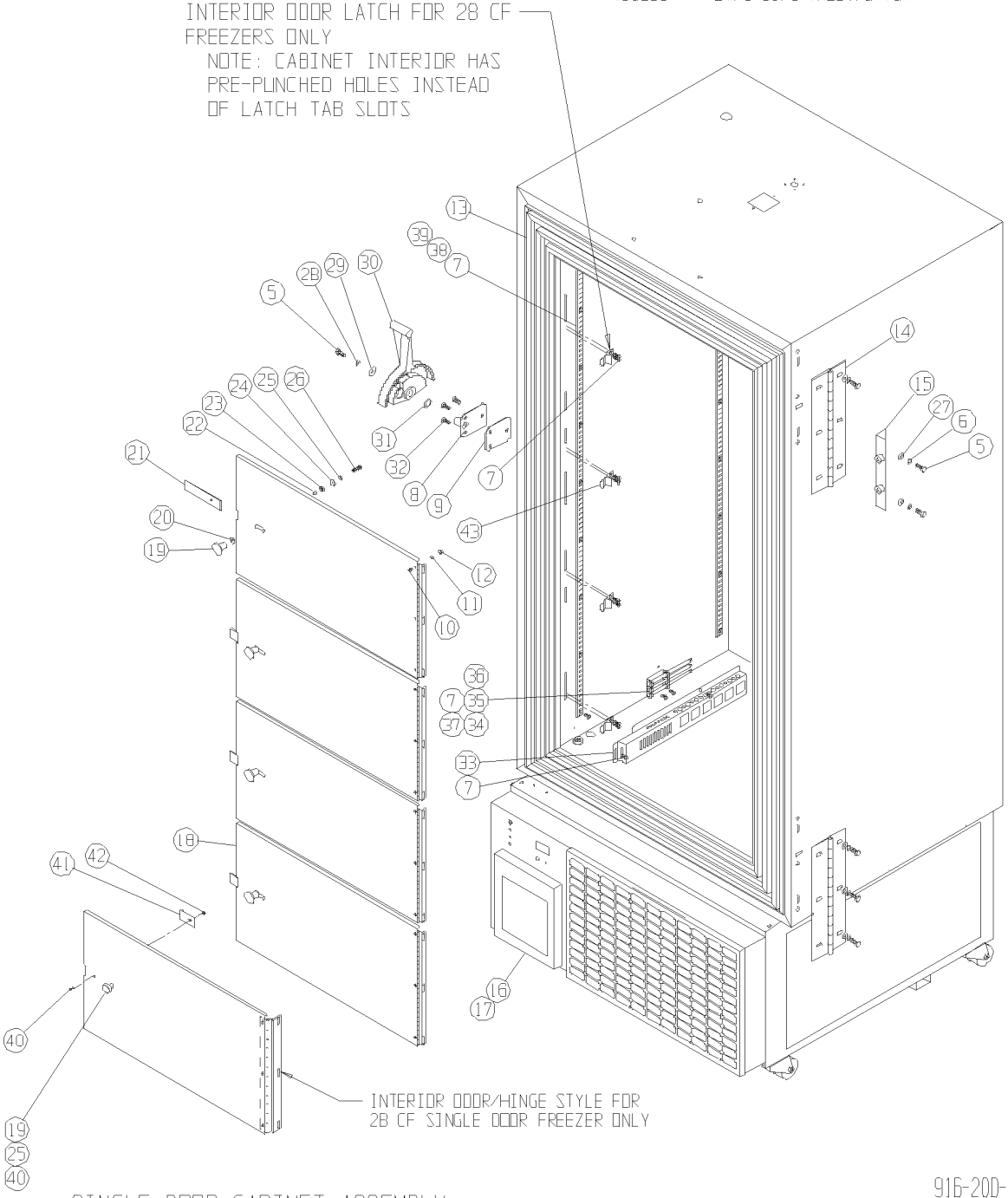

SINGLE DOOR CABINET ASSEMBLY

916-20D-0-D REV. 4
Page 2 of 2

1	195651	Top door (13&17 cuft)
	195656	Bottom door (13&17 cuft)
	195654	Top door (23 cuft)
	195657	Bottom door (23 cuft)
2	189934	Handle
3	510022	#10-32 x 1/2 Hex head screw
4	121062	Cam latch strike
5	20003	1/4-20 x 3/4 Bolt
6	23062	1/4 Star washer
7	24042	#8-32 x 1/2 F screw
8	510303	Cam latch
9	189192	.063 Shim
	189288	.125 Shim
10	22115	#6-32 Screw
11	23020	#6 Washer
12	23015	#6-32 Cap nut
13	103063	Door gasket (13&17 cuft)
	103064	Door gasket (23 cuft)
14	116092	12" Door hinge
	116076	6" Door hinge
15	189287	Door stop (23 cuft only)
16	201120	Recorder
17	245231	Recorder pen
18	195172	Interior top door (13&17 cuft)
	195173	Interior bottom door (13&17 cuft)
	195174	Interior top door (23 cuft)
	195175	Interior bottom door (23 cuft)
19	285658	Knob
20	23043	Washer
21	195169	Latch
22	515083	Spacer
23	23044	Shoulder washer
24	23021	Flat washer
25	23080	Spring washer
26	590008	#8-32 x 7/8 screw
27	23023	1/4 Flat washer
28	23033	1/4 Int. lockwasher
29	510305	Washer
30	121032	Latch
31	23057	Washer
32	20058	1/4 x 3/4 Screw

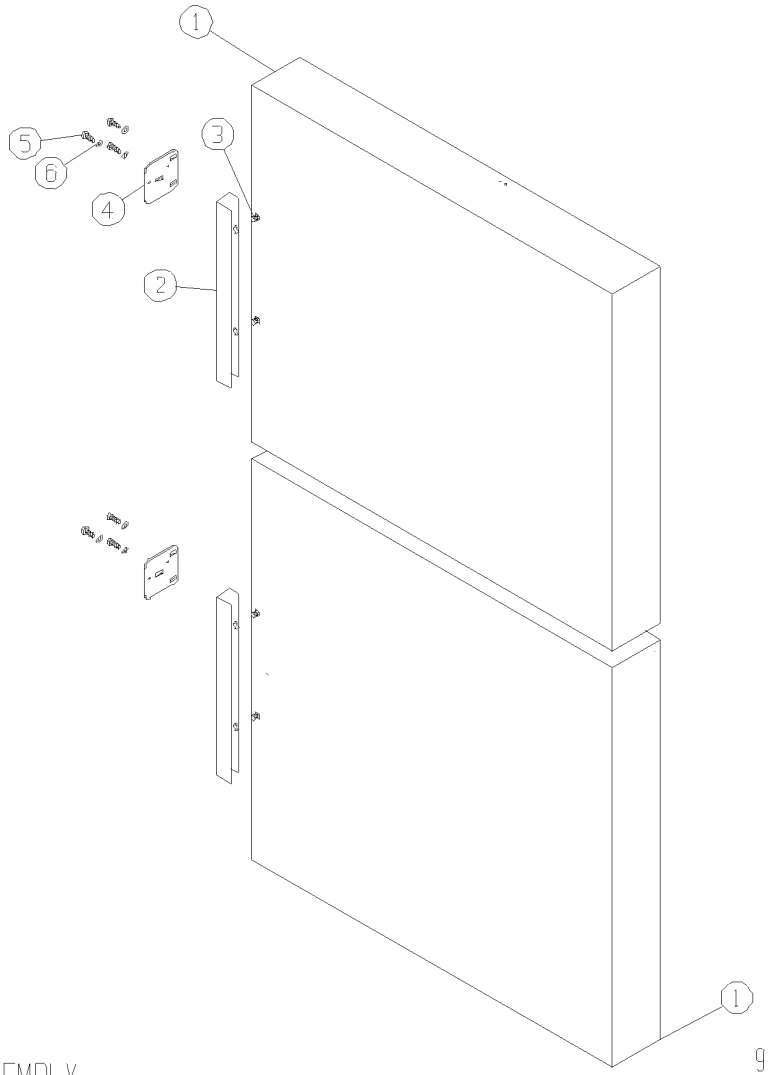

DOUBLE DOOR CABINET ASSEMBLY

916-201-0-D REV. 1
Page 1 of 2

33	189532	Probe Guard
34	195176	Probe mount
35	114020	Recorder probe grommet
36	30073	Control/alarm probe grommet
37	290165	Control/alarm probe
38	500177	Pilaster
39	500175	Pilaster clip (flat)
	500184	Pilaster clip (tab)

NOT SHOWN:

830011	Shelf (13 & 17 cuft)
830025	Shelf (23 cuft)
430263	Line cord (N. American 120V/20A)
430264	Line cord (N. American 230V/15A)
430270	Line cord (Continental Europe)
430272	Line cord (Italy)
430269	Line cord (Great Britian)
430271	Line cord (India)
430273	Line cord (Israel)
430268	Line cord (Australia)

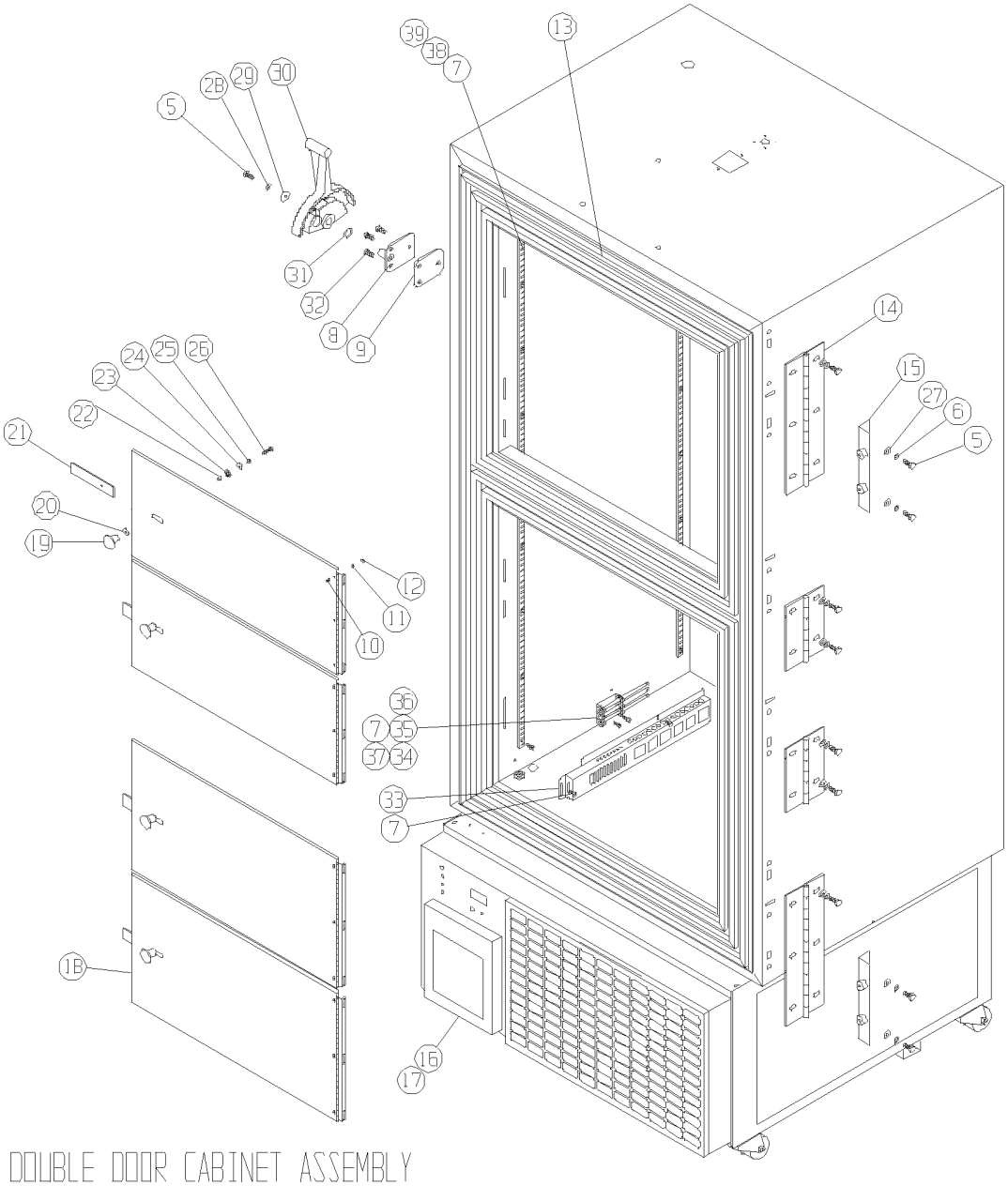

DOUBLE DOOR CABINET ASSEMBLY

916-201-0-D REV. 1
Page 2 of 2

40		
41	195097	Fan shroud
42	510305	Cam latch washer
43	680014	1/4-20 x 2-1/4 bolt
44	515095	5/16 spacer
45	190891	Alarm board
46	191644	Temperature control board
47	220474	Gray window
48	111025	1/8" dia. clamp
49	330005	5/8 split bushing
50	111034	1/4" dia. clamp
50A	111033	3/16" dia. clamp
51	189658	Front grille
52	760162	Air filter
53	189712	Recorder cover plate
54	280060	LED lens
55	400116	Battery
56	195678	Front panel (13 & 17)
	195679	Front panel (23)
57	195382	Boost/Buck LED
58	710002	.125 stud receiver
59	235013	Screwdriver
60	195383	Hot condenser T-stat
61	24038	1/4-20 x 1/2 bolt
62	204009	Condenser
63	207008	Low stage pressure switch
64	207010	High stage pressure switch
65	209020	Dryer
66	200126	2" rigid hanger
67	195094	Air block (13 & 17)
	195096	Air block (23)
68	195761	Main harness
69	195381	Fan harness
70	22130	#4-40 x 1/4 screw
71	440022	Push mount tie wrap

NOT SHOWN:

220553	Rotoloc valve 3/8" (high stage)
220554	Rotoloc valve 1/2" (low stage)

72	23059	#8 Ext. lockwasher
73	590029	#8-32 x 3/8 sems screw w/patch
74	900111	Fan (230V)
	900113	Fan (120V)
75	590020	#8-32 x 3/8 sems screw
76	23002	#8-32 keps nut
77	22054	#10-32 x 1/4 screw
78	23032	#10 Ext. lockwasher
79	189156	Side panel (13)
	189161	Side panel (17&23)
80	214006	Oil separator
81	140204	Control box & cover
82	120011	Caster
83	24030	#8 x 1/2 teks screw
84	195470	Communication port recept. box
85	195223	Rear grille (13 & 17)
	195224	Rear grille (23)
86		
87	490009	#6-32 x 3/8 flathead undercut screw
88		
89	460169	Power inlet
90	230183	Power switch/circuit breaker (120V)
	230184	Power switch/circuit breaker (230V)
91	195410	Relay enclosure cover
92	SEE RELAY ENCLOSURE DRAWING 916-204-0-D	
93	195152	Vacuum relief heater (230V)
	195153	Vacuum relief heater (120V)
94	330003	3/8 split bushing
95	1203019	High stage compressor (230V)
	1203023	High stage compressor (120V)
96	1203022	Low stage compressor (230V
	1203024	Low stage compressor (120)
97	24015	#6 x 3/8 AB screw
98	24032	#8-32 x 3/8 F screw

NOTE FOLLOWING FOR (17,23,28 UNITS ONLY)

98A	300363	8 hr.interval timer (230V)
	300359	8 hr. interval timer (120V)
98B	214018	Expansion tank (2 Req'd. 17 cu. ft. 120V)
98C	220627	Solenoid valve (230V) (NORMALLY OPEN)
	220626	Solenoid valve (120V) (NORMALLY OPEN)
98D	195759	Solenoid harness

BASE ASSEMBLY

916-202-0-D REV. 10
Page 1 of 2

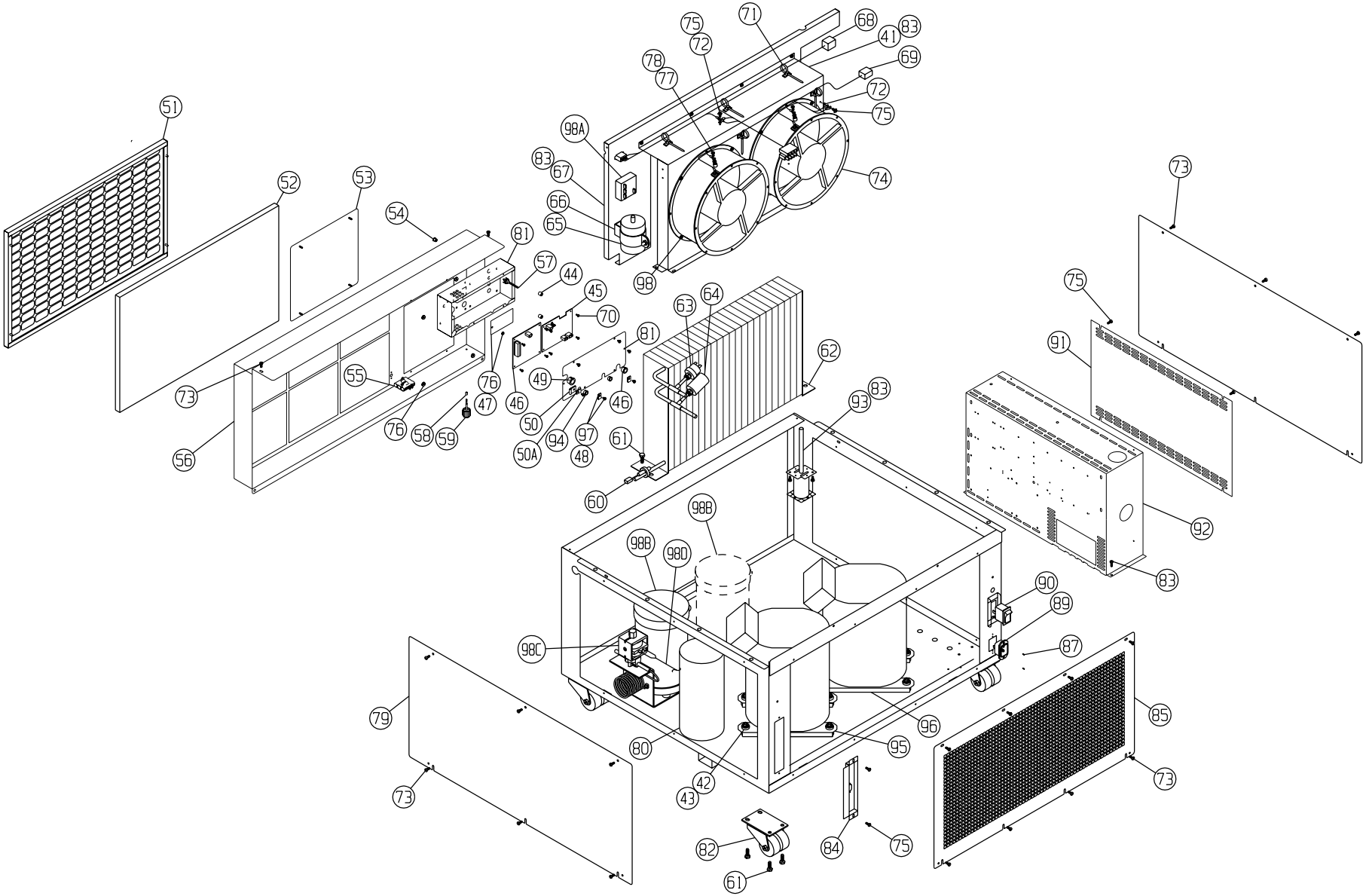

BASE ASSEMBLY

916-202-0-D REV. 10
Page 2 of 2

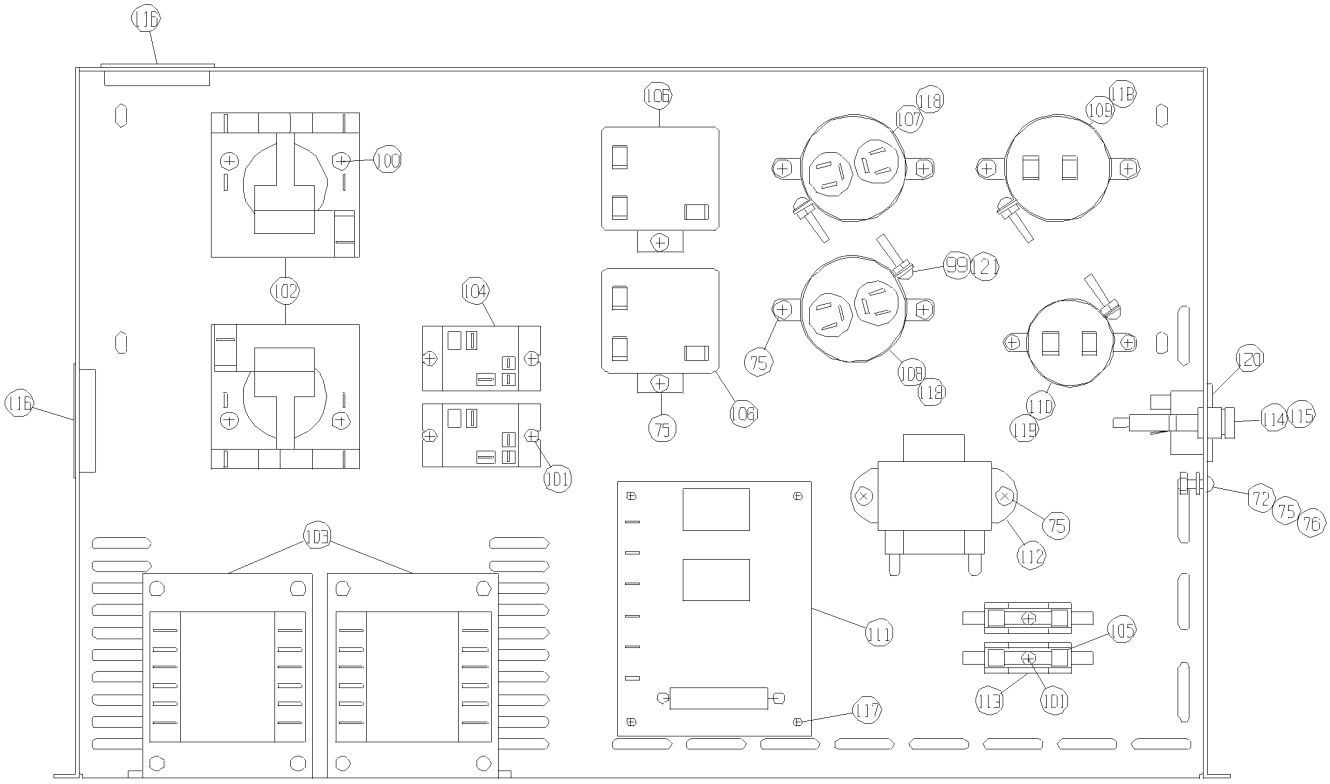

230 Volt relay enclosure

72	23059	#8 Ext. lockwasher
75	590020	#8-32 x 3/8 sens screw
76	23002	#8-32 keps nut
99	23001	#6-32 keps nut
100	22053	#8-32 x 1/2 screw
101	22049	#6-32 x 3/8 screw
102	300073	Boost & buck relay
103	420066	Transformer
104	300261	Relay (Qty. 1, -40°C)
105	230110	1A slo blow fuse
106	300319	High & low stage start relay (H.S. only, -40°C)
107	170145	High stage run capacitor
108	170149	Low stage run capacitor (N/A -40°C)
109	170158	High stage start capacitor
110	170159	Low stage start capacitor (N/A -40°C)
111	191628	Boost/buck board
112	420101	24V transformer
113	230039	Fuse holder
114	285632	Fuse holder
115	230115	.15A slo blow fuse
116	330001	Snap bushing
117	59007	#4-40 x .375 screw
118	170091	1.75 dia. bracket
119	170095	1.438 dia. bracket
120	460024	Outlet
121	22050	#6-32 x 1/2 screw

Relay Assembly

916-204-0-D REV. 3
Page 1 of 2

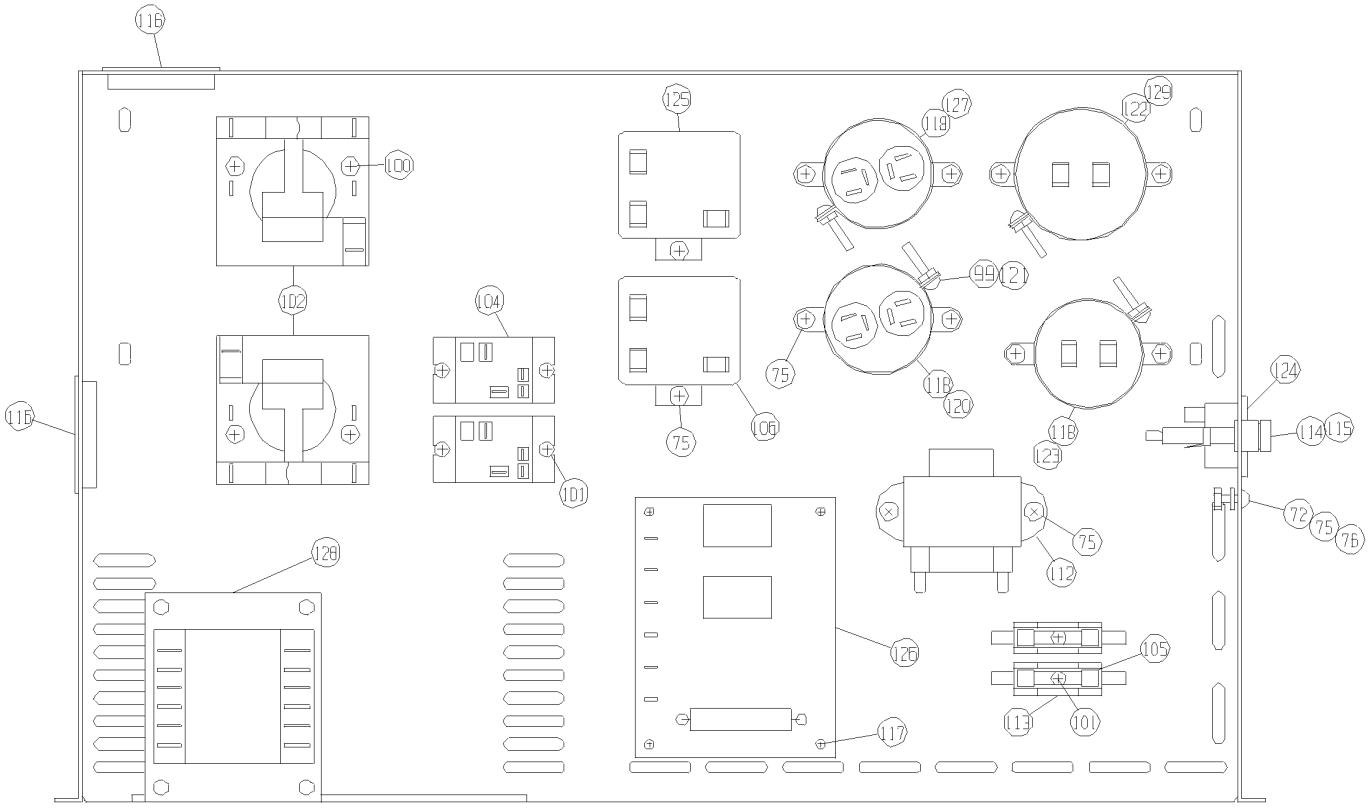

120 Volt relay enclosure

72	23059	#8 Ext. lockwasher
75	590020	#8-32 x 3/8 sens screw
76	23002	#8-32 keps nut
99	23001	#6 keps nut
100	22053	#8-32 x 1/2 screw
101	22049	#6-32 x 3/8 screw
102	300073	Boost & buck relay
104	300261	Relay (Qty. 1, -40°C)
105	230110	1A slo blow fuse
106	300319	Low stage start relay (N/A -40°C)
112	420101	24V transformer
113	230039	Fuse holder
114	285632	Fuse holder
115	230115	.15A slo blo fuse
116	330001	Snap bushing
117	59007	#4-40 x 3/8 screw
118	170091	1.75 dia. bracket
119	170095	1.438 dia. bracket
120	170160	Low stage run capacitor (N/A -40°C)
121	24032	#8-32 x 3/8 F screw
122	170157	2.5 dia. bracket
123	170010	Low stage start capacitor (N/A -40°C)
124	460024	Outlet
125	300323	High Stage Start relay
126	190676	Boost/buck board
127	170108	High stage run capacitor
128	420065	Transformer
129	170155	High stage start capacitor

Relay Assembly

916-204-0-D REV. 3
Page 2 of 2

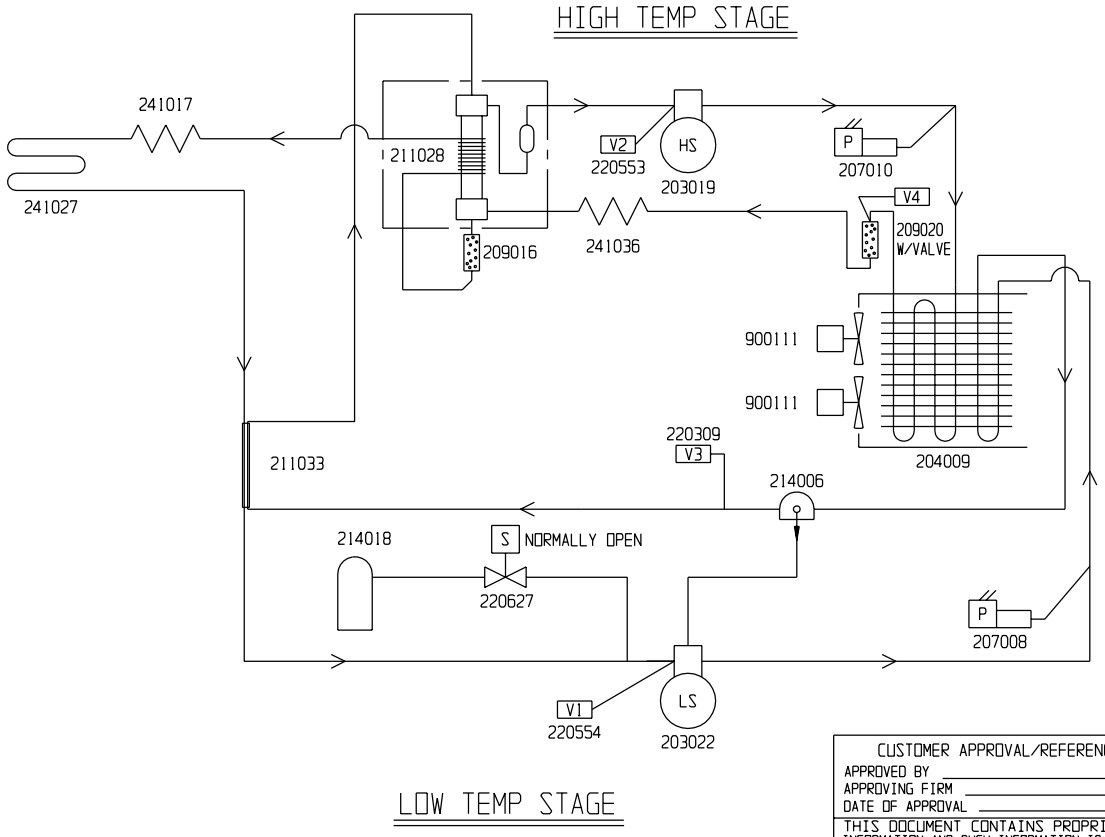

CASCADE REFRIGERATION

HIGH TEMP. STAGE REFRIGERANT: R-404A, 24 OZ. (680gr) ±1/2 OZ. (14gr)

HIGH TEMPERATURE STAGE OIL: MOBILE EAL ARCTIC 22CC POLYOL ESTER OIL
COMPRESSOR, 24 OZ.(710ml)

LOW TEMP. STAGE REFRIGERANT: R-290 1.0 OZ. (28gr) MAX. ; VAC TO 5 PSIG
R-508B 17.3 OZ. (490gr) ± 1/4 OZ. (7gr)
OR 5 PSIG TO 152 PSIG ± 3 PSIG

LOW TEMPERATURE STAGE OIL: ZEROL 150T WITH 2% ADDITIVE
COMPRESSOR: 24 OZ.(710ml)
OIL SEPARATOR: 15 OZ. (444ml)

* ALL PSIG MEASUREMENTS WHEN SYSTEM IS AT 23°C

1. COMMON TO: 723, 923, 983, 8523, 8584, 5463 & 5423 23 CU.FT. FREEZERS

CUSTOMER APPROVAL/REFERENCE
APPROVED BY
APPROVING FIRM
DATE OF APPROVAL

THIS DOCUMENT CONTAINS PROPRIETARY INFORMATION AND SUCH INFORMATION IS NOT TO BE DISCLOSED TO OTHERS FOR ANY PURPOSE NOR USED FOR MANUFACTURING PURPOSES WITHOUT WRITTEN PERMISSION FROM THERMO FORMA

REV	ECR NO.	DATE	BY	CAD	APPD	DESCRIPTION OF REVISION
17	FR-1616	10-02-02	RDS	KDG	CCS	REMOVE CAP TUBING TO EXP. TANK
16	FR-1616	05-21-02	DAS	KDG	LDN	REV. LOW STAGE REFRIG. CHARGES
15	FR-1606	05-08-02	RDS	KDG	LDN	NOTED SOLENOID AS NORMALLY OPEN
14	FR-1557	02-25-02	AFC	KDG	LDN	ADDED 241036 CAP. TUBE TO 220627
13	FR-1557	11-12-01	LDC	KDG	LDN	ADDED EXPANSION TANK, REL. 11

DATE 04-21-98 | DWN LDC | CAD LDC | APPD LDN | SCALE NONE
CUSTOMER
JOB TITLE -86°C 23 CU. FT. UPRIGHT FREEZERS
DWG TITLE REFRIGERATION SCHEMATIC
LOCATION | JOB NUMBER | DRAWING NUMBER 8523-90-0-B

Thermo Forma
BOX 649, MARIETTA, OHIO 45750

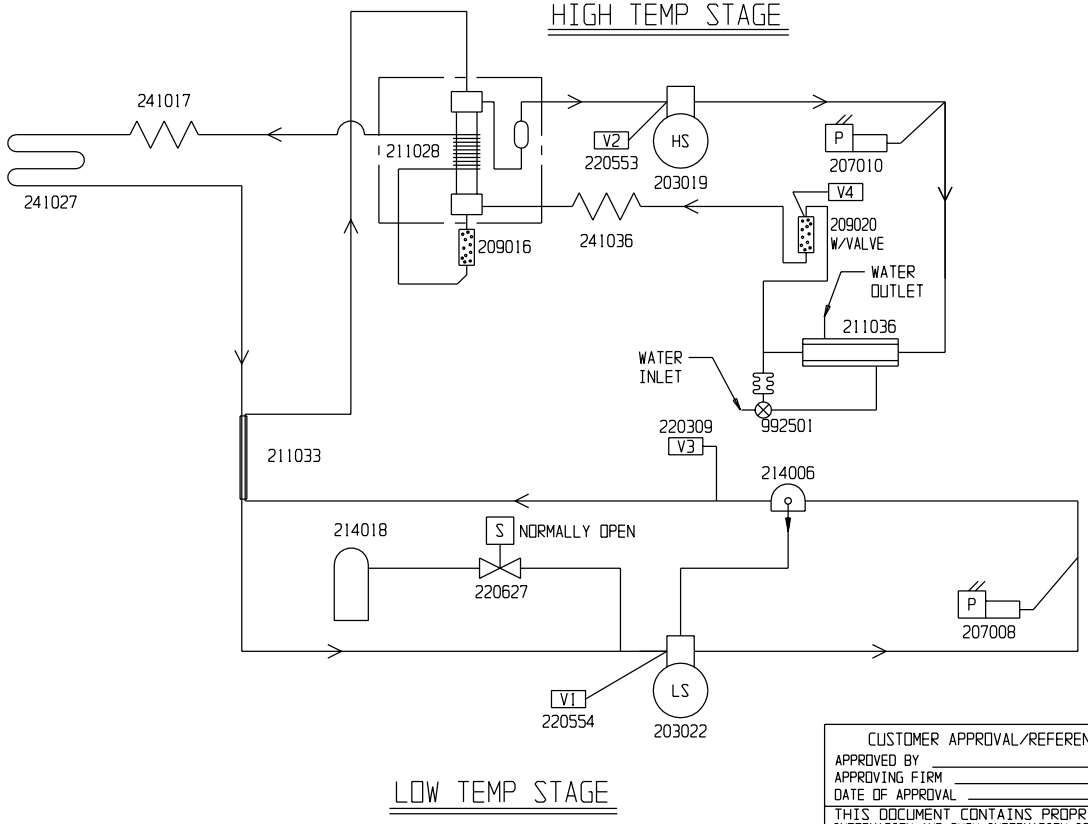

CASCADE REFRIGERATION

HIGH TEMP. STAGE REFRIGERANT: R-404A, 24 OZ. (680gr) ±1/2 OZ. (14gr)

HIGH TEMPERATURE STAGE OIL: MOBILE EAL ARCTIC 22CC POLYOL ESTER OIL
COMPRESSOR, 24 OZ.(710ml)

23 CUFT UNITS:
LOW TEMP. STAGE REFRIGERANT: R-290 1.0 OZ. (28gr) MAX. ; VAC TO 5 PSIG
R-508B 17.3 OZ. (490gr) ± 1/4 OZ. (7gr)
OR 5 PSIG TO 152 PSIG ± 3 PSIG

28 CUFT UNITS:
LOW TEMP. STAGE REFRIGERANT: R-290 1.0 OZ. (28gr) MAX. ; VAC TO 4 PSIG
R-508B 17.7 OZ. (502gr) ± 1/4 OZ. (7gr)
OR 4 PSIG TO 144 PSIG ± 3 PSIG

LOW TEMPERATURE STAGE OIL: ZEROL 150T WITH 2% ADDITIVE
COMPRESSOR: 24 OZ.(710ml)
OIL SEPARATOR: 15 OZ. (444ml)

* ALL PSIG MEASUREMENTS WHEN SYSTEM IS AT 23°C

*** SET WATER REGULATING VALVE AT 170 PSIG

CUSTOMER APPROVAL/REFERENCE
APPROVED BY
APPROVING FIRM
DATE OF APPROVAL

THIS DOCUMENT CONTAINS PROPRIETARY INFORMATION AND SUCH INFORMATION IS NOT TO BE DISCLOSED TO OTHERS FOR ANY PURPOSE NOR USED FOR MANUFACTURING PURPOSES WITHOUT WRITTEN PERMISSION FROM THERMO FORMA

REV	ECR NO.	DATE	BY	CAD	APPD	DESCRIPTION OF REVISION
7	FR-1616	10-02-02	RDS	KDG	CCS	REMOVE CAP TUBING TO EXP. TANK
6	FR-1616	05-21-02	DAS	KDG	LDN	REV. LOW STAGE REFRIG. CHARGES
5	FR-1606	05-08-02	RDS	KDG	LDN	NOTED SOLENOID AS NORMALLY OPEN
4	FR-1557	02-25-02	AFC	KDG	LDN	ADDED 241036 CAP. TUBE TO 220627
3	FR-1557	11-15-01	AT	KDG	LDN	ADDED EXPANSION TANK 214018

DATE 12-10-99 | DWN CAW | CAD CAW | APPD CAW | SCALE NONE
CUSTOMER
JOB TITLE -86°C 23 & 28 CU. FT. UPRIGHT H2O COOLED FREEZERS
DWG TITLE REFRIGERATION SCHEMATIC
LOCATION | JOB NUMBER | DRAWING NUMBER 195611-90-0-B

Thermo Forma
BOX 649, MARIETTA, OHIO 45750

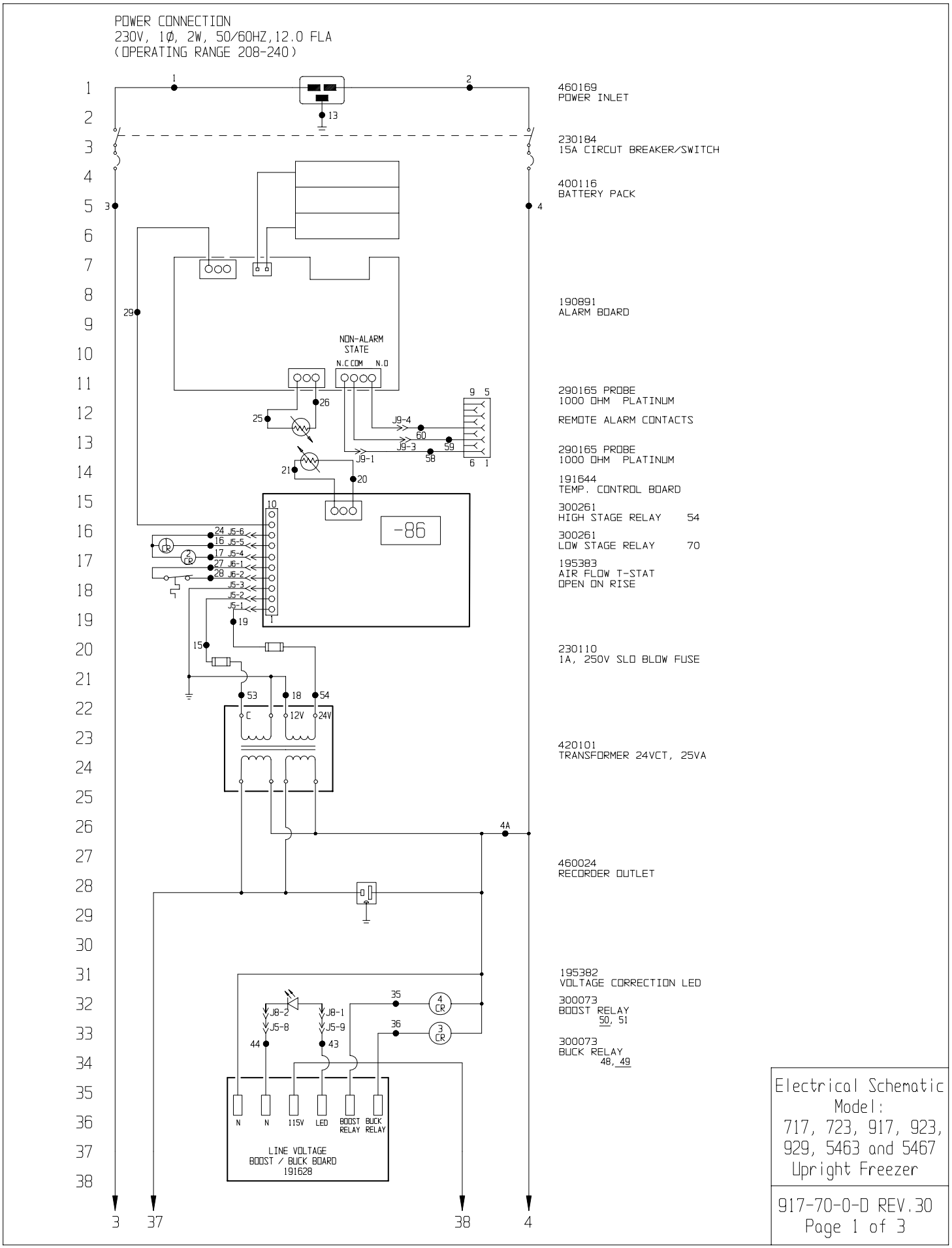
POWER CONNECTION
230V, 1Ø, 2W, 50/60HZ,12.0 FLA
(OPERATING RANGE 208-240)
460169
POWER INLET
230184
15A CIRCUT BREAKER/SWITCH
400116
BATTERY PACK
190891
ALARM BOARD
NON-ALARM
STATE
N.C COM N.O
290165 PROBE
1000 OHM PLATINUM
REMOTE ALARM CONTACTS
290165 PROBE
1000 OHM PLATINUM
191644
TEMP. CONTROL BOARD
300261
HIGH STAGE RELAY 54
300261
LOW STAGE RELAY 70
195383
AIR FLOW T-STAT
OPEN ON RISE
-86
230110
1A, 250V SLO BLOW FUSE
420101
TRANSFORMER 24VCT, 25VA
460024
RECORDER OUTLET
195382
VOLTAGE CORRECTION LED
300073
BOOST RELAY
50, 51
300073
BUCK RELAY
48, 49
LINE VOLTAGE
BOOST / BUCK BOARD
191628
N N 115V LED BOOST RELAY BUCK RELAY
Electrical Schematic
Model:
717, 723, 917, 923,
929, 5463 and 5467
Upright Freezer
917-70-0-D REV.30
Page 1 of 3

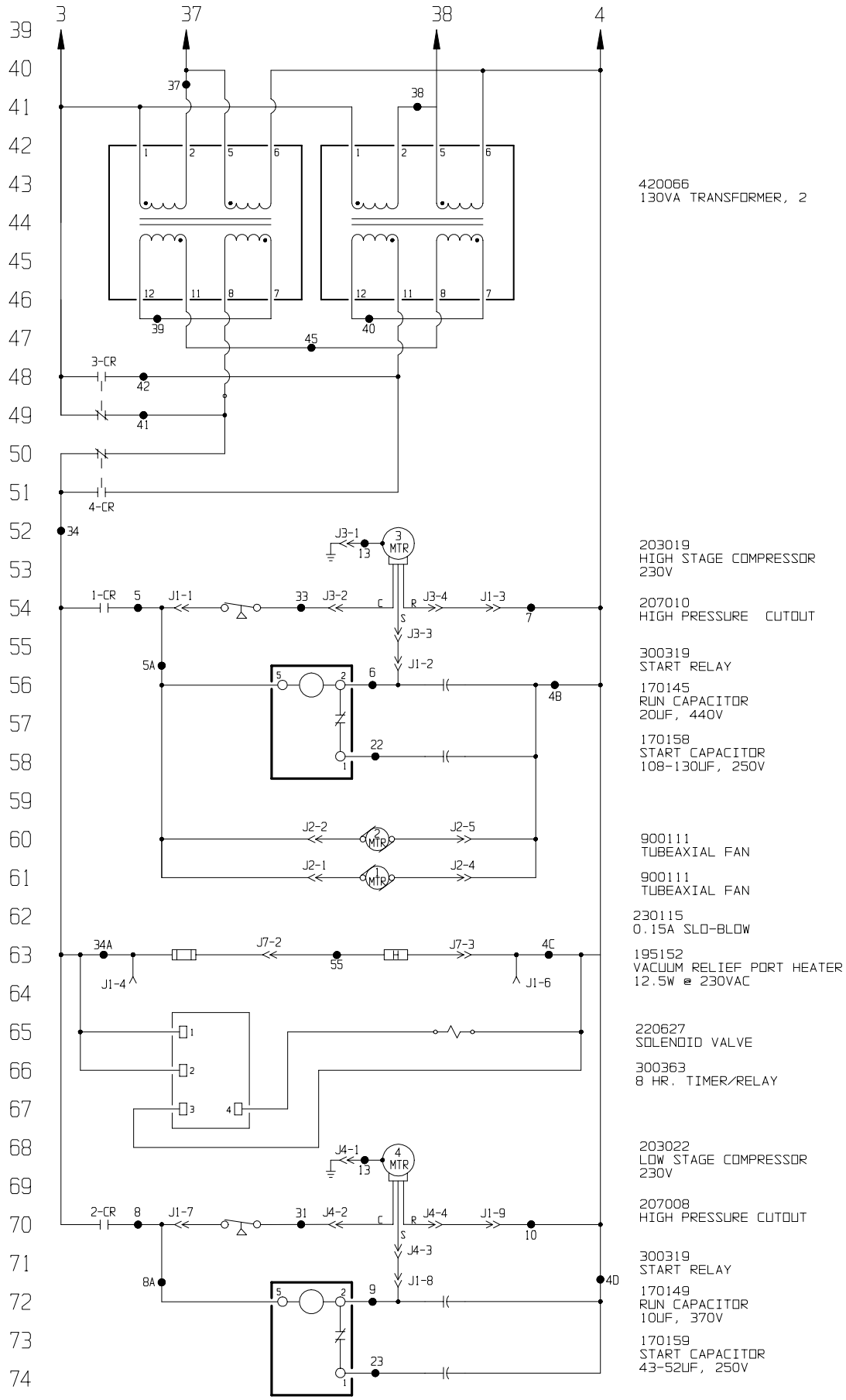

Electrical Schematic
Model:
717, 723, 917, 923,
929, 5463 and 5467
Upright Freezer

917-70-0-D REV.30
Page 2 of 3

WIRE REFERENCE CHART

WIRE #	GAUGE	COLOR
1	14	BRN
2	14	BLU
3	14	BRN
4	14	BLU
4A	18	BLU
4B	18	BLU
4C	18	BLU
4D	18	BLU
5	14	BRN
5A	18	BRN
6	18	RED
7	14	YEL
8	14	BLK
8A	18	BLK
9	18	PUR
10	14	ORG
13	14	GRN/YEL
15	22	RED
16	22	YEL
17	22	ORG
18	22	BLK
19	22	WHT
20	22	RED
21	22	WHT
22	18	GRY
23	18	GRY
24	22	BLU
25	22	RED

WIRE REFERENCE CHART

WIRE #	GAUGE	COLOR
26	22	WHT
27	22	BLK
28	22	BLK
29	22	BLK
31	14	BLK
33	14	BRN
34	14	BRN
34A	18	BRN
35	18	ORG
36	18	YEL
37	18	BLK
38	18	BLK
39	14	ORG
40	14	ORG
41	14	RED
42	14	GRY
43	18	RED
44	18	BLU
45	14	YEL
48	18	BRN
53	22	RED
54	22	WHT
55	18	BRN
58	24	RED
59	24	BLK
60	24	WHT

REMOTE CONTACTS
PIN# 1 NORMALLY CLOSED
PIN# 2 COMMON
PIN# 3 NORMALLY OPEN

CONTACT RATING: 1A @ 30V

REV	ECN NO.	DATE	BY	CAD	APPD	DESCRIPTION OF REVISION
30	FR-1557	12-07-01	AT	KDG	AKS	CORRECT 10.0 FLA RATING TO 12.0 FLA
29	FR-1557	10-26-01	AT	KDG	LDN	ADDED TIMER & SOLENOID (REL.11)
28	FR-1441	09-11-00	RSB	KDG	LDN	CHANGE 190860 TEMP. BOARD TO 191644
27	FR-1402	05-24-00	AT	GLS	LDN	REVISED ALARM BD PWR CONNECTION
26	FR-1357	01-31-00	AT	KDG	LDN	CHG. H.S. RUN CAPACITOR FROM 170097

ATTENTION
OBSERVE PRECAUTIONS
ELECTROSTATIC
SENSITIVE DEVICES

THIS DOCUMENT CONTAINS PROPRIETARY INFORMATION AND SUCH INFORMATION IS NOT TO BE DISCLOSED TO OTHERS FOR ANY PURPOSE NOR USED FOR MANUFACTURING PURPOSES WITHOUT WRITTEN PERMISSION FROM THERMO FORMA

Thermo Forma
BOX 649, MARIETTA, OHIO 45750

MODEL/PART NAME: 717, 723, 917, 923, 929, 5463 & 5467 UR FREEZERS
DWG TITLE: ELECTRICAL SCHEMATIC
DWN: AT | CAD: AT | APPD: CBL | DATE: 7-2-96 | SCALE: NONE
MATERIAL:
PAINT COLOR:
TOLERANCE UNLESS OTHERWISE SPECIFIED
ANGLES: DECIMAL: .XX=± .XXX=±
DRAWING NUMBER 917-70-0
SIZE D

Electrical Schematic
Model:
717, 723, 917, 923, 929, 5463 and 5467
Upright Freezer

917-70-0-D REV.30
Page 3 of 3

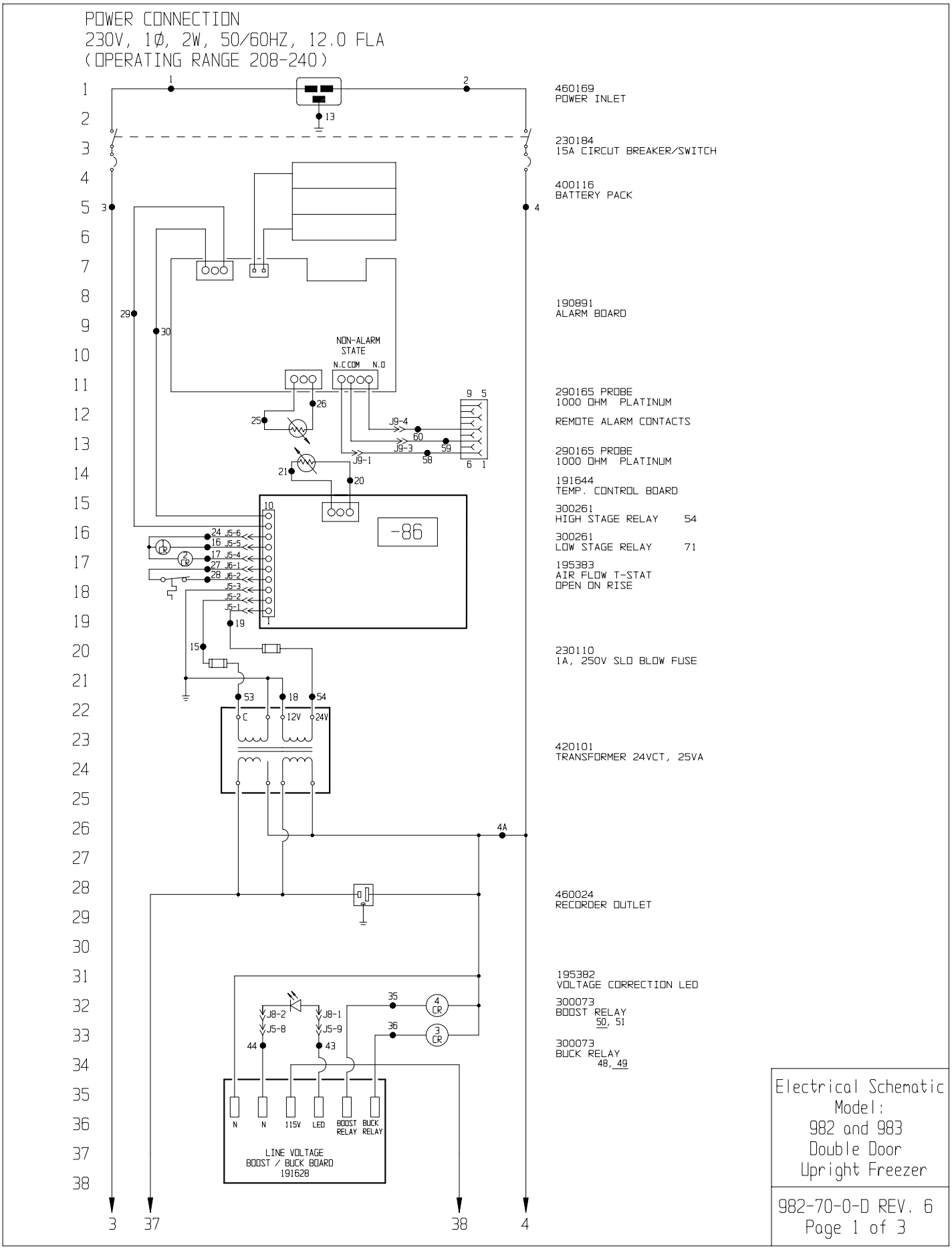
POWER CONNECTION
230V, 1Ø, 2W, 50/60HZ, 12.0 FLA
(OPERATING RANGE 208-240)
460169
POWER INLET
230184
15A CIRCUT BREAKER/SWITCH
400116
BATTERY PACK
190891
ALARM BOARD
NON-ALARM STATE
N.C COM N.O
290165 PROBE
1000 OHM PLATINUM
REMOTE ALARM CONTACTS
290165 PROBE
1000 OHM PLATINUM
191644
TEMP. CONTROL BOARD
300261
HIGH STAGE RELAY 54
300261
LOW STAGE RELAY 71
195383
AIR FLOW T-STAT
OPEN ON RISE
-86
230110
1A, 250V SLO BLOW FUSE
420101
TRANSFORMER 24VCT, 25VA
460024
RECORDER OUTLET
195382
VOLTAGE CORRECTION LED
300073
BOOST RELAY
50, 51
300073
BUCK RELAY
48, 49
N N 115V LED BOOST RELAY BUCK RELAY
LINE VOLTAGE
BOOST / BUCK BOARD
191628
Electrical Schematic
Model:
982 and 983
Double Door
Upright Freezer
982-70-0-D REV. 6
Page 1 of 3

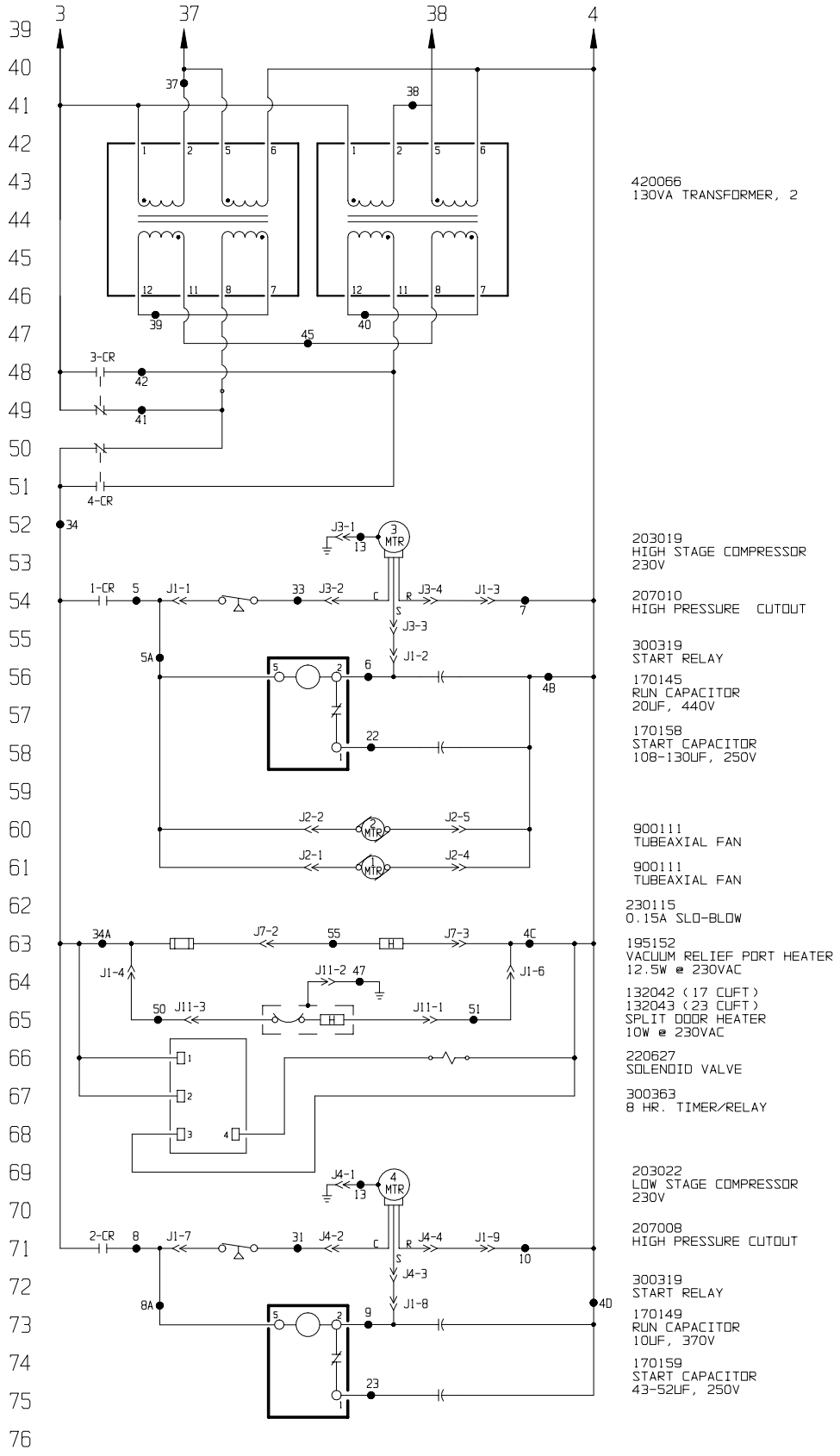

Electrical Schematic
Model:
982 and 983
Double Door
Upright Freezer

982-70-0-D REV. 6
Page 2 of 3

WIRE REFERENCE CHART

WIRE #	GAUGE	COLOR
1	14	BRN
2	14	BLU
3	14	BRN
4	14	BLU
4A	18	BLU
4B	18	BLU
4C	18	BLU
4D	18	BLU
5	14	BRN
5A	18	BRN
6	18	RED
7	14	YEL
8	14	BLK
8A	18	BLK
9	18	PUR
10	14	ORG
13	14	GRN/YEL
15	22	RED
16	22	YEL
17	22	ORG
18	22	BLK
19	22	WHT
20	22	RED
21	22	WHT
22	18	GRY
23	18	GRY
24	22	BLU
25	22	RED

WIRE REFERENCE CHART

WIRE #	GAUGE	COLOR
26	22	WHT
27	22	BLK
28	22	BLK
29	22	RED
30	22	BLK
31	14	BLK
33	14	BRN
34	14	BRN
34A	18	BRN
35	18	ORG
36	18	YEL
37	18	BLK
38	18	BLK
39	14	ORG
40	14	ORG
41	14	RED
42	14	GRY
43	18	RED
44	18	BLU
45	14	YEL
47	18	GRN/YEL
48	18	BRN
50	18	BLK
51	18	WHT
53	22	RED
54	22	WHT
55	18	BRN
58	24	RED
59	24	BLK
60	24	WHT

REMOTE CONTACTS
PIN# 1 NORMALLY CLOSED
PIN# 2 COMMON
PIN# 3 NORMALLY OPEN

CONTACT RATING: 1A @ 30V

REV	ECN NO.	DATE	BY	CAD	APPD	DESCRIPTION OF REVISION
6	FR-1557	12-07-01	AT	KDG	AKS	CORRECT 10.0 FLA RATING TO 12.0 FLA
5	FR-1557	10-26-01	AT	KDG	LDN	ADDED TIMER & SOLENOID (REL.11)
4	FR-1441	09-11-00	RSB	KDG	LDN	CHG. 190860 TEMP. BOARD TO 191644
3	FR-1357	01-31-00	AT	KDG	LDN	CHG. H.S. RUN CAPACITOR FROM 170097
2	SI-7767	01-25-00	AT	PDK	LDN	CHG. BOOST\BUCK BOARD FROM 190677

ATTENTION
OBSERVE PRECAUTIONS
ELECTROSTATIC
SENSITIVE DEVICES

THIS DOCUMENT CONTAINS PROPRIETARY INFORMATION AND SUCH INFORMATION IS NOT TO BE DISCLOSED TO OTHERS FOR ANY PURPOSE NOR USED FOR MANUFACTURING PURPOSES WITHOUT WRITTEN PERMISSION FROM THERMO FORMA

Thermo Forma
BOX 649, MARIETTA, OHIO 45750

MODEL/PART NAME: 982 & 983 DOUBLE DOOR UR FREEZERS
DWG TITLE: ELECTRICAL SCHEMATIC
DWN: AT | CAD: AT | APPD: CBL | DATE: 05-08-98 | SCALE: NONE
MATERIAL:
PAINT COLOR:
TOLERANCE UNLESS OTHERWISE SPECIFIED
ANGLES: DECIMAL: .XX=± .XXX=±
DRAWING NUMBER 982-70-0
SIZE D

Electrical Schematic
Model:
982 and 983
Double Door
Upright Freezer

982-70-0-D REV. 6
Page 3 of 3

THERMO FORMA 900 & 8500 SERIES ULT FREEZER WARRANTY

The Warranty Period starts two weeks from the date your equipment is shipped from our facility. This allows for shipping time so the warranty will go into effect at approximately the same time your equipment is delivered. The warranty protection extends to any subsequent owner during the warranty period.

During the first year of the warranty period, component parts proven to be non-conforming in materials or workmanship will be repaired or replaced at Thermo Forma's expense, labor included. The 900 Series ULT Freezers include a second year warranty on the compressors, parts only, F.O.B. factory. The 8500 Series ULT Freezers include an additional four year warranty on the compressors, parts only, F.O.B. factory. Installation and calibration is not covered by this warranty agreement. The Thermo Forma Service Department must be contacted for warranty determination and direction prior to any work being performed. Expendable items, i.e., glass, filters, pilot lights, light bulbs and door gaskets are excluded from this warranty.

In addition to the standard warranty, effective March 1, 2000, the foamed-in-place cabinet design carries a unit production lifetime warranty. Please contact your sales representative or Thermo Forma for additional information.

Replacement or repair of component parts or equipment under this warranty shall not extend the warranty to either the equipment or to the component part beyond the original one year warranty period. The Thermo Forma Service Department must give prior approval for the return of any components or equipment.

THIS WARRANTY IS EXCLUSIVE AND IN LIEU OF ALL OTHER WARRANTIES, WHETHER WRITTEN, ORAL, OR IMPLIED. NO WARRANTIES OF MERCHANTABILITY OR FITNESS FOR A PARTICULAR PURPOSE SHALL APPLY. Thermo Forma shall not be liable for any indirect or consequential damages including, without limitation, damages relating to lost profits or loss of products.

Your local Thermo Forma Sales Office is ready to help with comprehensive site preparation information before your equipment arrives. Printed instruction manuals carefully detail equipment installation, operation, and preventive maintenance.

If equipment service is required, please call your Thermo Forma Service Office at 1-888-213-1790 (USA and Canada) or 1-740-373-4763. We're ready to answer your questions on equipment warranty, operation, maintenance, service, and special applications. Outside the USA contact your local distributor for warranty information.

ISO 9001 REGISTERED

THERMO FORMA 900 & 8500 SERIES ULT FREEZER INTERNATIONAL DEALER WARRANTY

The Warranty Period starts two months from the date your equipment is shipped from our facility. This allows for shipping time so the warranty will go into effect at approximately the same time your equipment is delivered. The warranty protection extends to any subsequent owner during the warranty period. Dealers who stock our equipment are allowed an additional four months for delivery and installation, providing the warranty card is completed and returned to the Thermo Forma Service Dept.

During the first year of the warranty period, component parts proven to be non-conforming in materials or workmanship will be repaired or replaced at Thermo Forma's expense, labor excluded. The 900 Series ULT Freezers include a second year warranty on the compressors, parts only, F.O.B. factory. The 8500 Series ULT Freezers include an additional four year warranty on the compressors, parts only, F.O.B. factory. Installation and calibration is not covered by this warranty agreement. The Thermo Forma Service Department must be contacted for warranty determination and direction prior to any work being performed. Expendable items, i.e., glass, filters, pilot lights, light bulbs and door gaskets are excluded from this warranty.

In addition to the standard warranty, effective March 1, 2000, the foamed-in-place cabinet design carries a unit production lifetime warranty. Please contact your sales representative or Thermo Forma for additional information.

Replacement or repair of component parts or equipment under this warranty shall not extend the warranty to either the equipment or to the component part beyond the original one year warranty period. The Thermo Forma Service Department must give prior approval for the return of any components or equipment.

THIS WARRANTY IS EXCLUSIVE AND IN LIEU OF ALL OTHER WARRANTIES, WHETHER WRITTEN, ORAL, OR IMPLIED. NO WARRANTIES OF MERCHANTABILITY OR FITNESS FOR A PARTICULAR PURPOSE SHALL APPLY. Thermo Forma shall not be liable for any indirect or consequential damages including, without limitation, damages relating to lost profits or loss of products.

Your local Thermo Forma Sales Office is ready to help with comprehensive site preparation information before your equipment arrives. Printed instruction manuals carefully detail equipment installation, operation, and preventive maintenance.

If equipment service is required, please contact your local distributor or Thermo Forma (1-888-213-1790 in USA and Canada, or 1-740-373-4763). We're ready to answer your questions on equipment warranty, operation, maintenance, service, and special applications. Outside the USA, contact your local distributor for warranty information.

ISO 9001 REGISTERED

Declaration of Conformity

Manufacturer's Name:	Thermo Forma, Inc.
Manufacturer's Address:	401 Millcreek Road Marietta, Ohio 45750 U.S.A.
Product Description:	Laboratory Freezer
Product Designations:	**923**
Year of Initial Marking (CE):	1996
Affected Units:	**Release Level 11** Release Level (REL#) shown on Serial Tag

This product conforms to the following European Union Directive(s):

EMC: 89/336/EEC
LVD: 73/23/EEC

This product conforms to the following Harmonized, International and National Standards:

EMC:	**LVD:**
EN 61326-1:1997	EN 61010-1:1993
EN 50081-1:92	Amendments 1 and 2
EN 50082-1:97	EN 60335-2-24 (applicable sections)
	CSA C22.2 No. 1010.1
	UL 471

Louis E. Urschel, Jr.
V. P. of Quality & Service

Thermo Forma

15 November 2001

Rev. 4

Declaration of Conformity

Manufacturer's Name: Thermo Forma, Inc.

Manufacturer's Address: 401 Millcreek Road
Marietta, Ohio 45750
U.S.A.

Product Description: Laboratory Freezer

Product Designations: **983**

Year of Initial Marking (CE): 1999

Affected Units: **Release Level 11**
Release Level (REL#) shown on Serial Tag

This product conforms to the following European Union Directive(s):

EMC: 89/336/EEC
LVD: 73/23/EEC

This product conforms to the following Harmonized, International and National Standards:

EMC:	**LVD:**
EN 61326-1:1997	EN 61010-1:1993
EN 50081-1:92	Amendments 1 and 2
EN 50082-1:97	EN 60335-2-24 (applicable sections)
	CSA C22.2 No. 1010.1
	UL 471

Louis E. Urschel, Jr.
V. P. of Quality & Service

Thermo Forma

15 November 2001

Rev. 2

Thermo Forma
Millcreek Road, P.O. Box 649
Marietta, Ohio 45750
U.S.A.

Telephone: (740) 373-4763
Telefax: (740) 373-4189