Models: 8416 and 8417
Non-CFC, Biological Storage
Upright Freezers
Manual #7058416

NOTE:

The material in this manual is for information purposes only. The contents and the product it describes are subject to change without notice. Forma Scientific Inc. makes no representations or warranties with respect to this manual. In no event shall Forma Scientific Inc. be held liable for any damages, direct or incidental, arising out of or related to the use of this manual.

IMPORTANT!

READ THIS INSTRUCTION MANUAL.

Failure to read, understand and follow the instructions in this manual may result in damage to the freezer, injury to operating personnel and poor freezer performance.

Caution: All internal adjustments and maintenance must be performed by qualified service personnel.

January 1995
Revised to Non-CFC

GENERAL SAFETY NOTES

~ The Occupational Safety and Health Administration (O.S.H.A.) of the United States has revised Section 1910-147, "The Control of Hazardous Energy (Lockout/Tagout)".

Note: Hazardous energy may be: Electric, Air, Hydraulic, Water, Steam, Gravity, Spring and All Other Equally Hazardous Energy.

This revised regulation, states that you will de-energize all potential sources of energy (may be more than one energy source) prior to performing service or maintenance on any equipment. It also states that a lock shall be placed on the de-energized control, along with a verified test (use of a voltmeter or other equipment) to insure no accidental starts. If you are not familiar with this regulation, review O.S.H.A. Regulation, Section 1910-147.

In field service, full compliance with this regulation is difficult at best. Troubleshooting must often be performed with hazardous energy applied. Therefore, extreme caution must be followed during these troubleshooting steps. ONLY QUALIFIED PERSONNEL MUST PERFORM THIS WORK. This phase of the repair work must be coordinated through the customer's facilities maintenance department or designated safety person.

When performing service or maintenance as an outside contractor/worker, follow the Outside Work Force's Lockout/Tagout system. Be alert for new types of lockout/tagout devices.

~ Always use the correct personnel protective equipment (clothing, gloves, goggles etc.).

~ Always dissipate extreme cold or heat, or wear protective clothing.

~ Always follow good hygiene practices.

~ Each individual is responsible for his/her own safety.

For your safety adhere to ALL "DANGER" and "CAUTION" statements in this manual. Failure to do so could lead to bodily injury, property damage or disciplinary action.

DANGER: **This word is used to call attention to <u>immediate</u> hazards of equipment or conditions which, if not avoided, could result in personal injury, loss of life or property damage.**

CAUTION: **This word is used to call attention to <u>potential</u> hazards of equipment or conditions which, if not avoided, could result in personal injury, loss of life or property damage.**

TABLE OF CONTENTS

SECTION 1 - RECEIVING

1.1 PRELIMINARY INSPECTION

This item was thoroughly inspected and carefully packed prior to shipment and all necessary precautions were taken to ensure safe arrival of the merchandise at its destination. Immediately upon receipt, before the unit is moved from the receiving area, carefully examine the shipment for loss or damage. Unpack the shipment and inspect both interior and exterior for any in-transit damage.

1.2 VISIBLE LOSS OR DAMAGE

If any loss or damage is discovered, note any discrepancies on the delivery receipt. Failure to adequately describe such evidence of loss or damage may result in the carrier refusing to honor a damage claim. Immediately call the delivering carrier and request that their representative perform an inspection. Do not discard any of the packing material and under no circumstances move the shipment from the receiving area.

1.3 CONCEALED LOSS OR DAMAGE

If damage is discovered upon unpacking the shipment, stop further unpacking, retain all packaging material and immediately notify the delivering carrier, requesting that an inspection be performed as soon as possible. Again, under no circumstances move the shipment from the receiving area.

1.4 RESPONSIBILITY FOR SHIPPING DAMAGE

For products shipped F.O.B. Marietta, Ohio, the responsibility of Forma Scientific, Inc. ends when the merchandise is loaded onto the carrier's vehicle.

On F.O.B. Destination shipments, Forma Scientific's and the carrier's responsibility ends when your Receiving Department personnel sign a free and clear delivery receipt.

Whenever possible, Forma Scientific, Inc. will assist in settling claims for loss or in-transit damage.

SECTION 2 - INSTALLATION

2.1 INTRODUCTION

The 8400 series Forma Scientific Ultra-Low Temperature Freezers have front-to-back airflow through the condenser and compressor housing. This front-to-back airflow draws cool room air into the compressor, discharging it at the rear of the unit. By not recirculating warm air from the back of the cabinet, and by not discharging warm air directly into the room, both compressor and laboratory staff work at more comfortable temperatures.

An enlarged condenser and two temperature controlled cooling fans also contribute to better efficiency, even in high ambient conditions.

Maintaining and servicing the air filter and condenser fins is be done from the front of the unit

2.2 UNPACKING LIST

A small bag containing the following accessories is packed inside the freezer:

Qty.	*Stock #*	*Description*	*Purpose*
2	***20065***	***1/4-20 x 5 1/2" Bolt***	***Wall Bumper***
2	***380520***	***Neoprene Cap***	***Cap Protector***

2.3 INSTALLING THE WALL BUMPERS

The parts bag contains two (2) 1/4-20 x 5 1/2" bumper bolts and two (2) neoprene caps. Install the bolts (the holes are pre-tapped) on the back side of the compressor section. Install a neoprene cap on each bolt.

Caution: If the bumpers are removed, they must be reinstalled before the freezer is placed in the desired location to insure adequate ventilation and air flow for the compressor.

2.4 LOCATION

Locate the freezer on a firm, level surface in an area of minimum ambient temperature fluctuation.

Note: The unit will fit through a standard 34" door opening.

Caution: To allow for proper ventilation and air flow, a minimum of 5" of clear space is required behind the freezer. An additional 5" (minimum) of clear space is also required either above or on one side of the freezer. When locating the back of the freezer toward a wall or obstacle(s), make sure that the wall bumpers are installed.

2.5 CONNECTING POWER TO THE FREEZER

Caution: Forma Scientific, Inc. recommends that the freezer be operated on a dedicated electrical circuit to avoid the possibility of a circuit overload and to ensure product safety.

Before connecting the freezer to an adequate power source, refer to the electrical data plate mounted on the back of the unit or the electrical specifications listed in Section 8.

2.6 DEACTIVATING THE ENVIRO-SCAN MONITOR FOR STORAGE

The Enviro-Scan Monitor has been deactivated (placed in a sleep mode), prior to shipment. The monitor will be re-activated once power is applied to the freezer. If electrical power is lost or the freezer is disconnected, the monitor will be sustained by battery back-up.

Caution: Whenever the freezer is disconnected from the main power source for storage, the "Enviro-Scan" must be de-activated, in order to preserve battery life and prevent invalidation of warranty.

1. Turn off the main power source.

2. Obtain the access code prompt by depressing the UP ARROW key and the BATTERY % CHARGE key simultaneously. A "1" must appear in the display window. If a "1" does not appear in the window, repeat step 2.

3. Enter the four digit access code. (Access code from factory = 1,2,3,4) For access code information, refer to Section 3.2 and Section 4.1. To change the access code refer to Section 5.3.

4. After entering the four digit access code, depress the ENTER key and "CAL" will appear in the window.

5. Depress the DOWN ARROW key.

The Enviro-Scan monitor should now be deactivated (placed in a sleep mode) until the power switch is turned "ON".

2.8 RS-232 OUTPUT INTERFACE

The 8400 series freezers are equipped with an RS 232 Serial Communication Interface for the remote transmission of sensor data. A standard DB-25S connector is located on the rear of the compressor housing. The data is "dumb printer" formatted, which permits interfacing with either a computer or a serial printer.

Three wires are used for the RS-232 interface:

1) TX Data = Pin 2
2) RX Data = Pin 3
3) Signal Ground = Pin 7

The data format is seven-bit ASCII with a leading zero (8th bit). Each character is transmitted with one start-bit, eight data-bits, and two stop-bits, totaling eleven bits. NO parity-bit is included. Baud rate is 1200.

A data transfer sequence is transmitted according to the following format. X refers to the variable numerical temperature data.

(NUL) (-) XXX (SP) C (SP) (OVERTEMP) (SP) (LF) (CR) (EOT) (SP) (UNDER TEMP)

The words "OVERTEMP" or "UNDER TEMP" are transmitted with the temperature if one of those conditions exists at the time the data is transmitted. When there is no alarm condition, spaces will be sent instead so that there is always a total of 20 characters sent.

SP - space
LF - line feed
CR - carriage return
EOT - end of text
NUL - null character (00)

The Enviro-Scan Monitor transmits temperature and alarm condition data when power is first applied to the Monitor and every 60 minutes afterward.

The Enviro-Scan Monitor responds to two ASCII commands from the remote: DC1 (XON), and DC3 (XOFF).

DC1 (11H): The Enviro-Scan Monitor will transmit temperature and alarm condition data upon receipt of DC1 and resume 60 minute interval transmissions if they had been inhibited by a DC3.

DC3 (13H): Receiving a DC3 from the remote inhibits the Enviro-Scan Monitor from sending serial data indefinitely until a DC1 is received or Monitor power is removed and then reapplied.

SECTION 3 - ENVIRO-SCAN MONITOR OPERATION

3.1 OVERVIEW DRAWING OF THE ENVIRO-SCAN MONITOR

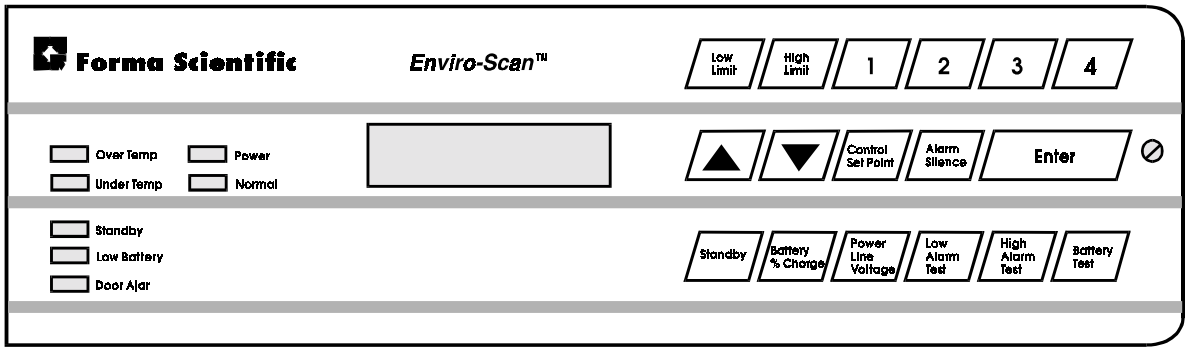

Figure 3-1
Enviro-Scan Monitor

3.2 ENVIRO-SCAN MONITOR DESCRIPTION

The Enviro-Scan Monitor provides constant monitoring of the freezer's operation. The numerical LCD display provides a readout of the actual freezer chamber temperature in increments of one degree Celsius.

The Enviro-Scan Monitor has some functions requiring the entry of a four digit code in order to access, display, and change them. The code 1,2,3,4 is pre-programmed into each Enviro-Scan Monitor at the factory. This code may be user changed to any four digit combination of the numbers 1,2,3, and 4. (See Section 5.3 for access code changing procedures.)

Functions requiring no access code are: Alarm Silence, Enter, Standby, Battery Charge, Power Line Voltage, Low Alarm Test, High Alarm Test, and Battery Test. Other features include Over Temp light, Under temp light, Standby light, Low Battery light, Door Ajar light, Power light, Normal light and a (hidden) Check Condenser light.

3.3 MAIN POWER SWITCH

The main power switch is located on the back of the refrigeration unit, directly above the line cord.

Note: OFF = (o) ON= (|).

3.4 DESCRIPTION OF KEY FUNCTIONS (No Access Code Required)
Refer to Figure 3-1

Battery % Charge Displays the Enviro-Scan Monitor backup battery's percent of charge. The reading gives some indication of how long the monitor will operate on battery backup. The Backup system is designed to maintain monitor operation for at least 72 hours. A reading of 50%, when on battery power, indicates that the monitor will run for approximately 36 hours.

Alarm Silence Silences all alarms for approximately 30 minutes and sets the display mode to cabinet temperature.

Enter Displays cabinet temperature.

Note: This key must also be used for functions requiring the access code.

Power Line Voltage Displays the line voltage. A zero will be displayed on the LCD when the line voltage reading drops below 100 volts on a 208/220 volt circuit (50 volts on a 115 volt circuit).

Standby The STANDBY mode silences the audible alarm after an alarm condition or a power failure. The STANDBY key will silence the *audible* alarm only. The alarm light will stay on until the alarm condition has been corrected. A built-in ring-back feature audibly signals that the unit has returned to normal set point limits. Depress the STANDBY key to remove the audible tone.

Low Alarm Test The alarm limit must be set to within 45°C of actual cabinet temperature to perform this test. If the alarm limit is not set within this limit, a long tone will sound and no test will occur. If within limits, the alarm will be activated when the probe temperature drops below the low alarm limit. The test may be aborted at any time by pressing ENTER. All other key functions are "locked-out" during this test.

High Alarm Test The alarm limit must be set to within 45°C of actual cabinet temperature to perform this test. If the alarm limit is not set within this limit, a long tone will sound and no test will occur. If within limits, the probe will be heated until it reaches the alarm limit and the alarm will be activated. The probe will then gradually cool back to the actual cabinet temperature. The test may be aborted at any time by pressing ENTER. All other key functions are "locked-out" during this test.

Battery Test Disconnects the main power from the monitor, making it switch and operate on battery power.

ACCESS KEYS:

Keys 1,2,3 and 4 will be used for the entry of the four digit access code.

3.5 DESCRIPTION OF KEY FUNCTIONS (Access Code Required)
Refer to Figure 3-1

σ Pressing the UP arrow key will increase the display by increments of one division. If this key is held down for more than two seconds the display will increment automatically.

Note: The UP and DOWN arrow keys are used for setting the HIGH and LOW limits and all calibration functions.

τ Pressing the DOWN arrow key will decrease the display by increments of one division. If this key is held down for more than two seconds the display will increment automatically.

The LOW LIMIT key is used to establish a Low Limit set point. When the chamber temperature reaches (or exceeds) the Low Limit set point, the audible alarm will sound and the UNDER TEMP indicating light will come on. The remote alarm contacts, located on the back of freezer, will also be activated. Refer to Section 4.2 for Low Limit setting instructions.

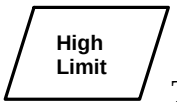

The HIGH LIMIT key is used to establish a High Limit set point. When the chamber temperature reaches, or exceeds, the High Limit set point, the audible alarm will sound and the OVER TEMP indicating light will come on. The remote alarm contacts, located on the back of the freezer, will also be activated. Refer to Section 4.2 for High Limit setting instructions.

After depressing this key and entering the access code, the setting for the temperature control will appear in the display. The control setting is adjusted by turning the potentiometer located on the far right end of the monitor panel.

Note: When in a battery backup condition (AC power off), the control set point value will be replaced with "--" to prevent false data from being displayed. Press ENTER to return to the temperature display.


Set Point Adjustment Screw located to the right of the ENTER key is used to set the operating temperature of the freezer. An adjustment screwdriver is located under the bottom portion of the freezer base. (See Figure 3-2).

3.6 AUDIBLE ALARM AND CONTROL PANEL INDICATORS

Audible Alarm: Provides a pulsing tone whenever an alarm condition is present. The door ajar audible alarm has a 30 second delay to prevent nuisance alarms when the door or lid is opened. Pressing the ALARM SILENCE key will silence all alarms for 30 minutes.

Note: When in STANDBY mode, the audible alarm is silent until all alarm conditions are cleared. Audible alarm conditions include OVER TEMP, UNDER TEMP, DOOR AJAR and AC power failure.

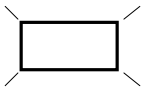

OVER TEMP (LED): Flashes when an over temp condition exists.

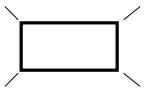

UNDER TEMP (LED): Flashes when an under temp condition exists.

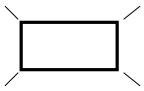

STANDBY (LED): Lights when in standby mode.

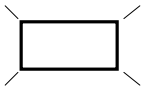

LOW BATTERY (LED): On when battery state of charge is below 50% and AC power is on. When AC power is off the LOW BATTERY LED comes on when the battery state of charge is below 15%.

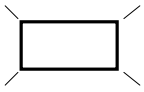

DOOR AJAR (LED): Flashes when freezer door/lid is open.

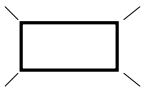

POWER (LED): Lights when AC power is on. Off when AC power is off.

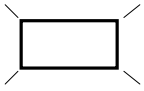

NORMAL (LED): Lights when no temperature alarms exist. Goes off when a temperature alarm occurs.

The words CHECK CONDENSER will appear in the alpha-numeric display and a audible alarm will sound for 12 seconds every 15 minutes when the thermostat on the condenser reaches 40° C. This condition typically indicates a clogged condenser or fan failure. The audible alarm can be silenced only by correcting the problem causing the alarm condition.

Caution: The user should immediately check the air filter (Figure 3-2) and the condenser for cleanliness and the fan for proper operation. Failure to do so may cause compressor damage and result in loss of product inside freezer. Refer to Section 6.1, "Cleaning the Condenser" and Section 6.2, "Cleaning the Air Filter".

3.7 SET POINT ADJUSTMENT TOOL

A small screwdriver, located on the bottom left side of the front panel, has been provided for setting the temperature Set Point. To remove the screwdriver from its holder, pull down on the black knob near the left front caster on the freezer frame. Refer to Figure 3-2 for the location of the screwdriver.

3.8 AUTOMATIC VOLTAGE COMPENSATION SYSTEM

The Forma Biological Storage Freezer is equipped with an automatic line voltage compensation system located in the refrigeration compartment. The system monitors in-coming electrical power and automatically adjusts the voltage directed to the freezer power supply. This compensation system ensures that the compressor operates within specification and provides an additional margin of product protection.

A green LED indicating light, labeled "Voltage Compensation", indicates when the system is in operation. The light is located on the front of the compressor section, lower left corner of the freezer cabinet. (See Figure 3-2)

Electrical voltage cut-in/cut-out points are listed below.

	BOOST		BUCK	
Voltage Supply	Cut-In	Cut-Out	Cut-In	Cut-Out
110V	105V	110V	120V	115V
220V	210V	220V	240V	230V

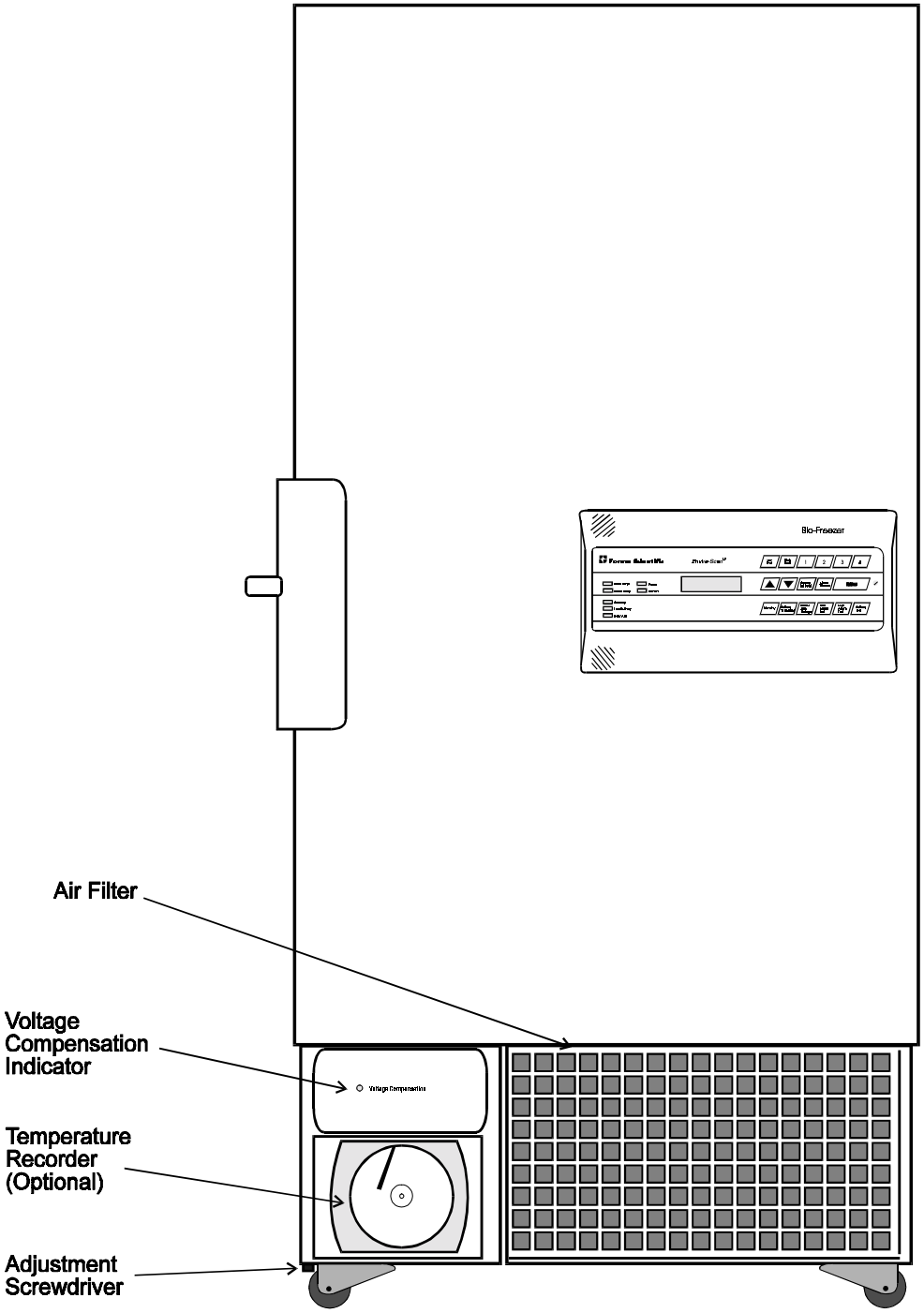

Figure 3-2
8400 Series Freezers
Front View

3.9 OPERATOR'S QUICK REFERENCE GUIDE

SECTION 4 - INITIAL START UP PROCEDURE

4.1 INITIAL START-UP

At start-up, cabinet temperature is set in two "pull-down" temperature settings. The temperature set point is set to -20° C, and the unit allowed to operate at that temperature for 12 hours. The cabinet is then set to the desired operating temperature.

1. After reading and completing sections 1 through 3 and Section 4.5 (if unit has optional Weksler recorder), turn the main power switch to the ON position "(|)".

Note: Actual cabinet temperature will be displayed in the LCD window.

2. Depress the CONTROL set point key and a "1" will appear in the LCD window.

3. Enter access code (1,2,3,4).

Note: A "1" will still appear in the LCD window.

4. Depress the ENTER key and the word "SET", along with the control set point temperature will be displayed in the LCD window.

5. With the set point adjustment screwdriver, located on the bottom left side of the freezer base (Refer to Figure 3-2). Adjust the set point screw counterclockwise to a temperature set point of -20° C. The Set Point screw is located to the right of the ENTER key on the Enviro-Scan Monitor.

Note: Please allow the freezer to operate at this temperature for a 12 hour period.

6. Depress the ENTER key and the LCD display will return to the actual cabinet temperature.

7. After the 12 hour start-up period, re-adjust the cabinet temperature to the desired operating temperature.

4.2 SETTING THE LOW AND HIGH LIMIT SET POINTS

NOTE: The High Limit set point has been factory-set at -65° C, and the Low Limit set point has been factory-set at 3 degrees below operating temperature.

If temperature limit set points other than those established at the factory are desired, they can be adjusted as follows:

To display or change the low limit set point:

1. Depress the LOW LIMIT key and a "1" will appear in the LCD window.

2. Enter access code (1,2,3,4). NOTE: A "1" will still appear in the LCD window.

3. Depress the ENTER key and the existing Low Limit along with the word "SET LOW LIMIT" will be displayed in the LCD window.

4. Change the existing Low Limit by depressing either the UP or DOWN arrow keys.

5. Depress the ENTER key and the LCD display will return to cabinet temperature.

To display or change the high limit set point:

1. Depress the HIGH LIMIT key and a "1" will appear in the LCD window.

2. Enter access code (1,2,3,4).

Note: A "1" will still appear in the LCD window.

3. Depress the ENTER key and the existing High Limit along with the word "SET HIGH LIMIT" will be displayed in the LCD window.

4. Change the existing HIGH LIMIT by depressing either the UP or DOWN arrow keys.

5. Depress the ENTER key and the LCD display will return to cabinet temperature.

4.3 GENERAL RECOMMENDATIONS

The refrigeration system is designed to maintain ultra-low temperatures with safety in a 90° F ambient environment *only* when the freezer is used for storage.

Caution: The unit is not a "quick-freeze" device. Freezing large quantities of liquid, or high-water content items, will temporarily increase the temperature and will cause the low stage compressor to operate for a prolonged time period. Damage to the compressor may result and product safety may be jeopardized.

Avoid opening the door for extended time periods. Room air, which is higher in humidity, will replace chamber air and cause frost to develop.

Caution: Allowing the door to remain open for extended time periods will cause the chamber to "warm-up", putting undue stress on the compressors. "Oil-logging" of the compressors may result.

4.4 INITIAL LOADING

Before loading, follow instructions for initial start-up and pull-down as outlined in Section 4.1.

When loading the unit with "pre-frozen" materials, the temperature controller should be set no lower than the temperature of the "pre-frozen" material. Allow the unit to cycle at the set point for eight hours. The set point may then be lowered in increments of 10° C, with a stabilizing time of eight hours on each 10 degree setting, until the desired set point or the low-end temperature set point is reached.

Caution: Failure to follow the above procedure, or overloading the unit will cause undue stress on the compressors. "Oil-logging" of the compressors will result. The unit will "warm-up" and product may be lost.

Any questions concerning this procedure should be directed to Forma Service at 1-800-848-3080 in the USA, or outside the USA, to your local Sales Representative.

4.5 OPERATION OF THE WEKSLER TEMPERATURE RECORDER (OPTIONAL)

Prior to connecting the freezer to the power source, install a chart on the temperature recorder, and remove the protective cap from the pen. Make sure the pen is inking properly by manually rotating the chart.

For additional information on the temperature recorder, see the Weksler supplement included with this manual.

Note: The felt-tip pen on the Weksler recorder requires periodic replacement. Usually the pen will ink more faintly for about one to three weeks before replacement becomes necessary. Additional pen tips can be purchased through Forma Scientific, Inc.

SECTION 5 - CALIBRATION

5.1 CALIBRATION DESCRIPTION

The calibration of the measured parameters is done from the monitor keypad. Access to the calibration mode requires entry of the four digit access code. To obtain the access code prompt, *simultaneously* press the UP ARROW key and the BATTERY %CHARGE key.

Note: The keys must be pressed firmly and at the same time.

Once this has been done correctly a "1" will appear in the display window. After keying in the access code, press ENTER and "CAL" will appear in the display. At this point, the parameter to be calibrated may be selected by pressing its associated display function key.

Note: When changing calibration values, pressing the UP or DOWN arrow keys for more than two seconds will cause the displayed value to increment automatically.

5.2 CALIBRATION THE TEMPERATURE (MONITOR PROBE) AND CONTROL SET POINT (CONTROL PROBE)

The Enviro-Scan Temperature Monitor has been factory calibrated.

Caution: Calibration must be performed by qualified personnel.

Note: All 8400 series freezers must be calibrated when the freezer is at low end operating temperature (example: -75°C, -85/-86°C). Attempting calibration at ambient temperature will create a drastic error in probe alignment.

Tool needed: Accurate temperature measuring device.

1. Allow freezer temperature to remain stable at temperature set point.
2. Open freezer door (fully open).
3. Open the bottom two inner doors.
4. Place a temperature measuring device (of known accuracy) beside the Probe Cover.
5. Allow freezer temperature to remain stable after door/lid opening.
6. Obtain access code prompt by pressing the up arrow key and the "Battery %CHARGE" key *simultaneously*.

NOTE: A "1" must appear in the display window before you proceed to the next step. If a "1" does not appear in the window, repeat Step #1.

7. Enter the four digit access code.

8. Press ENTER and "CAL" will appear in the display.

9. Press ENTER key again and (monitor) cabinet temperature will be displayed.

10. Compare the (monitor) reading with the accurate measuring device.

11. If the two temperature readings do not agree, match them accordingly by using the UP or DOWN arrow keys.

12. Press ENTER to return to the normal temperature display mode.

13. Obtain access code prompt by depressing the up arrow key and the BATTERY %CHARGE key *simultaneously*.

NOTE: A "1" must appear in the display window before you proceed to the next step. If a "1" does not appear in the window, repeat Step #1.

14. Enter the four digit access code.

15. Press ENTER and "CAL" will appear in the display.

16. Press the CONTROL set point key to display the measured cabinet temperature from the control probe.

17. Compare the (control probe) reading with the accurate measuring device.

18. If the two temperature readings do not agree, match them accordingly by using the UP or DOWN arrow keys.

19. Press ENTER to return to the normal temperature display mode.

5.3 CHANGING THE ACCESS CODE

1. Obtain access code prompt by depressing the up arrow key and the BATTERY %CHARGE key *simultaneously*. A "1" will appear in the display window.

Note: The keys must be pressed firmly and at the same time. If a "1" does not appear in the window, repeat step 1.

2. Enter the *current* four digit access code.

3. Press ENTER. "CAL" will appear in the display.

4. Depress the (4) key and a "1" will appear in the display prompting the *new* access code entry.

5. Key in the *new* four digit code using any combination of the numbers 1, 2, 3 and 4. The monitor will accept the last four digits if more than four are entered. If less than four digits are entered, the display returns to temperature and does not change the access code.

6. Depress ENTER to change to the new code and return to the temperature display.

SECTION 6 - ROUTINE MAINTENANCE

6.1 CLEANING THE CONDENSER

Caution: De-energize all potential sources of energy to unit. lockout/tagout de-energized control per O.S.H.A. Regulation, Section 1910-147 before cleaning the refrigeration system.

Caution: The check condenser light comes "on" when the thermostat in the refrigeration compartment reaches 40° C, which indicates typically a clogged air filter, a clogged condenser or fan failure.

The efficiency of the refrigeration unit is directly related to the cleanness of the air-cooled condenser. Dust in the condenser fins slows the rate of heat dissipation and increases compressor operating temperature (thereby decreasing effective compressor life). A dirty condenser will reduce the overall performance of the refrigeration system in terms of recovery time and set point control accuracy **or may ultimately cause compressor failure.**

The air-cooled condenser (the finned surface located in the center area of the refrigeration compartment) should be cleaned, as often as necessary, to ensure efficient compressor operation. Forma Scientific, Inc. recommends a minimum of twice a year, depending upon laboratory cleanliness.

To clean the condenser, remove the grill by grasping the assembly at the corners and gently pulling it away from the frame. Clean the compressor housings, the condenser fins and other refrigeration system parts with a vacuum or air-hose.

Note: Before replacing the grill, inspect filter for cleanliness and clean or replace if necessary. Refer to Section 6.2.

Compressors and fan motors are permanently lubricated and do not require regular servicing.

After cleaning the refrigeration system, remove lockout/tagout devices and re-energize system per O.S.H.A. regulation, Section 1910-147.

6.2 CLEANING THE AIR FILTER (Refer to Figure 6-1)

A foam type air cleaner is located at the front of the freezer base. Routinely check the filter for cleanliness. When the filter appears dirty it can be easily removed for cleaning. The filter and grill assembly are held in place by snap fasteners on each corner of the grill.

1. Remove the grill by grasping the assembly at the corners and gently pulling it away from the frame. Remove the filter.

2. Clean the filter by washing it with a mild detergent and dry by pressing it between two towels.

3. Should the filter become torn or excessively dirty, a replacement may be order from Forma Scientific, Inc.

6.3 DEFROSTING THE CHAMBER

The type of frost formed in the chamber is generally very soft and may be easily removed with a *soft* cloth. *Do not* use any type of abrasive brushes. A complete defrosting may occasionally be required. To completely defrost the chamber:

1. Remove the product and place it in another freezer.
2. Disconnect the freezer from the power supply.
3. Open all doors.
4. Place towels on chamber floor.
5. Allow frost to melt and become loose from interior chamber.
6. Remove frost with a *soft* cloth.
7. After defrosting is complete, wipe interior chamber dry with a clean *soft* cloth.

6.4 CLEANING THE DOOR GASKET

Routinely (monthly) check the door gasket for any perforations that will cause air leaks. Frost will form around all leakage areas. Frost accumulation on the door gasket may be removed with a *dry soft cloth*.

6.5 CLEANING THE VACUUM RELIEF PORT (Refer to Figure 6-1)

The vacuum relief port on the Model 8400 Series is located in the lower left front of the chamber interior. Routinely check the vacuum relief port for frost accumulation and clean as necessary, using a *soft* cloth.

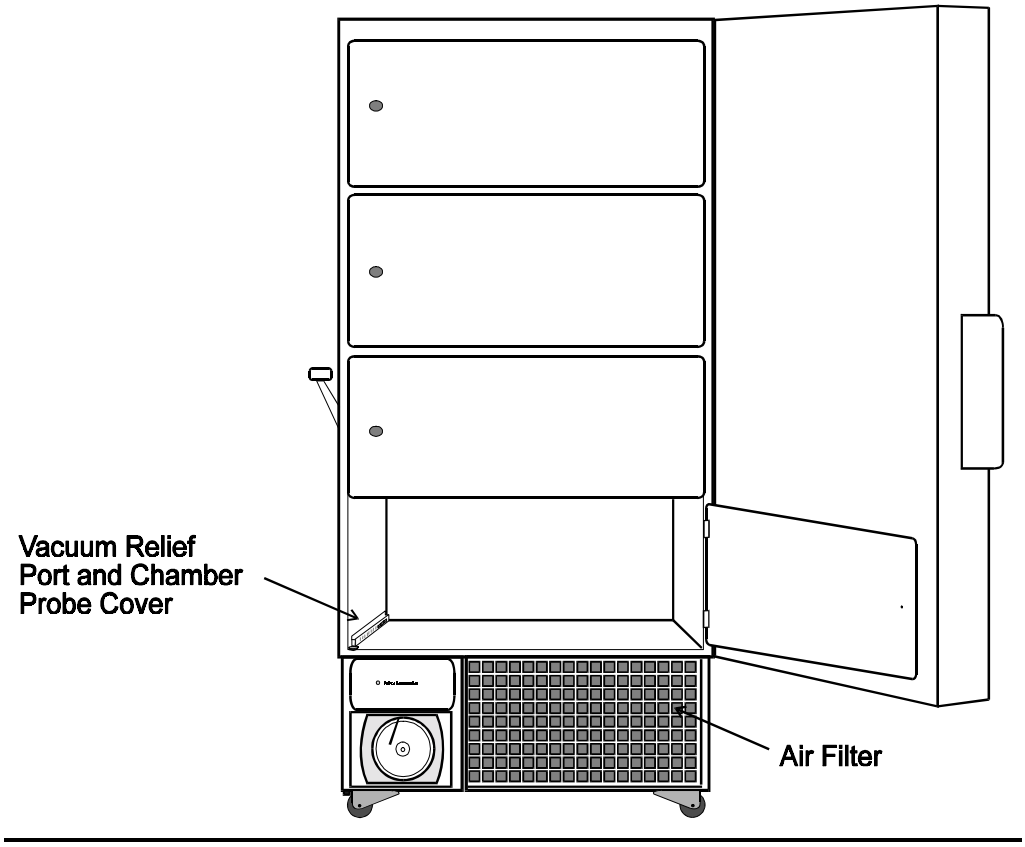

Figure 6-1
Vacuum Relief Port, Temperature Probe and Air Filter Location

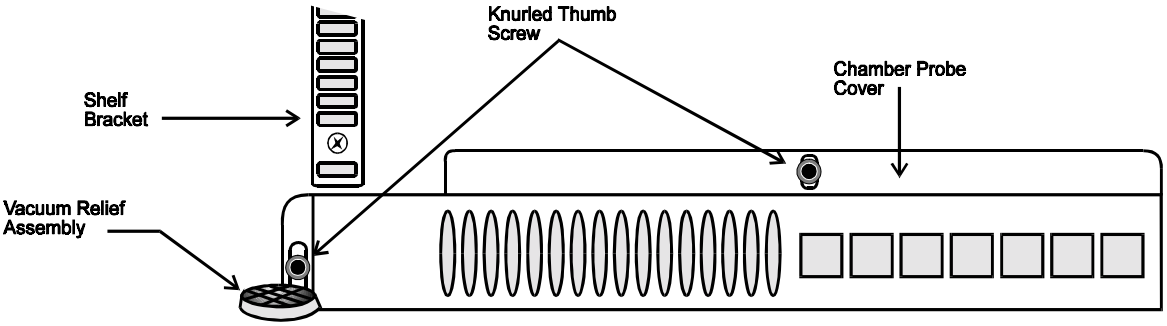

Figure 6-2
Vacuum Relief and Probe Cover Assemblies

SECTION 7 - SERVICE

7.1 SERVICING THE REFRIGERATION SYSTEM

Caution: Servicing must be performed by qualified service personnel only.

In the event of a unit malfunction, check all electrical components including starting relays, thermal protectors, and starting capacitors on the compressors *before* examining the refrigeration system.

Electrical schematics and drawings with parts for the refrigeration system are included with this manual.

Caution: Repair work should be performed only by personnel who have had prior experience with cascade refrigeration systems.

Note: A service manual entitled "ULTRA-LOW REFRIGERATION SYSTEM SERVICE GUIDE" is available from Forma Scientific, Inc. Call or write for details.

7.2 TROUBLESHOOTING GUIDE

The following chart is intended as guide to troubleshooting the system, should a problem occur. Actual servicing of the freezer must be performed by qualified service personnel only.

Symptom **Possible Cause**	
No Power Light on Monitor.	• Power line cord disconnected. • Circuit breaker tripped/open. • Main power switch OFF. • Pin-connector not plugged into "Enviro-Scan" monitor board. • Fuse open on Temp Control board.
Chamber Temp Deviates from Set Point.	• Too much warm product added. • Door/lid opened too long. • Insufficient voltage. • Inadequate air circulation. • Calibration. • Dirty condenser
Too Much Frost Build-Up.	• Fan blades loose or bent. • Tubing in contact with compressor. • Loose fan bracket.
Freezer not Being Refrigerated (Unit is receiving Power).	• Low stage Compressor thermal overload open. • Defective low stage control. • Defective temp control. • Defective high pressure cut-off. • Low stage compressor locked up.
Display Problems in General.	• Defective monitor board.

SECTION 8 - SPECIFICATIONS FOR UPRIGHT 17.3 CU. FT., MODEL 8416 AND 8417 FREEZERS

Specification	**Models 8416 and 8417**
Electrical	208-230VAC, 1PH , 60 Hz, 12 FLA or 200-240VAC, 1 PH, 50 Hz, 12 FLA
Breaker Requirements (Dedicated Circuit)	**8416:** 20 Amp, 120 VAC **8417:** 15 Amp, 220 VAC
Construction	**Exterior:** Cold Rolled Steel **Interior Chamber:** Stainless Steel
Insulation	**Type:** CFC-free foamed-in-place urethane **Sides:** 5" (12.7cm) **Door:** 4.5" (11.3 cm)
Exterior Dimensions	33.25" W x 78.75" H x 37" F-B (85 cm x 200.7 cm x 94 cm) Add 3" (7.6cm) to width for handle/hinge Add 7" (17.8cm) to F-B for control panel/wall spacer
Interior Dimensions	Interior: 23" W x 51.5" H x 25.25" F-B (58 cm x 131 cm x 64 cm)
Capacity	17.3 Cu. Ft. (490 liters)
Shipping Weight (nominal)	**Ocean:** 1000 lbs. (454 kg) **Air/Container:** 900 lbs. (408 kg) **Motor:** 758 lbs. (344 kg)
Refrigeration Type	Two, 1/2 HP Compressors (Cascade System)
Temperature	-50° C (-58°F) to -86° C (-123°F)

SECTION 9 - PARTS LIST

MODEL 8416 (Non-CFC)

STOCK #	*DESCRIPTION*
190269	Temperature Control Board
290041	1000 OHM Platinum Probe
189158	Pot Assembly for Enviro-Scan Monitor
400101	Thermostat 40C
400863	Monitor Board (Wired)
400064	Battery 6V, 8AH (Rechargeable)
214006	Oil Separator
900088	Tubeaxial Fan, 560 CFM, 220V
990009	Compressor 115V, 1/2 HP
209006	Dryer 3/8 ODF
760162	Air Filter, 21-3/8" x 13-3/8" x 1/2"

MODEL 8417 (Non-CFC)

STOCK #	*DESCRIPTION*
190269	Temperature Control Board
290041	1000 OHM Platinum Probe
189158	Pot Assembly for Enviro-Scan Monitor
400101	Thermostat 40C
400863	Monitor Board (Wired)
400064	Battery 6V, 8AH (Rechargeable)
214006	Oil Separator
900088	Tubeaxial Fan, 560 CFM, 220V
990004	Compressor 230V, 1/2 HP
209006	Dryer 1/4 ODF (Non-CFC)
760162	Air Filter, 21-3/8" x 13-3/8" x 1/2"

SECTION 10 - REFRIGERATION DRAWINGS

Table of Contents

CASCADE REFRIGERATION

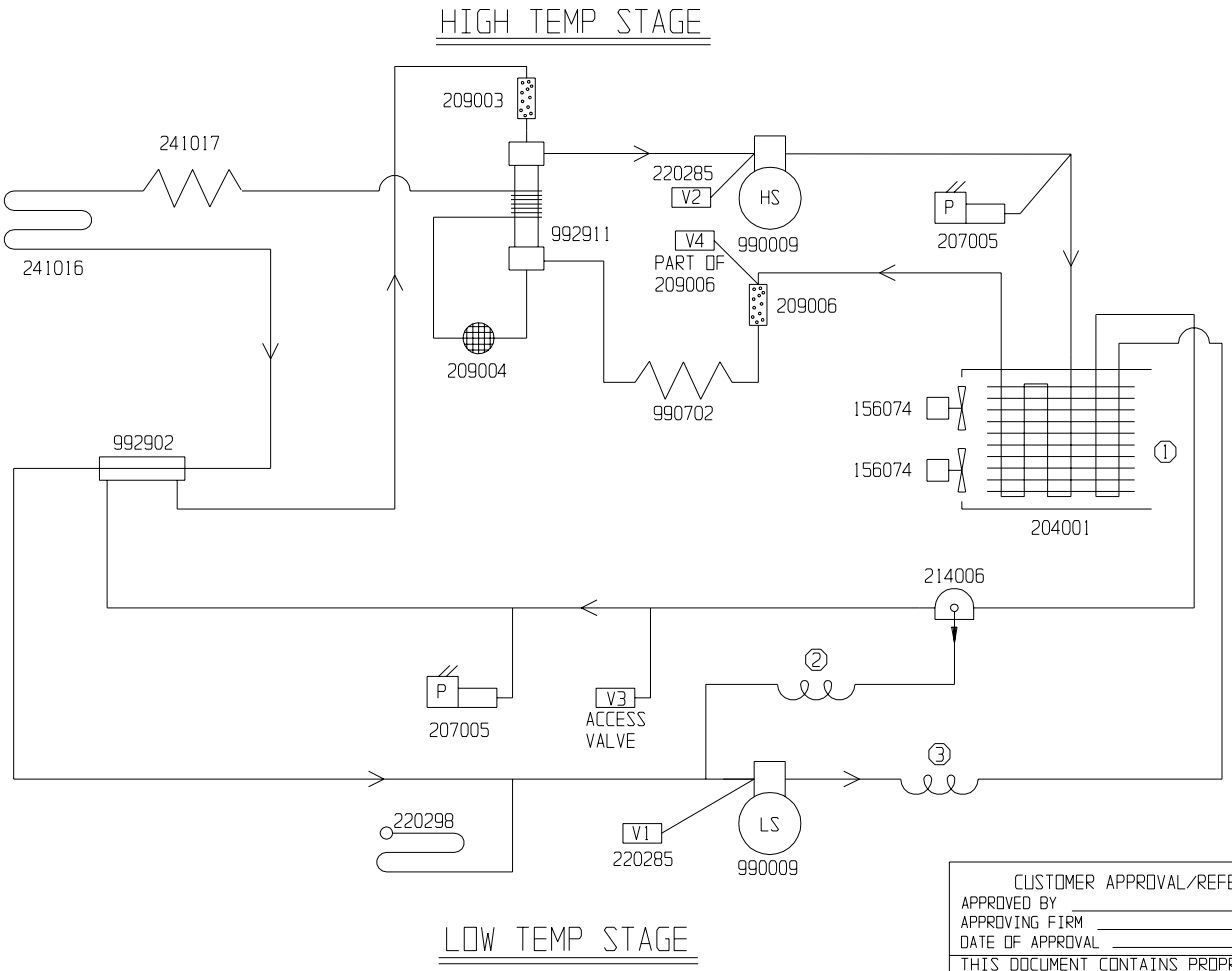

HIGH TEMPERATURE STAGE:
REFRIGERANT 12: 23 OZ
ZEROL 150T: COMPRESSOR 40 OZ

LOW TEMPERATURE STAGE:
*REFRIGERANT 290: 1.1 OZ 30" VAC. - 15 PSIG
*REFRIGERANT 503: 7.5 OZ 15 PSIG - 115 PSIG
ZEROL 150T: (COMPRESSOR) 40 OZ
(OIL SEPARATOR) 15 OZ
DESUPER HEAT COIL: 1 TOP FOUR PASSES OF R-12
AIR-COOLED CONDENSER
VIB. ISO. COIL 2 1 COIL 1/4" TUBING X 4" DIA.
DESUPER HEAT/VIB. ISO. COIL 3 2 COILS 5/16" TUBING X 6-3/4" DIA.

*WHEN SYSTEM IS AT 24°C

CUSTOMER APPROVAL/REFERENCE
APPROVED BY _____
APPROVING FIRM _____
DATE OF APPROVAL _____

REV	ECR NO.	DATE	BY	CAD	APPD	DESCRIPTION OF REVISION
12	SI-3935	7-26-93	LDC	LDC		209006 WAS 991001
11	FR-465	5-10-93	LDC	LDC	JV	FRONT TO BACK AIR FLOW
10	SI-3762	4-26-93	JHV	KDG	LDN	CHG. OIL SEPERATOR TO 214006
9	FR-418	1-20-92	JV	LDC	LDN	COND.,PRESS.SW.,REDRAW
8	FR-400	10-25-91	AT	AT	LDN	207004 WAS 207003

Forma Scientific
BOX 649 MARIETTA, OHIO 45750 TELEX 24-5394
TOLL FREE USA 800-848-3080, OHIO 614-373-4763

DATE 11-11-87	DWN RTT	CAD LDC	APPD JV	SCALE NONE
CUSTOMER			
JOB TITLE 8416 & 816 -86°C 17 CU FT UPRIGHT FREEZER			
DWG TITLE REFRIGERATION SCHEMATIC			
LOCATION	JOB NUMBER	DRAWING NUMBER 8416-90-0-B	

CASCADE REFRIGERATION

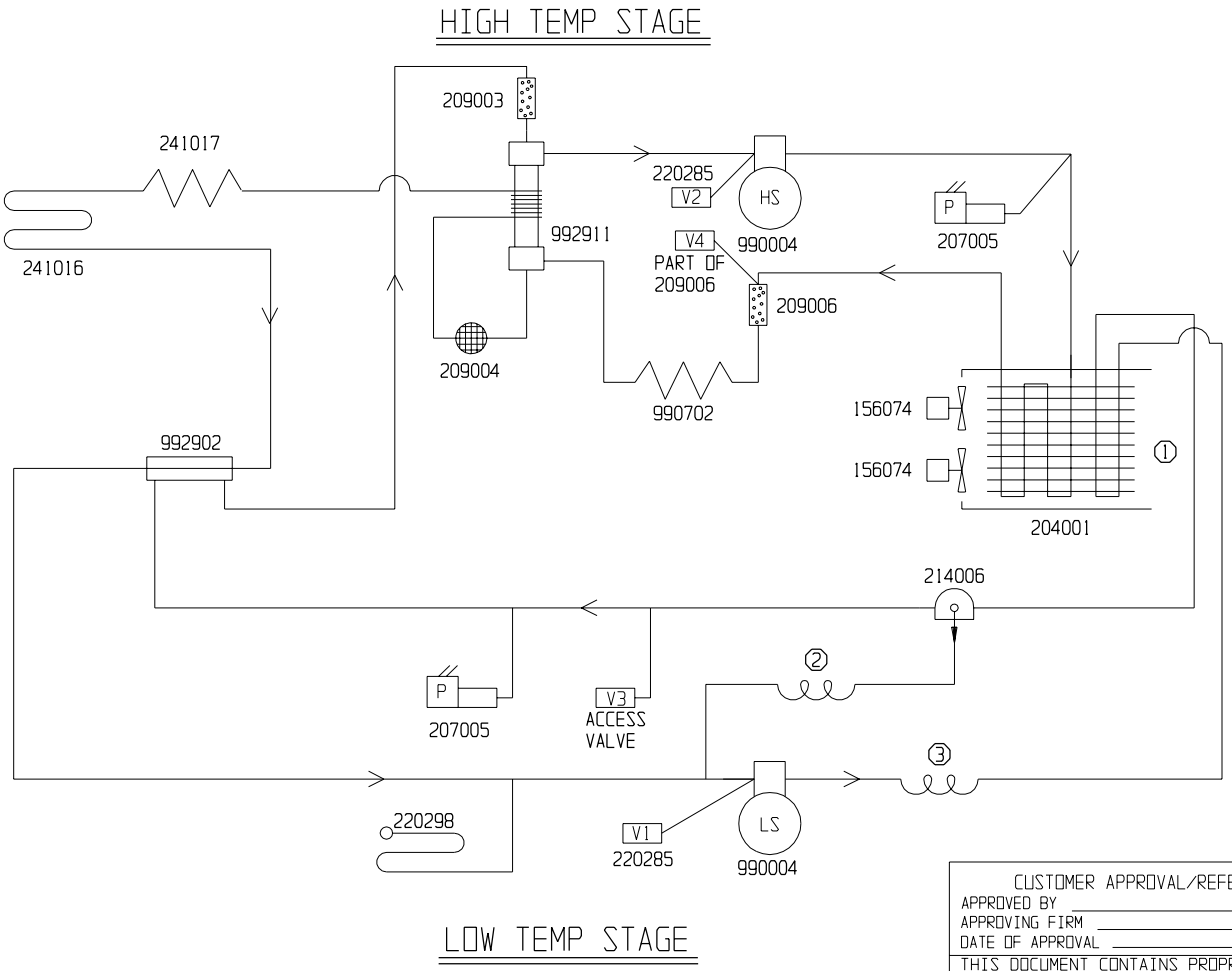

HIGH TEMPERATURE STAGE:
REFRIGERANT 12: 23 OZ
ZEROL 150T: COMPRESSOR 40 OZ

LOW TEMPERATURE STAGE:
*REFRIGERANT 290: 1.1 OZ 30" VAC. - 15 PSIG
*REFRIGERANT 503: 7.5 OZ 15 PSIG - 115 PSIG
ZEROL 150T: (COMPRESSOR) 40 OZ
(OIL SEPARATOR) 15 OZ
DESUPER HEAT COIL: 1 TOP FOUR PASSES OF R-12
AIR-COOLED CONDENSER
VIB. ISO. COIL 2 1 COIL 1/4" TUBING X 4" DIA.
DESUPER HEAT/VIB. ISO. COIL 3 2 COILS 5/16" TUBING X 6-3/4" DIA.

*WHEN SYSTEM IS AT 24°C

CUSTOMER APPROVAL/REFERENCE
APPROVED BY _____
APPROVING FIRM _____
DATE OF APPROVAL _____

REV	ECR NO.	DATE	BY	CAD	APPD	DESCRIPTION OF REVISION
12	SI-3935	7-26-93	LDC	LDC		209006 WAS 991001
11	FR-465	5-13-93	LDC	GJG	JV	FRONT TO BACK AIR FLOW
10	SI-3762	4-26-93	JHV	KDG	LDN	CHG. OIL SEPERATOR TO 214006
9	FR-418	1-20-92	JV	LDC	LDN	COND.,PRESS.SW.,REDRAW
8	FR-400	10-25-91	AT	AT	LDN	207004 WAS 207003

Forma Scientific
BOX 649 MARIETTA, OHIO 45750 TELEX 24-5394
TOLL FREE USA 800-848-3080, OHIO 614-373-4763

DATE 11-11-87	DWN RTT	CAD LDC	APPD JV	SCALE NONE
CUSTOMER			
JOB TITLE 8417 & 817 -86°C 17 CU FT UPRIGHT FREEZER			
DWG TITLE REFRIGERATION SCHEMATIC			
LOCATION	JOB NUMBER	DRAWING NUMBER 8417-90-0-B	

SECTION 11 - ELECTRICAL SCHEMATICS

Table of Contents

POWER CONNECTION
120V, 1Ø, 2W, 60HZ, 15.5 FLA

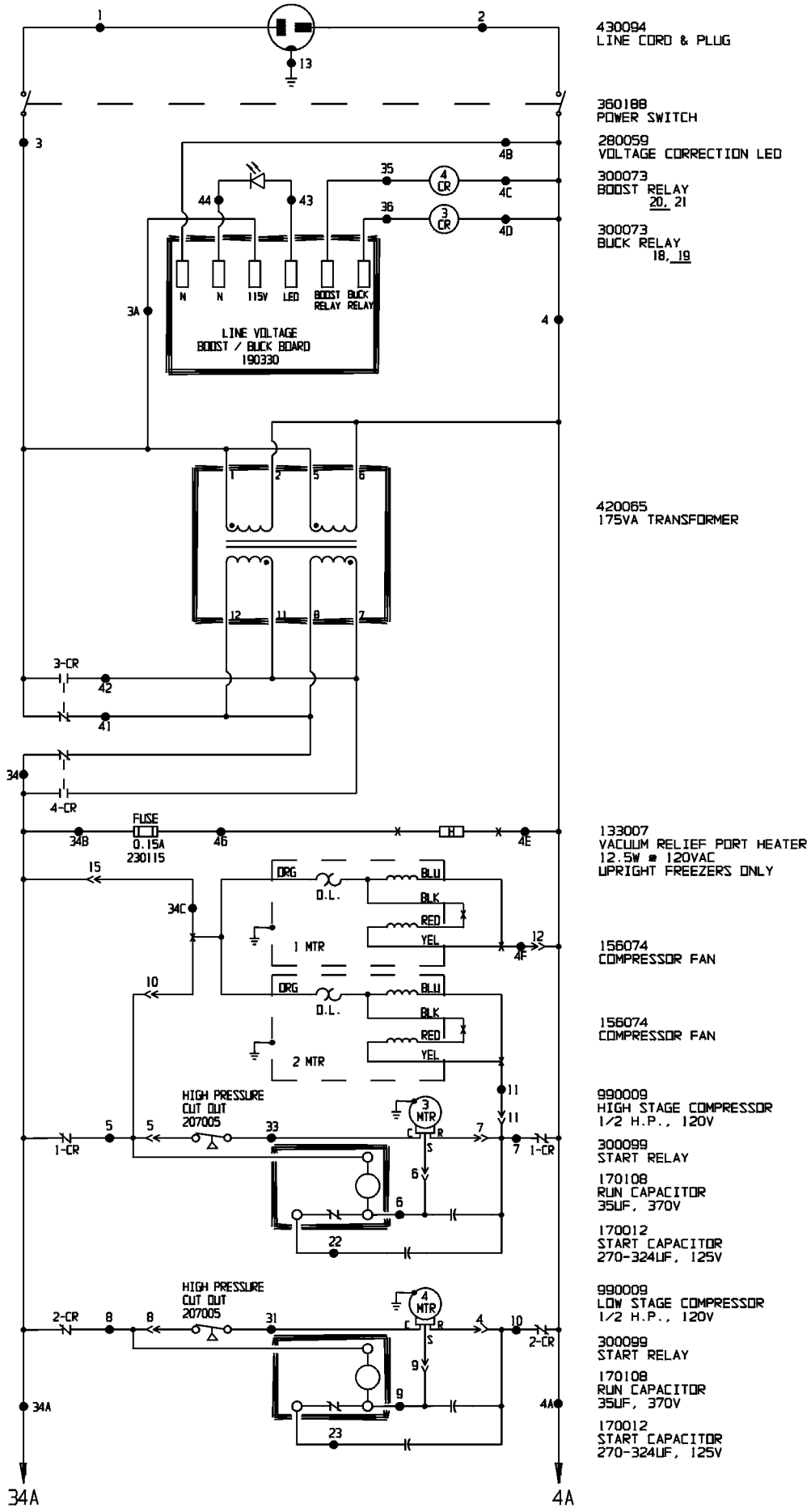

Electrical Schematic
Forma Models:
8416 and 8426

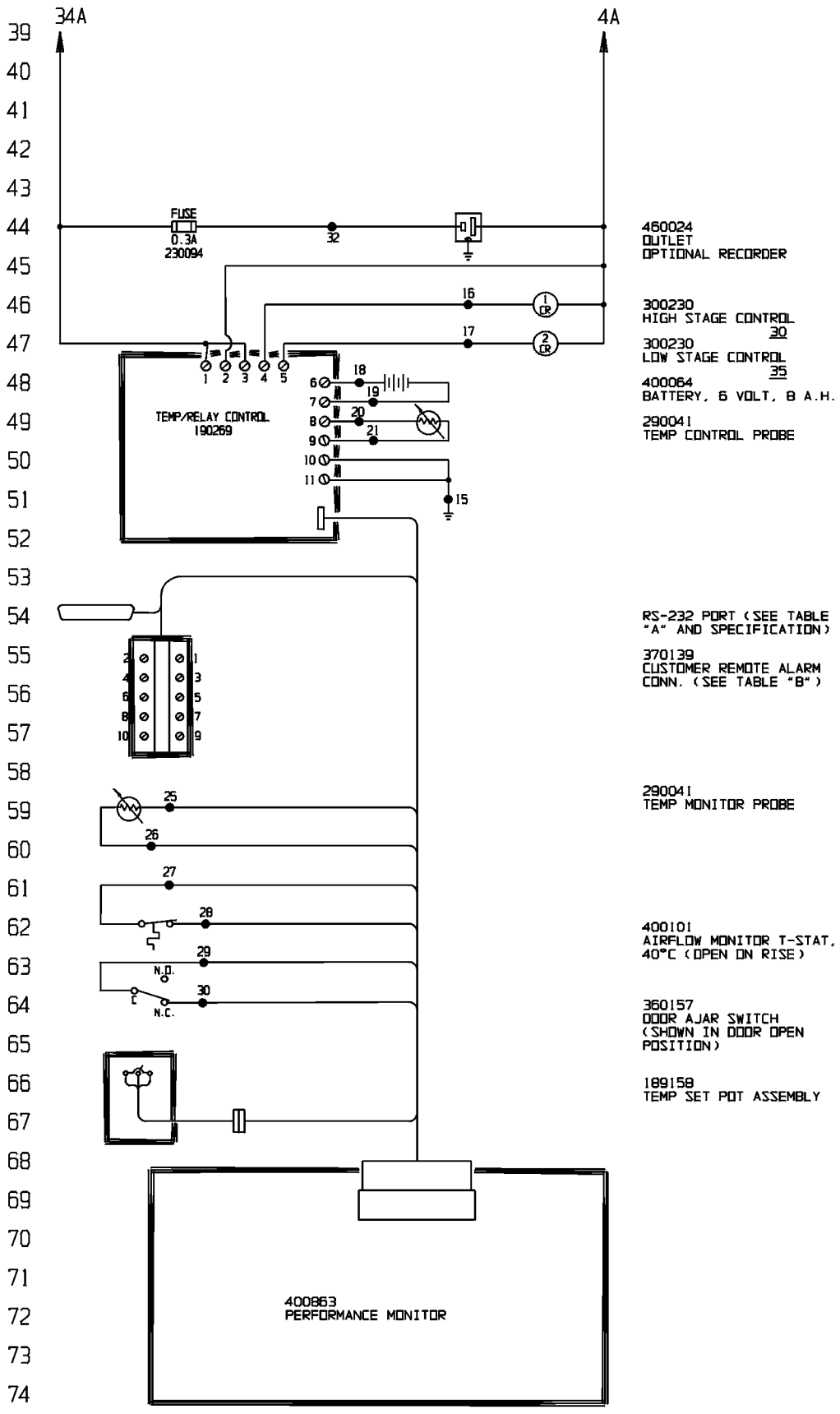

Electrical Schematic
Forma Models:
8416 and 8426

WIRE REFERENCE CHART

WIRE #	GAUGE	COLOR
1	14	BLK
2	14	WHT
3	14	BRN
3A	20	BRN
4	14	WHT
4A	20	WHT
4B	20	WHT
4C	20	WHT
4D	20	WHT
4E	14	BLU
4F	14	BLU
5	14	BRN
6	14	RED
7	14	YEL
8	14	BLK
9	14	PUR
10	14	ORG
11	14	YEL
13	14	GRN
15	20	GRN
16	20	YEL
17	20	ORG
18	20	RED
19	20	BLK
20	22	RED
21	22	WHT
22	14	GRY
23	14	BLU
25	22	RED
26	22	WHT
27	20	BLK
28	20	BLK
29	20	RED
30	20	BLK
31	14	BLK
32	20	PUR
33	14	BRN
34	14	BLK
34A	20	BLK
34B	14	BRN
34C	14	BLK
35	20	ORG
36	20	YEL
41	14	RED
42	14	BLK
43	20	RED
44	20	BLK
46	14	BLK

TABLE "A"

RS-232 PORT	
PIN# 2	$\overline{TXD}$
PIN# 3	$\overline{RXD}$
PIN# 7	GND

RS-232 SPECIFICATION

BAUD = 1200
PARITY = N
BITS = 8
STOP BITS = 2

TABLE "B"

CUST. REMOTE ALARM CONNECTIONS	
TERM.#	DESCRIPTION
1	OVERTEMP COM.
2	OVERTEMP N.C.
3	OVERTEMP N.O.
4	MILLIVOLT OUT (POS.)
5	UNDERTEMP N.C.
6	MILLIVOLT OUT (NEG.)
7	UNDERTEMP COM.
8	UNDERTEMP N.O.
9	(NOT USED)
10	(NOT USED)

NOTES:

⊕	Denotes Terminal Strip Connection	Parts List Reference Number	
4-CR	Lost Relay Number	○	Assembly
N/A	Lost Terminal Number	⬠	Panel
46	Lost Wire Number	⬡	Refrigeration
		□	Wiring

CUSTOMER APPROVAL/REFERENCE
APPROVED BY
APPROVING FIRM
DATE OF APPROVAL

Forma Scientific
BOX 649 MARIETTA, OHIO 45750 TELEX 24-5394
TOLL FREE USA 800-848-2882, OHIO 614-373-4763

REV	ECR NO.	DATE	BY	CAD	APPD	DESCRIPTION OF REVISION
10	FR-585	8-4-93	AT	AT		REMOVED BASE AIR T-STAT
9	FR-571	7-1-93	AT	AT	LDN	CORRECTED HEATER NUMBER
8	FR-465	5-5-93	AT	AT	LDN	REDESIGN REVERSE AIR FLOW
7	FR-533	3-1-93	AT	AT	LDN	400101 WAS 270115, REWIRED FAN
6	FR-418	2-8-92	AT	AT	LDN	ADDED VOLTAGE BOOST/BUCK

DATE 10-21-87	DWN GLM	CAD PK	APPD LDN	SCALE NONE
CUSTOMER				
JOB TITLE 8416 & 8426 FREEZERS				
DWG TITLE ELECTRICAL SCHEMATIC				
LOCATION FREEZERS01	JOB NUMBER	DRAWING NUMBER 8416-70-0-D		

Electrical Schematic
Forma Models:
8416 and 8426

POWER CONNECTION
208/230V, 1Ø, 2W, 50/60HZ, 12.0 FLA

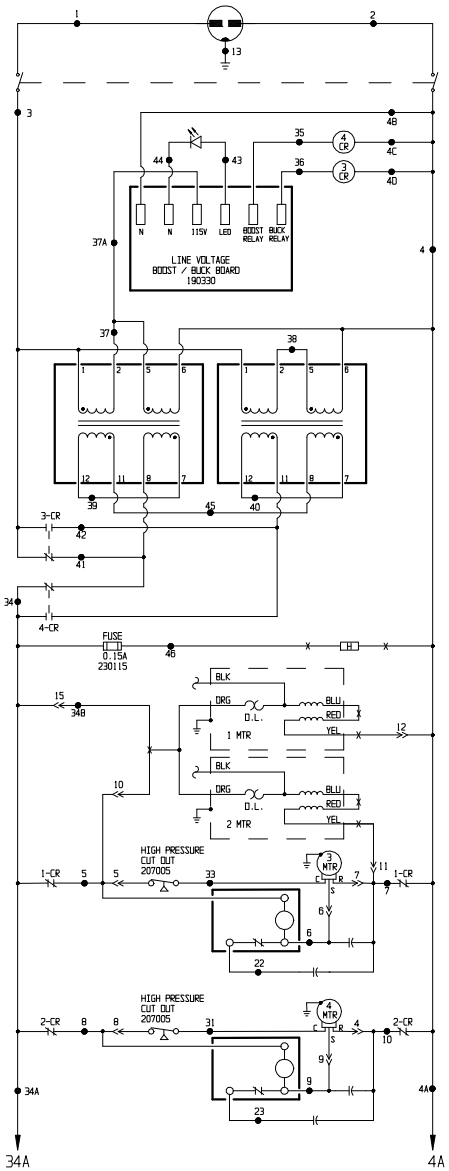

430095
LINE CORD & PLUG

360188
POWER SWITCH

280059
VOLTAGE CORRECTION LED

300073
BOOST RELAY
20, 21

300073
BUCK RELAY
18, 19

420066
130VA TRANSFORMER, 2

133008
VACUUM RELIEF PORT HEATER
12.5W @ 240VAC
UPRIGHT FREEZERS ONLY

156074
COMPRESSOR FAN

156074
COMPRESSOR FAN

990004
HIGH STAGE COMPRESSOR
1/2 H.P., 220V

300095
START RELAY

170101
RUN CAPACITOR
5UF, 370V

170010
START CAPACITOR
88-108UF, 250V

990004
LOW STAGE COMPRESSOR
1/2 H.P., 220V

300095
START RELAY

170101
RUN CAPACITOR
5UF, 370V

170010
START CAPACITOR
88-108UF, 250V

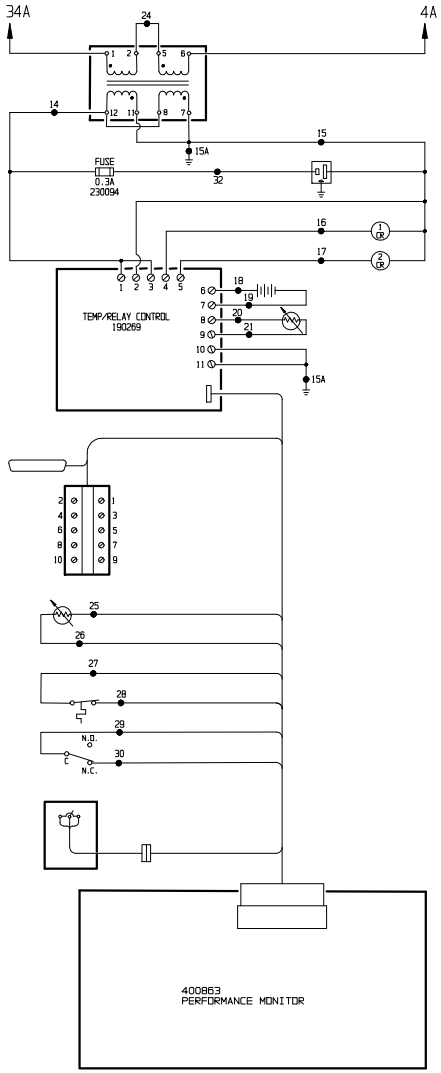

420043
STEPDOWN TRANSFORMER

460024
RECORDER OUTLET

300230
HIGH STAGE CONTROL
30

300230
LOW STAGE CONTROL
35

400064
BATTERY, 6 VOLT, 8 A.H.

290041
TEMP CONTROL PROBE

RS-232 PORT (SEE TABLE "A" AND SPECIFICATION)

370139
CUSTOMER REMOTE ALARM CONN. (SEE TABLE "B")

290041
TEMP MONITOR PROBE

400101
AIRFLOW MONITOR T-STAT, 40°C (OPEN ON RISE)

360157
DOOR AJAR SWITCH (SHOWN IN DOOR OPEN POSITION)

189158
TEMP SET POT ASSEMBLY

WIRE REFERENCE CHART

WIRE #	GAUGE	COLOR
1	14	BRN
2	14	BLU
3	14	BRN
4	14	BLU
4A	20	BLU
4B	20	BLU
4C	20	BLU
4D	20	BLU
5	14	BRN
6	14	RED
7	14	YEL
8	14	BLK
9	14	PUR
10	14	ORG
13	14	GRN/YEL
14	20	BLK
15	20	WHT
15A	20	GRN
16	20	YEL
17	20	ORG
18	20	RED
19	20	BLK
20	22	RED
21	22	WHT
22	14	GRY
23	14	BLU
24	20	PUR
25	22	RED
26	22	WHT
27	20	BLK
28	20	BLK
29	20	RED
30	20	BLK
31	14	BLK
32	20	PUR
33	14	BRN
34	14	BRN
34A	20	BRN
34B	14	BLK
35	20	ORG
36	20	YEL
37	14	PUR
37A	20	PUR
38	14	PUR
39	14	ORG
40	14	YEL
41	14	RED
42	14	BLK
43	20	RED
44	20	BLK
45	14	GRY
46	14	BLK

TABLE "A"

RS-232 PORT	
PIN# 2	TXD
PIN# 3	RXD
PIN# 7	GND

RS-232 SPECIFICATION

BAUD = 1200
PARITY = N
BITS = 8
STOP BITS = 2

TABLE "B"

CUST. REMOTE ALARM CONNECTIONS	
TERM.#	DESCRIPTION
1	OVERTEMP COM.
2	OVERTEMP N.C.
3	OVERTEMP N.O.
4	MILLIVOLT OUT (POS.)
5	UNDERTEMP N.C.
6	MILLIVOLT OUT (NEG.)
7	UNDERTEMP COM.
8	UNDERTEMP N.O.
9	(NOT USED)
10	(NOT USED)

NOTES:

⊕	Denotes Terminal Strip Connection	Parts List Reference Number	
4-CR	Last Relay Number	○	Assembly
N/A	Last Terminal Number	⬠	Panel
46	Last Wire Number	⬡	Refrigeration
		□	Wiring

CUSTOMER APPROVAL/REFERENCE
APPROVED BY
APPROVING FIRM
DATE OF APPROVAL

Forma Scientific
BOX 649 MARIETTA, OHIO 45750 TELEX 24-5384
TOLL FREE USA 800-848-3080, OHIO 614-373-4763

REV	ECR NO.	DATE	BY	CAD	APPD	DESCRIPTION OF REVISION
9	FR-585	8-4-93	AT	AT		REMOVED BASE AIR T-STAT
8	FR-571	7-1-93	AT	AT	LDN	CHANGED FLA & TITLE BLOCK
7	FR-465	5-5-93	AT	AT	LDN	REDESIGN REVERSE AIR FLOW
6	FR-533	3-1-93	AT	AT	LDN	400101 WAS 270115, REWIRED FAN
5	FR-418	2-8-92	AT	AT	LDN	ADDED VOLTAGE BOOST/BUCK

DATE 10-21-87	DWN GLM	CAD PK	APPD LDN	SCALE NONE	
CUSTOMER					
JOB TITLE	8417, 8425 & 8460 FREEZERS				
DWG TITLE	ELECTRICAL SCHEMATIC				
LOCATION FREEZERS01	JOB NUMBER	DRAWING NUMBER 8417-70-0-D			