Technical Data Sheet

Fisher Scientific 20.9 Cuft Value General Purpose Freezer

Revision-2

Specifications	Catalog Number
	20LFEEFSA
	Production Model Number
	20LFEEFSA
	Application, Rating And Electrical Data
Application	20.9 Cuft Value General Purpose Freezer
Storage Volume	20.9 Cuft / 591.8 Liters
Temperature Rating	-12°C to -20°C
Instrument Rated Current	5.0A
Building Supply Rating	115VAC ±10% Of Normal Rated Line
Power Plug/Power Cord Length	Three prong NEMA 5-15P, 3.048 Meters (10 Feet)
Agency Listings	cCSAus
Indoor/Outdoor Usage	Indoor Use Only
Application Environment	Non-Corrosive, Non-Flammable, Non-Explosive, Good Air Ventilation
Ambient Operating Temperature	15° C - 32° C (60° F - 90° F)
	Refrigeration Configuration
Refrigeration System	Vapour Compression System
Compressor / Number	Hermetic Compressor/1
Condenser Type/Number	Foamed In Condenser
Expansion Device	Capillary Tube
Evaporator Type	Shelf Evaporator
Defrost Method	Manual Defrost
Refrigerant Charge/Flammability	R134A
	Controller/Electrical System Configuration And Features
Controller Level	Knee Level
Power Switch	Not Present
Controller Type	Mechanical Thermostat
Setpoint Security / Programmable	No/ Yes
Compressor Safe Guard	High Temp Cutout Switch / Overload Protector
Control Sensor	Capillary tube
Remote Alarm Terminals	Not Present
Power Failure Alarm	Not Present
Data Logger / Chart Recorder	Not Present
	Dimensions And Construction
Interior Dimensions (H x W x D)	57.8" X 27.8" X 23.8" (146.7 X 70.49 X 60.3 cm)
Exterior Dimensions (H x W x D)	73.13" X 34" X 32.13" (185.7 X 86.4 X 81.6 cm)
Insulation	Polyurethene Foam
Door Perimeter heater	Not Present
Shelves / Capacity	(4) Fixed Shelves, (6) Fixed Door Shelves
All-Direction Casters	Adjustable Leveling Feet
Ship Weight	198lbs / 89.8kg
Access Port / Dia	Not Present
	Typical Performance Characteristics

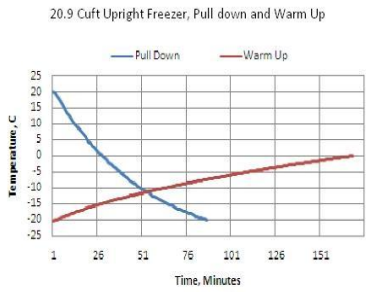

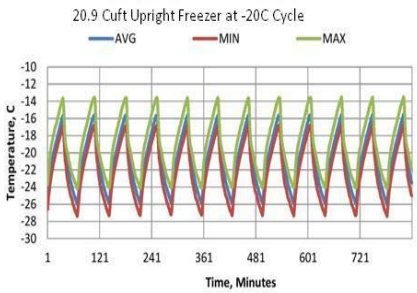

Test Unit Series Number or MSO Number:	19335-AA-T2
Cabinet Load:	Unloaded
Average Cabinet Temp at -20C Cycle (C):	-20.9
Peak Variation from Setpoint (C):	+6.5 / -8
Uniformity (C):	3.1
Stability (C):	10.7
1-min Door Opening Recovery to -20C (min):	20
Duty Cycle at -20C (%):	47
Cycle (on/off) rate at -20C (min):	33 / 37
Energy Consumption (kw-hr/day):	1.2
Heat Rejection Rate (btu/hr):	174
Pull Down Time (to -20C) (min):	86
Warm Up Time (-20C to 0C) (min):	24

1) Performance is nominal and individual units may vary.
2) Freezer performance will differ due to product amount, product size and operating conditions.
3) Continuous product enhancements may, without notice, result in amendments or ommisions to this specification.Fisher Scientific cannot accept responsibility for damage, injury, loss or expenses resulting from misapplication of the information herein.

© 2016 Fisher Scientific.All trademarks are the property of Fisher Scientific and its subsidiaries. Specifications, terms and pricing are subject to change. Not all products are available in all countries. Please consult your local sales representative for details.

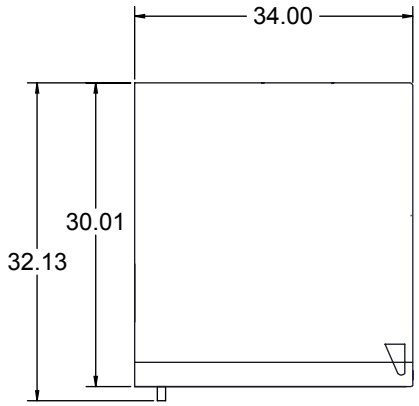

TOPVIEW

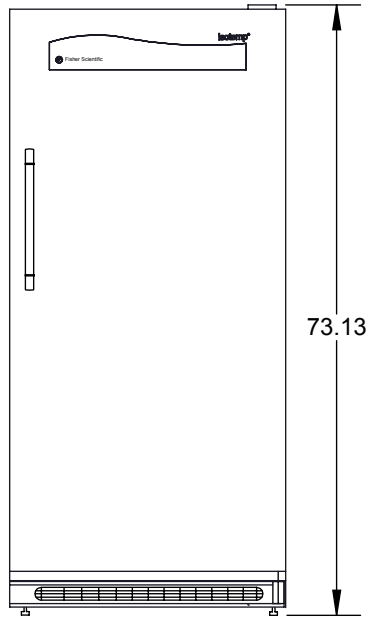

FRONT VIEW

DO NOT USE FOR ENGINEERING PURPOSES.
SUBJECT TO CHANGE WITHOUT NOTICE

Fisher Scientific

20.9 Cu.Ft. GENERAL PUPOSE FREEZER