thermo scientific

Thermo Scientific Solaris Shaker Series

Instruction Manual

70900190-e • 2023-03

ThermoFisher SCIENTIFIC

Contents

Preface 5
About This Manual 5
Intended Use 5
Open Air Shaker 5
Incubated and Refrigerated Shaker 5
Required Skills 5
Signal Words and Symbols 6
Symbols used on Shaker and Accessories 6
Symbols used in the Instruction Manual 7
Safety Instructions 7

1. Technical Specifications 12
1. 1. Technical Data 12
Thermo Scientific Solaris 2000 Shaker 12
Thermo Scientific Solaris 4000 Shaker 13
Thermo Scientific Solaris 2000 I Shaker 14
Thermo Scientific Solaris 4000 I Shaker 15
Thermo Scientific Solaris 2000 R Shaker 16
Thermo Scientific Solaris 4000 R Shaker 17
1. 2. Accessories 18
1. 2. 1. Platforms 19
1. 2. 2. Flask Clamps 20
1. 2. 3. Microplate / DeepWell Plate Clamps 24
1. 2. 4. Test Tube Racks 25
1. 2. 5. Adjustable Angle Test Tube Rack Holders 29
1. 2. 6. Adjustable Vessel Clamps 30
1. 2. 7. Square Media Clamps 32
1. 2. 8. Nalgene Beaker Racks 33
1. 2. 9. Separatory Funnel Clamp 38
1. 2. 10. Utility Tray 39
1. 2. 11. Adhesive Mats 40
1. 2. 12. General Accessories 42
1. 3. Directives and Standards 43

1. 4. Product Overview 44
1. 4. 1. Solaris 2000 44
1. 4. 2. Solaris 4000 44
1. 4. 3. Solaris 2000 I / 2000 R. 45
1. 4. 4. Solaris 4000 I / 4000 R. 45
1. 4. 5. Connections 46

2. Transport and Set Up 49
2. 1. Unpacking 49
Items Supplied 49
2. 2. Location. 50
2. 3. Transporting 52
Handling the Shaker. 52
2. 4. Leveling 53
2. 5. Mains Connection 53
2. 6. Initial Startup. 55
2. 7. Storage 60
2. 8. Shipping. 60

3. Operation 61
3. 1. Power on / off 61
3. 2. Graphical User Interface 61
3. 2. 1. Set Basic Shaker Operating Parameters 62
3. 2. 2. Status 67
3. 2. 3. Settings. 70
3. 2. 4. Programs. 80
3. 3. Accessories. 90
3. 3. 1. Platform Installation 91
3. 3. 2. Flask Clamp and Vessel Installation. 94
3. 3. 3. Square Clamp Installation 96
3. 3. 4. Test Tube Rack Installation. 98
3. 3. 5. Adjustable Angle Test Tube Rack Holder Installation 99
3. 3. 6. Microplate / DeepWell-Plate Clamp Installation. 100
3. 3. 7. Adjustable Vessel Clamp Installation 101

3. 3. 8. Beaker Rack Installation 103
3. 3. 9. Separatory Funnel Clamp Installation. 104
3. 3. 10. Utility Tray Installation 107
3. 3. 11. Adhesive Mat Installation and Use 108
3. 3. 12. Gassing Manifold Installation 115

3. 4. Loading and Normal Use 117

Loading 118
Normal Use 119

---

4. Maintenance and Care 123

4. 1. Basics 124

Inspection of Accessories 125

4. 2. Cleaning 125

Touchscreen 125

4. 3. Disinfection 126

4. 4. Decontamination 126

4. 5. Autoclaving 127

4. 6. Temperature Calibration 128

4. 6. 1. Temperature Calibration Best Practices 128
4. 6. 2. Temperature Calibration Procedure 128
4. 6. 3. Temperature Calibration Lookup 132

4. 7. Firmware Installation 132

4. 8. Platform Replacement 136

4. 9. Service 136

4. 10. Shipping and Disposal 136

---

5. Troubleshooting 137

GPL (General Public License) 140

Index 141

Preface

About This Manual

This user manual describes the following shakers and the compatible accessories ("1. 2. Accessories" on page 18):

Shaker	Art. No.
Thermo Scientific Solaris 2000 Shaker, 100–240 V ±10 %, 50 / 60 Hz	**SK2000**
Thermo Scientific Solaris 4000 Shaker, 100–240 V ±10 %, 50 / 60 Hz	**SK4000**
Thermo Scientific Solaris 2000 I Shaker, 100–120, 200–240 V ±10 %, 50 / 60 Hz	**SK2001**
Thermo Scientific Solaris 4000 I Shaker, 100–120, 200–240 V ±10 %, 50 / 60 Hz	**SK4001**
Thermo Scientific Solaris 2000 R Shaker, 100–240 V ±10 %, 50 / 60 Hz	**SK2002**
Thermo Scientific Solaris 4000 R Shaker, 100–240 V ±10 %, 50 / 60 Hz	**SK4002**

Rather than by their full product name, the descriptions and instructions given in this manual simply refer to each shaker by class:

- Open Air Shaker
- Incubated Shaker
- Refrigerated Shaker

Intended Use

Open Air Shaker

A device used in research and manufacturing to shake solutions in a 2D orbit while controlling speed and time in applications.

Incubated and Refrigerated Shaker

A device used in research and manufacturing to shake solutions in a 2D orbit while controlling speed, time and temperature in applications.

Required Skills

This shaker must be operated by trained personnel only.

Signal Words and Symbols

Signal Word	Degree of Hazard
WARNING	Indicates a hazardous situation that, if not avoided, could result in death or serious injury.
CAUTION	Indicates a hazardous situation that, if not avoided, could result in minor or moderate injury.
NOTICE	Indicates information considered important, but not hazard-related.

Symbols used on Shaker and Accessories

Observe the information contained in this instruction manual to keep yourself and your environment safe.

	Refer to instruction manual
	Disconnect mains plug
	General hazard
	Hazard caused by hot surface
	Risk of finger or hand injuries caused by mechanical parts shutting inadvertently

Symbols used in the Instruction Manual

Observe the information contained in the instruction manual to keep yourself and your environment safe.

	General hazard		Electrical hazard
	Biological hazard		Danger of cuts
	Hazard caused by flammable materials		Indicates information considered important, but not hazard-related.
	Risk of finger or hand injuries caused by mechanical parts shutting inadvertently		

Safety Instructions

WARNING

Not following these safety instructions can lead to hazardous situations that, if not avoided, could result in death or serious injury.

- Observe the safety instructions.
- The shaker is to be used for its intended use only. Improper use can cause damage, contamination, and injuries with fatal consequences.
- The shaker must be operated by trained personnel only.
- It is the obligation of the operator to make sure, that the proper personal protective equipment is used. Mind the “Laboratory Biosafety Manual” of the World Health Organization (WHO) and the regulations in your country.

WARNING

Damage from inappropriate power supply.

Make sure that the shaker is plugged only into sockets which have been properly grounded.

WARNING

Risk from handling hazardous substances.

When working with corrosive samples (salt solutions, acids, bases), the accessories and the shaker have to be cleaned thoroughly.

- The shaker is neither inert nor protected against explosion. Never use the shaker in an explosion-prone environment.
- Do not shake toxic or radioactive materials or any pathogenic micro-organisms without suitable safety precautions.
- If shaking any hazardous materials mind the "Laboratory Biosafety Manual" of the World Health Organization (WHO) and any local regulations. When shaking microbiological samples from the Risk Group II (according to the "Laboratory Biosafety Manual" of the World Health Organization (WHO)), aerosol-tight biological seals have to be used. Look on the Internet page of the World Health Organization (www.who.int) for the "Laboratory Biosafety Manual". For materials in a higher risk group, extra safety measures must be taken.
- If toxins or pathogenic substances have contaminated the shaker or its parts, appropriate disinfection and decontamination measures have to be taken ("Decontamination" on page 126; „Disinfection" on page 126).
- If a hazardous situation occurs, turn off the power supply to the shaker and leave the area immediately.

WARNING

Damage to health from infectious substances.

If an accidental spill places liquids or other materials under the platform, immediately power off the shaker, unplug it, and remove the platform ("Platforms" on page 19).

Clean up the spill following your regular laboratory procedures. Use proper personal protective equipment.

WARNING

Damage to health from shaking explosive or flammable materials or substances.

Do not shake explosive or flammable materials or substances.

CAUTION

Burnings from hot surfaces.

In a temperature controlled shaker the surfaces like platform and accessories can get hot under the hood. Do not touch hot surfaces. Wait until the hot surfaces have cooled down.

CAUTION

Cutting injuries from glass shards.

A disengaged platform and accessories, like clamps, can lead to broken glass if vessels fall off the shaker. Make sure that the platform and accessories are installed properly by using the correct tools and screws. Make sure that the clamps are capable to hold the load of the vessel and sample at chosen speed. Clamps with your individually configured load may have lower speed capability than the stability limitation of the shaker. Refer to "3. 4. Loading and Normal Use" on page 117.

Pay attention to any unusual sound. This can indicate a disengaged platform or accessories.

CAUTION

Damage to shaker or malfunction due to a damaged touchscreen.

- Do not operate the shaker if the touchscreen is damaged.
- Power off the shaker. Disconnect the mains plug. Have the touchscreen replaced by an authorized service technician.

CAUTION

Biological harm due to broken or leaking vessels.

Improperly installed accessories can lead to spilled samples.

- Make sure that accessories are installed properly by using the correct tools and screws.
- Make sure that accessories fit reasonably on the platform.
- Always use a vessel with an accessory of the proper size.
- Vessels must be intact and installed properly.

CAUTION

Safety can be impaired by improper loading and damaged accessories.

- Always make sure that the load (accessories and samples) is distributed as equally as possible, especially when operating a dual stack platform.
- Do not use accessories which show signs of corrosion or cracks. Contact customer service for further information.
- Use only shakers which have been loaded properly.
- Never overload the shaker.
- Make sure the accessories are installed properly before operating the shaker. Follow the instructions in section „Accessories“ on page 90.

CAUTION

Physical harm caused by ignoring operative basics.

- Never operate the shaker without a properly installed platform.
- Never use the shaker if parts of its exterior are damaged or missing.
- Never use a shaker with a defective hood spring. A defective hood spring is unable to safely hold the hood in the fully open position.
- Do not move the shaker while it is running.
- Do not lean on the shaker.
- Never load or unload the shaker until it has come to a complete stop and this has been confirmed on the touchscreen.
- Do not put anything on the shaker while it is running.
- Do not touch the platform or any accessories on the shaker while it is running.
- The shaker housing is not to be opened by the operator.

NOTICE

Protection may be impaired by incompatible accessories.

Use only accessories for this shaker which have been approved by Thermo Fisher Scientific. For updated lists check www.thermofisher.com.

NOTICE

To shut down the shaker:

Press the STOP key. Turn off the shaker at the main switch. Pull out the power supply plug. In an emergency disconnect the power supply.

1. Technical Specifications

1. 1. Technical Data

Thermo Scientific Solaris 2000 Shaker	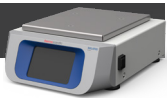		
Speed Range	15–525 rpm		
Running Time	99 h 59 min (1 min increments) or continuous mode		
Noise Level at max. Speed	50 dB (A) (1 m in front of the unit at 1.6 m height)		
Maximum Load (incl. Platform, Accessories and Samples)	25 kg (55 lbs)		
Electrical Connection	100–240 V ±10 %, 50 / 60 Hz		
Power Consumption	60 W		
Environmental Conditions			
For Storage and Shipping	Temperature: -10 °C to 55 °C Humidity: 15% to 85%		
For Operation	Use in interior spaces Altitudes of up to 3000 m above sea level Temperature: 5 °C to 40 °C Max. relative humidity 80% up to 31 °C; decreasing linearly to 50% relative humidity at 40 °C		
Pollution Degree	2		
Overvoltage Category	II		
IP	20		
Interfaces	**USB**	**Ethernet**	
	2x USB-A 2.0	RJ45	
Dimensions	**Length**	**Width**	**Height**
	47 cm (18.5 in)	37 cm (14.5 in)	15 cm (5.5 in)
Weight	20.9 kg (46,0 lbs)		

Table 1: Technical Data Solaris 2000

Thermo Scientific Solaris 4000 Shaker

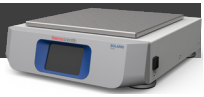

Speed Range	15–525 rpm
Running Time	99 h 59 min (1 min increments) or continuous mode
Noise Level at max. Speed	54 dB (A) (1 m in front of the unit at 1.6 m height)
Maximum Load (incl. Platform, Accessories and Samples)	43 kg (95 lbs)
Electrical Connection	100–240 V ±10 %, 50 / 60 Hz
Power Consumption	80 W
Environmental Conditions	
For Storage and Shipping	Temperature: -10 °C to 55 °C Humidity: 15% to 85%
For Operation	Use in interior spaces Altitudes of up to 3000 m above sea level Temperature: 5 °C to 40 °C Max. relative humidity 80% up to 31 °C; decreasing linearly to 50% relative humidity at 40 °C
Pollution Degree	2
Overvoltage Category	II
IP	20

Interfaces	**USB**	**Ethernet**
	2x USB-A 2.0	RJ45

Dimensions	**Length**	**Width**	**Height**
	65 cm (25.6 in)	58 cm (22.8 in)	18 cm (7 in)

Weight	75.1 kg (165.5 lbs)

Table 2: Technical Data Solaris 4000

Thermo Scientific Solaris 2000 I Shaker

Speed Range	15–525 rpm		
Temperature Setting Range	30–60 °C		
Temperature Stability in Flask at 37 °C	Ambient temperature 23 °C; for 1 h with stable chamber temperature ± 0.1 °C		
Temperature Uniformity in Flask at 37 °C	Ambient temperature 23 °C; for 1 h with stable chamber temperature ± 0.5 °C		
Running Time	99 h 59 min (1 min increments) or continuous mode		
Noise Level at max. Speed	52 dB (A) (1 m in front of the unit at 1.6 m height)		
Maximum Load (incl. Platform, Accessories and Samples)	16 kg (35 lbs), including 11 x 14 platform at 2.3 kg (5.1 lbs)		
Electrical Connection	100–120, 200–240 V ±10 %, 50 / 60 Hz		
Power Consumption	900 W		
Environmental Conditions			
For Storage and Shipping	Temperature: -10 °C to 55 °C Humidity: 15% to 85%		
For Operation	Use in interior spaces Altitudes of up to 3000 m above sea level Temperature: 5 °C to 40 °C Max. relative humidity 80% up to 31 °C; decreasing linearly to 50% relative humidity at 40 °C		
Pollution Degree	2		
Overvoltage Category	II		
IP	20		
Interfaces	**USB**	**Ethernet**	
	2x USB-A 2.0	RJ45	
Dimensions	**Length**	**Width**	**Height**
	70 cm (27.6 in)	36 cm (14.2 in)	46 cm (18.1 in)
With open Hood			79 cm (30.8 in)
Weight	44.9 kg (99 lbs)		

Table 3: Technical Data Solaris 2000 I

Thermo Scientific Solaris 4000 I Shaker

Speed Range	15–525 rpm		
Temperature Setting Range	30–60 °C		
Temperature Stability in Flask at 37 °C	Ambient temperature 23 °C; for 1 h with stable chamber temperature ± 0.1 °C		
Temperature Uniformity in Flask at 37 °C	Ambient temperature 23 °C; for 1 h with stable chamber temperature ± 0.5 °C		
Running Time	99 h 59 min (1 min increments) or continuous mode		
Noise Level at max. Speed	52 dB (A) (1 m in front of the unit at 1.6 m height)		
Maximum Load (incl. Platform, Accessories and Samples)	32 kg (70.5 lbs), including 18 x 18 platform at 4.3 kg (9.5 lbs)		
Electrical Connection	100–120, 200–240 V ±10 %, 50 / 60 Hz		
Power Consumption	900 W		
Environmental Conditions			
For Storage and Shipping	Temperature: -10 °C to 55 °C Humidity: 15% to 85%		
For Operation	Use in interior spaces Altitudes of up to 3000 m above sea level Temperature: 5 °C to 40 °C Max. relative humidity 80% up to 31 °C; decreasing linearly to 50% relative humidity at 40 °C		
Pollution Degree	2		
Overvoltage Category	II		
IP	20		
Interfaces	**USB**	**Ethernet**	
	2x USB-A 2.0	RJ45	
Dimensions	**Length**	**Width**	**Height**
	77 cm (30.3 in)	57 cm (22.4 in)	55 cm (21.7 in)
With open Hood			94 cm (36.7 in)
Weight	68.1 kg (150.1 lbs)		

Table 4: Technical Data Solaris 4000 I

Thermo Scientific Solaris 2000 R Shaker

Speed Range	15–525 rpm		
Temperature Setting Range	5–60 °C		
Temperature Stability in Flask at 37 °C	Ambient temperature 23 °C; for 1 h with stable chamber temperature ± 0.1 °C		
Temperature Uniformity in Flask at 37 °C	Ambient temperature 23 °C; for 1 h with stable chamber temperature ± 0.5 °C		
Running Time	99 h 59 min (1 min increments) or continuous mode		
Noise Level at max. Speed	56 dB (A) (1 m in front of the unit at 1.6 m height)		
Maximum Load (incl. Platform, Accessories and Samples)	16 kg (35 lbs), including 11 x 14 platform at 2.3 kg (5.1 lbs)		
Electrical Connection	100–240 V ±10 %, 50 / 60 Hz		
Power Consumption	350 W		
Environmental Conditions			
For Storage and Shipping	Temperature: -10 °C to 55 °C Humidity: 15% to 85%		
For Operation	Use in interior spaces Altitudes of up to 3000 m above sea level Temperature: 5 °C to 40 °C Max. relative humidity 80% up to 31 °C; decreasing linearly to 50% relative humidity at 40 °C		
Pollution Degree	2		
Overvoltage Category	II		
IP	20		
Interfaces	**USB**	**Ethernet**	
	2x USB-A 2.0	RJ45	
Dimensions	**Length**	**Width**	**Height**
	70 cm (27.6 in)	36 cm (14.2 in)	46 cm (18.1 in)
With open Hood			79 cm (30.8 in)
Weight	47.2 kg (104.1 lbs)		

Table 5: Technical Data Solaris 2000 R

Thermo Scientific Solaris 4000 R Shaker

Speed Range	15–525 rpm		
Temperature Setting Range	4–60 °C		
Temperature Stability in Flask at 37 °C	Ambient temperature 23 °C; for 1 h with stable chamber temperature ± 0.1 °C		
Temperature Uniformity in Flask at 37 °C	Ambient temperature 23 °C; for 1 h with stable chamber temperature ± 0.5 °C		
Running Time	99 h 59 min (1 min increments) or continuous mode		
Noise Level at max. Speed	56 dB (A) (1 m in front of the unit at 1.6 m height)		
Maximum Load (incl. Platform, Accessories and Samples)	32 kg (70.5 lbs), including 18 x 18 platform at 4.3 kg (9.5 lbs)		
Electrical Connection	100–240 V ±10 %, 50 / 60 Hz		
Power Consumption	750 W		
Environmental Conditions			
For Storage and Shipping	Temperature: -10 °C to 55 °C Humidity: 15% to 85%		
For Operation	Use in interior spaces Altitudes of up to 3000 m above sea level Temperature: 5 °C to 40 °C Max. relative humidity 80% up to 31 °C; decreasing linearly to 50% relative humidity at 40 °C		
Pollution Degree	2		
Overvoltage Category	II		
IP	20		
Interfaces	**USB**	**Ethernet**	
	2x USB-A 2.0	RJ45	
Dimensions	**Length**	**Width**	**Height**
	77 cm (30.3 in)	57 cm (22.4 in)	55 cm (21.7 in)
With open Hood			94 cm (36.7 in)
Weight	74.9 kg (165.1 lbs)		

Table 6: Technical Data Solaris 4000 R

1. 2. Accessories

CAUTION

Protection may be impaired by incompatible accessories.
Use only accessories for this shaker which have been approved by Thermo Fisher Scientific.

For updated lists check www.thermofisher.com.

1. 2. 1. Platforms

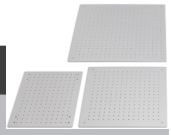

Platform		
Solaris 2000	**Weight**	
Thermo Scientific Solaris 12 x 14 Universal Platform	2.7 kg (5.9 lbs)	SK1214
Thermo Scientific Solaris 12 x 14 Dual Stack Universal Platform	6.4 kg (14.1 lbs)	SK1214D
Thermo Scientific Solaris 12 x 14 Dual Stack Universal Platform Upgrade Kit		SK1214DK
Thermo Scientific Solaris 18 x 18 Universal Platform	4.3 kg (9.4 lbs)	SK1818
Thermo Scientific Solaris 18 x 18 Dual Stack Universal Platform	9.7 kg (21.3 lbs)	SK1818D
Thermo Scientific Solaris 18 x 18 Dual Stack Universal Platform Upgrade Kit		SK1818DK
Thermo Scientific Solaris 18 x 24 Universal Platform	6.0 kg (13.2 lbs)	SK1824
Solaris 4000		
Thermo Scientific Solaris 18 x 30 Universal Platform	7.5 kg (16.5 lbs)	SK1830
Thermo Scientific Solaris 18 x 30 Dual Stack Universal Platform	16.3 kg (35.9 lbs)	SK1830D
Thermo Scientific Solaris 18 x 30 Dual Stack Universal Platform Upgrade Kit		SK1830DK
Thermo Scientific Solaris 36 x 24 Universal Platform	12.0 kg (26.4 lbs)	SK3624
Solaris 2000 I / 2000 R		
Thermo Scientific Solaris 11 x 14 Universal Platform	2 .3 kg (5.1 lbs)	SK1114
Solaris 4000 I / 4000 R		
Thermo Scientific Solaris 18 x 18 Universal Platform	4.3 kg (9.5 lbs)	SK1818
Spare Kits and Accessories		
Clamp Spare Kit (Screws)		SK1001
Platform Spare Kit Small (Platform Screws, Tool)		SK0100
Platform Spare Kit Large (Platform Screws, Tool)		SK0101
Screwdriver for Accessories		75004131

Table 7: Available Platforms

1. 2. 2. Flask Clamps

For Solaris 2000 Platforms

	Art. No.	Universal			Dual Stack	
		12 x 14	18 x 18	18 x 24	12 x 14	18 x 18
10 ml Erlenmeyer	30150BI	72	113	157	140	226
25 ml Erlenmeyer	30151	42	64	80	80	124
50 ml Erlenmeyer	30152BI	42	64	80	80	124
125 ml Erlenmeyer	30153	15	32	40	30	52
250 ml Erlenmeyer	30154BI	9	16	24	16	32
300 ml Erlenmeyer	30155	9	16	20	16	32
500 ml Erlenmeyer	30156BI	9	16	20	16	32
1 l Erlenmeyer	30157BI	4	9	10	8	16
2 l Erlenmeyer	30158	3	5	6	–	–
4 l Erlenmeyer	30159	1	4	4	–	–
5 l Erlenmeyer	30159B	1	2	4	–	–
6 l Erlenmeyer	30160	1	2	2	–	–
2800 ml Fernbach Flask	30162	1	4	4	–	–
Low form culture Flask 2,5 l	30161	1	1	2	–	–

Table 8: Available Flask Clamps for Solaris 2000 Platforms

For Solaris 4000 Platforms

	Art. No.	Universal		Dual Stack
		18 x 30	36 x 24	18 x 30
10 ml Erlenmeyer	30150BI	203	187	402
25 ml Erlenmeyer	30151	112	187	220
50 ml Erlenmeyer	30152BI	112	187	220
125 ml Erlenmeyer	30153	46	83	92
250 ml Erlenmeyer	30154BI	28	40	56
300 ml Erlenmeyer	30155	28	40	56
500 ml Erlenmeyer	30156BI	28	40	56
1 l Erlenmeyer	30157BI	14	20	28
2 l Erlenmeyer	30158	6	11	12
4 l Erlenmeyer	30159	6	8	–
5 l Erlenmeyer	30159B	5	8	–
6 l Erlenmeyer	30160	3	6	–
2800 ml Fernbach Flask	30162	6	8	12
Low Form Culture Flask 2,5 l	30161	3	6	6

Table 9: Available Flask Clamps for Solaris 4000 Platforms

For Solaris 2000 I / 2000 R Platform

	Art. No.	Universal 11 x 14
10 ml Erlenmeyer	30150BI	59
25 ml Erlenmeyer	30151	35
50 ml Erlenmeyer	30152BI	35
125 ml Erlenmeyer	30153	15
250 ml Erlenmeyer	30154BI	7
300 ml Erlenmeyer	30155	7
500 ml Erlenmeyer	30156BI	7
1 l Erlenmeyer	30157BI	4
2 l Erlenmeyer	30158	2
4 l Erlenmeyer	30159	–
5 l Erlenmeyer	30159B	–
6 l Erlenmeyer	30160	–
2800 ml Fernbach Flask	30162	1
Low Form Culture Flask 2,5 l	30161	1

Table 10: Available Flask Clamps for Solaris 2000 I / 2000 R Platform

For Solaris 4000 I / 4000 R Platform

	Art. No.	Universal 18 x 18
10 ml Erlenmeyer	30150BI	113
25 ml Erlenmeyer	30151	64
50 ml Erlenmeyer	30152BI	64
125 ml Erlenmeyer	30153	32
250 ml Erlenmeyer	30154BI	16
300 ml Erlenmeyer	30155	16
500 ml Erlenmeyer	30156BI	16
1 l Erlenmeyer	30157BI	9
2 l Erlenmeyer	30158	6
4 l Erlenmeyer	30159	–
5 l Erlenmeyer	30159B	–
6 l Erlenmeyer	30160	–
2800 ml Fernbach Flask	30162	4
Low Form Culture Flask 2,5 l	30161	1

Table 11: Available Flask Clamps for Solaris 4000 I / 4000 R Platform

1. 2. 3. Microplate / DeepWell Plate Clamps

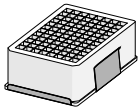

For Solaris 2000 Platforms

	Art. No.	Universal			Dual Stack	
		12 x 14	18 x 18	18 x 24	12 x 14	18 x 18
Microplate / DeepWell Plate	30175	7	12	16	14	24

Table 12: Capacity of Microplate / DeepWell Plate Clamps for Solaris 2000 Platforms

For Solaris 2000 I / 2000 R Platform

	Art. No.	Universal
		11 x 14
Microplate / DeepWell Plate	30175	6

Table 13: Capacity of Microplate / DeepWell Plate Holders for Solaris 2000 I / 2000 R Platform

For Solaris 4000 Platforms

	Art. No.	Universal		Dual Stack
		18 x 30	36 x 24	18 x 30
Microplate / DeepWell Plate	30175	22	36	42

Table 14: Capacity of Microplate / DeepWell Plate Holders for Solaris 4000 Platforms

For Solaris 4000 I / 4000 R Platform

	Art. No.	Universal
		18 x 18
Microplate / DeepWell Plate	30175	10

Table 15: Capacity of Microplate / DeepWell Plate Holders for Solaris 4000 I / 4000 R Platform

1. 2. 4. Test Tube Racks

For Solaris 2000 Platforms

	Art. No.	Universal			Dual Stack	
		12 x 14	18 x 18	18 x 24	12 x 14	18 x 18
Half Size						
10–13 mm, Red, 6 x 6 Array	30181	8	12	15	14	24
14–16 mm, Orange, 6 x 6 Array	30183	5	9	11	9	17
17–20 mm, White, 4 x 5 Array	30185	7	11	14	13	21
21–25 mm, Blue, 4 x 4 Array	30187	6	9	11	10	17
26–30 mm, Green, 3 x 3 Array	30189	6	9	12	11	18
Micro Centrifuge, 1.5 ml, Blue, 4 x 6 Array	30191	6	10	13	11	19
Full Size						
10–13 mm, 6 x 12 Array	30180Bl	3	7	10	6	13
14–16 mm, 6 x 12 Array	30182	3	4	6	6	8
17–20 mm, 4 x 10 Array	30184	3	5	7	6	8
21–25 mm, 4 x 10 Array	30186	2	3	5	4	6
26–30 mm, 3 x 8 Array	30188	3	4	6	5	8
1.5 ml Micro Centrifuge, 8 x 12 Array	30190	3	5	7	6	9

Table 16: Available Test Tube Racks for Solaris 2000 Platforms

For Solaris 4000 Platforms

	Art. No.	Universal		Dual Stack
		18 x 30	36 x 24	18 x 30
Half Size				
10–13 mm, Red, 6 x 6 Array	30181	21	32	40
14–16 mm, Orange, 6 x 6 Array	30183	14	20	26
17–20 mm, White, 4 x 5 Array	30185	18	20	34
21–25 mm, Blue, 4 x 4 Array	30187	14	22	25
26–30 mm, Green, 3 x 3 Array	30189	15	24	30
1.5 ml Micro Centrifuge, Blue, 4 x 6 Array	30191	18	24	34
Full Size				
10–13 mm, 6 x 12 Array	30180Bl	14	20	26
14–16 mm, 6 x 12 Array	30182	9	12	16
17–20 mm, 4 x 10 Array	30184	9	15	18
21–25 mm, 4 x 10 Array	30186	7	9	13
26–30 mm, 3 x 8 Array	30188	7	10	13
1.5 ml Micro Centrifuge, 8 x 12 Array	30190	9	12	17

Table 17: Available Test Tube Racks for Solaris 4000 Platforms

For Solaris 2000 I / 2000 R Platform

	Art. No.	Universal 11 x 14
Half Size		
10–13 mm, Red, 6 x 6 Array	30181	6
14–16 mm, Orange, 6 x 6 Array	30183	2
17–20 mm, White, 4 x 5 Array	30185	4
21–25 mm, Blue, 4 x 4 Array	30187	2
26–30 mm, Green, 3 x 3 Array	30189	4
Micro Centrifuge, 1.5 ml, Blue, 4 x 6 Array	30191	3
Full Size		
10–13 mm, 6 x 12 Array	30180BI	3
14–16 mm, 6 x 12 Array	30182	2
17–20 mm, 4 x 10 Array	30184	2
21–25 mm, 4 x 10 Array	30186	1
26–30 mm, 3 x 8 Array	30188	2
1.5 ml Micro Centrifuge, 8 x 12 Array	30190	2

Table 18: Available Test Tube Racks for Solaris 2000 I / 2000 R Platform

For Solaris 4000 I / 4000 R Platform

	Art. No.	Universal 18 x 18
Half Size		
10–13 mm, Red, 6 x 6 Array	30181	12
14–16 mm, Orange, 6 x 6 Array	30183	8
17–20 mm, White, 4 x 5 Array	30185	10
21–25 mm, Blue, 4 x 4 Array	30187	8
26–30 mm, Green, 3 x 3 Array	30189	9
Micro Centrifuge, 1.5 ml, Blue, 4 x 6 Array	30191	8
Full Size		
10–13 mm, 6 x 12 Array	30180BI	7
14–16 mm, 6 x 12 Array	30182	4
17–20 mm, 4 x 10 Array	30184	5
21–25 mm, 4 x 10 Array	30186	3
26–30 mm, 3 x 8 Array	30188	4
1.5 ml Micro Centrifuge, 8 x 12 Array	30190	5

Table 19: Available Test Tube Racks for Solaris 4000 I / 4000 R Platform

1. 2. 5. Adjustable Angle Test Tube Rack Holders

For Solaris 2000 Platforms

	Art. No.	Universal			Dual Stack	
		12 x 14	18 x 18	18 x 24	12 x 14	18 x 18
10-13 mm, 72 places	236090	3	4	6	6	8
16-20 mm, 40 places	236091	3	4	6	5	8
21-25 mm, 40 places	236092	3	3	4	5	6
26-30 mm, 24 places	236093	3	3	4	5	6

Table 20: Available Adjustable Angle Test Tube Rack Holders for Solaris 2000 Platforms

For Solaris 4000 Platforms

	Art. No.	Universal		Dual Stack
		18 x 30	36 x 24	18 x 30
10-13 mm, 72 places	236090	7	14	14
16-20 mm, 40 places	236091	7	14	14
21-25 mm, 40 places	236092	5	9	10
26-30 mm, 24 places	236093	6	9	12

Table 21: Available Adjustable Angle Test Tube Rack Holders for Solaris 4000 Platforms

For Solaris 2000 I / 2000 R Platform

	Art. No.	Universal
		11 x 14
10-13 mm, 72 places	236090	2
16-20 mm, 40 places	236091	2
21-25 mm, 40 places	236092	1
26-30 mm, 24 places	236093	1

Table 22: Available Adjustable Angle Test Tube Rack Holders for Solaris 2000 I / 2000 R Platform

For Solaris 4000 I / 4000 R Platform

	Art. No.	Universal
		18 x 18
10-13 mm, 72 places	236090	4
16-20 mm, 40 places	236091	3
21-25 mm, 40 places	236092	3
26-30 mm, 24 places	236093	3

Table 23: Available Adjustable Angle Test Tube Rack Holders for Solaris 4000 I / 4000 R Platform

1. 2. 6. Adjustable Vessel Clamps

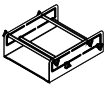

For Solaris 2000 Platforms

	Art. No.	Universal			Dual Stack	
		12 x 14	18 x 18	18 x 24	12 x 14	18 x 18
Single height adjustable vessel clamp 11"x14"	75004104	–	–	–	–	–
Dual height adjustable vessel clamp 12"x14"	75004102	1	1	1	–	2
Dual height adjustable vessel clamp 18"x18"	75004103	–	1	1	–	–
Single vessel adjustable clamp	75004101	4	4	6	6	8

Table 24: Available Adjustable Vessel Clamps for Solaris 2000 Platforms

For Solaris 4000 Platforms

	Art. No.	Universal		Dual Stack
		18 x 30	36 x 24	18 x 30
Single height adjustable vessel clamp 11"x14"	75004104	–	–	–
Dual height adjustable vessel clamp 12"x14"	75004102	2	2	4
Dual height adjustable vessel clamp 18"x18"	75004103	1	2	2
Single vessel adjustable clamp	75004101	8	12	16

Table 25: Adjustable Vessel Clamps for Solaris 4000 Platforms

For Solaris 2000 I / 2000 R Platform

	Art. No.	Universal
		11 x 14
Single height adjustable vessel clamp 11"x14"	75004104	1
Dual height adjustable vessel clamp 12"x14"	75004102	–
Dual height adjustable vessel clamp 18"x18"	75004103	–
Single vessel adjustable clamp	75004101	2

Table 26: Adjustable Vessel Clamps for Solaris 2000 I / 2000 R Platform

For Solaris 4000 I / 4000 R Platform

	Art. No.	Universal
		18 x 18
Single height adjustable vessel clamp 11"x14"	75004104	–
Dual height adjustable vessel clamp 12"x14"	75004102	1
Dual height adjustable vessel clamp 18"x18"	75004103	1
Single vessel adjustable clamp	75004101	4

Table 27: Adjustable Vessel Clamps for Solaris 4000 I / 4000 R Platform

1. 2. 7. Square Media Clamps

For Solaris 2000 Platforms

	Art. No.	Universal			Dual Stack	
		12 x 14	18 x 18	18 x 24	12 x 14	18 x 18
125 ml square bottle clamp	75004106	12	16	24	21	32
250 ml square bottle clamp	75004107	9	16	22	18	32
500 ml square bottle clamp	75004108	6	9	12	11	18
1 000 ml square bottle clamp	75004109	4	9	11	8	18

Table 28: Available Square Media Clamps for Solaris 2000 Platforms

For Solaris 4000 Platforms

	Art. No.	Universal		Dual Stack
		18 x 30	36 x 24	18 x 30
125 ml square bottle clamp	75004106	28	54	56
250 ml square bottle clamp	75004107	28	52	56
500 ml square bottle clamp	75004108	15	24	30
1 000 ml square bottle clamp	75004109	15	24	28

Table 29: Available Square Media Clamps for Solaris 4000 Platforms

For Solaris 2000 I / 2000 R Platform

	Art. No.	Universal
		11 x 14
125 ml square bottle clamp	75004106	9
250 ml square bottle clamp	75004107	7
500 ml square bottle clamp	75004108	3
1 000 ml square bottle clamp	75004109	2

Table 30: Available Square Media Clamps for Solaris 2000 I / 2000 R Platform

For Solaris 4000 I / 4000 R Platform

	Art. No.	Universal
		18 x 18
125 ml square bottle clamp	75004106	16
250 ml square bottle clamp	75004107	16
500 ml square bottle clamp	75004108	9
1 000 ml square bottle clamp	75004109	9

Table 31: Available Square Media Clamps for Solaris 4000 I / 4000 R Platform

1. 2. 8. Nalgene Beaker Racks

For Solaris 2000 Platforms

	Art. No.	Universal			Dual Stack	
		12 x 14	18 x 18	18 x 24	12 x 14	18 x 18
Size 11 x 14 / 12 x 14		**Racks / Places**				
Nalgene 30 ml beaker, 36 places	75004116	1 / 36	–	–	2 / 72	–
Nalgene 50 ml beaker, 28 places	75004129	1 / 28	–	–	2 / 56	–
Nalgene 100 ml beaker, 16 places	75004118	1 / 16	–	–	2 / 32	–
Nalgene 250 ml beaker, 9 places	75004119	1 / 9	–	–	2 / 18	–
Nalgene 400 ml beaker, 8 places	75004120	1 / 8	–	–	2 / 16	–
Nalgene 600 ml beaker, 5 places	75004121	1 / 5	–	–	2 / 10	–
Size 9 x 18		**Racks / Places**				
Nalgene 30 ml beaker, 32 places	75004110	–	2 / 64	2 / 64	–	4 / 128
Nalgene 50 ml beaker, 24 places	75004128	–	2 / 48	2 / 48	–	4 / 96
Nalgene 100 ml beaker, 15 places	75004112	–	2 / 30	2 / 30	–	4 / 60

	Art. No.	Universal			Dual Stack	
		12 x 14	18 x 18	18 x 24	12 x 14	18 x 18
Nalgene 250 ml beaker, 8 places	75004113	–	2 / 16	2 / 16	–	4 / 32
Nalgene 400 ml beaker, 6 places	75004114	–	2 / 12	2 / 12	–	4 / 24
Nalgene 600 ml beaker, 4 places	75004115	–	2 / 8	2 / 8	–	4 / 16

Table 32: Available Nalgene Beaker Racks for Solaris 2000 Platforms

For Solaris 4000 Platforms

	Art. No.	Universal		Dual Stack
		18 x 30	36 x 24	18 x 30
Size 11 x 14 / 12 x 14		**Racks / Places**		
Nalgene 30 ml beaker, 36 places	75004116	–	–	–
Nalgene 50 ml beaker, 28 places	75004129	–	–	–
Nalgene 100 ml beaker, 15 places	75004118	–	–	–
Nalgene 250 ml beaker, 9 places	75004119	–	–	–
Nalgene 400 ml beaker, 8 places	75004120	–	–	–
Nalgene 600 ml beaker, 5 places	75004121	–	–	–
Size 9 x 18		**Racks / Places**		
Nalgene 30 ml beaker, 32 places	75004110	3 / 96	4 / 128	6 / 192
Nalgene 50 ml beaker, 24 places	75004128	3 / 72	4 / 96	6 / 144
Nalgene 100 ml beaker, 15 places	75004112	3 / 45	4 / 60	6 / 90
Nalgene 250 ml beaker, 8 places	75004113	3 / 24	4 / 32	6 / 48
Nalgene 400 ml beaker, 6 places	75004114	3 / 18	4 / 24	6 / 36
Nalgene 600 ml beaker, 4 places	75004115	3 / 12	4 / 16	6 / 24

Table 33: Available Nalgene Beaker Racks for Solaris 4000 Platforms

For Solaris 2000 I / 2000 R Platform

	Art. No.	Universal 11 x 14
Size 11 x 14 / 12 x 14		**Racks / Places**
Nalgene 30 ml beaker, 36 places	75004116	1 / 36
Nalgene 50 ml beaker, 28 places	75004129	1 / 28
Nalgene 100 ml beaker, 16 places	75004118	1 / 16
Nalgene 250 ml beaker, 9 places	75004119	1 / 9
Nalgene 400 ml beaker, 8 places	75004120	1 / 8
Nalgene 600 ml beaker, 5 places	75004121	1 / 5
Size 9 x 18		**Racks / Places**
Nalgene 30 ml beaker, 32 places	75004110	–
Nalgene 50 ml beaker, 24 places	75004128	–
Nalgene 100 ml beaker, 15 places	75004112	–
Nalgene 250 ml beaker, 8 places	75004113	–
Nalgene 400 ml beaker, 6 places	75004114	–
Nalgene 600 ml beaker, 4 places	75004115	–

Table 34: Available Nalgene Beaker Racks for Solaris 2000 I / 2000 R Platform

For Solaris 4000 I / 4000 R Platform

	Art. No.	Universal 18 x 18
Size 11 x 14 / 12 x 14		**Racks / Places**
Nalgene 30 ml beaker, 36 places	75004116	–
Nalgene 50 ml beaker, 28 places	75004129	–
Nalgene 100 ml beaker, 16 places	75004118	–
Nalgene 250 ml beaker, 9 places	75004119	–
Nalgene 400 ml beaker, 8 places	75004120	–
Nalgene 600 ml beaker, 5 places	75004121	–
Size 9 x 18		**Racks / Places**
Nalgene 30 ml beaker, 32 places	75004110	2 / 64
Nalgene 50 ml beaker, 24 places	75004128	2 / 48
Nalgene 100 ml beaker, 15 places	75004112	2 / 30
Nalgene 250 ml beaker, 8 places	75004113	2 / 16
Nalgene 400 ml beaker, 6 places	75004114	2 / 12
Nalgene 600 ml beaker, 4 places	75004115	2 / 8

Table 35: Available Nalgene Beaker Racks for Solaris 4000 I / 4000 R Platform

1. 2. 9. Separatory Funnel Clamp

For Solaris 2000 Platforms

	Art. No.	Universal			Dual Stack	
		12 x 14	18 x 18	18 x 24	12 x 14	18 x 18
Single clamp for separatory funnel, 250 ml to 2000 ml	75004125	2	3	4	2	5
Separatory funnel clamp vertically mounted		4	4	6	–	–

Table 36: Available Separatory Funnel Clamps for Solaris 2000 Platforms

For Solaris 4000 Platforms

	Art. No.	Universal		Dual Stack
		18 x 30	36 x 24	18 x 30
Single clamp for separatory funnel, 250 ml to 2000 ml	75004125	5	7	9
Separatory funnel clamp vertically mounted		8	12	–

Table 37: Available Separatory Funnel Clamps for Solaris 4000 Platforms

For Solaris 2000 I / 2000 R Platform

	Art. No.	Universal
		11 x 14
Single clamp for separatory funnel, 250 ml to 2000 ml	75004125	–
Separatory funnel clamp vertically mounted		–

Table 38: Available Separatory Funnel Clamps for Solaris 2000 I / 2000 R Platform

For Solaris 4000 I / 4000 R Platform

	Art. No.	Universal
		18 x 18
Single clamp for separatory funnel, 250 ml to 2000 ml	75004125	–
Separatory funnel clamp vertically mounted		–

Table 39: Available Separatory Funnel Clamps for Solaris 4000 I / 4000 R Platform

1. 2. 10. Utility Tray

For Solaris 2000 Platforms

	Art. No.	Universal			Dual Stack	
		12 x 14	18 x 18	18 x 24	12 x 14	18 x 18
11 x 14 / 12 x 14 Utility tray	75004123	1	–	–	2	–
9 x 18 Utility tray	75004122	–	2	3	–	4

Table 40: Available Utility Trays for Solaris 2000 Platforms

For Solaris 4000 Platforms

	Art. No.	Universal		Dual Stack
		18 x 30	36 x 24	18 x 30
11 x 14 / 12 x 14 Utility tray	75004123	–	–	–
9 x 18 Utility tray	75004122	3	6	6

Table 41: Available Utility Trays for Solaris 4000 Platforms

For Solaris 2000 I / 2000 R Platform

	Art. No.	Universal
		11 x 14
11 x 14 / 12 x 14 Utility tray	75004123	1
9 x 18 Utility tray	75004122	–

Table 42: Available Utility Trays for Solaris 2000 I / 2000 R Platform

For Solaris 4000 I / 4000 R Platform

	Art. No.	Universal
		18 x 18
11 x 14 / 12 x 14 Utility tray	75004123	–
9 x 18 Utility tray	75004122	2

Table 43: Available Utility Trays for Solaris 4000 I / 4000 R Platform

Utility Tray Accessories

	Art. No.	Universal
Spare set of O-rings (utility tray)	75004132	–

Table 44: Available Utility Trays Accessories

1. 2. 11. Adhesive Mats

General notes on the choice of adhesive mats:

- The 170 x 280 mm mat size is optimized for 11 x 14 and 12 x 14 platforms.
- The 200 x 200 mm mat size is optimized for larger 18 x 18, 18 x 24, 30 x 18 and 36 x 24 size platforms.
- All mats may be cut to any desired size.

For Solaris 2000 Platforms

	Art. No.	Universal			Dual Stack Universal	
		12 x 14	18 x 18	18 x 24	12 x 14	18 x 18
200 x 200 mm High-Adhesion Mat, pack of 2	75004126	1	4	6	2	8
280 x 170 mm High-Adhesion Mat, pack of 2	75004127	2	2	4	4	4
200 x 200 mm Low-Adhesion Mat, pack of 2	75004111	1	4	6	2	8
280 x 170 mm Low-Adhesion Mat, pack of 2	75004117	2	2	4	4	4

Mats are sold as pack of 2. Numbers of mats fitting on a platform are not related to this pack size but to a single mat.

Table 45: Available Adhesive Mats for Solaris 2000 Platforms

For Solaris 4000 Platforms

	Art. No.	Universal		Dual Stack
		18 x 30	36 x 24	18 x 30
200 x 200 mm High-Adhesion Mat, pack of 2	75004126	6	12	12
280 x 170 mm High-Adhesion Mat, pack of 2	75004127	6	9	12
200 x 200 mm Low-Adhesion Mat, pack of 2	75004111	6	12	12
280 x 170 mm Low-Adhesion Mat, pack of 2	75004117	6	9	12

Mats are sold as pack of 2. Numbers of mats fitting on a platform are not related to this pack size but to a single mat.

Table 46: Available Adhesive Mats for Solaris 4000 Platforms

For Solaris 2000 I / 2000 R Platform

	Art. No.	Universal
		11 x 14
200 x 200 mm High-Adhesion Mat, pack of 2	75004126	1
280 x 170 mm High-Adhesion Mat, pack of 2	75004127	2
200 x 200 mm Low-Adhesion Mat, pack of 2	75004111	1
280 x 170 mm Low-Adhesion Mat, pack of 2	75004117	2

Mats are sold as pack of 2. Numbers of mats fitting on a platform are not related to this pack size but to a single mat.

Table 47: Available Adhesive Mats for Solaris 2000 I / 2000 R Platform

For Solaris 4000 I / 4000 R Platform

	Art. No.	Universal 18 x 18
200 x 200 mm High-Adhesion Mat, pack of 2	75004126	4
280 x 170 mm High-Adhesion Mat, pack of 2	75004127	2
200 x 200 mm Low-Adhesion Mat, pack of 2	75004111	4
280 x 170 mm Low-Adhesion Mat, pack of 2	75004117	2

Mats are sold as pack of 2. Numbers of mats fitting on a platform are not related to this pack size but to a single mat.

Table 48: Available Adhesive Mats for Solaris 4000 I / 4000 R Platform

1. 2. 12. General Accessories

	Art. No.
Adhesive mat rolling applicator	75004124
Screwdriver for accessories	75004131
Gassing Manifold (Solaris 2000 I / 2000 R)	SK2000-8GM
Gassing Manifold (Solaris 4000 I / 4000 R)	SK4000-8GM
Clamp Spare Kit (Screws)	SK0010
Platform Spare Kit for Solaris 2000, 2000 I/R and 4000 I/R (Platform Screws, Tool)	SK0100
Platform Spare Kit for SK4000 (Platform Screws, Tool)	SK0101

Table 49: Available General Accessories

1. 3. Directives and Standards

Region	Directive	Standards
Europe	2006/42/EC Machinery Directive 2011/65/EU RoHS Directive on the Restriction of the use of certain Hazardous Substances in electrical and electronic equipment Protective Goals: 2014/35/EU Low Voltage 2014/30/EC Electromagnetic Compatibility (EMC)	EN 61010-1 IEC 61010-2-051 EN 61326-1 Class B EN ISO 14971 EN ISO 9001 Only for Solaris 2000 I / 2000 R / 4000 I / 4000 R: IEC 61010-2-010
North America		ANSI/UL 61010-1 IEC 61010-2-051 IEC 61326-1 Class B CFR 47 FCC 15 EMC EN ISO 14971 EN ISO 9001 Only for Solaris 2000 I / 2000 R / 4000 I / 4000 R: IEC 61010-2-010
Japan		IEC 61010-1 IEC 61010-2-051 IEC 61326-1 Class B EN ISO 14971 EN ISO 9001 Only for Solaris 2000 I / 2000 R / 4000 I / 4000 R: IEC 61010-2-010

Table 50: Directives and Standards

NOTE: This equipment has been tested and found to comply with the limits for a Class A digital device, pursuant to part 15 of the FCC Rules. These limits are designed to provide reasonable protection against harmful interference when the equipment is operated in a commercial environment. This equipment generates, uses, and can radiate radio frequency energy and, if not installed and used in accordance with the instruction manual, may cause harmful interference to radio communications. Operation of this equipment in a residential area is likely to cause harmful interference in which case the user will be required to correct the interference at his own expense.

1. 4. Product Overview

1. 4. 1. Solaris 2000

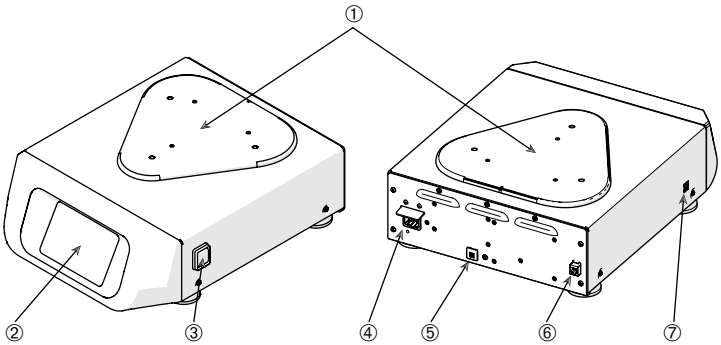

① Platform Mounting Plate; ② Graphical User Interface (GUI); ③ Power Supply Switch; ④ Mains Connection; ⑤ Fuse; ⑥ Ethernet Port; ⑦ USB Port

Figure 1: Overview Solaris 2000

1. 4. 2. Solaris 4000

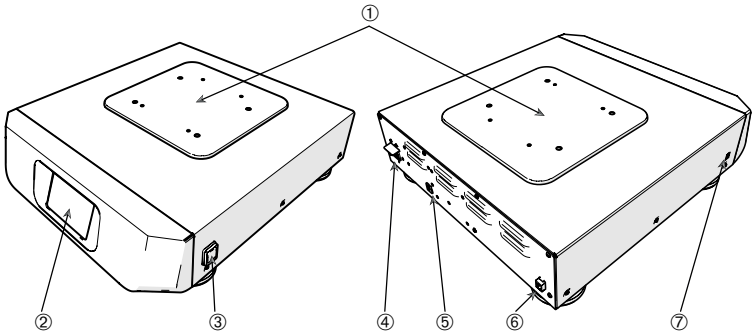

① Platform Mounting Plate; ② Graphical User Interface (GUI); ③ Power Supply Switch; ④ Mains Connection; ⑤ Fuse (resettable); ⑥ Ethernet Port; ⑦ USB Port

Figure 2: Overview Solaris 4000

1. 4. 3. Solaris 2000 I / 2000 R

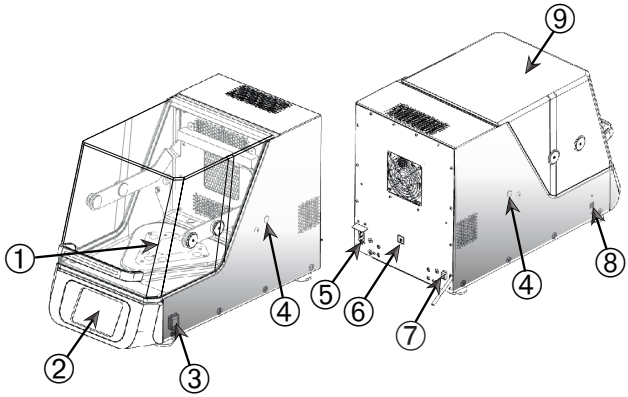

① Platform Mounting Plate; ② Graphical User Interface (GUI); ③ Power Supply Switch; ④ Access Port; ⑤ Mains Connection; ⑥ Fuse (resettable); ⑦ Ethernet Port; ⑧ USB Port; ⑨ Hood

Figure 3: Solaris 2000 I / 2000 R Overview

1. 4. 4. Solaris 4000 I / 4000 R

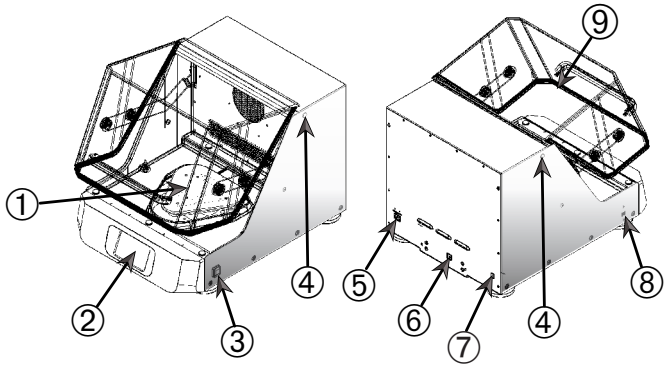

① Platform Mounting Plate; ② Graphical User Interface (GUI); ③ Power Supply Switch; ④ Access Port; ⑤ Mains Connection; ⑥ Fuse (resettable); ⑦ Ethernet Port; ⑧ USB Port; ⑨ Hood

Figure 4: Solaris 4000 I / 4000 R Overview

1. 4. 5. Connections

Open Air Shakers

① Mains Connection; ② Fuse; ③ Ethernet Port

Figure 5: Rear View (left: Solaris 4000, right: Solaris 2000)

Incubated and Refrigerated Shakers

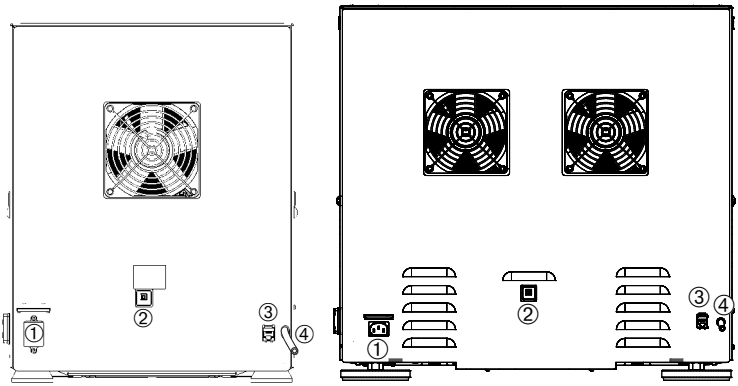

① Mains Connection; ② Fuse; ③ Ethernet Port; ④ Drain Tube

Figure 6: Rear View (left: Solaris 2000 I / 2000 R, right: Solaris 4000 I / 4000 R)

Mains Connection

The shaker requires a power source that meets its specifications. Power supply cables are supplied.

Art. No.	Shaker	Specification
SK2000	Solaris 2000	100–240 V ±10 %, 50 / 60 Hz
SK4000	Solaris 4000	100–240 V ±10 %, 50 / 60 Hz
SK2001	Solaris 2000 I	100–120, 200–240 V ±10 %, 50 / 60 Hz
SK4001	Solaris 4000 I	100–120, 200–240 V ±10 %, 50 / 60 Hz
SK2002	Solaris 2000 R	100–240 V ±10 %, 50 / 60 Hz
SK4002	Solaris 4000 R	100–240 V ±10 %, 50 / 60 Hz

Figure 7: Power supply specifications for shakers

WARNING Damage from inappropriate mains supply or power supply plug. Make sure that the shaker is plugged only into sockets that are properly grounded according to valid electrical safety standards. Do not operate the shaker with a damaged or an inadequately rated power supply cable.

The mains plug must be freely accessible at all times.

To eliminate the hazard of electrical shock, make sure the surface around the shaker is dry. In the event of accidental spilling or splashing of liquids, disconnect the shaker from the power source, clean up the spilled liquids and eliminate any health or biological hazard before continuing.

Disconnect the shaker from the power source while it is not in use.

Fuse

The fuse can be reset when it has tripped due to an overcurrent condition. The shaker will not be operative until you push the fuse back to its proper position.

Ethernet

The shaker has an RJ45 Ethernet port, which can be used to connect to a Local Area Network (LAN). Use only equipment conforming to the IEC 60950-1 standard with the RJ45 Ethernet port. The RJ45 Ethernet port is prepared for future use when an appropriate update of the software will be available.

Access Ports

Temperature-contolled shaker models have two lateral orifices referred to as access ports. These access ports are usually sealed with caps. You can remove the cap and introduce additional instrumentation, such as an extra temperature sensor, or feed through cables or tubing, such as the tubes of the Gassing Manifold.

USB

The shaker has two USB-A 2.0 ports, which can be used with a commercially available USB drive. Use only equipment conforming with the IEC 60950-1 standard with the USB ports.

Internal Overheating Protection

Temperature-contolled shaker models have a manual reset thermostat installed next to the heating elements. This thermal device shuts off the heaters to prevent excessively high temperatures inside the shaker cabinet in case the air circulating fans should fail.

The manual reset thermostat requires manual resetting in order to restore shaker operation. This can only be done by Thermo Fisher Scientific customer service.

2. Transport and Set Up

It is your responsibility to make sure that the shaker is set up properly.

NOTICE

The shipping carton should be inspected upon delivery. When received, carefully examine for any shipping damage before unpacking. If damage is discovered, the delivering carrier should specify and sign for the damage on your copy of the delivery receipt.

Open the carton carefully making certain that all parts ("Table 51: Items Supplied") are accounted for before packaging materials are discarded. After unpacking, if damage is found, report it to the carrier and request a damage inspection.

Important: Failure to request an inspection of damage within a few days after receipt of shipment absolves the carrier from any liability for damage. You must call for a damage inspection.

2. 1. Unpacking

Use the packing list when unpacking to verify that the complete unit has been received. Do not discard packing materials until all is accounted for.

Items Supplied

Item	Quantity
Shaker	1
Power Supply Cable	1
Universal Platform	1*
Screws for Platform - Solaris 4000 - other models	 4* 3*
Printed Manual in English	1
Manuals on USB	1
Locking tool (T-handle wrench)	1
* The 2000 I, 2000 R, 4000 I and 4000 I shakers come with the platform pre-installed in the shaker. Neither the platform nor the screws exist as detached parts.	

Table 51: Items Supplied

If any items are missing, contact Thermo Fisher Scientific.

2. 2. Location

CAUTION Protection can be impaired due to reduced stability of plastic exposed to ultraviolet rays. Do not subject the shaker and plastic accessories to direct sunlight or other sources of ultraviolet rays.

Put the shaker on a level table or bench capable of supporting the weight of the shaker with any accessories and samples while in operation. Place the shaker near an electrical outlet that matches the nameplate requirements. Allow clearance around the unit for free air convection, accessory attachments and user convenience.

Mind the following requirements for setting up the unit:

- To ensure sufficient clearance for moving parts and avoid squeezing injuries or damage to adjacent equipment, the open air shaker requires a clear area of 8 cm (3 in) on all four sides of the platform. The platform of the open air shaker may overlap the casing.
- Shaker cause vibrations. Do not store sensitive devices or dangerous objects or substances in the safety zone.

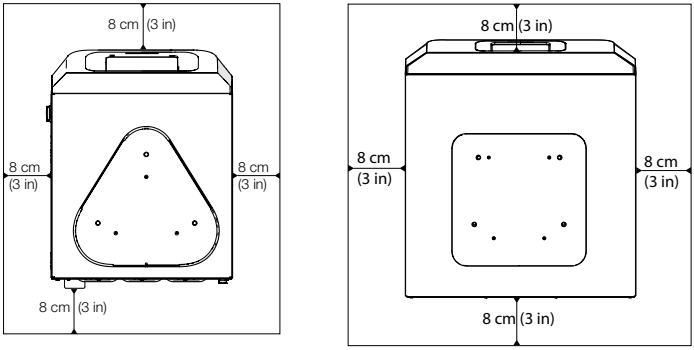

Figure 8: Set Up with Clearance of 8 cm (3 in) for Open Air Shaker

To ensure proper ventilation and optimum performance, the following spacing requirements must be met for temperature controlled shakers:

- Solaris 2000 I and 4000 I incubated shakers require a clear area of 8 cm (3 in) on all four sides of the casing, as shown on the left side of Figure 9.
- Solaris 2000 R and 4000 R refrigerated shakers may be operated with a clear area of 8 cm (3 in) on all four sides of the casing if there is **free air space** above their hood, as shown on the left side of Figure 9.
- If the **air space above** the Solaris 2000 R and 4000 R refrigerated shaker **is obstructed**, the clearance around the casing must be

increased to 30 cm (12 in) on all four sides, as shown on the right side of Figure 9.

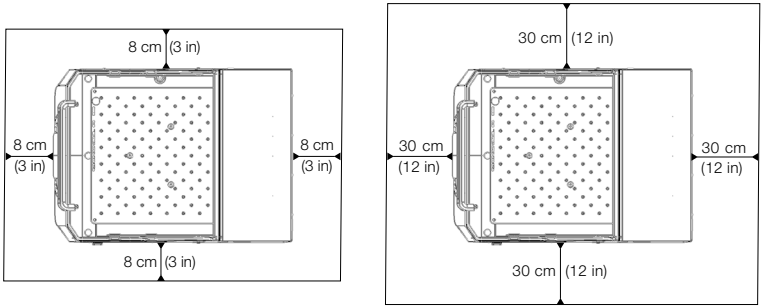

Figure 9: Set Up Clearances for Incubated (left) and Refrigerated Shakers (right); refrigerated with free air above are covered by the left image.

WARNING Hazardous substances must be kept out of this zone while shaking.

The supporting surface must:

» be clean,
» be stable, solid, rigid and free of resonance,
» be suitable for horizontal set up of the shaker,
» hold the weight of the shaker.

- The shaker is to be operated only indoors.
- The shaker is not to be exposed to heat and strong sunlight.
- The set up location must be well ventilated at all times.
- The mains plug must be freely accessible at all times.

2. 3. Transporting

CAUTION Physical harm caused by dropping the shaker. Always lift the shaker from both sides. Never lift the shaker by its front panel or an installed platform. Never lift a temperature controlled shaker by the handle of the transparent hood.

CAUTION Safe use of the shaker is impaired by water condensing inside the casing. This occurs when the shaker is moved from a cooler to a warmer location with more humid air—for example, from a storage area or from the haulage truck to the lab room. Let the equipment dry out for at least 2 h before operating.

NOTICE With open air shaker models, always remove the platform, its load and all accessories before moving the shaker. If you do not remove the platform, you might damage the platform mounting plate or the shaking mechanism. With temperature controlled shakers, it suffices to remove the load from the platform.

NOTICE Risk of impact damage to the unit. Transport the shaker in an upright position and, if possible, in its original packaging.

Handling the Shaker

When handling the shaker make sure that:

- you lift the shaker from both sides, but never from the front and back
- you assign as many persons for carrying as dictated by the weight of the shaker (please refer to "Technical Specifications" on page 12) but never less than two people

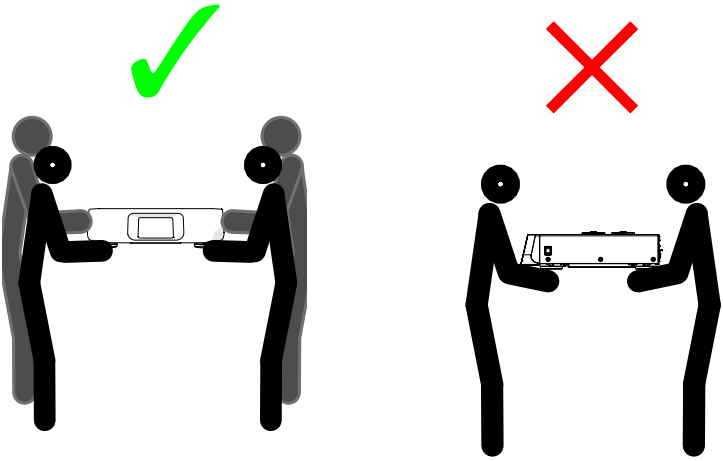

Figure 10: How to carry a shaker

WARNING Always lift the shaker from both sides. Never lift the shaker from the front or back sides. The shakers are heavy (please refer to "Technical Specifications" on page 12). Assign a minimum of two persons to lift and carry a shaker.

CAUTION Never grasp and carry a temperature controlled shaker by the handle of the transparent hood. The handle may break and the shaker may fall to the ground, inflicting serious injury to persons.

2. 4. Leveling

The shaker cannot be leveled by itself. The shaker requires a leveled supporting surface for proper setup.

NOTICE Do not put any shims or other flat objects between the shaker feet and the supporting surface to level the shaker.

2. 5. Mains Connection

The shaker requires a power source that meets its specifications. Power supply cables are supplied. Check Figure 7 on page 47 for details.

WARNING Damage from wrong mains supply or power supply plug. Make sure that the shaker is plugged only into sockets which have been properly grounded. Do not operate the shaker with a damaged or an inadequately rated power supply cable.

NOTICE Electromagnetic radiation may cause interference on the display. This will not damage, restrict the function of or alter the device. To avoid interference from electromagnetic radiation, do not bring mobile devices, such as cell phones, into the direct vicinity of the device. Do not operate the device with other devices of high electrical power on a common circuit. Do not operate multiple devices on a common power strip.

To connect the shaker to the power supply follow this procedure:

1. Turn off the power supply switch located on the right side.
2. Make sure that the cable specification agrees with the safety standards of your country.

3. Make sure that the voltage and frequency are the same as the figures on the rating plate.

The mains plug must be freely accessible at all times.

To eliminate hazard of electrical shock, make sure the surface around the shaker is dry. In the event of accidental spilling or splashing of liquids, disconnect the shaker from the power source and clean up the spilled liquids before continuing.

Disconnect the shaker from the power source when not in use.

2. 6. Initial Startup

Complete the following steps before using the unit:

1. Power on the unit, the thermo scientific logo is displayed. Tap **Start Setup**.

Figure 11: Initial startup prompt

2. Select the desired language on the Language screen. Tap **Next**.

Figure 12: Initial startup - language

3. If desired, you can enter the unit name in the Unit Name dialog box. Tap **Next**.

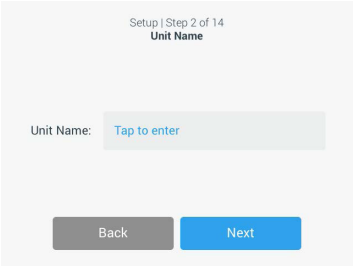

Figure 13: Initial startup - unit name

4. If desired, you can enter city and country in the text field. As soon as you have typed three characters, a list of matching suggestions appears in the City and Country text field. If desired, you may select one, then tap **Next**.

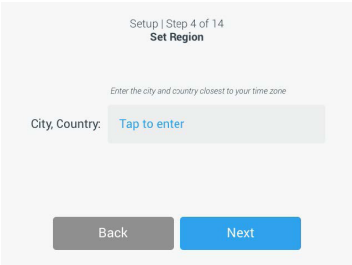

Figure 14: Initial startup - region

5. Select the desired date format. Tap **Next**.

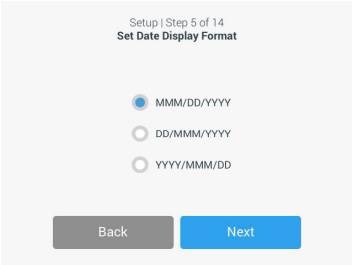

Figure 15: Initial startup - set date display format

6. Spin each dial of the wheel picker to select the current date. Tap **Next.**

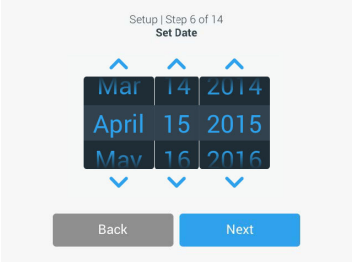

Figure 16: Initial startup - set date

7. Select the desired time format and spin each dial of the wheel picker to set the current time. Tap **Next**.

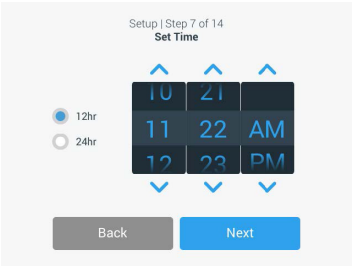

Figure 17: Initial startup - set time

8. **Incubated and refrigerated shakers only:** Select the desired temperature unit. Tap **Next**.

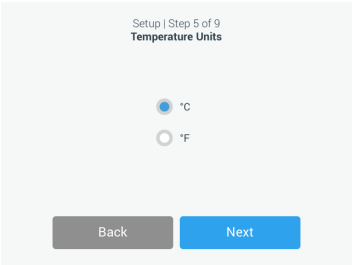

Figure 18: Initial startup - choose temperature unit

9. **Incubated and refrigerated shakers only:** Click the blue arrow to set the high temperature alarm and emergency shutdown thresholds. Tap **Next.**

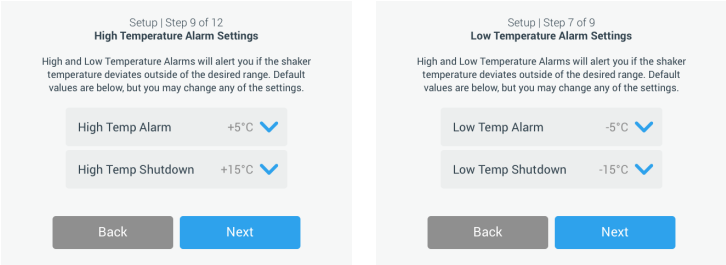

Figure 19: Initial startup - set high and low temperature alarm thresholds

10. Repeat the process for the low temperature alarm thresholds. Tap **Next** to continue.

11. If you wish to continue without setting an administrator passcode, leave **Open Mode** selected and tap **Next** to continue.

If you wish to set an administrator passcode now, tap **Secure Mode**.

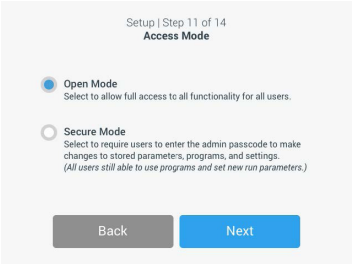

Figure 20: Initial Startup - Choose Access Mode

12. In the passcode prompt that appears, enter an admin passcode using the keypad and tap **Next**.

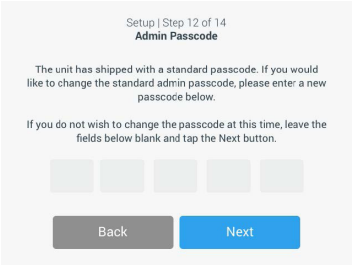

Figure 21: Initial Startup - Choose Access Mode

13. In the next passcode prompt that appears, enter your admin passcode.
14. In the third passcode prompt that appears, re-enter the admin passcode one more time to confirm.

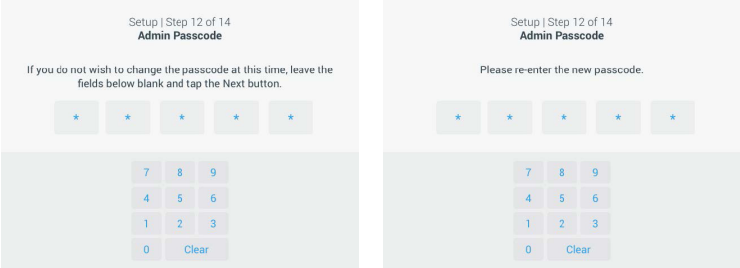

Figure 22: Initial Startup - Enter New Administrator Passcode and Confirm

15. In the confirmation screen that appears, tap **Next** to continue.

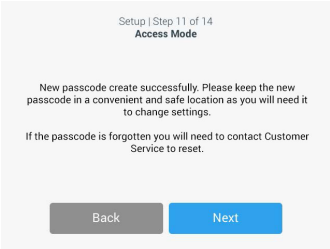

Figure 23: Initial Startup - Administrator Passcode Change Confirmation

16. A screen with general physical installation intructions for the shaker is displayed. Tap **Next**.

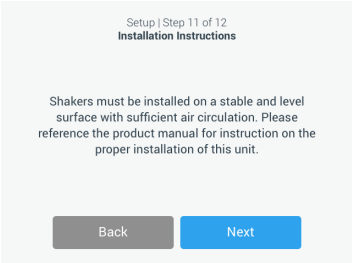

Figure 24: Initial startup - installation instruction

17. The Setup Complete window is displayed. Tap **Next** to finish.

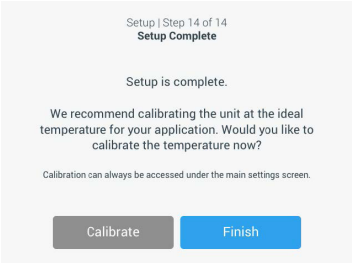

Figure 25: Initial startup - calibrate or finish setup

NOTICE On incubated and refrigerated shakers, you may tap **Calibrate** and run the procedure explained in the chapter "4. 6. Temperature Calibration" on page 128.

2. 7. Storage

CAUTION

When you remove the shaker and accessories from use, clean and, if necessary, disinfect or decontaminate the full system. Do not leave the shaker and accessories in an undefined state of contamination. If you are unsure of the process contact the Thermo Fisher Scientific customer service ("Cleaning" on page 125, "Disinfection" on page 126 and "Decontamination" on page 126).

- Before storing the shaker and the accessories, it must be cleaned and, if necessary, disinfected and decontaminated.
- Shaker and accessories must be completely dry before storage.
- Keep the shaker in a clean, dust-free location.
- Keep the shaker on its feet.
- Do not store the shaker in direct sunlight.

2. 8. Shipping

CAUTION

Before shipping the shaker and accessories you must clean and, if necessary, disinfect or decontaminate the full system. Do not leave the shaker and accessories in an undefined state of contamination. If you are unsure of the process contact the Thermo Fisher Scientific customer service ("Cleaning" on page 125, "Disinfection" on page 126 and "Decontamination" on page 126).

Before shipping the shaker:

- The shaker must be clean and decontaminated.
- You must confirm the decontamination with a decontamination certificate. A decontamination certificate can be retrieved from the Thermo Fisher Scientific customer service.

3. Operation

3. 1. Power on / off

Push the power switch at the right side to power the shaker on (I) or off (0).

The touchscreen shows the Thermo Scientific logo while booting.

When ready, the touchscreen shows the current status of the shaker.

3. 2. Graphical User Interface

The Home Screen is the default screen of the shaker's Graphical User Interface (GUI). It is your starting point for operating the shaker.

On the Home Screen, you can:

- set basic operating parameters such as shaking speed, time and temperature (temperature-controlled models only)
- start and stop the shaker
- view status information and handle alarms and alerts
- navigate to other screens with status information and setup options

The screen content differs slightly between the open air and temperature controlled versions.

The Home Screen for an open air shaker looks like the example shown in Figure 26.

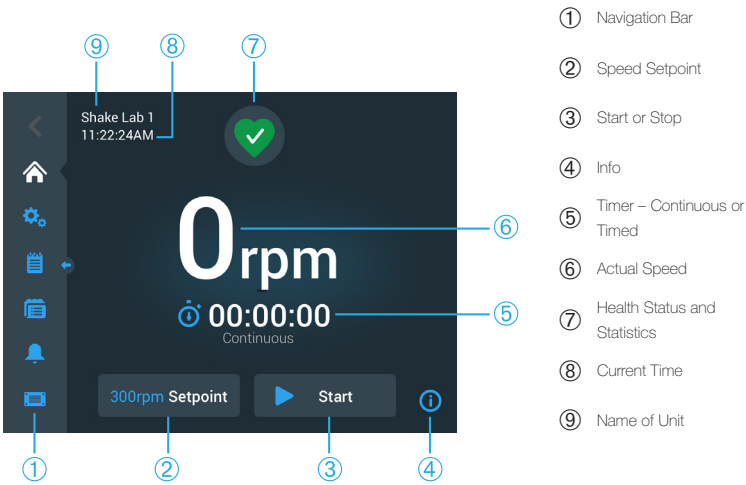

Figure 26: GUI Home Screen for Open Air Shaker

The Home Screen for a temperature controlled shaker has additional temperature controls, as shown in Figure 27.

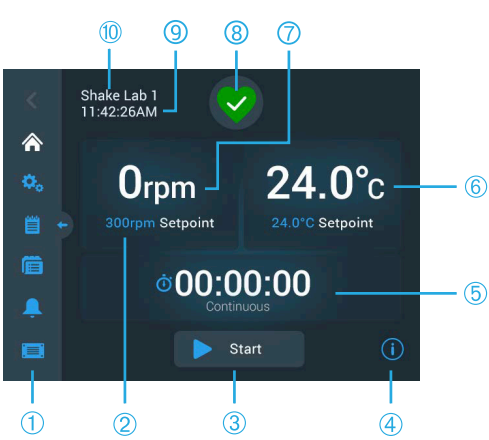

① Navigation Bar
② Speed Setpoint
③ Start or Stop
④ Info
⑤ Timer – Continuous or Timed
⑥ Temperature Readout and Setpoint
⑦ Actual Speed
⑧ Health Status and Statistics
⑨ Current Time
⑩ Name of Unit

Figure 27: GUI Home Screen for Temperature Controlled Shaker

3. 2. 1. Set Basic Shaker Operating Parameters

From the Home Screen you need only tap once to reach the setup screens for major shaker operating parameters.

Set Speed

1. Tap anywhere on the **Actual Speed** field (⑥ in Figure 26 or ⑦ Figure 27) to open the **Speed Setpoint** screen shown in Figure 28.

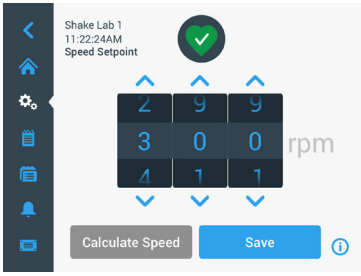

Figure 28: Speed setpoint

2. Tap the arrows above or below each dial of the wheel picker to set the desired speed. Alternatively, you can change the desired set speed by rotating each dial of the wheel picker independently.
3. Tap **Save**.

NOTICE If a pop up screen appears informing you that the speed setpoint is out of range, your setting is outside of the shaker's supported range of operating speeds, as specified in the chapter "Technical Data" on page 12. Correct your setting and continue.

4. Acknowledge the **Your Settings have been saved** confirmation dialog that appears to return to the main screen.

Orbit Calculator: Calculate Approximate Speed from Legacy Equipment Settings

From within the Speed Setpoint dialog, you can also tap **Calculate Speed** to open the **Orbit Calculator:** The orbit calculator is useful when you transition from a shaker of a different mechanical design to any of the Solaris series shakers described in this manual. This calculator uses the difference in orbit size to give you a rough estimate of the set speed needed to obtain similar results.

NOTICE Do not use the result obtained with the Orbit Calculator "as is" for your production samples, but run a series of tests to confirm. Cells may grow faster or slower, express different proteins, or be damaged (or die) depending on the shear stresses as the physics change when you move to a different orbit.

1. Select the unit of measurement in millimeters or inches.

Figure 29: Orbit calculator

2. Select the size of the previous orbit. Tap **Calculate**. The following window appears while calculating speed.

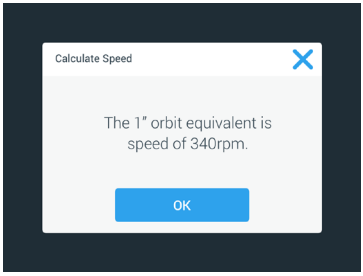

Figure 30: Orbit calculated

3. Tap **OK**.
4. You can calculate the suggested speed for a custom size of orbit. To calculate for a custom orbit, select Other**.**
5. Enter the size of the orbit.

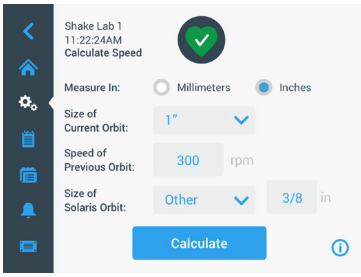

Figure 31: Calculate custom sized orbit

6. Tap **Calculate**.

   The Calculate Speed window appears, displaying the speed for the size you have just entered.

Set Runtime

You can run the shaker in Continuous or Timed mode. In Continuous mode, you stop the shaker manually at your discretion. In Timed mode, the drive of the shaker stops automatically when the timer expires. You may choose to display the timer as follows:

- elapsed time: how long the shaker has been running since you have pressed the Start button, or
- remaining time: how long the shaker will keep running until the timer expires

1. Tap the **Time** field (⑤ in Figure 26 and Figure 27) to open the Time Mode screen shown in Figure 32.

2. Choose **Timed**.

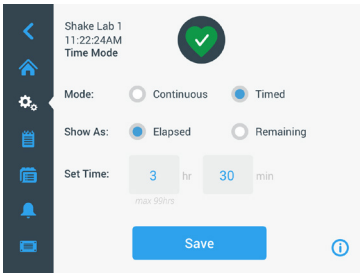

Figure 32: Select Time Mode

3. Enter the hours and minutes in the **Set Time** boxes.
4. Tap **Save**.
5. To return to the main screen, acknowledge the **Your Settings have been saved** confirmation dialog that appears.

Set Temperature

On temperature controlled models, the **Temp Setpoint** field allows you to set a temperature for your application at any time.

1. Tap anywhere on the **Temp Setpoint** field (bottom section of item ⑥ in Figure 27) to open the **Temp Setpoint** screen shown in Figure 33.
2. Tap the arrows above or below each dial of the wheel picker to pre-set the default temperature you wish the shaker to maintain. Alternatively, you can change the desired temperature by rotating each dial of the wheel picker independently.

Figure 33: Set Temp Setpoint: Screen with Calibration Readout

3. Tap **Save**.

NOTICE If a pop up screen appears informing you that the temperature setpoint is out of range, your setting is outside of the shaker's supported range of operating temperatures, as specified in the chapter "Technical Data" on page 12. Correct your setting and continue.

NOTICE If a pop up screen appears informing you that the selected temperature may be out of range due to the current ambient temperature, the ambient temperature is outside of the shaker's operating temperature range, as specified in the chapter "Technical Data" on page 12. Tap **OK** to confirm that you have been notified and proceed, or select a different temperature.

NOTICE The **Temp Setpoint** screen presents a readout of the calibrated temperature and offset adjusted during calibration, as shown in the lower left section of Figure 33. The calibration process is described in "Temperature Calibration" on page 128.

4. To return to the main screen, acknowledge the **Your Settings have been saved** confirmation dialog that appears.

NOTICE Temperature controlled shaker have a specific behavior when achieving the set temperature called temperature overshoot. Temperature overshoot means that the set chamber temperature will first be overdriven to a slightly higher (or lower) temperature and then approaching the set temperature. While approaching the set temperature the touchscreen will not show this overshooting behavior. Instead it will show the rising (or falling) of the chamber temperature until reaching the set temperature.

Start and Stop the Shaker

1. To start the shaker, tap the **Start** button.

   The **Start** button turns into the **Stop** button.

Figure 34: Start and Stop Button

2. To stop the shaker, tap the **Stop** button.

3. 2. 2. Status

When the shaker is in good health, the touchscreen display shows a green heart icon in the Health Status and Statistics area (⑧ in Figure 26 and Figure 27). Tapping the green heart icon opens the status screen. The status screen provides operating statistics information on your shaker, including hours shaking and hours powered in total and for the last session. Temperature controlled shakers display the hours spent cooling or heating in addition.

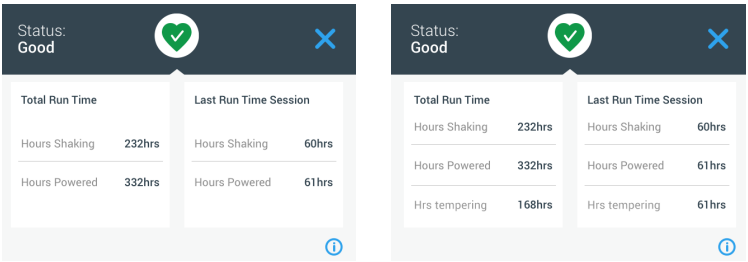

Figure 35: Shaker Statistics: Open Air Shaker (left) and Temperature Controlled Shaker (right)

Alert

When an alert is issued, the touchscreen display shows a yellow newsticker-type bar on top of the current screen. Additionally, an audible alarm tone is sounding. The yellow newsticker-type alert bar goes away after scrolling its message twice. Only the yellow triangle indicates that one or more alerts exist for the shaker. The triangle icon has a blue circle with a white border that shows how many active alerts exist. Tapping the triangle icon in the Info & Health Status area (⑦ in Figure 26 and ⑧ Figure 27) opens a screen listing all alerts that are currently active. The latest alert appears expanded to let you view the full details, as shown in Figure 36. You can scroll through the list and tap on any list item to expand it and read more.

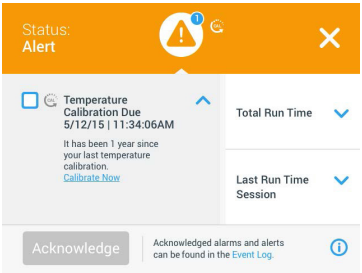

Figure 36: List of Alerts

You can select the active alert by tapping on the checkbox beside the alert item. Tapping the **Acknowledge** button will try to clear the Alert from the list. When all Alerts have been cleared the Status icon switches back to the default green heart.

Alarm

When an alarm is issued, the shaker stops immediately to avoid damage to the samples and/or the unit itself. You must acknowledge the alarm on the touchscreen before you can continue operation.

When an alarm is issued, the touchscreen display shows a red bar on top of the current screen. The Info & Health Status area (⑦ in Figure 26 and ⑧ Figure 27) displays a red alarm bell enclosed by sound waves. Additionally, an audible alarm tone constantly sounds.

Beneath the red alarm bar, a newsticker shows a scrolling summary of the current alarm. A Snooze button appears on the right side, allowing you to temporarily mute the alarm. When the alarm condition is not cleared within the snooze period, the audible alarm returns. The duration of the snooze period can be chosen in the settings, as explained in the section "Alarms and Alerts" on page 71.

Tapping the bell icon in the Info & Health Status area (⑧ in Figure 26 and Figure 27) opens a screen that presents the full details of the currently active alarm, as shown in Figure 37. You can scroll through the list and tap on any list item to expand it and read more.

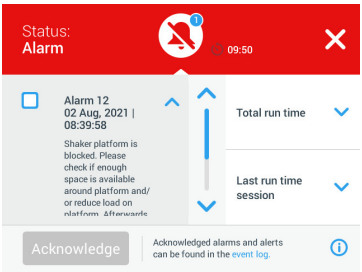

Figure 37: List of Alarms

You can select the active alarm by tapping on the checkbox beside the alarm item. Tapping the **Acknowledge** button will try to clear the alarm from the list if the root cause has been cleared. When all alarms have been cleared the Status icon switches back to the default green heart.

Error

When a malfunction occurs, the shaker displays an error message and stops immediately to avoid damage to the samples and/or the unit itself. The screen turns all red and no further interaction is possible. An error message is shown together with an Error Code, as can be seen in the example in Figure 38.

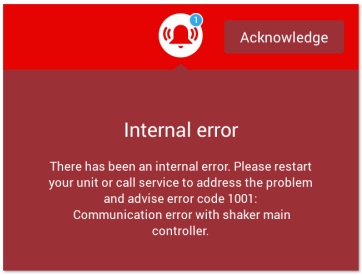

Figure 38: Error Screen

Handle the problem as follows and try to resume operation:

1. Note the error code shown on the error screen.
2. Tap **Acknowledge** to mute the alarm tone.
3. Restart the shaker by powering it off and back on.
4. If the error message still persists contact Thermo Fisher Scientific customer service and indicate the error code displayed on the error screen.

3. 2. 3. Settings

The second item on the navigation bar is the Settings icon. The screen shown below appears when you tap **Settings**. The Settings screen holds more buttons than can be shown in one go in the display window. You have to scroll to see the remaining buttons, as shown on the right side of Figure 39.

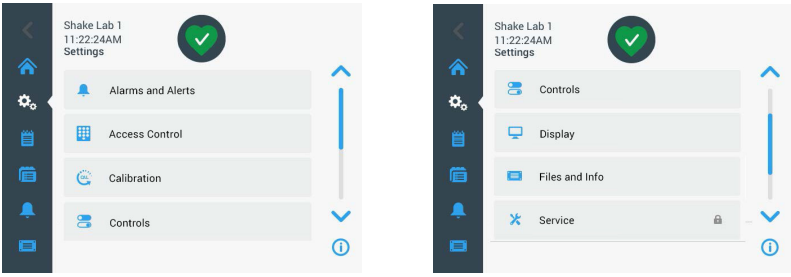

Figure 39: Settings Screen

Alarms and Alerts

The Alarms and Alerts screen lets you determine how and when alarms and alerts are being issued.

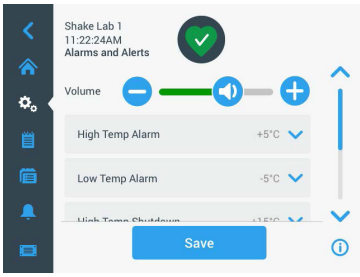

Figure 40: Set Alarms and Alerts Preferences

Volume: This control lets you change the speaker volume of the tone that sounds when an alarm or alert is issued. Drag the slider to the left to decrease or right to increase the volume, then tap **Save**. This volume setting will affect both alarms and alerts.

Figure 41: Set Speaker Volume for Alarms and Alerts

High Temperature Alarm / Low Temperature Alarm (temperature controlled shakers only): These two options let you set a high and a low temperature alarm threshold relative to the temperature setpoint (see "Set Temperature" on page 65). Whenever the temperature inside the shaker's chamber falls below the low or surpasses the high temperature threshold, the shaker issues an alarm. Choose a temperature threshold value and tap **Save**.

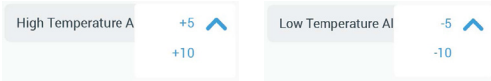

Figure 42: Set High and Low Temperature Alarm

NOTICE The alarm thresholds shift accordingly whenever you change the temperature setpoint.

High Temperature Shutdown / Low Temperature Shutdown (temperature controlled shakers only): These two options let you set a high and a low temperature safety shutdown threshold relative to the current temperature setpoint (see "Set Temperature" on page 65). Whenever the temperature inside the shaker's chamber falls short of the low or surpasses the high temperature threshold, the shaker shuts down automatically to

protect the samples being processed in the chamber. Choose a threshold value and tap **Save**.

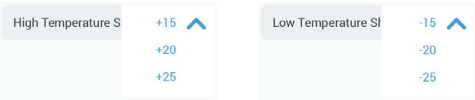

Figure 43: Set High and Low Shutdown Thresholds

NOTICE The error thresholds shift whenever you change the temperature setpoint.

Snooze Timeout: The snooze timeout period determines for how long an alarm is silenced when you tap the snooze button on the red bar that appears on top of the main window (see "Alarm" on page 69). You can set the snooze timeout to 5 minutes, 10 minutes or 15 minutes. The default option is 10 minutes. Tap **Save** to save the changes.

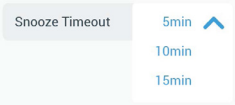

Figure 44: Set Snooze Timer for Alarms

Disable Calibration Notifications (temperature controlled shakers only): These options let you disable the notifications that remind you on a regular basis to calibrate temperature measurement (refer to "Temperature Calibration" on page 128) on your shaker. You can choose to disable the calibration reminders altogether or only while a program is running.

Figure 45: Disable Calibration Notifications

Access Control

The Access Control screen lets you assign an administrator passcode to cater for processes with restricted access requirements.

By default, the shaker is in “Open Mode”, that is, you do not need to enter a passcode to access and operate the unit. Switching to “Secure Mode” requests the admin passcode from any user who wants to change the shaker's settings. It displays a Login button in the top right corner of the touchscreen display.

The following comparison of “Open Mode” versus “Secure Mode” indicates when a passcode login is required.

Action	Passcode Required in Open Mode	Passcode Required in Secure Mode
Set speed, time and temperature setpoints	No	No
Start and stop the shaker	No	No
Calculate orbits	No	No
Acknowledge alarms and alerts	No	No
View Files and Info screen	No	No
View Health Status	No	No
View and export event log and charts	No	No
Snooze Alarms	No	No
Run programs	No	No
Create, edit, and delete programs	No	Yes
Change display settings	No	Yes
Change control settings	No	Yes
Change alarm and alert settings	No	Yes
Change access control settings	No	Yes
Import or export programs	No	Yes
Perform a Factory Reset	No	Yes
Perform a calibration	No	Yes
Install a firmware upgrade	Yes	Yes

Table 52: Passcode Login Requirements in Open and Secure Mode

Figure 46 shows the Access Control screen in Open and Secure mode.

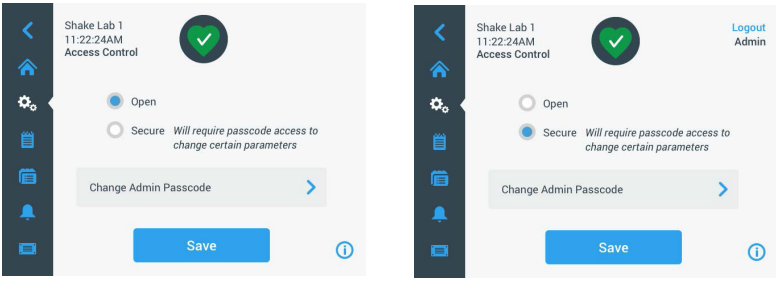

Figure 46: Access Control: Open Mode (left) and Secure Mode (right)

When you tap **Secure** followed by **Save** you will be prompted to enter the admin passcode before the change can be confirmed. All units ship with the same admin passcode pre-set at the factory and printed in the manual.

Likewise, any user who tries to change a passcode-protected setting will be prompted to enter the admin passcode.

NOTICE The pre-set administrator passcode is "00000".

The **Change Admin Passcode** button allows you to change the pre-set passcode. If you tap the **Change Admin Passcode** button, you will be prompted to enter the current passcode first, followed by the new passcode, and then the new passcode one more time to confirm. The **Your new passcode has been saved** message indicates that the operation has been successful.

Calibration

The Calibration screen (temperature-controlled models only) opens a series of screens to let you calibrate the shaker for precise temperature control. The process is described in "Temperature Calibration" on page 128.

Controls

The Controls screen provides options for pre-setting the default operating parameters you wish the unit to start with:

Speed Setpoint: You can pre-set the speed setpoint to a value between 15 and 525 rpm. Roll the dials of the wheel picker to pre-set speed and tap **Save**. Detailed instructions for using the Speed Setpoint screens appear in the section "Set Speed" on page 62 in chapter 3. 2. 1.

Time Mode: You can run the shaker in Continuous or Timed mode. In Continuous mode, you stop the shaker manually at your discretion. In timed mode, the drive of the shaker stops automatically when the timer expires. For timed mode, you can pre-set a default runtime and choose whether the GUI should display elapsed time or remaining time while the shaker is running. Detailed instructions for using the Time Mode screen appear in the section "Set Runtime" on page 64 in chapter 3. 2. 1.

Temp Setpoint (temperature-controlled models only): This option lets you set a default temperature you wish the shaker to display at startup. Detailed instructions for using the Temp Setpoint screen appear in the section "Set Temperature" on page 65 in chapter 3. 2. 1.

Auto Restart: This feature restarts the unit after a power outage that has occurred during a normal start/stop run, the execution of a program, or a temperature calibration run. If the Auto Restart is set to **No**, the unit will not restart after a power outage.

Display

The display settings allows you to change various display options.

Brightness: To adjust the brightness level of the display use the slide control or the +/– buttons.

Figure 47: Adjust Screen Brightness

Language: To change the display language, tap the **Language** button. Select the desired language by rolling the wheel picker and tap **Save**.

Figure 48: Select Display Language

Units of Measure (temperature-controlled models only): Tap **Units of Measure** to switch all temperature readouts on the GUI screens between degrees Celsius C° and Fahrenheit °F.

Figure 49: Select Temperature Display Unit

Date: To set the date, tap the Date button. Roll the month, day and year dials of the wheel picker to choose and tap **Save**.

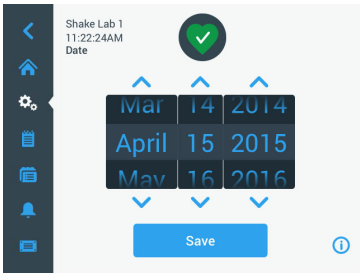

Figure 50: Set Month, Date and Time

Date Format: To set the date format, tap the **Date Format** button. Tap the desired radio button for the date format of your choice (example: MM/DD/YYYY will display as April 15, 2015) and tap **Save**.

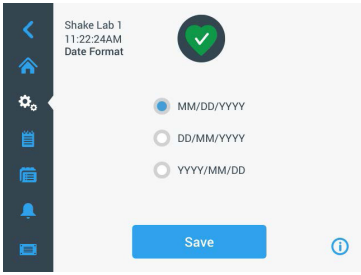

Figure 51: Set Date Format

Time: To set the time and time format, tap the **Time** button. Tap **12hr** or **24hr**, then roll the hour, minute and AM/FM (12-hour format only) dials of the wheel picker and tap **Save**.

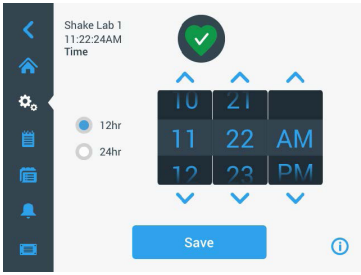

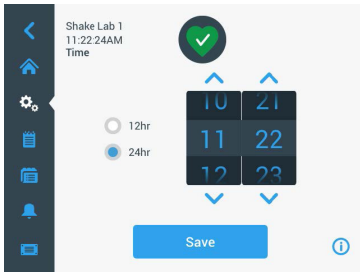

Figure 52: Set Time and 12-Hour or 24-Hour Time Format

Sleep Mode: Tap **Sleep Mode** to have the shaker's display go to sleep after 15 minutes of inactivity. In sleep mode, the screen presents the user with a **Tap to wake** prompt.

Figure 53: Activate Sleep Mode

Region: To specify the region the unit is operated in, tap the **Region** button. Tap the City, Country text box and start typing the first characters of your city's name. The GUI will start suggesting matches after the first three characters. Accept a match or continue typing the complete name, then tap **Save** on the on-screen keypad.

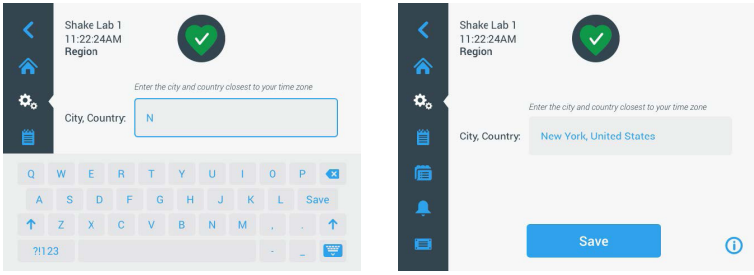

Figure 54: Set Region

Unit Name: To name or rename the your shaker, tap the **Unit Name** button. Tap the **Unit Name** text box and start typing. When you are done, tap **Save** on the on-screen keypad.

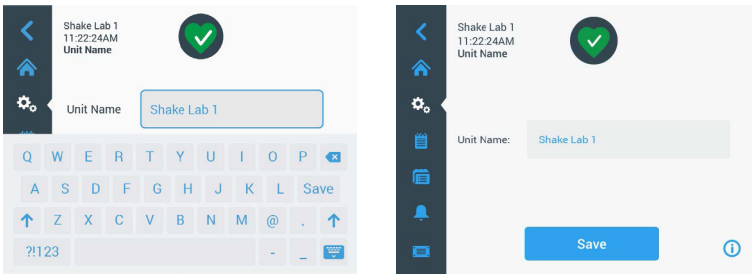

Figure 55: Name the Shaker

Customize Menu: Tap the **Customize Menu** button to customize the two bottom icons in the main navigation bar. Drag the desired icon from the main screen area onto the icon you wish to replace. Tap **Save** to confirm.

NOTICE Tapping **Reset Menu** lets you restore the navigation bar to its factory setting at any time.

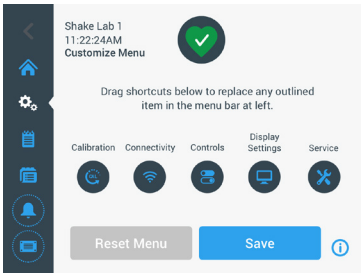

Figure 56: Customize Navigation Bar

Files and Info

This screen shows the serial number, the GUI application software and its version, the shaker main controller firmware and its version, the parameter file and its version, and the current operating system.

You can also tap **Factory Reset** to restore the shaker to the factory default settings. Resetting to factory defaults requires the admin passcode and erases all settings made using the Graphical User Interface. The event log is not deleted by factory reset.

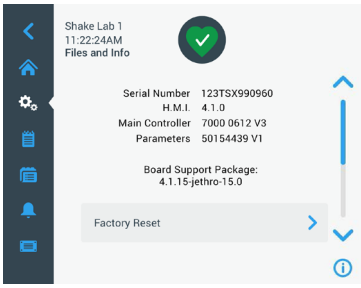

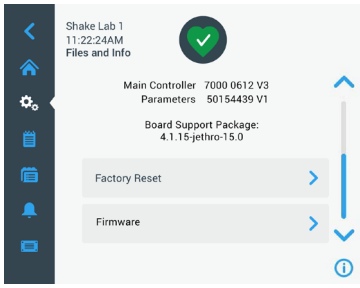

Figure 57: Files and Info

Scrolling further down reveals the **Firmware** button shown on the right side of Figure 57. You can tap this button to install new firmware for the shaker. For detailed instructions on installing new firmware, please refer to "4. 7. Firmware Installation" on page 132.

NOTICE New firmware must be obtained from an authorized service technician.

Service

The Service settings are restricted and can be accessed by authorized service technicians only.

3. 2. 4. Programs

Tap the **Programs** icon from the navigation bar to display the list of programs or create a new program. You can create, edit, delete, import and export a program. Shown in Figure 58 is the Programs window for a new device (left) and a device that has been in use for some time (right). The device in use displays a list of user-created programs.

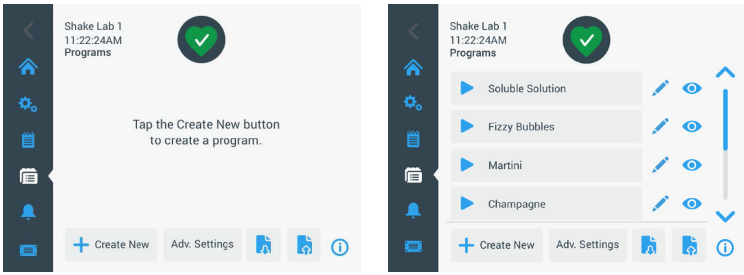

Figure 58: Programs

Each item in the list of programs has an eye icon that opens a Program Quick View screen with the program's details and a pencil icon that opens the program for editing.

Set Preferences for All Programs

From within the Program screen the **Adv. Settings** button takes you to the **Advanced Settings** screen. This screen lets you determine what happens when you start a program. These preferences apply to all programs you create.

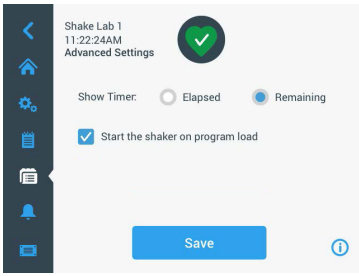

Figure 59: Set program preferences

1. Tap the **Adv. Settings** button.

2. Choose an option for **Show Timer** to determine how you wish to have the program timer displayed:
   - » Elapsed: how long the shaker has been running since you have pressed the Start button, or
   - » Remaining: how long the shaker will keep running until the timer expires
3. If you wish the shaker to start running immediately when you start a program, activate the **Start the shaker on program load** option. The default behavior is that you have to tap the **Start** button in order to run a program.

   NOTICE The **Start the shaker on program load** works as expected only if the hood of the shaker is closed. As soon as hood is closed the run starts automatically.
4. Tap **Save**.

Create a Program

You can create and store up to 99 programs.

1. Tap the **Create New** button.
2. Enter the name of the program.

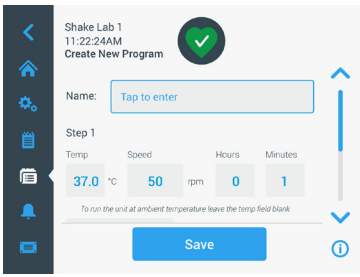

Figure 60: Create program

3. Enter temperature (temperature-controlled models only), speed and runtime of the program in hours and minutes.

   To disable temperature control on a temperature controlled shaker, leave the **Temp** field blank.
4. To add an extra step to your program, scroll down and tap on the **Add Step** button.
5. Tap **Save** to save the program.

Edit a Program

1. Tap the pencil icon beside the program you want to edit.

2. Edit the required fields. Tap **Save**. The program is saved with the new changes.
3. You can add a step by selecting **Add Step** at the bottom of the screen. Scroll the screen to see the **Add Step** button if there are more than 3 steps.

   NOTICE If during shaking operation with several steps an alarm or an error message occurs the shaker will automatically stop. If an alert occurs shaking operation will continue.

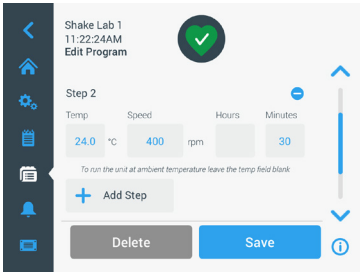

Figure 61: Add step

Delete a Program

1. Tap the pencil icon beside the program you want to edit.
2. Tap **Delete**. A window appears asking for confirmation.

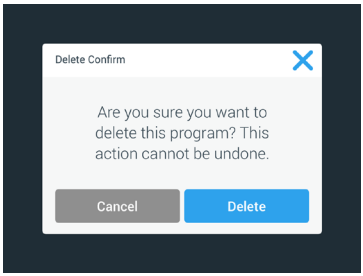

Figure 62: Delete program

3. Tap **Delete**. The selected program is deleted.

Run a Program

1. To run an existing program, select the program you want to run.
2. If you want to see the Quick view of the program, Tap on the eye icon beside the program.

3. A Program Quick view window appears.

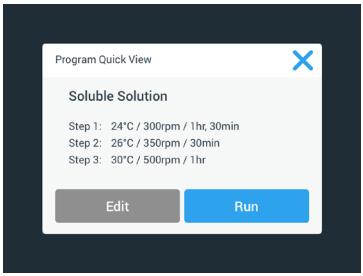

Figure 63: Program quick view

4. Tap **Run** to load the program on the Home screen.

   Depending on your chosen **Auto Run** settings the program starts immediately or will start when the **Start** button is tapped on the home screen.

5. When the program is complete, the following window appears. Tap **OK**.

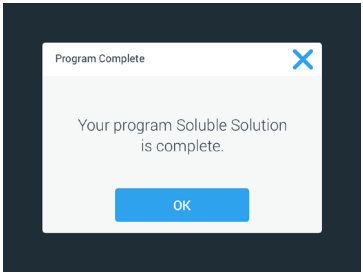

Figure 64: Program complete

Import Programs

You can import the programs created in one shaker to another shaker. This requires that the USB drive is plugged into the USB port of the shaker.

The following screen shows all the programs identified on the USB drive.

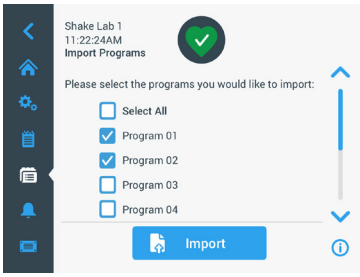

Figure 65: Select programs for import

Select the programs you want to import. Tap **Import**.

After the programs have been imported successfully, the following window appears. Tap **OK**. You may now remove the USB.

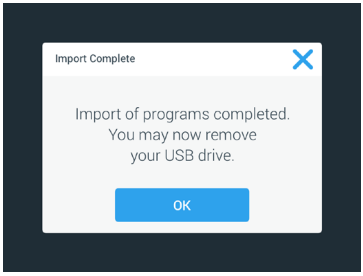

Figure 66: Program import complete

Exporting Programs

You can export programs from one shaker to another shaker. Ensure that a USB drive is connected.

The following screen is displayed if the USB is connected:

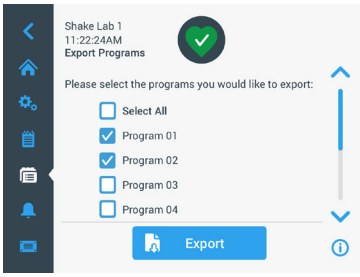

Figure 67: Select programs for export

Select the programs you want to export. Tap **Export**.

The following window appears when the export is completed. Tap **OK**. You may now remove the USB.

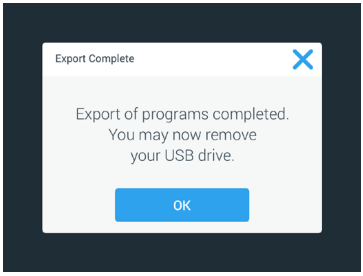

Figure 68: Program export complete

Event Log

The third tab on the navigation panel is the event log that contains a record of user and system events. The Event Log screen is displayed by tapping the Event Log icon from the menu bar, as shown in Figure 69.

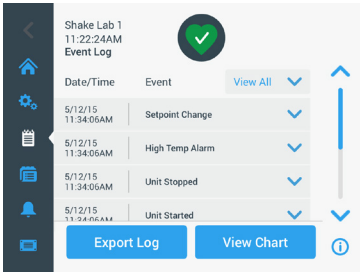

Figure 69: Event Log

This screen displays a list of recent events, with date and time stamps for each event.

Additional information for an individual event can be viewed by selecting the item from the list.

Events can be filtered by type according to the following categories:

- alarms
- alerts
- changes to settings
- start/stop actions
- program runs
- hood opening actions (temperature-controlled models only)

When a filter is selected, the View All button on the right changes to Filter ON as shown in Figure 70.

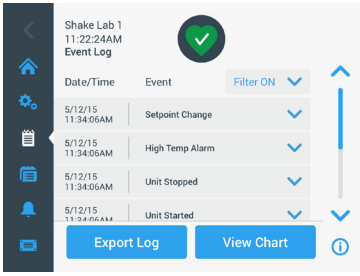

Figure 70: Filtered Event Log

Export the Event Log

1. Choose the events to be exported from the **Events to Export** drop-down list. Select the export format of the log or report.

   Figure 71: Select event log for export

2. A predefined or custom date range may be selected.

   NOTICE You can only export events from the last six months.

3. Export can be done using an USB drive. An USB drive must be inserted to store the log or report. Tap the **Export Log** button to download the log or report.

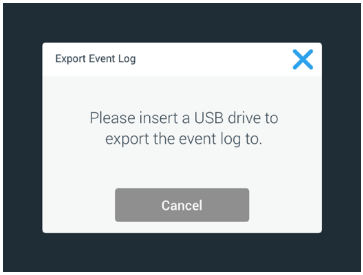

Figure 72: Insert USB drive for export

Charts

Charts display graphs of speed or temperature (temperature-controlled models only) data over time. The X-axis displays time and the Y-axis displays speed or temperature.

The temperature chart allows you to plot the setpoint, actual and ambient temperature over time. You can use the **Edit** button to choose which of the three curves to include in the temperature chart. Additionally the viewing range can be changed to 1 day, 7 days or a user-specified sequence of days, either over the full 24 hours or during selected hours of each day.

The **Refresh** button updates the chart display according to your settings and shows any new data recorded since the last time the chart has been loaded or refreshed.

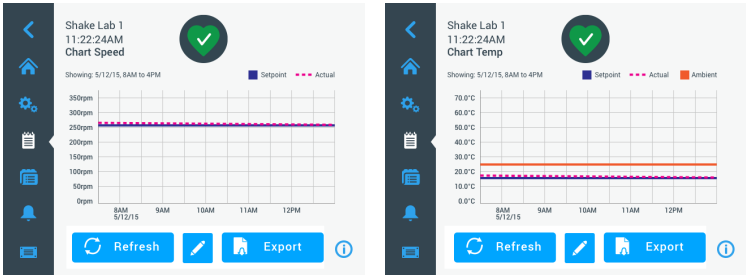

Figure 73: Speed and Temperature Charts

You can insert a USB drive into the USB port of the shaker and tap **Export Chart Data** to download the data for the speed or temperature chart.

Edit the Chart

1. Tap **Edit** to start editing the chart.

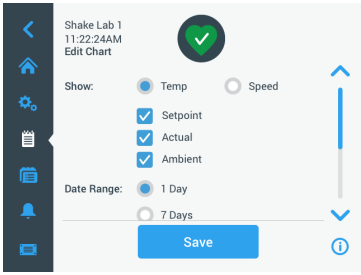

Figure 74: Edit Chart: Select Temperature or Speed for Recording

2. Tap **Temp** or **Speed** to choose which chart to show.
3. Scroll further down to display the **Date Range** options.
4. Tap to select 1 Day, 7 Days or **Custom** for a custom date range.

5. Roll the dials of the wheel picker to choose the start date and tap the **Set From Date** button.
6. Roll the dials of the wheel picker to choose the end date and tap the **Set To Date** button.

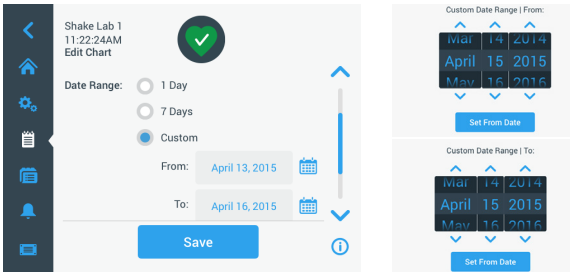

Figure 75: Select Date Range for Charting

7. Scroll further down to display the **Time Range** options.
8. Tap to select 24hr Per Day, or tap **Custom** to chart a specific time period and

   a. Roll the dials of the wheel picker to choose the daily start time and tap the **Set From Time** button.

   b. Roll the dials of the wheel picker to choose the daily end time and tap the **Set To Time** button.

   NOTICE By choosing the start and end times you opt for charting the exact period between two points in time. If you work with the 24 hr Per Day option, the charting starts at 00:00 and ends at 23:59 each day.

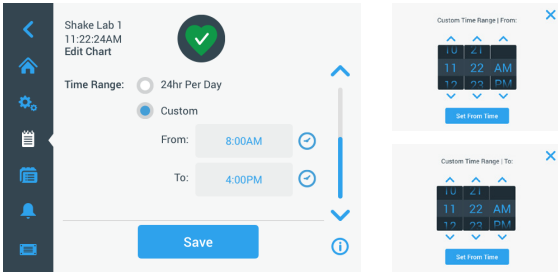

Figure 76: Select Hours of the Day for Charting

9. Tap **Save** to save the changes or custom settings.

3. 3. Accessories

CAUTION

Physical and biological harm due to broken vessels.
Improperly installed accessories can lead to broken glass and spilled samples.
Make sure that accessories are installed properly by using the correct tools and screws.
Make sure that accessories fit reasonably on the platform.
Always use a vessel with an accessory of the proper size.

CAUTION

Cutting injuries from sharp edges.
Be cautious while handling platforms and other accessories.

CAUTION

Fingers can be pinched by moving platform.
Never put your fingers on or below a platform while it is moving.

NOTICE

It is your responsibility to make sure that the accessories are installed properly.

Installation procedures described apply to all shaker models listed in this instruction manual until otherwise stated.

Always use the correct tools, in particular the tools supplied with the accessory. If you loose some of these items you can re-order spare part kits listed ("Accessories" on page 18). Do not use tools other than specified or screws other than those supplied.

3. 3. 1. Platform Installation

CAUTION A full list of compatible platforms for each shaker appears in the section "1. 2. 1. Platforms" on page 19. Temperature controlled shaker models may only be operated with the factory pre-installed platforms.

CAUTION Cutting injuries from sharp edges. When uninstalling a platform, grasp under the platform. Do not lift a platform by clamps mounted on it. Be cautious while handling platforms and other accessories.

CAUTION Hand or Fingers can be squeezed by a moving 11x14 platform in the Solaris 4000 I / 4000 R shaker. Do not use the 11x14 platform in the Solaris 4000 I / 4000 R shaker.

CAUTION Use only the screws and the locking tool supplied with the platform. Using other screws or wrong locking tools will lead to improper installation and therefore possibly can damage the shaker and accessories.

Always install a platform with **all** screws.

Always use the proper locking tool:

- 3/16” locking tool (GT530066) for all platforms of Solaris 2000 and Solaris 2000 I/R and 4000 I/R shakers
- 7/32” locking tool (GT530080) for all platforms of Solaris 4000 shakers

Universal Platforms

Each Solaris 2000 and 4000 shaker comes with one piece of universal platform, screws and a locking tool. You may purchase additional platforms to suit your applications. A full list of compatible platforms for each shaker appears in the section "1. 2. 1. Platforms" on page 19.

The 2000 I, 2000 R, 4000 I and 4000 R shakers come with the platform pre-installed in the shaker. Neither the platform nor the screws exist as detached parts.

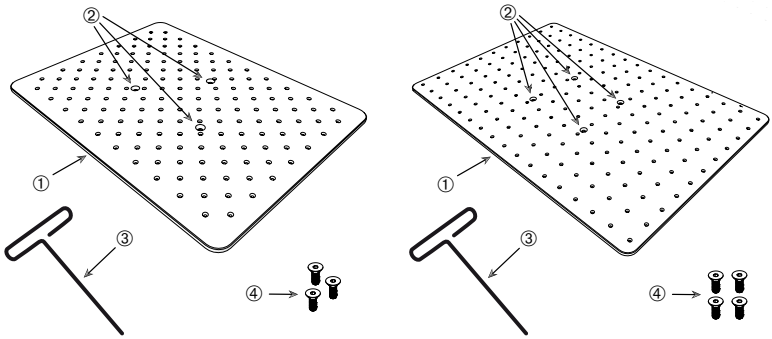

① – Platform (left: 3-hole, right: 4-hole)
② – Mounting holes (3 or 4)
③ – Locking tool
④ – Screws (3 or 4)

Figure 77: Examples of universal platforms

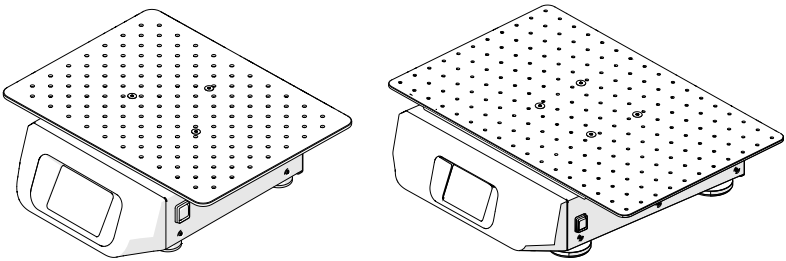

Figure 78: Universal platform installed on a Solaris 2000 (left) and a Solaris 4000 (right) shaker

1. Carefully position the platform horizontally over the shaker and its mounting points.

   Platforms for Solaris 2000 shaker have 3 mounting holes. Platforms for Solaris 4000 shaker have 4 mounting holes.
   Platforms for Solaris 2000 I/R and 4000 I/R shaker have 3 mounting holes.
2. Tighten the screws gently to secure the platform to the shaker. When the locking tool starts bending, stop tightening.

Dual Stack Platforms

NOTICE Dual stack platforms are not compatible with Solaris 2000 I/R and 4000 I/R shaker.

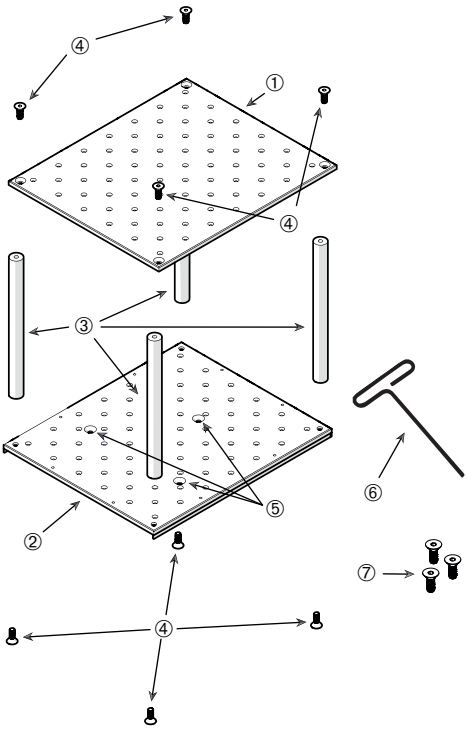

① – Upper platform (no pinch protection)

② – Lower platform (with pinch protection)

③ – Pillars (4x)

④ – Screws for mounting the pillars (4x for upper platform and 4x lower platform)

⑤ – Mounting holes

⑥ – Locking tool

⑦ – Screws for connecting the platform to the platform mounting plate on the shaker

Figure 79: Dual Stack Platform Assembly

Connect the upper and the lower platform by mounting them with the 4 pillars in each corner. Mount the pillars with the proper screws from the upper and from the lower platform.

Tighten the screws gently to connect the pillar and the platforms. When the locking tool starts bending, stop tightening.

The lower platform is the one with the mounting holes for connecting it to the shaker. Make sure to have the lower platform on the bottom side when assembling.

NOTICE Before placing vessels on the platform assembly, make a final check to be sure that the platform assembly does not wobble.

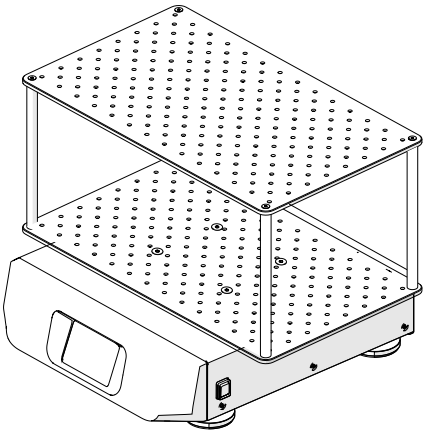

Figure 80: Dual Stack Platform on a Solaris 4000 Shaker

1. Carefully position the assembled dual stack platform horizontally over the shaker and its platform mounting plate.

   Platforms for Solaris 2000 have 3 mounting holes, Platforms for Solaris 4000 have 4 mounting holes.
2. Tighten the screws gently to secure the platform to the shaker. When the locking tool starts bending, stop tightening.

3. 3. 2. Flask Clamp and Vessel Installation

CAUTION Biological harm due to broken or leaking vessels. Improperly installed accessories can lead to spilled samples. Make sure that accessories are installed properly by using the correct tools and screws. The installation requires a screwdriver (PH2) with a shaft length of 150 mm / 6 in. (Article Number 75004131). Make sure that accessories fit reasonably on the platform. Always use a vessel with an accessory of the proper size. Vessels must be intact and installed properly.

CAUTION Cutting injuries from sharp edges. Be cautious while handling platforms and other accessories.

CAUTION Safe fixation of a clamp is only ensured in combination with the provided screws. Install the provided screws in all designated mounting bores of that clamp.

NOTICE If the screws are too long, the stability and functionality of the interchangeable platform may be impaired. Make sure to use only the screws included in the delivery for fastening.

Clamps

Each clamp consists of a vessel clip, one or two springs depending on the clamp/bottle size and screws for mounting it on the platform. Only use the screws supplied with the clamp.

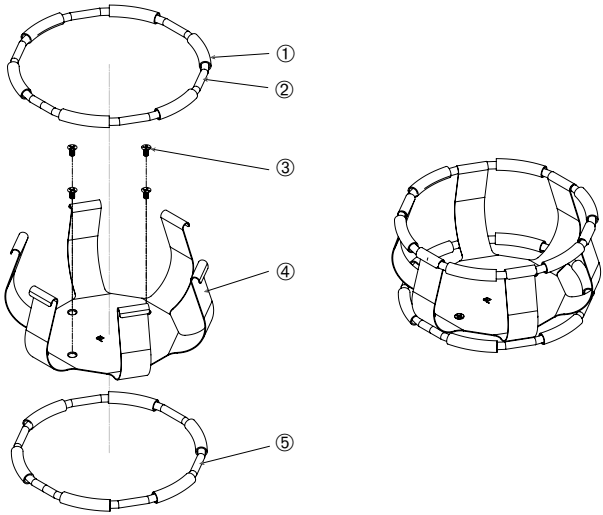

① Spring Tube ② Spring ③ Screws ④ Clip Leg ⑤ Spring

Figure 81: Clamp Details with 2 Springs

Install as follows:

1. If needed, attach the spring to the clip legs as shown in the illustrations.
2. The rubber spring tubes are positioned between the clip legs as shown in the illustration. Some clamps use two springs. The second spring is installed around the base of the clip assembly after it has been mounted to the platform.
3. Attach the clip assembly to the platform with the screws provided.

Vessel

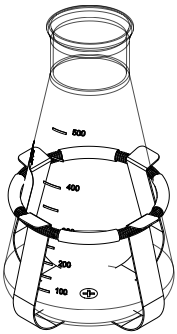

1. Carefully place the desired vessel in the clamp by first pulling the clamp spring far enough apart to enable the vessel base to be positioned inside the clamp. Gently slide the vessel into its proper position, securing it to the wider bottom of the clamp. The spring will hold the neck of the vessel securely in place.
2. Make sure all vessels are securely clamped before powering on the unit.

   Wherever possible, the vessel should be sealed with a stopper to prevent substances from being thrown out during the mixing action.

3. 3. 3. Square Clamp Installation

CAUTION Biological harm due to broken or leaking vessels. Improperly installed accessories can lead to spilled samples. Make sure that accessories are installed properly by using the correct tools and screws. The installation requires a screwdriver (PH2) with a shaft length of 150 mm / 6 in. (Article Number 75004131). Make sure that accessories fit reasonably on the platform. Always use a vessel with an accessory of the proper size. Vessels must be intact and installed properly.

CAUTION Cutting injuries from sharp edges. Be cautious while handling platforms and other accessories.

Square Clamp Details

Each square clamp consists of a bottom panel with mounting bores and four spring-loaded clip legs. Also included are screws for mounting the clamp on the platform. Only use the screws supplied with the clamp.

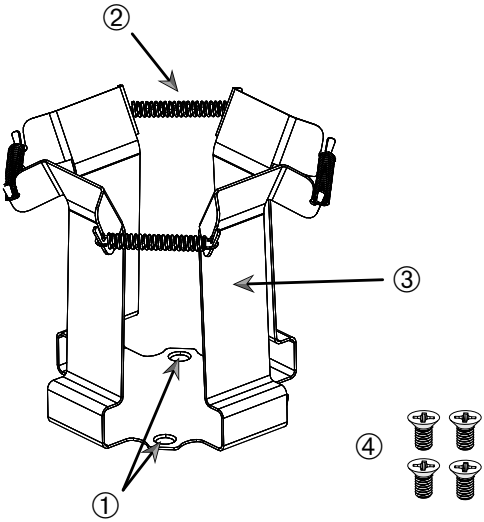

① Mounting Bores ② Spring ③ Clip Leg ④ Screws

Figure 82: Square Clamp Details

Install as follows:

1. If needed, hook all springs ② into the clip legs ③, as shown in Figure 82.
2. Place the clip assembly on the platform and align the mounting bores ①.
3. Attach the clip assembly to the platform using the screws ④ supplied.
4. Insert the square vessel from above.
5. Verify that the vessel rests on the bottom panel and is firmly seated in the clamp.

3. 3. 4. Test Tube Rack Installation

CAUTION Cutting injuries from sharp edges. Be cautious while handling platforms and other accessories.

Each test tube rack consists of two mounting brackets (wire frame or sheet metal) with a locking knob and two finger screws per test tube carrier for mounting it on the platform. Each test tube rack assembly comes pre-assembled with a test tube rack and foam insert(s). Always use the screws supplied with the rack.

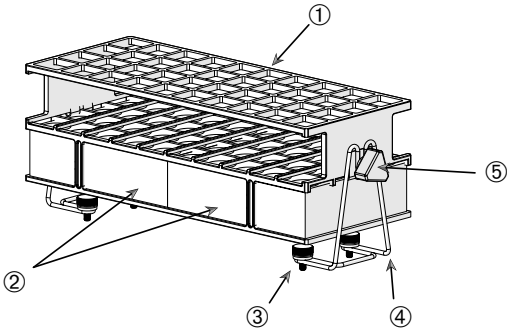

① Test tube rack
② Foam inserts
③ Finger screws
④ Mounting bracket
⑤ Locking knob

Figure 83: Test Tube Rack Assembly with Wire-Frame Mounting Brackets

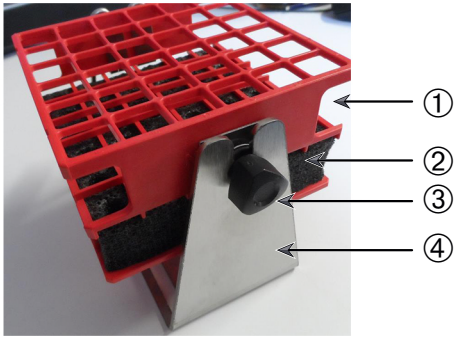

① Test tube rack
② Foam inserts
③ Locking knob
④ Mounting bracket

Figure 84: Test Tube Rack Assembly with Sheet Metal Mounting Bracket

Install as follows:

1. Install the mounting brackets on the platform using the finger screws. Tighten the finger screws until hand tight.
2. Insert the test tube rack into the mounting brackets.
3. Set the required angle by using the locking knobs. Tighten the locking knobs until hand tight.

3. 3. 5. Adjustable Angle Test Tube Rack Holder Installation

CAUTION Cutting injuries from sharp edges. Be cautious while handling platforms and other accessories.

Test tube rack holders and test tube racks are available in various sizes, as listed in the chapter "1. 2. 5. Adjustable Angle Test Tube Rack Holders" on page 29. All test tube rack holders are adjustable into seven positions, swinging from 0° in either direction and locking at 15°, 30° and 45°.

Always use the screws supplied with the rack holder.

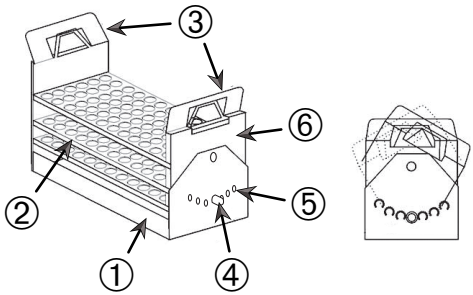

① Rack holder

② Test tube rack

③ Clamping tabs

④ Locating bores

⑤ Locking pin knob

⑥ Swing bed of holder

Figure 85: Adjustable Angle Test Tube Rack Holder with Test Tube Rack Installed

Install as follows:

1. Install the rack holders ① on the shaker platform using the screws supplied.
2. Slightly spread the metal tabs ③ on either end of the rack holder's swing bed ⑥ and insert the test tube rack ②.
3. Secure the test tube rack ② by carefully releasing the tabs ③.
4. Pull the knobs ⑤ of the locking pins on either end of the holder outward. The pins are unlocked by turning the knob 1/4-turn.
5. Rotate the swing-bed ⑥ of the rack holder ① to the desired angle of 15°, 30° or 45° degrees.
6. Reinstall the locking pin ⑤ in the locating hole ④ and lock the pin by turning the knob 1/4-turn.
7. To remove the rack, spread the metal tabs ③ on either end of the swing bed ⑥ and lift out the test tube rack ①.

3. 3. 6. Microplate / DeepWell-Plate Clamp Installation

CAUTION Cutting injuries from sharp edges. Be cautious while handling platforms and other accessories.

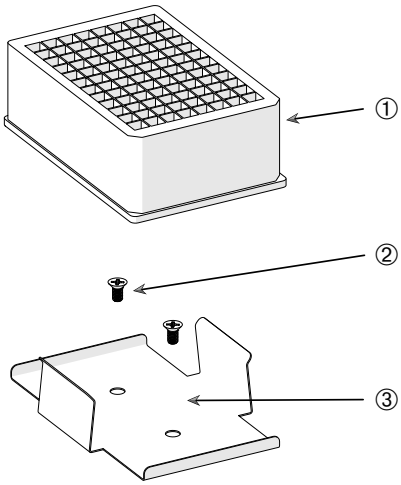

① DeepWell Plate

② Screw

③ Microplate Clamp

Figure 86: Microplate / DeepWell-plate Clamp Assembly

Install as follows:

1. Place the microplate frame on the platform.
2. Mount the microplate frame to the platform using the screws supplied with the microplate / DeepWell-plate set.
3. Insert the microplate or DeepWell-plate into the microplate frame.
4. Make sure that the microplate or DeepWell-plate is tightly seated by lifting it gently.

3. 3. 7. Adjustable Vessel Clamp Installation

CAUTION Cutting injuries from sharp edges. Be cautious while handling platforms and other accessories.

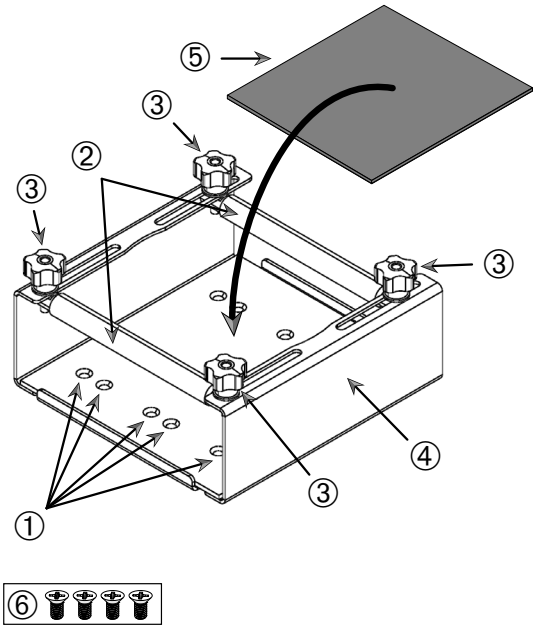

① Mounting bores ② Adjustable rods ③ Locking knobs ④ Tray sidewall
⑤ Anti-slide mat ⑥ Screws

Figure 87: Single Adjustable Vessel Clamp Assembly

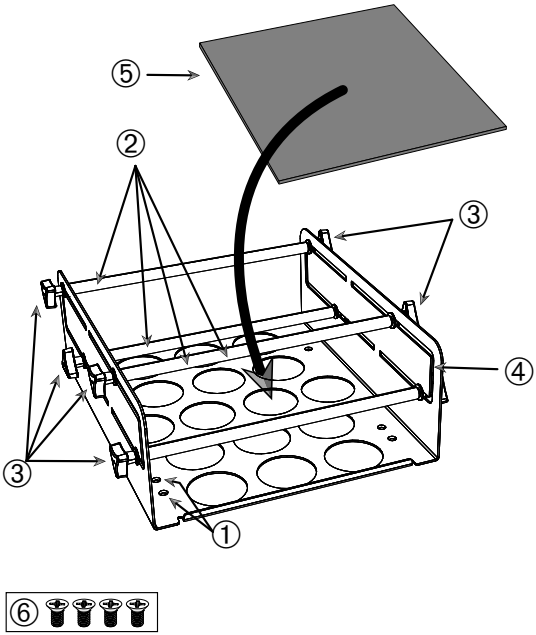

① Mounting bores ② Adjustable rods ③ Locking knobs ④ Tray sidewall
⑤ Anti-slide mat ⑥ Screws

Figure 88: Dual Height Adjustable Vessel Clamp Assembly

Install as follows:

1. Lift the anti-slide mat to expose the mounting bores (items ① in Figure 88).
2. Place the adjustable vessel clamp on the platform and align the mounting bores.
3. Mount the adjustable vessel clamp to the platform using the screws ⑥ supplied with the clamp.
4. Place the anti-slide mat ⑤ on the bottom of the adjustable vessel clamp.
5. Place the vessel(s) on the anti-slide mat ⑤.
6. Loosen the locking knobs ③.
7. Adjust the adjustable rod positions ② so the vessels are securely clamped.
8. Re-tighten the locking knobs ③.
9. Make sure that the vessel is securely clamped by lifting it gently.

3. 3. 8. Beaker Rack Installation

CAUTION Cutting injuries from sharp edges. Be cautious while handling platforms and other accessories.

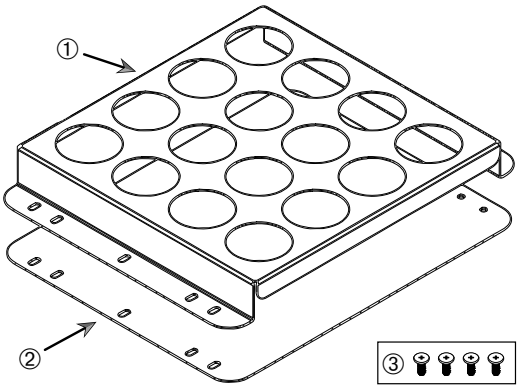

① Beaker rack
② Bottom panel
③ Screws

Figure 89: Beaker Rack Assembly

Install as follows:

1. Place bottom panel ② on platform.
2. Place beaker rack ① on top of bottom panel.
3. Align mounting bores with platform.
4. Fasten the beaker rack assembly using the screws ③ supplied with the product.

3. 3. 9. Separatory Funnel Clamp Installation

CAUTION Cutting injuries from sharp edges. Be cautious while handling platforms and other accessories.

NOTICE Make sure to use the correct screws. There are two different screws supplied. The longer screws with a red thread locker are to be used for securing the vertical stand. The shorter screws without any thread locker are only to be used for installing the separatory funnel clamp to the platform.

The separatory funnel clamp can be mounted on the shaker platform in two basic orientations: horizontal and vertical.

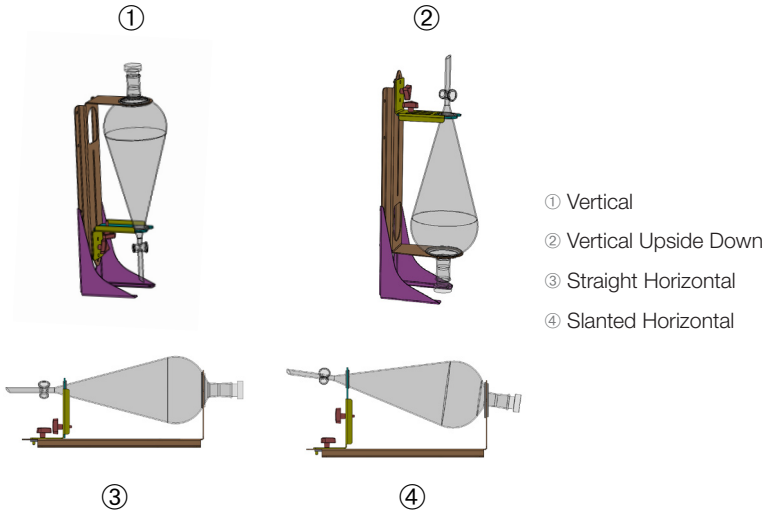

Figure 90: Separatory Funnel Clamp Mounting Positions

The horizontal position ③ in Figure 90 can be adjusted in height to obtain the slanted orientation shown at ④. Additionally, the separatory funnel clamp can be combined with the vertical stand (supplied as an accessory) to create the vertical arrangements shown at ① and ②. Also, the clamp can be installed with the funnel tap facing downwards ① or reversed to obtain the upside down configuration shown at ②.

Prepare Vertical Installation

Figure 91 shows the separatory funnel clamp assembly Ⓐ with its vertical stand accessory Ⓑ side by side.

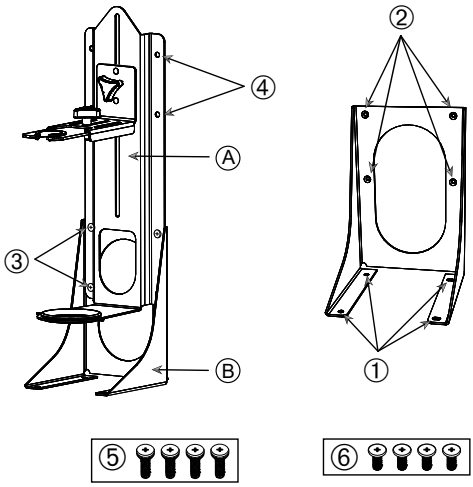

Ⓐ Funnel Clamp

Ⓑ Vertical Stand

① Smooth Bores for Mounting to Platform

② Threaded Bores for Mounting Funnel Clamp

③ Standard Vertical Stand Mounting Bores

④ Upside Down Vertical Stand Mounting Bores

⑤ Screws with red thread locker

⑥ Screws without thread locker

Figure 91: Separatory Funnel Clamp (right) with Vertical Stand Accessory (left)

1. Fit the separatory funnel clamp to the long end of the vertical mount, as shown in ① and ② of Figure 90.
2. Align as follows with the four funnel clamp mounting bores (② in Figure 91) of the vertical stand:
   a. Use the standard vertical mounting bores (③ in Figure 91) to install with the funnel tap facing downwards.
   b. Use the upside down vertical mounting bores (④ in Figure 91) to install with the funnel tap at facing upwards.
   c. Secure the separatory funnel clamp to the vertical mount with the screws supplied (⑤ in Figure 91).

Installation on Platform

1. Place the separatory funnel clamp assembly on the platform.
2. Align the mounting bores with the platform.
3. Fasten the separatory funnel clamp assembly to the platform using the screws supplied with the separatory funnel clamp (⑥ in Figure 91 and Figure 92).

Funnel Installation

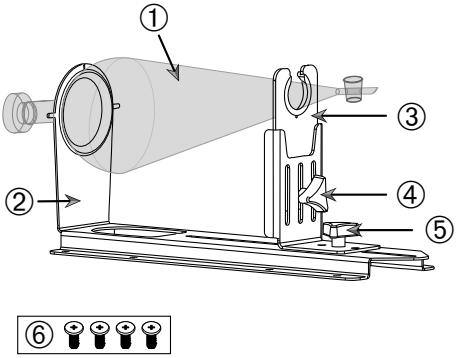

① Separatory funnel

② Rear funnel holder

③ Front funnel holder

④ Locking knob, height adjustment

⑤ Locking knob, length adjustment

⑥ Screws without thread locker

Figure 92: Separatory Funnel Clamp Assembly

1. Loosen the length adjustment locking knob ⑤ and slide the front funnel holder ③ all the way to the front position.
2. Insert the rear end of the funnel ① into the rear funnel holder ②.
3. Slide the front funnel holder ③ backwards and place the stem of the funnel in the opening of the front funnel holder ③.
4. Adjust the front funnel holder ③ to a convenient height and secure by tightening the height adjustment locking knob ④. By varying the height adjustment, you can tilt the separatory funnel to a slanted position.
5. Secure the front funnel holder ③ by tightening the length adjustment locking knob ⑤.

3. 3. 10. Utility Tray Installation

CAUTION Cutting injuries from sharp edges. Be cautious while handling platforms and other accessories.

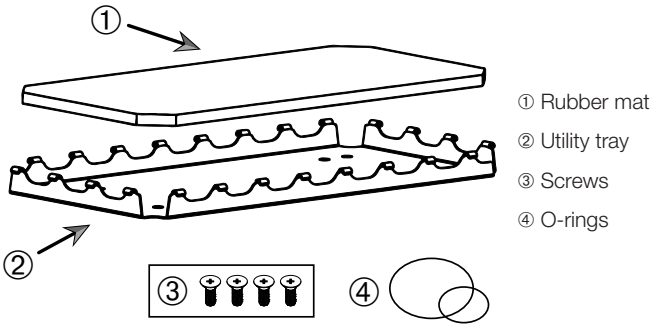

Figure 93: Utility Tray Assembly

Install as follows:

1. Place utility tray ② on platform.
2. Align mounting bores with platform.
3. Fasten the utility tray ② using the screws ③ supplied with the utility tray.
4. Place rubber mat ① in tray ②.
5. Place bottles on the tray and secure with the O-rings ④ supplied, as shown in Figure 94.

   NOTICE The use of the O-rings is recommended for speeds beyond 100 rpm.

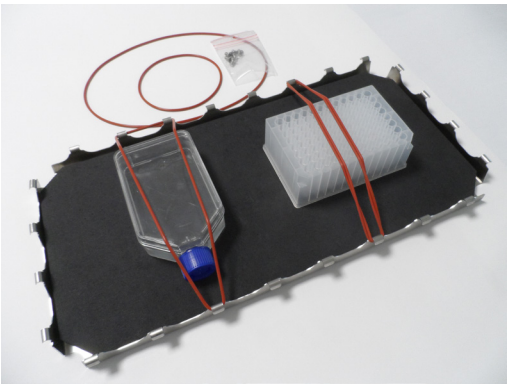

Figure 94: Utility Tray with Containers Installed and O-Rings

NOTICE Be careful not to overstretch the O-Rings when securing the containers. As you stretch each O-Ring to install, you will notice a dead spot in elasticity beyond which the O-Rings no longer stretches anymore. Once you have reached this point, you should not try to stretch the O-Rings any further because it will snap.

3. 3. 11. Adhesive Mat Installation and Use

Adhesive mats are suitable for containers with a wide, flat base, such as Erlenmeyer flasks, Fernbach flasks, media bottles, microplates, petri dishes, cell culture flasks, volumetric flasks and beakers. Generally, all vessels that can stand upright can be used, but as their base area to height ratio decreases, so does the maximum achievable shaking speed. Tall containers with a small base are less suitable, as shown in Figure 95. Large Erlenmeyer flasks (e.g. 3000 ml) will stick stronger than small ones (e.g. 100 ml).

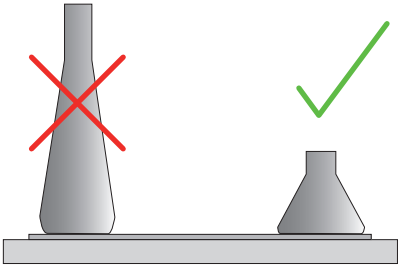

Figure 95: Adhesive Mat: Suitable Flask Shapes

There are two general types of adhesive mats available:

- Low Adhesion Mat (transparent) 75004111 and 75004117
  - » ease of handling due to lower stickiness
  - » particularly suited for beakers
  - » suitable for all vessels up to a maximum of 200 rpm (tissue culture growth application)
- High Adhesion Mat (black transparent) 75004126 and 75004127
  - » reliable vessel fixation due to higher stickiness
  - » suitable for all vessels
  - » maximum speed of 400 rpm (up to 500 ml Erlenmeyer)

Tools

The rolling applicator shown in Figure 96 is supplied as an accessory for adhesive mats. It is intended as a tool to help you press down the adhesive mat to the platform.

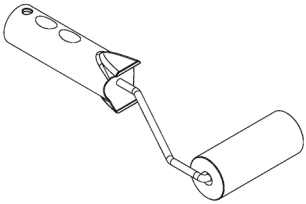

Figure 96: Rolling Applicator for Adhesive Mat

Dry Mat Installation

1. Make sure the shaker's platform is clean and dry.
2. Remove the protective foil from one side of the adhesive mat.
3. Apply the mat with the adhesive side down firmly to the platform.
4. Remove the top protective foil.

Wet Mat Installation

1. Remove the protective foil from both sides of the adhesive mat.
2. Immerse the mat in water or rinse it throroughly.
3. Allow the mat to drip off.
4. Spread the moist mat on the clean platform and position it as necessary.
5. Allow the mat to dry on the platform for 24 hours before using it.

Vessel Property Considerations

The maximum speed depends on the type of vessel, as distinguished by size, shape, bottom shape, material, surface roughness and cleanliness. You must evaluate these parameters to determine the optimum choice of mat for your application before using the shaker.

Use Table 53 to determine the suitability of your labware material for use with adhesive mats.

Plastics / Glassware	Stickiness Rating	Metal	Stickiness Rating
Glass (borosilicate glass)	5	Stainless steel	5
Polypropylene (PP)	3	Aluminum	5
Polypropylene Copolymer (PPCO)	3	Aluminum anodized	4
Polyethylene (HPDE) (LPDE)	3		
Polycarbonate (PC)	4		
Polyethylene terephthalate (PET)	4		
Polyethylene terephthalate copolyester (PETG)	4		
Polymethylpentene (PMP)	3		
Polytetrafluoroethylene (PTFE)	0*		
Tetrafluoroethylene-hexafluoropropylene copolymer (FEP)	0*		
Perfluoroalkoxy polymers (PFA)	2		
Silicone	1*		
Ratings: 0 = no stickiness at all; 5 = best stickiness / * Do not use vessels rated at 0 and 1 (PTFE, FEP and silicone).			

Table 53: Vessel Materials Compatibility

NOTICE Please note that the maximum shaking speed is only achievable with the materials rated at "5" in Table 53.

NOTICE For other materials than glass you have to test and determine yourself which kind of material can run which load, speed, runtime and temperature.

Speed Range and Runtime Limit for Glass Vessel (30% fill)

Limitations for speed and runtime at room temperature for glass vessel (30 % fill). Raised temperature reduces the stickiness. Process of changing the temperature can release the vessels from the mat. Start shaking with acclimatized vessels.

	Microplate / DeepWell	**Beaker**			
	96 x 2 ml	**25 ml**	**125 ml**	**250 ml**	**500 ml**
125 rpm	no runtime limit				
150 rpm	72 h	72 h	72 h	72 h	72 h
200 rpm	72 h	72 h	72 h	72 h	72 h
250 rpm	72 h				
300 rpm					
350 rpm					
400 rpm					

Table 54: Low Adhesion Mat - Speed Range and Runtime Limit at Room Temperature

	Microplate / DeepWell	**Erlenmeyer**							
	96 x 2 ml	**25 ml**	**125 ml**	**250 ml**	**500 ml**	**1000 ml**	**2000 ml**	**3000 ml**	**5000 ml**
125 rpm	no runtime limit								
150 rpm	72 h	72 h	72 h	72 h	72 h	72 h	72 h	72 h	72 h
200 rpm	72 h	72 h	72 h	72 h	72 h	72 h	72 h	72 h	72 h
250 rpm	72 h	72 h	72 h	72 h	72 h	72 h	72 h	48 h	24 h
300 rpm	72 h	72 h	72 h	72 h	72 h	72 h	48 h	24 h	
350 rpm	48 h	48 h	48 h	48 h	48 h	48 h	24 h		
400 rpm	24 h	24 h	24 h	24 h	24 h				

Table 55: High Adhesion Mat - Speed Range and Runtime Limit at Room Temperature

Preparation

CAUTION Always use protective goggles and gloves while handling glassware.

Before placing vessels on the adhesive mat:

1. Check vessels for damage, never use damaged vessels.
2. Wipe down the vessel with a clean and dry wipe to remove all moisture.
3. Remove all grease and other contamination.
4. Check that the vessel bottom and adhesive mat are dry and clean.

   CAUTION Even a barely visible film or single drop of water on the bottom of the vessel may cause the vessel to loose adhesion and come off the mat after a certain runtime.

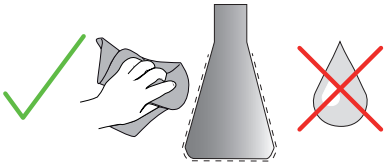

Figure 97: Adhesive Mat: Wipe Vessel Dry

5. Reduce the fill levels or seal the vessels to avoid any spillage of fluid.

   CAUTION Even if a vessel is sticking perfectly, a single drop of liquid running down on the outside wall may cause the vessel to come off the mat after a certain runtime.

Install Vessels

1. Place vessels on mat and press down.
2. Push or pull gently to ensure each vessel sticks reliably to the mat.

   NOTICE Bear in mind that condensed water may form at low temperatures or during a prolonged run, possibly causing accidental release of vessels. Sample and vessel temperature should not deviate from the specified temperature range of the shaker. For details on the possible temperature range of your shaker refer to "1. 1. Technical Data" on page 12.

Remove Vessels

1. Press the Stop button on the display window or wait for the run to end.
2. Wait for the platform to come to a complete standstill.
3. Pull neck of vessel gently and evenly to the side and wait a few seconds. Vessels with large bottom surfaces may take a few seconds to release.

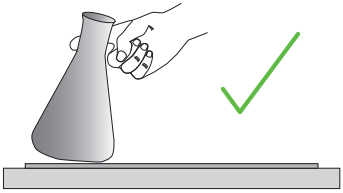

Figure 98: Adhesive Mat: Push or Pull Vessel Off Carefully

CAUTION Push or pull gently without much physical force! Vessels may come loose suddenly and spill their content!

4. If a vessel refuses to come off, pour a little water around its base.

   Allow the mat to air dry before using it again.

Remove the Mat

1. To release the adhesive mat, lift it on one side and pull it slowly away from the platform, as shown in Figure 99.

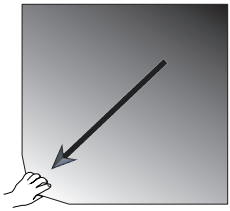

Figure 99: Adhesive Mat: Lift and Pull Mat Away to Remove

Cleaning and Disinfection

If the stickiness diminishes, clean the mat.

CAUTION Do not use any solvents, detergents or cleaning agents other than mild dishwashing soap without skin care additives. Recommended concentration is max. 2 ml of detergent per 1 liter of water.

NOTICE Direct contact of the mat with concentrated detergent reduces stickiness. In this case rinsing alone is not enough. If detergent is used directly, rinse the mat, soak it in water for 24 hours and then dry it for 24 hours to regain full adhesive power.

NOTICE Disinfect with isopropanol 70% or ethanol 70% only.

Slightly stained or dusted:

1. Wet-wipe or disinfect mats on the platform from the top side.
2. Moisten the mat.
3. Wipe residues off with a sponge.
4. Wet-wipe with a sponge soaked in clear water.
5. Disinfect if necessary.
6. Allow to dry for 24 hours.

Heavily soiled:

1. Remove mat from platform for complete cleaning.
2. Soak mat in water with diluted dishwashing soap.
3. Rub down the mat thoroughly with a sponge to remove all residues.
4. After cleaning, rinse the mat sufficiently with water.
5. Disinfect if necessary.
6. Allow to dry for 24 hours.
7. Install as explained in the section "Dry Mat Installation" on page 109 or "Wet Mat Installation" on page 109.

3. 3. 12. Gassing Manifold Installation

The gassing manifold allows for injecting an inert gas such as nitrogen or carbon dioxide into multiple vessels during shaker use (see chapter "1. 2. 12. General Accessories" on page 42 for ordering details).

The gassing manifold is a factory-installed option for Solaris 2000 I/R and 4000 I/R shakers that is also available as a customer-installed accessory when not originally installed on the unit. All Solaris 2000 I/R and 4000 I/R shakers have an access port on either side panel (see chapter "1. 4. Product Overview" on page 44 for location information) for feeding through the lab gas supply tube to the manifold assembly. The gassing manifold has one inlet fitting for the gas supply and eight outlet fittings for vessels.

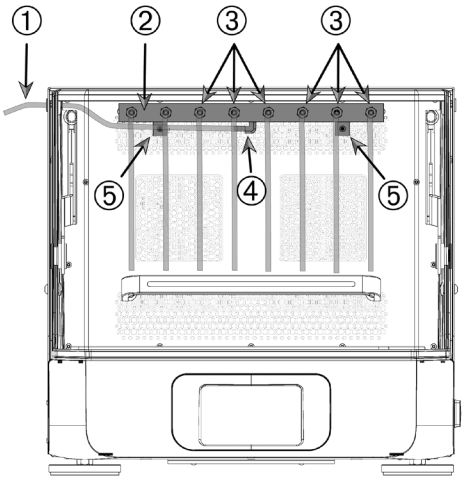

① Lab gas supply tube
② Gassing manifold assy
③ Outlet fittings with tubes
④ Inlet fitting
⑤ Fastening screws

Figure 100: Gassing Manifold Installed in Solaris 4000 R Shaker

Install as follows:

1. Securely fasten the gas manifold ② to the rear wall of the shaker's chamber with the screws ⑤ supplied.
2. Remove the plastic plug from the outer side of the access port grommet (see chapter "1. 4. Product Overview" on page 44 for location information).
3. Make a crossed incision with a cutter knife into the membrane of the rubber grommet inside the shaker chamber.
4. Cut a piece of flexible tube to a suitable length for use as the lab gas supply tube ①.

5. Attach the lab gas supply tube ① to the barbed inlet fitting ④ on the manifold.
6. Make sure that the lab gas supply tube ① stays clear of the hood levers and feed it through the access port rubber grommet to the outside.
7. Attach the lab gas supply tube ① to the gas source.
8. Cut 8 pieces of tubing and attach them to the outlets ③ of the manifold. For more than 8 vessels, use “Y” connectors; for fewer than 8 vessels, clamp off unused tubing to reduce gas loss.
9. Use appropriate plugs and seals to feed the tubes into the vessels.

3. 4. Loading and Normal Use

WARNING

Risk of fire due to triggered chemical reactions.

Do not operate the shaker at speeds that will cause the contents of vessels to be thrown out.

Increase speed slowly. Try with water before using chemicals.

CAUTION

Safety can be impaired by improper loading and damaged accessories.

- Make sure that the load (accessories and samples) is arranged symmetrically to the center of the platform. When operating a dual stack platform, make sure that the lower platform carries more load than the upper platform.
- Never overload the shaker. For maximum load refer to "Technical Data" on page 12. The load contains the weight of the platform, accessories and samples installed on the shaker.
- Make sure that the accessories are installed properly before operating the shaker. Follow the instructions in section „Accessories“ on page 90.

CAUTION

Risk of finger or hand injury by hood falling shut.

- The hood of the shaker may fall shut inadvertently and pinch or squeeze fingers or hands, causing injuries. This may happen when the hood spring is defective and unable to retain the hood in its fully open position. Do not operate the shaker with a defective hood spring. Call Thermo Fisher Scientific customer service and have the hood spring replaced immediately.

Loading

Make sure that the load, including accessories and samples, is arranged symmetrically to the center of the platform. When operating a dual stack platform and not using the complete capacity: in order to achieve best performance load preferably the bottom plate and arrange the load symmetrically to the center of the platform.

When using a temperature controlled shaker make sure that the load is postioned giving enough space when closing the hood and for proper movement with the hood closed to avoid collision and possible damage of the load.

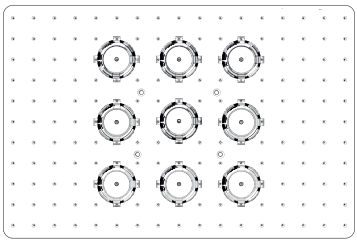

Figure 101: Example of a well loaded platform

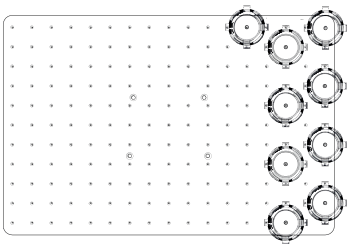

Figure 102: Example of a poorly loaded platform

NOTICE The maximum load contains the weight of the platform, accessories and samples installed on the shaker. Refer to "1. 1. Technical Data" on page 12 for details on maximum loading.

Normal Use

Information on speed-load limitation is given only as a guide to product use. Smooth operation with low or no vibration depends on multiple factors as fill level, type and condition of clamps and mats, type of vessel, arrangement of vessels on platform, the surface the shaker is placed on and on the set speed.

Whenever setting up a new or unknown combination or whenever any of these parameters change: Increase speed above 175 rpm slowly and check for unwanted load vibration or movement of the shaker. It is your responsibility to operate the shaker safely.

Solaris shakers are specially designed for low heat output and low vibration, which makes them highly suitable for use inside a range of lab equipment, including environmental chambers, incubators and lab refrigerators. Due to various specific environmental conditions including the stability of shelves and supports the user has the responsibility for safe operation when used inside any lab equipment. Increase speed slowly and check for unwanted instrument movement.

Safe Speed

The load-independent safe speed for Solaris shakers can be taken from Table 56. The load includes the weight of the platform, accessories and samples installed on the shaker. Refer to "Technical Data" on page 12 for details on maximum load.

Model	Max. Safe Speed
Solaris 2000	175 rpm
Solaris 4000	175 rpm
Solaris 2000 I	250 rpm
Solaris 2000 R	250 rpm
Solaris 4000 I	250 rpm
Solaris 4000 R	250 rpm

Table 56: Maximum safe speed

Highest Speed

At the highest speed of 525 rpm Solaris shakers can be operated with a limited load according to table Table 57. The load includes the weight of the platform, accessories and samples installed on the shaker. Consider the speed capability of applied clamps and vessels that might not be suitable for that speed.

Model	Maximum Safe Loads
Solaris 2000	3 kg
Solaris 4000	10 kg
Solaris 2000 I	4 kg
Solaris 2000 R	4 kg
Solaris 4000 I	8 kg
Solaris 4000 R	8 kg

Table 57: Maximum load at highest speed

NOTICE Always bear in mind that with rising speed clamps will start opening and deliver additional temporary vibration to the system due to greater vessel movement.

Weight-over-Speed Curves

The following weight-over-speed curves will guide you in setting up the best speed-load combination for your normal use. The green area shows speed-load combinations that cause none to minor vibration during shaking operation. The red area shows speed-load combinations that may cause strong vibration during shaking operation and can result in unwanted movement of the shaker. As these charts are for guidance only, you must pay attention when your speed-load combination comes closer to the red area.

Be aware that your specific application conditions may cause unwanted load or instrument behavior before reaching the shown borderline. Increase the speed gradually to explore the behavior of your specific load. The load contains the weight of the platform, accessories and samples installed on the shaker.

NOTICE Each blue horizontal line in the following graphs denotes the empty weight of a specific platform.

Solaris 2000

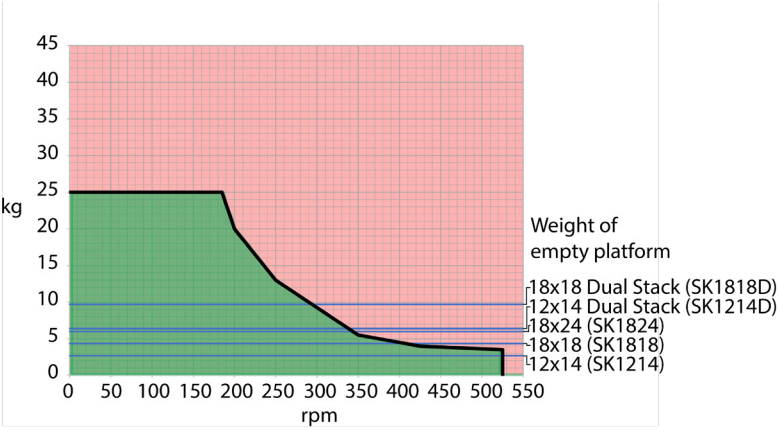

Figure 103: Solaris 2000 – Normal Use

Solaris 4000

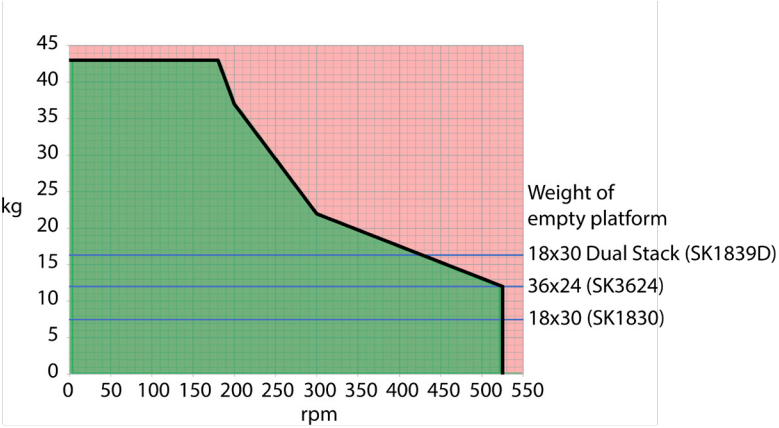

Figure 104: Solaris 4000 – Normal Use

Solaris 2000 I / 2000 R

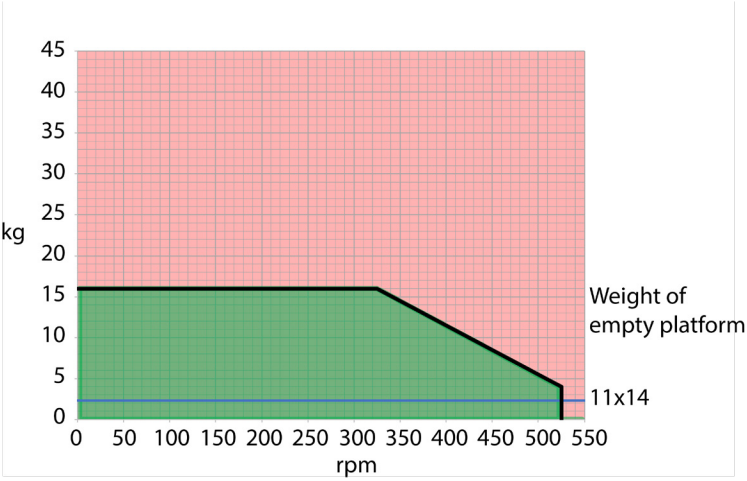

Figure 105: Solaris 2000 I / 2000 R – Normal Use

Solaris 4000 I / 4000 R

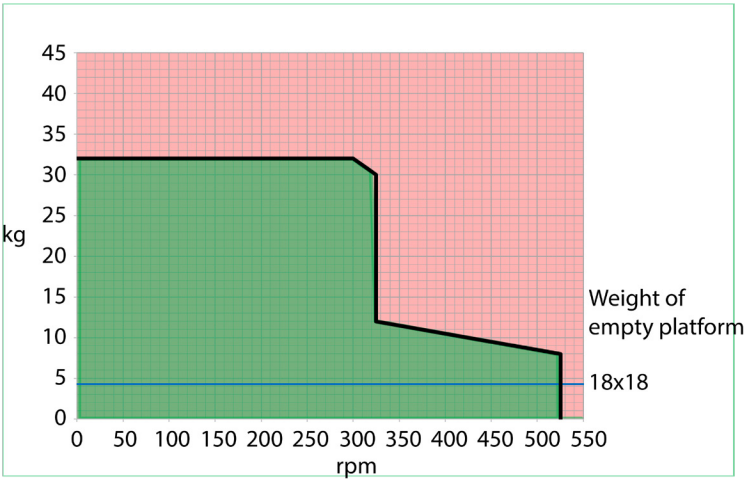

Figure 106: Solaris 4000 I / 4000 R – Normal Use

4. Maintenance and Care

WARNING

Risk from handling hazardous substances

- If shaking any hazardous materials mind the "Laboratory Biosafety Manual" of the World Health Organization (WHO) and any local regulations. When shaking microbiological samples from the Risk Group II (according to the "Laboratory Biosafety Manual" of the World Health Organization (WHO)), aerosol-tight biological seals have to be used. Look on the Internet page of the World Health Organization (www.who.int) for the "Laboratory Biosafety Manual". For materials in a higher risk group, extra safety measures must be taken.
- If toxins or pathogenic substances have contaminated the shaker or its parts, appropriate disinfection measures have to be taken ("Decontamination" on page 126; „Disinfection" on page 126).
- If a hazardous situation occurs, turn off the power supply to the shaker and leave the area immediately.

WARNING

Damage to health from infectious substances

If an accidental spill places liquids or other materials under the platform, immediately power off the shaker, unplug it, and remove the platform ("Platforms" on page 19).

Clean up the spill following your regular laboratory procedures. Use proper personal protective equipment.

Any internal adjustments or repairs must be performed by an authorized service technician. The shaker housing is not to be opened by the user.

Follow any product information supplied with the according accessory stating specific details on how to maintain and clean it properly. Use the following information within this chapter only as guideline.

4. 1. Basics

For the sake of personal, environmental, and material protection, you must clean and if necessary disinfect the shaker and its accessories on a regular basis.

Thermo Fisher Scientific recommends cleaning and manually disinfecting your laboratory shaker at least once each month. Normal indoor air contains thousands of circulating microorganisms which can take up residence in your shaker, putting your cultures at risk.

Thermo Fisher Scientific recommends using 70% ethanol, or 70% isopropanol or 10% or less quaternary ammonium based disinfectant.

NOTICE The mechanism can be damaged by entering liquids. Do not allow liquids, especially organic solvents, to get in contact with the mechanism or the mechanism bearing. Organic solvents break down the grease in the mechanisms bearing. When liquids seep into parts of the shaker that are not accessible for cleaning, do not operate the shaker and contact field service.

NOTICE Not rated procedures or agents could deteriorate the materials of the shaker and lead to malfunction. Refrain from using any other cleaning or decontamination procedure if you are not entirely sure that the intended procedure is safe for the equipment. Use only cleaning agents that will not damage the equipment. If in doubt contact the manufacturer of the cleaning agent.

NOTICE On temperature controlled shakers, make sure you leave the hood open so cleaning agents and water can evaporate.

- Pull out the power supply plug before cleaning, disinfecting or decontaminating.
- Remove installed accessories and platform(s) from shaker before cleaning, disinfecting or decontaminating.
- Use warm water with a mild detergent with a soft cloth to clean the materials. If in doubt contact Thermo Fisher Scientific. Rinse off with clean water and dry thoroughly.
- Never use caustic cleaning agents such as phosphoric acid, bleaching solutions or scrubbing powder.
- Use only disinfectants with a pH of 6–8.
- Clean up any spills immediately using a lint-free cloth dampened with a noncorrosive cleaner as instructed by the manufacturer of the cleaning agent.
- Spills can seep under the platform. If any spills get beneath the platform, uninstall the platform and clean up the spill from the pan under the platform thoroughly. Disinfect or decontaminate, if necessary.
- Check the shaker parts and remove any spilled growth media or debris.

Inspection of Accessories

NOTICE Do not run any shaker or accessories with signs of damage. It is recommend that you have accessories inspected on a regular basis as part of your routine service to ensure safety.

After thoroughly cleaning the accessories, they must be inspected for damage, wear and corrosion.

Metal Parts

In case of damage, such as corrosion, wear or cracks, the accessories must be removed from service immediately.

Plastic Parts

Check for signs of crazing, fading, bruising or cracking. In case of damage the inspected item must be removed from service immediately.

Adhesive Mats

Before each use, inspect the adhesive mats for signs of wear or damage including crazing, discoloration, yellowing, brittleness, deformation, surface abrasions or chemical attack. Immediately discard adhesive mats showing any signs of wear or damage.

4. 2. Cleaning

NOTICE Before using any cleaning methods, users should check with the manufacturer of the cleaning agents that the proposed method will not damage the equipment.

NOTICE The mechanism can be damaged by entering liquids. Do not allow liquids, especially organic solvents, to get on the mechanism or the mechanism bearing. Organic solvents break down the grease in the mechanisms bearing. Wash the exterior of the unit with a soft cloth using a solution of mild soap and water, rinse off with clean water and dry thoroughly.

Refer to "Basics" on page 124 for proper cleaning of the shaker and the used accessories.

NOTICE On temperature controlled shakers, make sure you leave the hood open so cleaning agents and water can evaporate.

Touchscreen

To clean the touchscreen:

1. Pull out the power supply plug.
2. Clean the touchscreen using a dry microfiber cloth.

3. If necessary moisten the microfiber cloth with water and wipe the touchscreen again.
4. Allow to air dry.

4. 3. Disinfection

WARNING Risk from handling hazardous substances. Do not touch infected parts. Hazardous infection is possible when touching the contaminated parts. Infectious material can get into the shaker when a vessel breaks or as a result of spills. In case of contamination, make sure that no one is put at risk. Disinfect the affected parts immediately.

NOTICE Equipment can be damaged by inappropriate disinfection methods or agents. Make sure that the disinfection agent or the method will not damage the equipment. In doubt contact the manufacturer of the disinfection agent. Observe the safety precautions and handling instructions for the disinfection agents used.

1. Wipe all parts and areas with 70% ethanol as required by the level of disinfection you need. Do not wet any areas with exposed electronics.
2. Allow to air dry.

   NOTICE On temperature controlled shakers, make sure you leave the hood open so cleaning agents and water can evaporate.

You are responsible that the level of disinfection is achieved according to your requirements.

4. 4. Decontamination

WARNING Risk from handling hazardous substances. Do not touch contaminated parts. Exposure to contamination is possible when touching the contaminated parts. Contaminated material can get into the shaker when a tube breaks or as a result of spills. In case of contamination, make sure that no one is put at risk. Decontaminate the affected parts immediately.

NOTICE Equipment can be damaged by inappropriate decontamination methods or agents. Make sure that the decontamination agent or the method will not damage the equipment. If in doubt contact the manufacturer of the decontamination agent. Observe the safety precautions and handling instructions for the decontamination agents used.

The following method is suggested by Thermo Fisher Scientific.

1. Wipe all parts and areas with 70% ethanol. Do not wet any areas with exposed electronics.
2. Allow to air dry.

NOTICE On temperature controlled shakers, make sure you leave the hood open so cleaning agents and water can evaporate.

You are responsible that the level of decontamination is achieved according to your requirements.

4. 5. Autoclaving

NOTICE Never exceed the permitted temperature and duration when autoclaving. No chemical additives are permitted in the steam.

Before autoclaving:

- Disassemble all accessories.
- Thoroughly rinse off any trace of chemicals or detergents. Include a final rinse with distilled water.

Follow this table to check autoclavability:

Item	Autoclavable	Specifications
Shaker	No	-
Platform	Yes	121 °C, 20 min
Clamp (without spring tubes)	Yes	121 °C, 20 min
Screw Driver	No	-
Microplate / DeepWell Plate Clamp	Yes	121 °C, 20 min
Adhesive Mat	No	-
Beaker Rack	Yes	121 °C, 20 min
Separatory Funnel Clamp	Yes	121 °C, 20 min
Test Tube Rack – Metal Parts	Yes	121 °C, 20 min
Test Tube Rack – Plastic Parts	No	-
Test Tube Rack – Foam Inserts	No	-
Adjustable Vessel Clamp – Metal Parts	Yes	121 °C, 20 min
Adjustable Vessel Clamp – Anti-slide Mat	No	-
Utility Tray – Metal Tray	Yes	121 °C, 20 min
Utility Tray – Rubber Mat	No	-
Adjustable Angle Test Tube Rack Holder – Metal Parts	Yes	121 °C, 20 min
Adjustable Angle Test Tube Rack Holder – Plastic Parts	No	-
Adjustable Angle Test Tube Rack Holder – Foam Inserts	No	-

Table 58: Autoclavability of materials

Make sure that the necessary sterility is achieved according to your requirements.

Appearance and color may change slightly after autoclaving.

4. 6. Temperature Calibration

The temperature setpoint of a temperature controlled shaker can be calibrated against a temperature measuring device of known accuracy to ensure full reproducibility of the incubated or refrigerated shaking process.

4. 6. 1. Temperature Calibration Best Practices

Before and while running temperature calibration on the shaker, make sure you follow the instructions exactly. Any disturbance or deviation from the recommended best practices may prevent the sample temperature from stabilizing and cause the calibration run to fail.

Best practices include:

- Use a flask with a volume of 250 ml.
- Fill the flask with exactly 100 ml of water.
- Close the hood completely and keep it closed throughout the entire calibration run.
- Allow enough time to pass to ensure that the sample temperature has fully stabilized.
- Do not allow the environmental conditions such as temperature and humidity to change during the calibration run. Even small changes, such as opening a door or window or changing the settings of the air conditioning system, may compromise the result of the ongoing calibration process.
- It is recommended to calibrate your shaker on a yearly basis.

4. 6. 2. Temperature Calibration Procedure

Proceed as follows to calibrate:

1. You can launch calibration in three alternative ways:
   - » At the end of the initial startup process described in "Initial Startup" on page 55, you have the option of running the temperature calibration instead of exiting from the initial startup process.
   - » The shaker displays a reminder to calibrate on a yearly basis.
   - » You can then launch calibration by tapping the **Settings** icon from the menu bar, followed by the **Calibration** button further down on the **Temp Calibration** screen that appears.
   - » You can tap the **Settings** icon from the menu bar, followed by the **Calibration** button to launch the process at any time whenever the need arises.

   NOTICE The calibration reminder can be disabled using the **Disable Calibration Notifications checkbox** in the **Settings** screen.

2. Wait for the **Temp Calibration** screen shown in Figure 107 to appear.

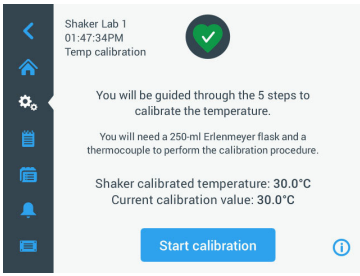

Figure 107: Calibration: Start screen

3. Tap the **Start Calibration** button to get started.

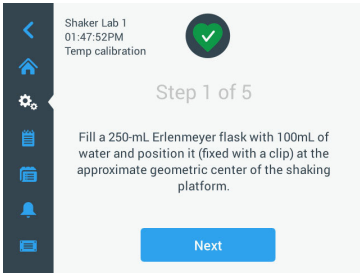

Figure 108: Calibration: Prompt for filling Erlenmeyer flask

4. Follow the instructions on the screen: Fill the 250 ml Erlenmeyer flask with 100 ml of water.
5. Install the flask in a clamp and secure the clamp at the approximate center of the shaking platform.
6. Suspend the probe of a temperature measuring device of known accuracy into the flask. The probe should be submerged in the liquid but not in contact with the bottom or sides of the flask.
7. Seal the flask to avoid spilling of liquid.
8. Close the hood over the shaking platform.

9. Tap the **Next** button to continue.

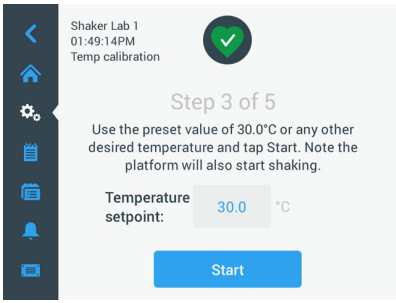

Figure 109: Calibration: Prompt for starting calibration

NOTICE The shaker starts shaking immediately as soon as you tap the **Start** button.

10. Follow the instructions on the screen: Tap the **Start** button to use the preset temperature, or tap the **Temperature Setpoint** field and enter any other desired temperature before tapping the **Start** button.

    The screen shows how the shaker chamber is heated (or cooled) to the selected calibration temperature.

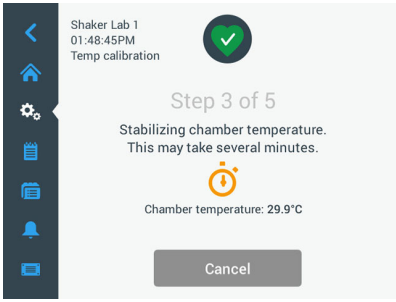

Figure 110: Calibration: Chamber stabilizing to calibration temperature

11. Wait at least two and a half hours (150 minutes) for the chamber temperature measurement to reach a stable state.

    A stable state is indicated by the message **Chamber temperature has stabilized**, as shown in Figure 111 below.

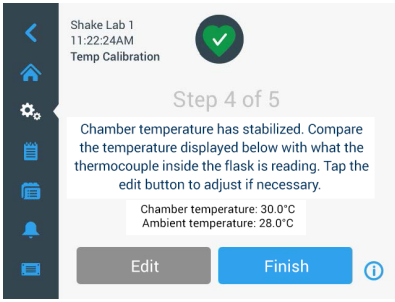

Figure 111: Calibration: Chamber successfully stabilized to calibration temperature

12. Follow the instructions on the screen:

    » As soon as the screen shown in Figure 111 is shown, compare the temperature reading of your thermocouple regularly. If you deem the temperature stable you can either tap the **Edit** button to correct or tap the **Finish** button to complete the calibration process.

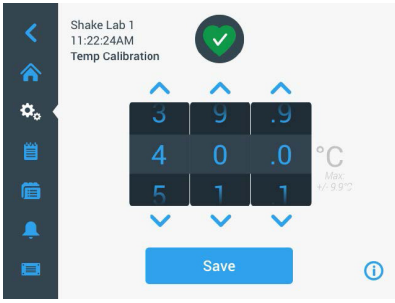

Figure 112: Calibration: Correct temperature displayed by shaker

13. Using the wheel picker that appears, correct the temperature displayed by the shaker to the reading of the accurate measuring device.
14. Tap the **Save** button to have your changes registered.

15. The **Temperature calibration complete** message indicates that the process has been successfully completed.

Figure 113: Calibration: Temperature calibration successfully completed

You may tap **Re-Calibrate** to repeat the calibration process.

4. 6. 3. Temperature Calibration Lookup

You may look up the current calibration temperature at any time:

1. Tap the **Settings** icon from the menu bar, followed by the **Calibration** button further down on the **Temp Calibration** screen that appears
2. The **Temp Calibration** screen shown in Figure 107 appears. That screen shows the current **Shaker Calibrated Temperature**.

   NOTICE Alternatively, temperature controlled shakers let you look up the calibration temperature in the screen where you set the temperature. An example is shown in the section "Set Temperature" on page 65.

4. 7. Firmware Installation

Tapping the Firmware button from the Files and Info screen (see "Files and Info" on page 79) requests you to enter the aministrator passcode, then opens the Firmware screen shown in Figure 114. This screen lets you install new firmware from an USB memory stick.

You may receive a download link for new firmware from your field service technician, depending on your service agreement. Be sure to install firmware from authorized sources only. Software from non-authorized sources may void the warranty granted by Thermofisher Scientific.

1. Download the ZIP file from the link provided to you by your field service technician.
2. Extract the ZIP file to a **blank** USB drive.

   NOTICE Make sure the USB drive has sufficient space to allow the ZIP file to be extracted.

3. If still running, stop the shaker by pressing the **Stop** button on the display window.
4. Acknowledge any alarms that may be present, as explained in the section "Status" on page 67.

   NOTICE If you try to upgrade while the shaker is running, you will receive a message saying that **An upgrade of the shaker is not allowed while the shaker is actively shaking.** That message has a **Stop Shaker** button to let you exit and carry out the upgrade.
5. Tap the **Files and Info** icon from the navigation bar.
6. Scroll the **Files and Info** screen all the way down to reveal the **Firmware** button.
7. Tap the **Firmware** button to open the Firmware screen showing the currently installed firmware versions.
8. Insert the USB drive into any of USB port of the shaker. The location of the USB ports can be taken from the section "Product Overview" on page 44.
9. Enter the administrator passcode.

Figure 114: Firmware Screen

10. Tap the **Upgrade Firmware** button.

    NOTICE If the shaker cannot find a USB drive, you will be prompted to **Please insert a USB stick with the firmware you like to install to begin the upgrade.** Insert the USB drive now or check whether it is properly plugged into the USB port and corrrect the problem.

11. If there is firmware to upgrade, the itemized list shown in Figure 115 appears in the Firmware Upgrade screen. Tap on the firmware item you wish to upgrade.

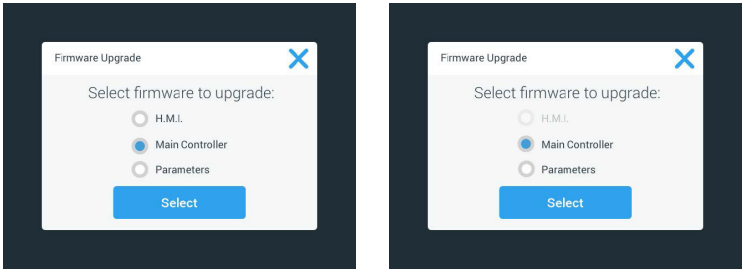

Figure 115: Select Firmware Item to Install

NOTICE Firmware items that are up to date are grayed out and not selectable. If there are no items to update at all, you will receive a message saying that **There are no new upgrades for the software at this time.**

12. Tap **Select**.
13. If the memory stick contains more than one firmware version, you will be asked to choose one. Tap to select a firmware version, then tap **Select**.

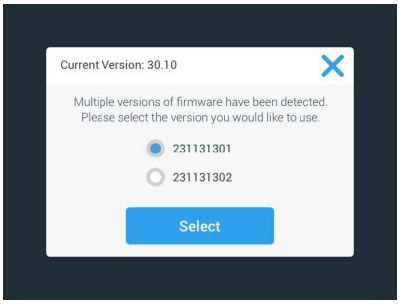

Figure 116: Select Firmware Version for Install

NOTICE If you are in doubt about which version to install, please consult the field service technician who supplied the download link.

14. A list of the items to be upgraded appears. Tap **OK** to start upgrading.

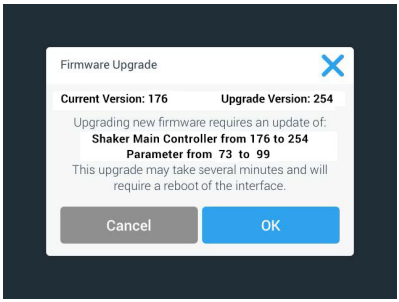

Figure 117: List of Items to be Upgraded

NOTICE The GUI handles mutual dependencies for you: You select one firmware item for updating and the software automatically adds all required items to the install.

NOTICE If you select the H.M.I. option from the list shown in Figure 115 to upgrade the GUI firmware only, the GUI display will not respond to any further tapping on the touchscreen's active area for up to one minute after you have started the firmware upgrade. Please do not power off the shaker during this period, otherwise the upgrade will not be completed successfully. The shaker will restart after a short time and then be ready for use again.

NOTICE In the event that you select two or three options from the list shown in Figure 115 to upgrade multiple firmware components in one go, the shaker must not be powered off at any time during the entire upgrade process.

15. Various messages appear to inform you about the progress of the installation, as shown in Figure 118.

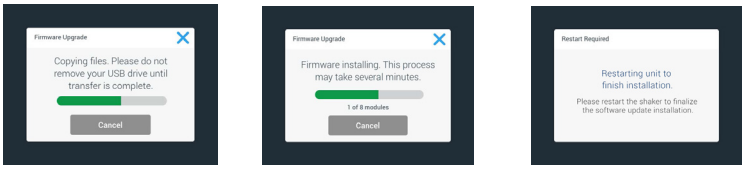

Figure 118: Firmware Upgrade Install Messages

16. When you receive the prompt to restart the shaker, turn the unit off and back on using the power switch.

4. 8. Platform Replacement

The basic procedure for installing a platform is outlined in chapter "3. 3. 1. Platform Installation" on page 91. A full list of spare platforms for each shaker appears in the section "1. 2. 1. Platforms" on page 19.

NOTICE Temperature controlled shaker models may only be operated with the factory pre-installed platforms.

4. 9. Service

Thermo Fisher Scientific recommends having the shaker and accessories serviced once per year by an authorized service technician. The service technician checks the following:

- electrical equipment
- suitability of set-up site
- safety system
- used accessories
- fixation of clamps and platforms and other accessories on the shaker

Before service, shaker and accessories should be thoroughly cleaned and decontaminated to ensure that full and safe inspection can be completed.

Thermo Fisher Scientific offers inspection and service contracts for this work. Any necessary repairs are performed for free during the warranty period and afterwards for a charge. That is only valid if the shaker has been maintained by an authorized Thermo Fisher Scientific customer service technician.

4. 10. Shipping and Disposal

WARNING Damage to health from infectious substances. When removing the shaker and accessories from use for disposal you have to clean and if necessary disinfect or decontaminate them. If in doubt contact the Thermo Fisher Scientific customer service.

For the disposal of the shaker mind the regulations in your country. Contact the Thermo Fisher Scientific Customer Service for the disposal of the shaker. For contact information check the back page of this manual or visit www.thermofisher.com.

Mind the information on transport and shipping ("Transporting" on page 52, "Shipping" on page 60).

5. Troubleshooting

No.	Description	Solutions	Icon
Errors			
1...1999	An internal error occurred	An internal error occurred. Please power-cycle the unit by switching the power switch off and back on. If the error message still shows, contact a service technician.	
Alerts			
3	Temperature calibration due. It has been 1 year.	The one-year validity period has expired. Renew the temperature calibration as explained in the section "4. 6. Temperature Calibration" on page 128.	
4	Power resumed and autostart enabled.	A power outage has occurred during the last run. After power has returned the run has been resumed automatically.	
6	Ambient temperature sensors failed.	The temperature measured by the ambient temperature sensor is implausible.	
10	Speed for Fan 1 above limit.	Speed for Fan 1 is above plausibility threshold.	
11	Speed for Fan 2 above limit.	Speed for Fan 2 is above plausibility threshold.	
12	Speed for Fan 3 above limit.	Speed for Fan 3 is above plausibility threshold.	
13	Speed for Fan 4 above limit.	Speed for Fan 4 is above plausibility threshold.	
20	Hood has been open for a longer period of time.	Please close the shaker hood to preserve the chamber temperature.	
Alarms			
1	High temperature alarm	The chamber temperature has exceeded the upper alarm level. Please check your samples, environmental conditions, and/or change your settings.	
2	Low temperature alarm	The chamber temperature has exceeded the lower alarm level. Please check your samples, environmental conditions, and/or change your settings.	
3	Autorestart after power outage failed	A power outage has occurred during the last run. Auto restart could not be executed successfully.	

No.	Description	Solutions	Icon
5	Drive acceleration too slow. Desired set speed cannot be reached.	The desired set speed could not be reached within time. Please check your settings and/or load (accessories and samples) on the platform.	
7	Speed measurement on Fan 1 reports unexpected standstill.	Please power-cycle the unit. If the error message persists, call a service technician.	
8	Speed measurement on Fan 2 reports unexpected standstill.	Please power-cycle the unit. If the error message persists, call a service technician.	
9	Speed measurement on Fan 3 reports unexpected standstill.	Please power-cycle the unit. If the error message persists, call a service technician.	
10	Speed measurement on Fan 4 reports unexpected standstill.	Please power-cycle the unit. If the error message persists, call a service technician.	
12	Drive start up error - no speed signal received.	Shaker platform is blocked. Please check if enough space is available around platform and/or reduce load (accessories and samples) on platform. Afterwards press START again on the shaker. If the error message persists, contact a service technician.	
24	Speed measurement error during a run	Abnormal speed change detected. Please check load (accessories and samples) and/or clamps on the shaker platform. Afterwards press START again on the shaker. If the error message persists, contact a service technician.	
26	Speed measurement detected unexpected standstill during run.	Make sure that there is enough space is available around the platform and/or reduce load (accessories and samples) on the platform. Make sure that the fuse on the back of the shaker has not tripped ("Fuse" on page 47). Afterwards press START again on the shaker. If the error message persists, contact a service technician.	
82	Motor current measurement detects overload	Motor overcurrent detected. Do not load or unload platform while running. Reduce speed or adjust load (accessories and samples) on platform.	
83	Motor current measurement out of boundaries	Motor overcurrent detected. Do not load or unload platform while running. Reduce speed or adjust load (accessories and samples) on platform.	

Table 59: List of Errors, Alerts and Alarms

NOTICE If an error message shows that is not listed in this table, contact a service technician.

GPL (General Public License)

Parts of the device software use open source software published under GPL, LGPL or another open source license. In detail, these are the libraries listed in the table. Where provided by the relevant license, the source code of the libraries used (third party libraries) can be obtained from Thermo Fisher Scientific. The respective license terms of the open source software used are part of the source code package provided.

Third Party Libraries

Library	Version	Deployment via	License
Qt	5.8	BSP	LGPLv3
Log4Cplus	1.2.0	Application	Apache Public License v2 / Two clause BSD license
boost	1.72.0	Application	Boost License 1.0
json11	1.0.0	Application	MIT License

---

https://www.gnu.org/licenses/lgpl-3.0.de.html

https://www.gnu.org/licenses/lgpl-3.0.en.html

Index

A

Accessories 18, 90
Adhesive Mat Installation and Use 108
Adjustable Angle Test Tube Rack Holder Installation 99
Adjustable Vessel Clamp Installation 101
Alarms 71
Alerts 71
Autoclaving 127
Auto Restart 75

B

Beaker Rack Installation 103
Brightness 75

C

Care 123
Charts 88
Cleaning 125
Connections 46
Controls 75

D

Decontamination 126
Directives 43
Disinfection 126
Display 75
Disposal 136
Dual Stack 93

E

Ethernet 47
Event Log 86

F

Files and Info 79
Flask Clamp and Vessel Installation 94
Fuse 47

G

Gassing Manifold Installation 115
GPL (General Public License) 140

H

Highest Speed 120

I

Inspection of Accessories 125
Intended Use 5
Items Supplied 49

L

Language 76
Loading 117
Location 50

M

Mains Connection 47
Maintenance 123
Menu Bar Customization 78
Metal Parts 125
Microplate / DeepWell-Plate 100

N

Normal Use 117, 119

O

Operation 61

P

Plastic Parts 125
Platform Installation 91
Platforms 19
Product Overview 44
Programs 80

R

Region 77

S

Safe Speed 119
Separatory Funnel Clamp Installation 104
Service 128
Settings 70
Shipping 60, 136
Signal Words and Symbols 6
Sleep Mode 77
Snooze Timeout 71, 72
Speed Setpoint 65, 66, 75
Square Clamp Installation 96
Standards 43
Startup 55
Symbols used in the Instruction Manual 7

T

Technical Data 12
Technical Specifications 12
Temperature Calibration 128
Test Tube Rack Installation 98
Time 77
Time Mode 75
Transporting 52
Troubleshooting 137

U

Unit Name 78
Universal Platforms 92
USB 48
User Interface 61
Utility Tray Installation 107

V

Volume 71, 74

thermoscientific

en

Manufactured for

Thermo Electron LED GmbH

Zweigniederlassung Osterode

Am Kalkberg, 37520 Osterode am Harz

Germany

Country of Origin: USA

Thermo Scientific Solaris 2000	Thermo Scientific Solaris 4000
Thermo Scientific Solaris 2000 I	Thermo Scientific Solaris 4000 I
Thermo Scientific Solaris 2000 R	Thermo Scientific Solaris 4000 R

70900190 is the original instruction manual.

thermofisher.com/shaker

© 2019–2023 Thermo Fisher Scientific Inc. All rights reserved.

All trademarks are the property of Thermo Fisher Scientific Inc. and its subsidiaries unless otherwise indicated. Not all products are available in all countries. Please consult your local sales representative for details.

Shown pictures within the manual are examples and may differ considering the set parameters and language.

Australia
+61 39757 4300

Austria
+43 1 801 40 0

Belgium
+32 53 73 42 41

China
+800 810 5118
or +400 650 5118

France
+33 2 2803 2180

Germany national toll free
0800 1 536 376

Germany international
+49 6184 90 6000

India
+91 22 6716 2200

Italy
+39 02 95059 552

Japan
+81 3 5826 1616

Netherlands
+31 76 579 55 55

New Zealand
+64 9 980 6700

Nordic/Baltic/CIS countries
+358 10 329 2200

Russia
+7 812 703 42 15

Spain/Portugal
+34 93 223 09 18

Switzerland
+41 44 454 12 12

UK/Ireland
+44 870 609 9203

USA/Canada
+1 866 984 3766

Other Asian Countries
+852 2885 4613

Countries not listed
+49 6184 90 6000

ThermoFisher SCIENTIFIC