# Model 3881, 3883, 3887 and 3889

**Forma Blood Bank Refrigerators**

Operating and Maintenance Manual 7033881 Rev. 1

Thermo
SCIENTIFIC

## MANUAL NUMBER 7033881

| REV | ECR/ECN | DATE | DESCRIPTION | By |
|---|---|---|---|---|
| 1 | IN-3285 | 5/15/06 | Revised refrigeration schematic | aks |
| 0 | IN-3285 | 4/27/06 | Release 6 (models 3881 and 3889) | aks |

**Important** Read this instruction manual. Failure to read, understand and follow the instructions in this manual may result in damage to the unit, injury to operating personnel, and poor equipment performance. ▲

**Caution** All internal adjustments and maintenance must be performed by qualified service personnel. ▲

Material in this manual is for information purposes only. The contents and the product it describes are subject to change without notice. Thermo Scientific makes no representations or warranties with respect to this manual. In no event shall Thermo be held liable for any damages, direct or incidental, arising out of or related to the use of this manual.

©2003 Thermo Scientific. All rights reserved.

Important operating and/or maintenance instructions. Read the accompanying text carefully.

Potential electrical hazards. Only qualified persons should perform procedures associated with this symbol.

Equipment being maintained or serviced must be turned off and locked off to prevent possible injury.

Hot surface(s) present which may cause burns to unprotected skin, or to materials which may be damaged by elevated temperatures.

Potential biological hazards - proper protective equipment and procedures must be used when following instructions associated with this symbol. Reference O.S.H.A. Regulation 1910-1030.

Marking of electrical and electronic equipment, which applies to electrical and electronic equipment falling under the Directive 2002/96/EC (WEEE) and the equipment that has been put on the market after 13 August 2005.

This product is required to comply with the European Union's Waste Electrical & Electronic Equipment (WEEE) Directive 2002/96/EC. It is marked with the WEEE symbol. Thermo Scientific has contracted with one or more recycling/disposal companies in each EU Member State European Country, and this product should be disposed of or recycled through them. Further information on Thermo's compliance with this directive, the recyclers in your country and information on Thermo products will be available at www.thermo.com.

- ✔ Always use the proper protective equipment (clothing, gloves, goggles, etc.)
- ✔ Always dissipate extreme cold or heat and wear protective clothing.
- ✔ Always follow good hygiene practices.
- ✔ Each individual is responsible for his or her own safety.

## Do You Need Information or Assistance on Thermo Scientific Products?

If you do, please contact us 8:00 a.m. to 6:00 p.m. (Eastern Time) at:

| | |
|---|---|
| 1-740-373-4763 | Direct |
| 1-888-213-1790 | Toll Free, U.S. and Canada |
| 1-740-373-4189 | FAX |
| http://www.thermo.com | Internet Worldwide Web Home Page |
| services.controlenv@thermo.com | Service E-Mail Address |

Our **Sales Support** staff can provide information on pricing and give you quotations. We can take your order and provide delivery information on major equipment items or make arrangements to have your local sales representative contact you. Our products are listed on the Internet and we can be contacted through our Internet home page.

Our **Service Support** staff can supply technical information about proper setup, operation or troubleshooting of your equipment. We can fill your needs for spare or replacement parts or provide you with on-site service. We can also provide you with a quotation on our Extended Warranty for your Thermo Scientific products.

Whatever Thermo Scientific products you need or use, we will be happy to discuss your applications. If you are experiencing technical problems, working together, we will help you locate the problem and, chances are, correct it yourself...over the telephone without a service call.

When more extensive service is necessary, we will assist you with direct factory trained technicians or a qualified service organization for on-the-spot repair. If your service need is covered by the warranty, we will arrange for the unit to be repaired at our expense and to your satisfaction.

Regardless of your needs, our professional telephone technicians are available to assist you Monday through Friday from 8:00 a.m. to 6:00 p.m. Eastern Time. Please contact us by telephone or fax. If you wish to write, our mailing address is:

Thermo Scientific
Controlled Environment Equipment
401 Millcreek Road, Box 649
Marietta, OH 45750

International customers, please contact your local Thermo Scientific distributor.

# Table of Contents


**Section 1 Receiving . . . . . 1 - 1**

Preliminary Inspection . . . . . 1 - 1
Visible Loss or Damage . . . . . 1 - 1
Responsibility for Shipping Damage . . . . . 1 - 1

**Section 2 Installation and Start-Up . . . . . 2 - 1**

Location and Installation . . . . . 2 - 2
Preparing the Performance Monitor/Alarm . . . . . 2 - 2
Connecting the back-up battery . . . . . 2 - 2
Connecting to Power . . . . . 2 - 4
Connecting RS-232 Communications . . . . . 2 - 4
RS-232 data format . . . . . 2 - 4
Connecting the Remote Alarm Relay . . . . . 2 - 4
Connecting the Under and Over Temp Relays . . . . . 2 - 5
Installing the Temperature Probes . . . . . 2 - 7
Liquid temperature measurement . . . . . 2 - 7
Preparing the CoBex Chart Recorder . . . . . 2 - 7
Installing the chart recorder battery . . . . . 2 - 7
Installing the chart paper . . . . . 2 - 7
Replacing the pen . . . . . 2 - 7
Changing the recorder range . . . . . 2 - 7
Calibrating the chart recorder . . . . . 2 - 8

**Section 3 Operation . . . . . 3 - 1**

Operating the Performance Alarm/Monitor . . . . . 3 - 1
Reading the Real-time Refrigerator Conditions . . . . . 3 - 2
Setting the High and Low Temp Alarm Setpoints . . . . . 3 - 2
Setting the Month, Day, and Time . . . . . 3 - 2
Interpreting the Alarm Information . . . . . 3 - 5
Calibrating the Temp Probes . . . . . 3 - 6
Overtemp and Undertemp Alarm Test . . . . . 3 - 6
If the probe tests fail . . . . . 3 - 7
Silencing the Audible Alarm . . . . . 3 - 7
Testing the Performance Alarm Battery . . . . . 3 - 7

**Section 4 Maintenance . . . . . 4 - 1**
Cleaning . . . . . 4 - 1
Interior . . . . . 4 - 1
Condenser . . . . . 4 - 1
Door Gasket . . . . . 4 - 1
Drawer Removal and Installation . . . . . 4 - 1

**Section 5 Troubleshooting and Service . . . . . 5 - 1**

**Section 6 Specifications . . . . . 6 - 1**

**Section 7 Spare Parts . . . . . 7 - 1**

**Section 8 Refrigeration Schematics . . . . . 8 - 1**

**Section 9 Electrical Schematics . . . . . 9 - 1**

**Section 10 Warranty Information**

# Section 1 Receiving

## Preliminary Inspection

This laboratory refrigerator was thoroughly inspected and carefully packed prior to shipment. All necessary precautions were taken to ensure safe arrival. Immediately upon receipt, before the unit is moved from the receiving area, carefully examine the shipment for loss or damage. Unpack the shipment and inspect both interior and exterior for any in-transit damage.

## Visible Loss or Damage

If any loss or damage is discovered, note any discrepancies on the delivery receipt. Call the delivering carrier and request that their representative perform an inspection. Do not discard any of the packing material and do not move the shipment from the receiving area.

## Responsibility for Shipping Damage

For products shipped F.O.B. Marietta, Ohio, the responsibility of Thermo Scientific ends when the merchandise is loaded onto the carrier's vehicle.

On F.O.B. Destination shipments, Thermo's and the carrier's responsibility ends when your Receiving Department personnel sign a free and clear delivery receipt.

Whenever possible, Thermo will assist in settling claims for loss or in-transit damage.

# Section 2 Installation and Start-Up

Models 3881/3883 (120V, 60Hz) and 3887/3889 (230V, 50Hz) are Blood Bank Refrigerators with built-in, over/under temperature alarm systems and 7-day chart recorders as required by regulatory agencies for whole blood storage. The Blood Bank Refrigerator provides consistent, reliable protection of products at a safe 4°C.

The refrigerators feature adjustable stainless steel drawers that roll out for easy access to inventory, high visibility glass doors and fluorescent lights to provide unrestricted inventory viewing, plus an oversized refrigeration system giving quick temperature recovery for maximum product protection after door openings.

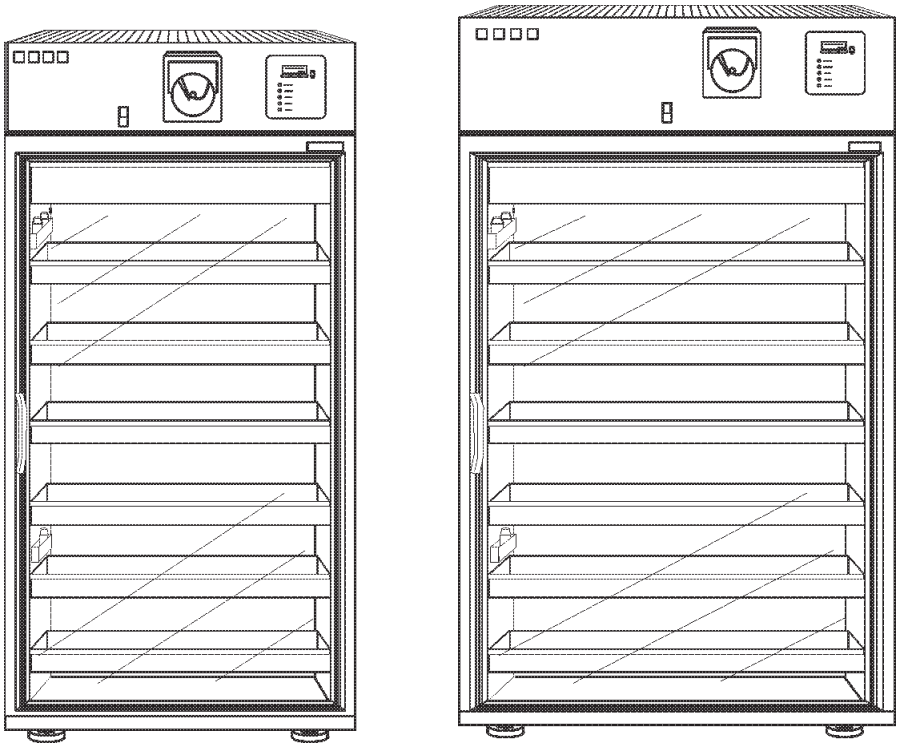

**Figure 2-1.** Blood Bank Refrigerators Models 3881/3889/3883/3887

## Location and Installation

Locate the refrigerator on a level surface in an area of 23°C, ±5° ambient temperature fluctuation.

Allow eight (8) inches of clearance above the cabinet and three (3) inches of clearance at the back and sides of the refrigerator. This space is necessary to allow adequate airflow around the refrigeration system.

For better cabinet stability when the drawers are extended, adjust the leveling feet so that the front of the cabinet is about 1/4” higher in the front.

## Preparing the Performance Monitor/Alarm

The Performance Alarm/Monitor (Figure 2-2) is a standard feature on Blood Bank Refrigerators. Operating procedures for the monitor are located in Section 3 of this manual.

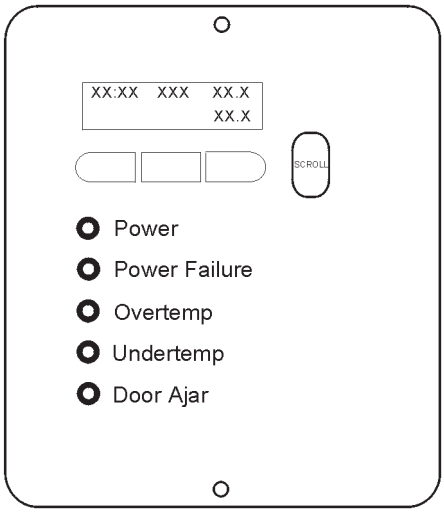


**Figure 2-2.** Performance Alarm/Monitor Control Panel

## Connecting the Back-up Battery

To assure continued monitoring during a power outage or if the refrigerator is intentionally unplugged, a back-up battery is on the printed circuit board (part number 400116). Refer to Figure 2-4.

**Note** This battery is shipped in the Performance Alarm/ Monitor and must be connected before connecting the unit to AC power. ▲

## Connecting the Back-up Battery (continued)

To access the circuit board, pull outward on the two small, black plastic pins at the top and bottom of the alarm/monitor control panel. (Refer to Figure 2-3.) A noticeable "click" signals that they have released. The battery pack is attached by hook and loop material directly behind the liquid crystal display.

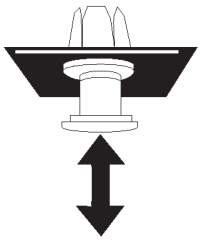

**Figure 2-3.**

Plug the wires into the battery connector on the circuit board, shown as item A in Figure 2-4.

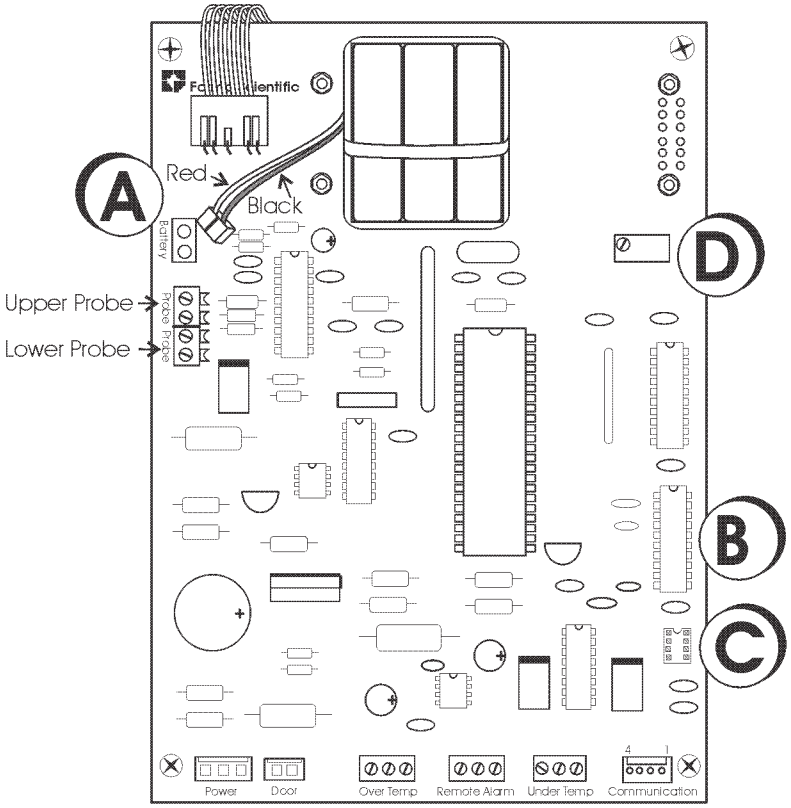


**Figure 2-4.** Circuit Board Component Locations

If the battery pack is not plugged in, the liquid crystal display will show all black when the refrigerator is turned on.

The circuit board is replaced by inserting the plastic pins completely into their holes and pushing the top of the fastener inward until it "clicks."

The battery pack is recyclable and should be disposed of accordingly.

## Connecting to Power

Connect the unit to an adequate dedicated power supply. Refer to the electrical data plate for exact electrical specifications.

## Connecting RS-232 Communications

RS-232 data from the Alarm/ Monitor circuit board is provided by a RJ-11 telephone style connector located on the back of the cabinet. Refer to Figure 2-5 for pin identification and Figure 2-10 for connector location.

### RS-232 data format

Temperature data is transmitted once every hour in a 20-bit format, with 17 bits displayed on the terminal screen. The format first provides the temperature (-)XX.X C, then OVER, UNDER, or (blank). Blank denotes the temperature is within the upper and lower setpoints.

Sending an ASCII XON (DC1 (“11” hexadecimal) command to the RS-232 enables this transmission, sending XOFF (DC3 (“13” hexadecimal) stops it.

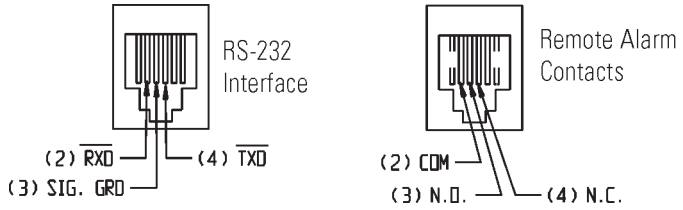


**Figure 2-5.** RS-232 and Remote Alarm Contacts

## Connecting the Remote Alarm Relay

The remote alarm relay may be wired to a central remote alarm location or to an independent alarm system.

Connection to the refrigerator is through an RJ-11 terminal block located on the back of the cabinet. Pin identifications are shown in Figure 2-5.

**IMPORTANT USER INFORMATION**

**Caution! Stored product should be protected by an activated alarm system capable of initiating a timely response 24 hours/day. Alarms provide interconnect for centralized monitoring.**

## Connect the Remote Alarm Relay (cont.)

A modular-to-modular cable (Stock No. 190388) and a RJ-11 telephone style terminal converter (Stock No. 190392) or equivalent may be used to convert remote alarm output to a screw terminal connection. Refer to Figure 2-6.

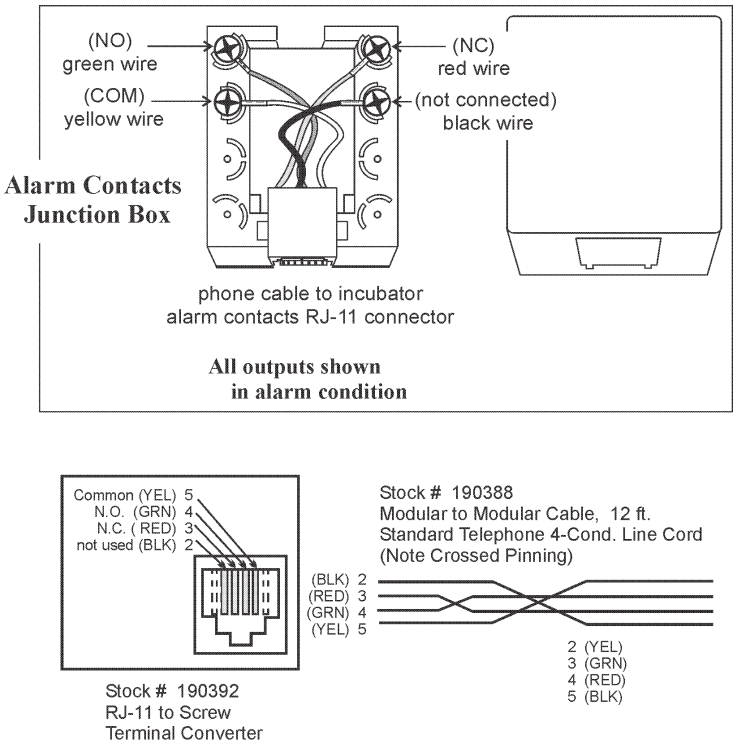


**Figure 2-6.** Terminal Conversion

## Connecting the Under and Over Temp Relays

**Note** These connections should only be made by some one familiar with circuit boards. Proper grounding and connecting procedures must be followed. ▲

Separate under and over temperature relays with Normally Open and Normally Closed contacts are also part of the Alarm/Monitor design. However, these contacts must be wired directly to the circuit board. Figure 2-7 identifies the connector blocks mounted along the bottom edge of the board.

## Connect Under/Over Temp Relays (cont.)

A hole with grommet is located on the rear of the cabinet adjacent to the RJ-11 connectors to allow for passing through the alarm system wiring.

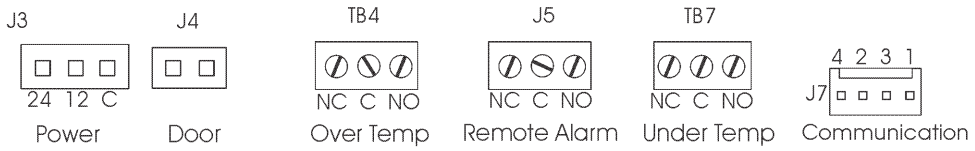


**Figure 2-7.** Under and Over Temp Relays

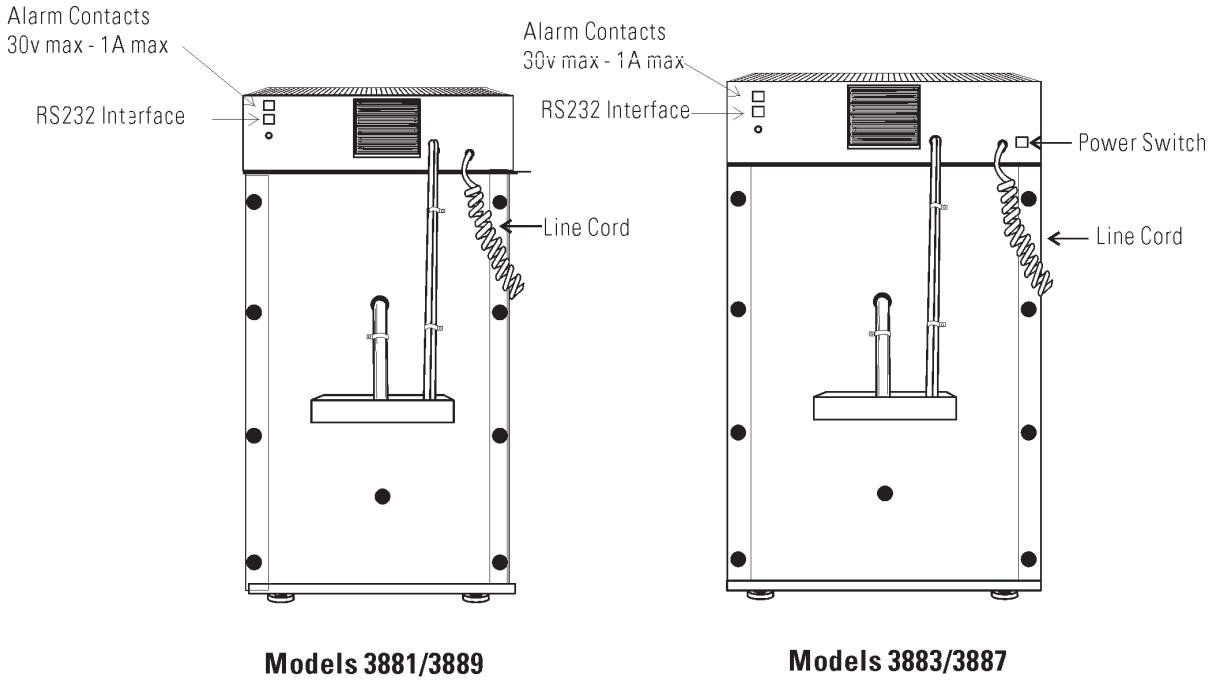


**Figure 2-8.** RS232 and Remote Alarm Location

## Installing the Temperature Probes

The temperature probes are located on the left inside wall of the cabinet. Refer to Figure 2-9.

The probe bottles are secured in the brackets. The top bracket location is for the upper chamber and the recorder probes. The lower bottle location is used for the lower chamber probe.

The temperature probe connectors on the circuit board are identified in the area marked "A" in Figure 2-4.

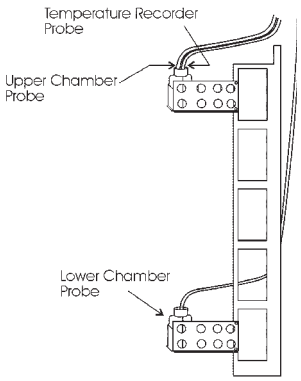


**Figure 2-9.** Temperature Probe Location

### Liquid temperature measurement

For liquid temperature measurements, the bottles are filled with propanol, or a 250-ml solution of 10 parts water and 1 part glycerol. The probes must extend at least two inches into the solution and the bottle cap must fit tightly to minimize evaporation.

## Preparing the CoBex Chart Recorder

The seven-day circular chart recorder is located on the top front of the refrigerator cabinet and is protected by a glass door.

### Installing the chart recorder battery

To prepare the recorder for operation, open the glass door and snap the connector onto the 9-volt battery as shown in Figure 2-10. If the refrigerator is operating, the green LED will show a steady light. If the refrigerator is not turned on, the LED will flash.

**Note** If the battery is weak or not connected, the green LED will flash. If power is lost to the cabinet, the LED will also flash as the refrigerator goes into the alarm state. ▲

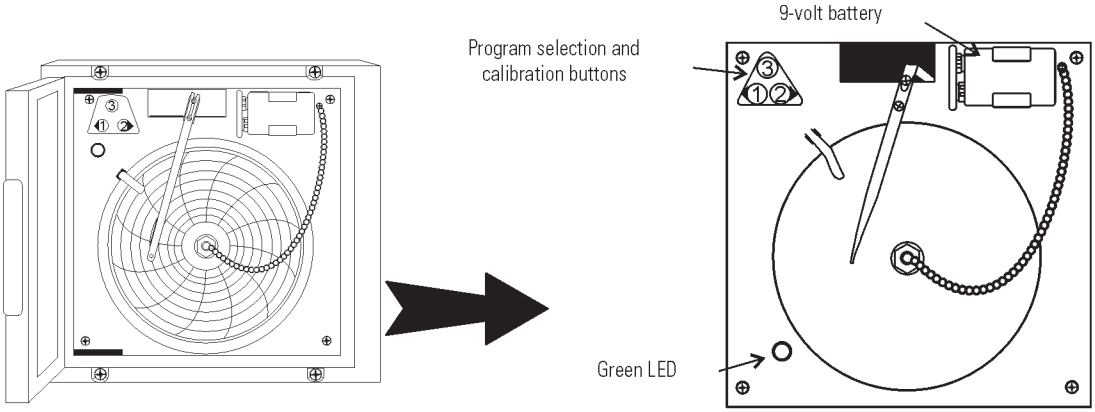


**Figure 2-10.** Chart Recorder

## Installing the chart paper

(Refer to Figure 2-11) Press and hold button #3 for about one second until the pen begins to move to the left. Unscrew the knob at the center of the chart and install the paper, positioning the chart so the correct time line coincides with the time line groove on the chart plate.

Replace the knob and press the #3 button until the pen begins to move to the right.

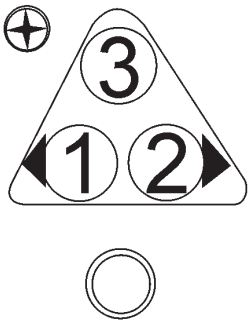


**Figure 2-11**

## Replacing the pen

Replacement pens may be ordered from Technical Services department. To change the pen:

1. Using a small flat blade screwdriver, loosen the 2 screws holding the pen arm and remove the pen and arm as an assembly.

2. Install the new pen assembly by sliding the inkless pen arm under the screws, positioning the pen tip in the time line groove. Tighten the screws.

3. Push the Chart Change button and hold it for 1 second until the pen begins to move back onto the chart.

## Changing recorder range

The chart recorder contains eight temperature ranges and is factory-programmed for the refrigerator. To select another range, press and hold button #3 until the pen moves off of the chart paper. Press and hold for five seconds either button #1 or button #2. Release the button and the green LED will begin to flash. The number of flashes corresponds to the temperature ranges as shown in the table that follows.

| Program No. | Range |
|---|---|
| Program 1 | -40°C to 30°C |
| Program 2 | 0°C to 60°C |
| Program 3 | -100°C to 39°C |
| Program 4 | -5°C to 50°C |
| Program 5 | 0°C to 100°C |
| Program 6 | -100°C to -200°C |
| Program 7 | -115°C to 50°C |
| Program 8 | -10°C to 70°C |

## Calibrating the chart recorder

Place an accurate thermometer in the chamber next to the recorder's probe. After about three minutes, compare the thermometer with the chart recorder. If an adjustment is necessary, press either the #1 or #2 button to move the pen left or right. The button must be held about five seconds before the pen begins to move. Release the button when the pen matches the thermometer.

# Section 3 Operation

## Operating the Performance Alarm/Monitor

The Performance Monitor/Alarm is microprocessor controlled and monitors the high and low temperatures of two, in-cabinet temperature probes, sounding a tone and flashing warning lights when preset limits are exceeded. The unit alerts the operator when a door is held open for more than 30 seconds, and sounds a tone when main electrical power is disrupted. A built-in counter also records the number of door opening/closing cycles during a 24-hour period. The count resets each day at midnight.

Nine alarm occurrences are stored in the monitor's memory and may be reviewed at any time by the operator. High or low temperature extremes are displayed along with day, month, and time information.

The monitor control panel uses a two-line liquid crystal (LCD), alpha-numeric display and four pressure-sensitive, data entry keys or buttons which make a "click" when pressed.

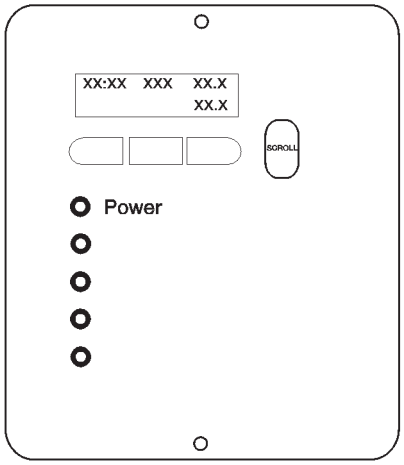


**Figure 3-1.** Alarm/Monitor Control Panel

The three buttons beneath the display are unmarked. Their functions are identified in the LCD line above them, and change with the various operating functions of the alarm/monitor.

The SCROLL button is used when programming the unit. **Note** The center button is used to silence the audible alarm. ▲

## Reading Real-time Refrig Conditions

When the refrigerator is operating, the display screen shows the chamber temperature from Probe 1.

Pressing the Scroll button displays the temperature from Probe 2.

Pressing the Scroll button again shows the number of door openings since midnight of the current day (with date and time of openings). Pressing Scroll a third time returns the display to other alarm messages.

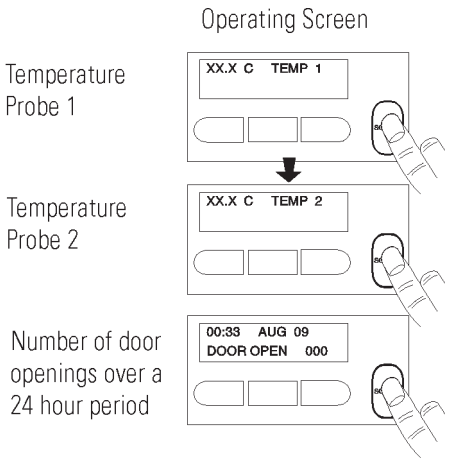


**Figure 3-2.** Real-time conditions

## Setting the High/Low Temp Alarm Setpoints

With the Temp 1 screen showing on the display as illustrated in Figure 3-3, press and hold the left button and press the Scroll button. Release the buttons.

Using the up and down arrow buttons, set the High Alarm Temperature Setpoint. The display will change in 0.1° increments. Holding the up or down button will cause the display to scroll in that direction.

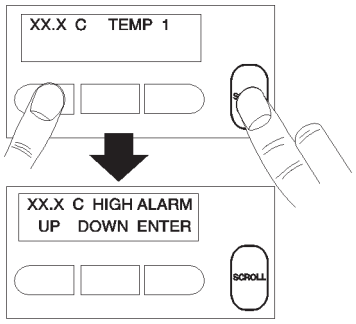


**Figure 3-3.** Real-time conditions

When the desired temperature is set, press the Enter button to store it into memory, then press Scroll to advance to the Low Temperature Alarm set screen. Chart 3-1 illustrates the entire alarm setting procedure.

To return to the Temp 1 Operating Screen, press the Scroll button several times to step through the Month, Day and Time setting screens.

## Setting the Month, Day, and Time

The Month, Day and Time may be set directly following the setting of the High and Low Temperature Alarms.

However, these parameters may be set or changed at any time by pressing and holding the left and then pressing the Scroll button as shown in Figure 3-3. Releasing the left button and pressing the Scroll button two more times will show the date and time screen. The month will be flashing

## Setting the Month, Day, and Time (cont.)

Using the up and down buttons, step the display to the desired month and press the Scroll button. If no change to the month is desired, simply press the Scroll button once more. The Day segment will begin flashing.

Use the up and down buttons to step the display to the desired day. Press Scroll. The Hour segment will begin flashing.

Step the hours up or down and press Scroll. The Minutes will begin flashing. Set the minutes and press Scroll. The display will return to the Temp 1 screen.

Chart 3-1 on the following page illustrates the date/time setting sequence.

# To set the high and low temperature alarms and program the Month, Day and Time

**Chart 3-1**

Performance Alarm/Monitor

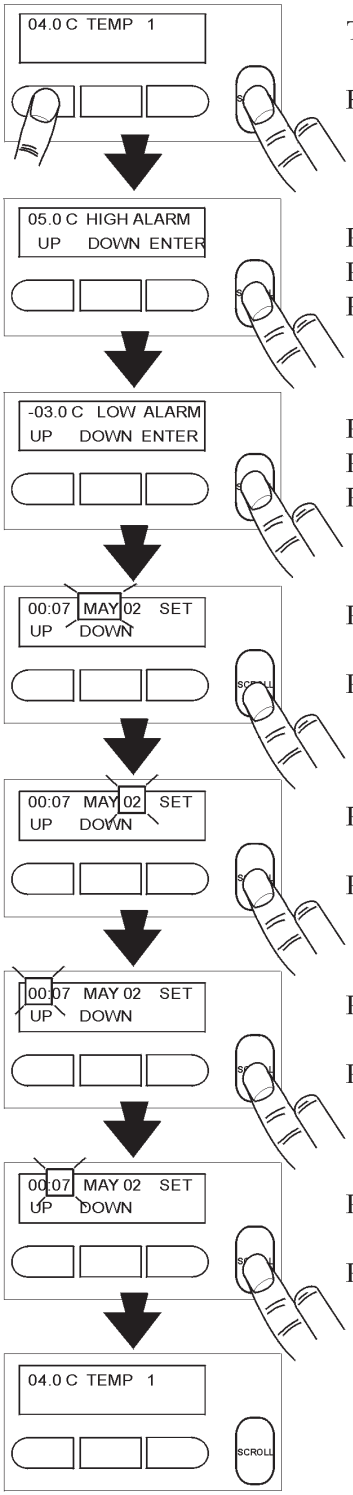


To start, press and hold the left button, then press Scroll

Release the buttons

Press Up and Down to set the temperataure in 0.1 C increments
Press Enter to store
Press Scroll to set Low Temperature Alarm

Press Up and Down to set the temperature in 0.1 C increments
Press Enter to store
Press Scroll to set Month, Day and Time

Press Up and Down to select the Month

Press Scroll

Press Up and Down to select the Day

Press Scroll

Press Up and Down to select the Hour

Press Scroll

Press Up and Down to select the Minute(s)

Press Scroll to return to Operating Screen

**Note: Pressing and holding the Up and Down buttons will scroll the display in that direction**

# Interpreting the Alarm Information

The Performance Alarm/Monitor will store information for nine different alarm incidents. Pressing the Scroll button three times will step past the Temp 2 and Door Openings screens to these alarm information screens.

An example of an alarm screen is illustrated in Figure 3-4.

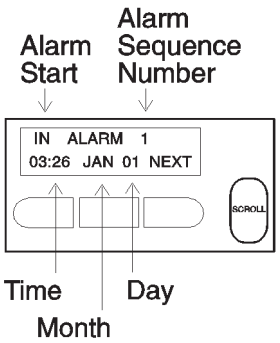


**Figure 3-4.**

The information on all alarm screens is arranged by the microprocessor in a horizontal and vertical pattern. Chart 3-2 illustrates the information array. Pressing the Next button steps through the alarm occurrences vertically from Alarm 1 through Alarm 9, and back to Alarm 1 as illustrated in Figure 3-5.

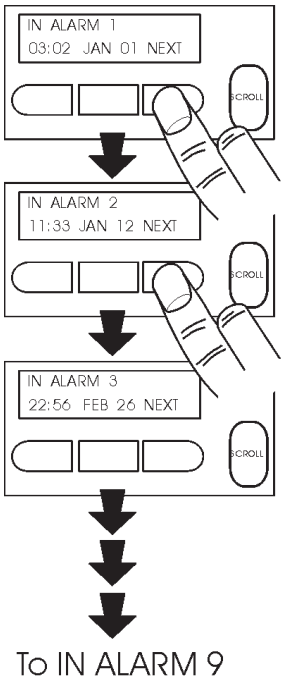


**Figure 3-5.**

As shown in Figure 3-6, pressing the Scroll button, steps the display horizontally through three screens of information regarding a particular alarm incident. In Figure 3-6, the upper chamber temperature went into alarm at 3:02 a.m. on January 1. The temperature returned within the upper and lower limits at 3:26 a.m. The third screen shows that the maximum or minimum temperature reached during the alarm condition was 3.5°C.

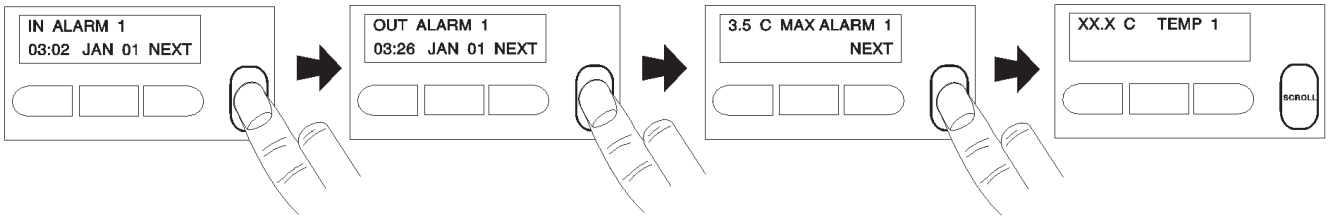


**Figure 3-6.** Alarm Information

## Calibrating the Temp Probes

Calibrate the temperature probes every three months using a calibrated thermometer (calibrated and traceable to the National Bureau of Standards).

Place the thermometer inside the upper chamber temperature bottle next to the Performance Monitor probe.

Allow the temperatures to stabilize.

From the Temp 1 screen, press the right button and then the Scroll button. The display will change as illustrated in Figure 3-7.

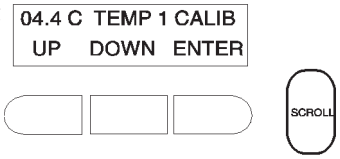


**Figure 3-7.** Temperature Calibration

Compare the temperature on the monitor display with the temperature shown by the thermometer. Using the Up and Down buttons, match the temperature on the display screen with that shown by the thermometer. Press Enter to store into memory.

The same procedures apply when calibrating the lower chamber temperature. Pressing the Scroll button, the display is advanced to Temp 2. Press Up or Down to change the temperature, then Enter.

Pressing the Scroll button after calibrating either probe advances the display to Alarm Test.

## Overtemp/Undertemp Alarm Test

From the High Alarm Test? Screen, pressing Yes will advance the temperature display to an upper test limit. When reached, the alarm will sound and the Overtemperature light will flash. Pressing the center button below the display silences the alarm. The alarm does not ring back during alarm test. The ring back is for normal operations only.

Pressing Scroll, the flashing light will stop and the display will advance to the Low Alarm Test? screen. As in the high temperature alarm test, pressing Yes will cause the display to step downward. The alarm will sound and the Undertemperature light will flash. Pressing the center button below the LCD will silence the alarm. Pressing Scroll will extinguish the flashing light and return the display to the Temp 1 screen.

## If the probe tests fail

If the alarm temperature probe fails these tests as shown in Chart 3-3, the probe is either defective or has become unplugged from the circuit board (Figure 2-4). Contact the Technical Services department at 1-888-217-1790, if necessary.

## Silencing the Audible Alarm

Pressing the center button below the display screen will silence the audible alarm. Refer to Figure 3-8. However, the alarm will ring-back in 30 minutes if the alarm condition still exists.

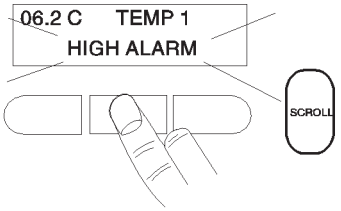


**Figure 3-8.**

## Testing Performance Alarm Battery

Test the performance alarm battery by turning off the unit or pulling the plug from the electrical outlet. The audible alarm should sound and the Power Failure indicator should light. Allow the alarm to continue for 5 to 10 seconds before returning power to the unit.

If the alarm does not activate, replace the battery with stock number 400116. Refer to Figure 3-9 and to the installation instructions in Section 2.

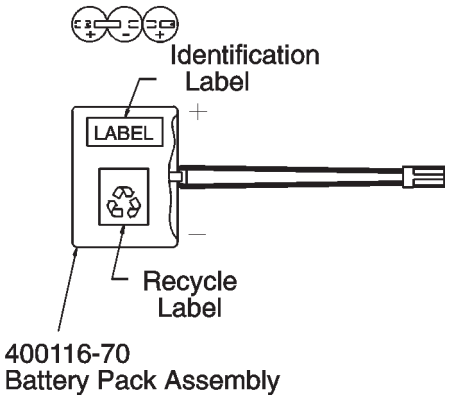


**Figure 3-9.**

Perform the alarm test at intervals recommended by the laboratory or the bolld bank industry.

# Alarm Information Array

**Chart 3-2**

Performance
Alarm/Monitor

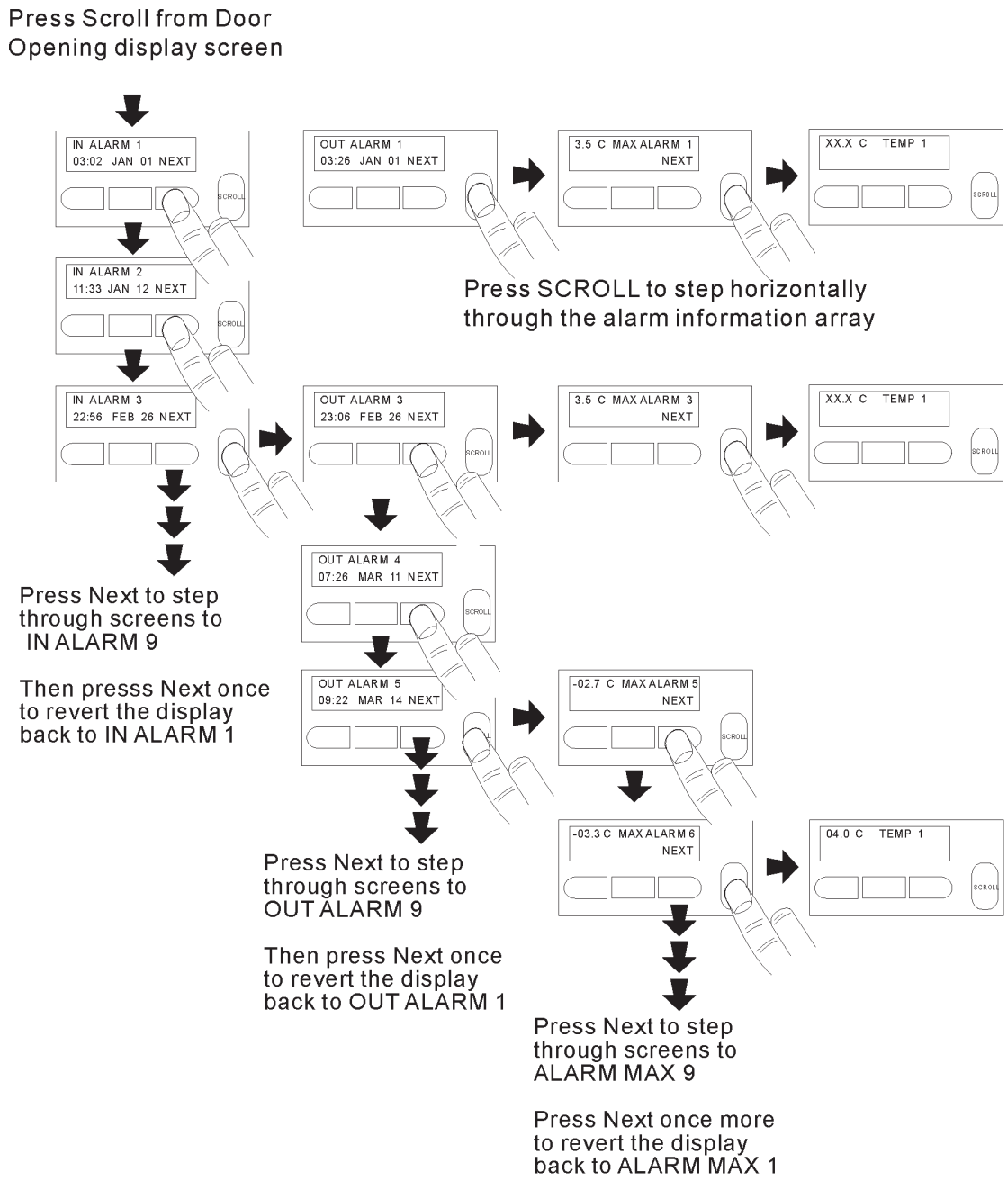

## Calibrating the temperature probes and testing the over temp and under temp alarm system

**Chart 3-3**

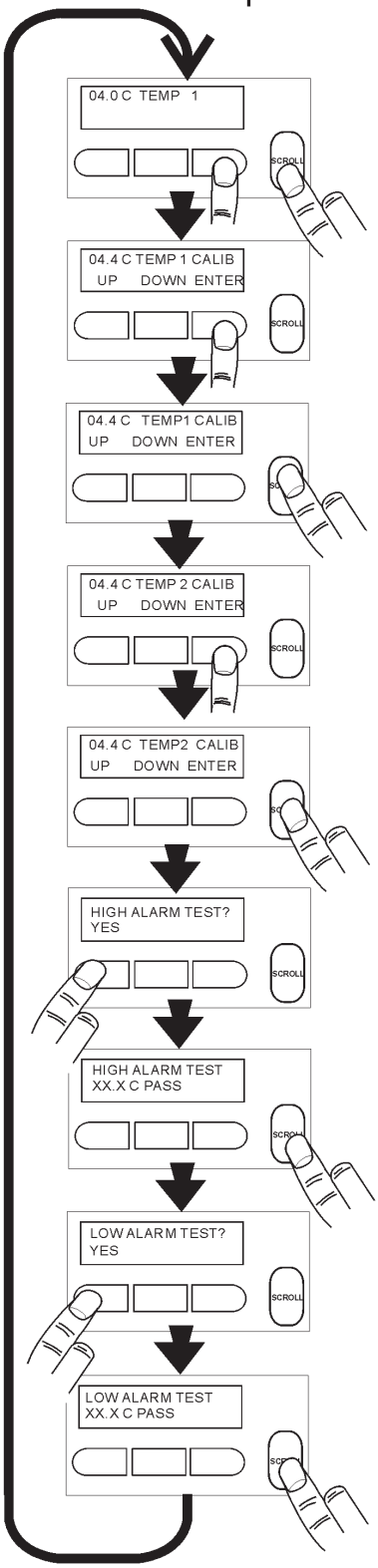


Place calibrated thermometers in upper and lower probe bottles
Allow system to stabilize
Press and hold the right button, then press Scroll
Release the buttons

Press Up or Down to calibrate the temperature in 0.1 C increments
When display matches thermometer press Enter to store

Press Scroll to calibrate Lower Temperature Probe

Press Up or Down to calibrate the temperature in 0.1 C increments
When display matches thermometer press Enter to store

Press Scroll to proceed to alarm tests

To test the high temperature alarm, press Yes
The alarm probe temperature will rise until upper test limit is reached

If the system is working properly, the Overtemp alarm will activate, and after a few seconds, the test will show PASS or FAIL
Press Scroll to continue alarm tests

To test the low temperature alarm, press Yes
The alarm probe is heated and cooled to check its function

If the system is working properly, the Undertemp alarm will activate, and after several seconds, the test will show PASS or FAIL
Press Scroll to return to the operating screen

# Section 4 Maintenance

**Caution** Wear gloves and a breathing mask whenever cleaning blood bank equipment. Follow established laboratory procedures. ▲

## Cleaning

The following section describes the recommended cleaning procedures for this equipment.

### Interior

Interior surfaces of blood bank refrigerators may be cleaned with any general purpose laboratory disinfectant suitable for stainless steel. If unusual contamination is present, follow established laboratory procedures.

### Condenser

The air-cooled condenser is the finned surface located at the rear of the refrigeration compartment. Clean this area at least every three months with a soft brush and vacuum cleaner.

### Door gasket

Clean the door gasket at least every three months with a mild soap and water solution. Wear protective gloves.

### Drawer removal and installation

**Caution** Correct installation of the drawers is very important for the safety of personnel and proper operation of the drawers. ▲

To remove the drawer, pull the drawer all the way out until it stops. Depress the release tabs on both tracks (see Figure 4-1).

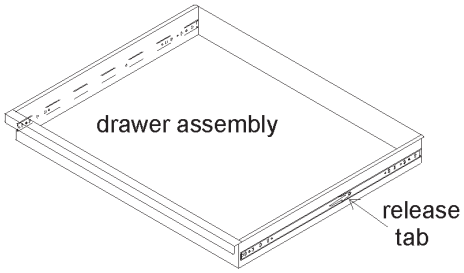


**Figure 4-1.** Drawer Assembly

**IMPORTANT** It is recommended that two persons reinstall the drawer to ensure that the bearing carriages, slides and tracks align correctly. ▲

1. To reinstall the drawer, first make sure the slide is even with the end of the track, as shown in Figure 4-2.

2. Pull the bearing carriage forward to the end of the track.

3. The center section of each slide needs to be pushed in to the back of the track. Refer to Figure 4-2.

4. Align the tracks on the drawer with the slides on each side of the unit.

5. Slide the drawer in.

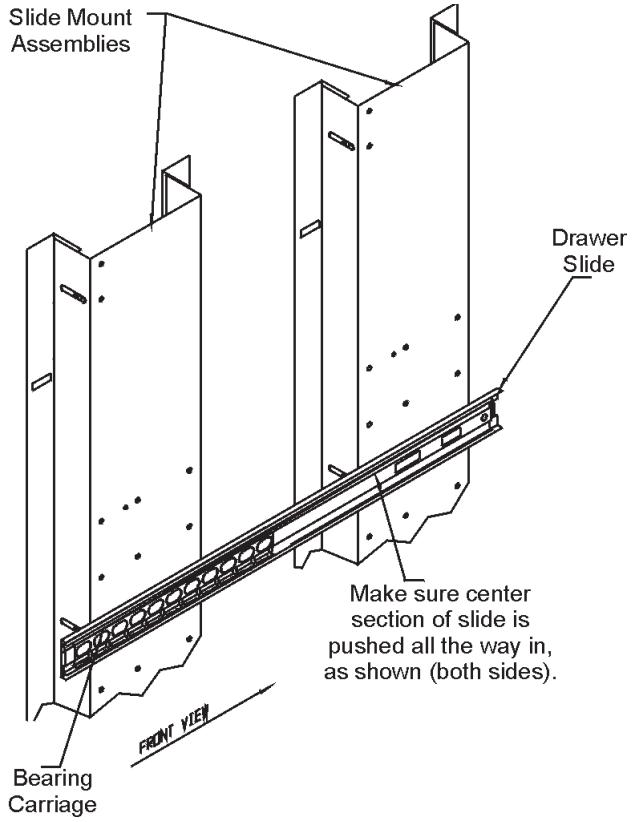


**Figure 4-2.** Drawer Slide

# Section 5 Troubleshooting and Service

The following is a guide for troubleshooting some of the common problems that may be encountered over the operating life of the refrigerators. This section is provided as a support to qualified electrical and refrigeration service.

| Symptom | Possible Cause/Possible Fix |
|---|---|
| Refrigerator appears to be completely inoperative; audible alarm is activated and there is no green light. | Power line cord is disconnected.<br><br>Power source circuit breaker is open or source fuse is blown.<br><br>Power switch is not turned on (3883, 3887). |
| High temperature indicator and audible alarm are activated after the door is opened and are deactivated shortly after the door is closed. | Alarm system probe is defective.<br>**Note** This situation may be normal if the alarm probe is not immersed in liquid.<br><br>Temp control needs adjusted.<br><br>Alarm point may need adjusted. |
| Low temperature indicator and audible alarm are activated intermittently or continuously. Chamber temperature is unstable and may occasionally be below 1.5°C (+/-0.5°C). | Refrigeration system temperature controller may need adjusting.<br><br>Alarm point may need adjusted. |
| Low temperature indicator and audible alarm are activated intermittently or continuously; chamber temperature is relatively stable at 4°C. | Probe or control board may be defective.<br><br>Alarm points may need adjustment.<br><br>Possible loose probe wires. |

| Symptom | Possible Cause/Possible Fix |
|---|---|
| Chamber not being refrigerated or refrigeration is insufficient to provide stable temperature at 4°C; both compressor and condenser fan are operating intermittently. | Circulation fan is inoperative.<br><br>Refrigeration system temperature controller needs adjusting or defective.<br><br>Ice on cooling coil. |
| Chamber not being refrigerated or refrigeration is insufficient to provide stable temperature of 4°C; compressor and condenser fan are operating continuously. | Insufficient amount of refrigerant, (refrigerant leak). Repair, evacuate and recharge. See charge label for type and amount.<br><br>Compressor starting relay is defective.<br><br>Defective compressor.<br><br>Defective temperature control. |
| Chamber not being refrigerated; compressor is warm (indicating it is receiving power) but not operating; condenser fan is operating | Compressor starting capacitor is defective.<br><br>Compressor starting relay is defective.<br><br>Defective compressor. |
| Ice build-up on cooling coil. | Defrost drain line is blocked.<br><br>Refrigeration system temperature controller is defective. |
| Chamber temperature is not stable; temperature recovery time is slow when no product is in the chamber. | Defective air circulation fan.<br><br>Refrigeration system temperature controller is defective.<br><br>Insufficient refrigerant (leak).<br><br>Defective compressor.<br><br>Compressor starting relay is defective.<br><br>Insufficient voltage.<br><br>Dirty condenser.<br><br>Insufficient ventilation at top of cabinet. |

| Symptom | Possible Cause/Possible Fix |
|---|---|
| Chamber not being refrigerated or refrigeration is insufficient to provide stable temperature of 4°C; compressor is operating intermittently; condenser fan is not operating.. | Condenser fan motor is defective.<br><br>Fan blade is obstructed.<br><br>Possible defective temperature control. |
| Chamber not being refrigerated or refrigeration is insufficient to provide stable 4°C temperature; compressor is operating intermittently; condenser fan is operating continuously. | Power line voltage is insufficient.<br><br>Defective compressor thermal overload switch.<br><br>Air-cooled condenser is dirty.<br><br>Inadequate ventilation at top of cabinet.<br><br>Ambient temperature near the cabinet is too high.<br><br>Compressor starting relay is defective. |
| Refrigerator is operating at 4°C but the alarm selector keyswitch cannot be set to the Normal position without the alarm system activating; temperature pilot lights (normal, high, low) are out. | Performance monitor circuit board is defective.<br><br>Performance monitor system transformer (circuit board power) is defective.<br><br>Possible defective probe or loose probe wires. |

# Section 6 Specifications

| Model | 3881 | 3889 |
|---|---|---|
| Construction | Exterior: Cold-rolled steel, powder coated<br>Interior: Stainless steel<br>Insulation: High density foamed-in-place urethane | |
| Temperature Range | Factory pre-set at +4°C | |
| Exterior Dimensions | 29.8"W x 74.3" H x 28.0" F-B<br>(75.7cm x 188.7cm x 71.1cm) | |
| Capacity | 19.7 cu. ft. nominal (588 liters)<br>Up to 240 plastic bags | |
| Alarm System | Pre-set low limit: +1.5°C<br>Pre-set high limit: +6.0°C<br>Battery back-up | |
| Refrigeration | 1/4 HP air cooled condensing unit | |
| Electrical | 120V, 1 phase, 60 Hz, 8.0 FLA<br>(Voltage range 108-125V) | 230V, 1 phase, 50 Hz, 4.0 FLA<br>(Voltage range 216-250V) |
| Shipping Weight | Ocean: 740 lbs. (336 kg)<br>Air/Container: 666 lbs. (302 kg.)<br>Motor: 564 lbs. (256 kg) | |

| Model | 3883 | 3887 |
|---|---|---|
| Construction | Exterior: Cold-rolled steel, powder coated<br>Interior: Stainless steel<br>Insulation: High density foamed-in-place urethane | |
| Temperature Range | Factory pre-set at +4°C | |
| Exterior Dimensions | 38.0"W x89.0" H x 34.0" F-B<br>(96.5cm x 226.1cm x 86.4cm) | |
| Capacity | 29.1 cu. ft. nominal (824 liters)<br>Up to 490 plastic bags | |
| Alarm System | Pre-set low limit: +1.5°C<br>Pre-set high limit: +6.0°C<br>Battery back-up | |
| Refrigeration | 1/2 HP air cooled condensing unit | |
| Electrical | 120V, 1 phase, 60 Hz, 12 FLA<br>(Voltage range 108-125V) | 230V, 1 phase, 50 Hz, 6 FLA<br>(Voltage range 216-250V) |
| Shipping Weight | Ocean: 1200 lbs. (544 kg)<br>Air/Container: 1087 lbs. (493kg.)<br>Motor: 1017 lbs. (461kg) | |

# Section 7 Spare Parts

**Table 7-1.** Parts for Models 3881 and 3889

| Quantity | Stock# | Description |
|---|---|---|
| 2 | 890138 | 8 oz. bottle |
| 2 | 34054 | Silicone stopper, #6, 1-1/4 |
| 1 | 940561 | Right angle thermometer |
| 1 | 231179 | Temp control |
| 1 | 205149 | Condensing unit, 1/4 HP, R404A |
| 1 | 209016 | Dryer |
| 1 | 180003 | Recorder chart paper |
| 1 | 201120 | Recorder* |

*The recorder requires P/N 197070 inkless pen

**Table 7-2.** Parts for Models 3883 and 3887

| Quantity | Stock# | Description |
|---|---|---|
| 2 | 890138 | 8 oz. bottle |
| 2 | 34054 | Silicone stopper, #6, 1-1/4 |
| 1 | 940561 | Right angle thermometer |
| 1 | 231179 | Temp control |
| 1 | 205072 | Condensing unit, 1/2 HP, 120V (3883) |
| 1 | 209016 | Dryer |
| 1 | 201165 | Condensing Unit, 1/3 HP, 230V (3887) |
| 1 | 180003 | Recorder chart paper |
| 1 | 201120 | Recorder* |

*The recorder requires P/N 197070 inkless pen

**Note** For electrical parts, refer to the electrical schematics in Section 9. ▲

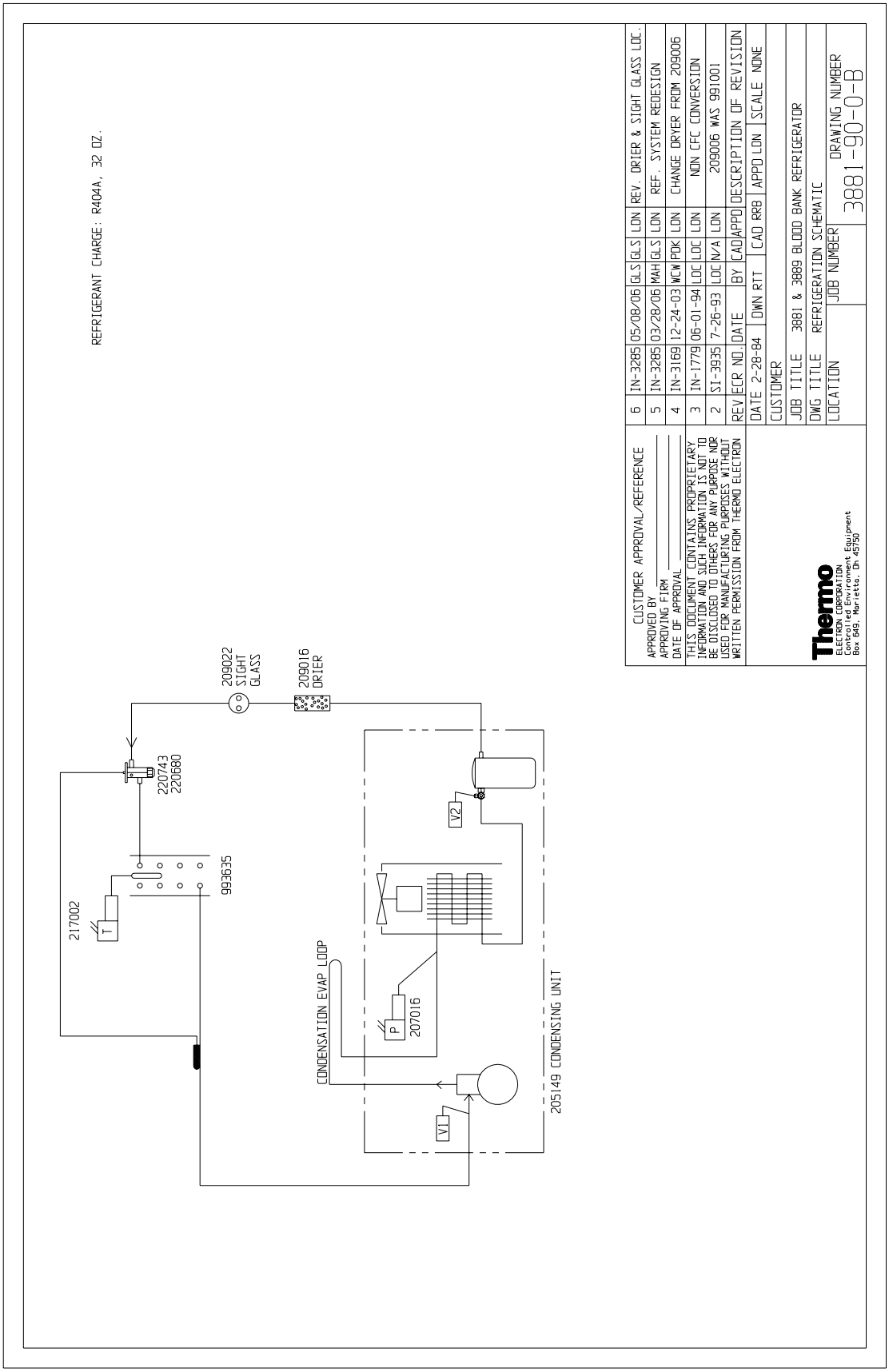
REFRIGERANT CHARGE: R404A, 32 OZ.
209022
SIGHT
GLASS
209016
DRIER
220743
220680
993635
217002
T
V2
V1
P
207016
CONDENSATION EVAP LOOP
20149 CONDENSING UNIT
CUSTOMER APPROVAL/REFERENCE
APPROVED BY
APPROVING FIRM
DATE OF APPROVAL
THIS DOCUMENT CONTAINS PROPRIETARY INFORMATION AND SUCH INFORMATION IS NOT TO BE DISCLOSED TO OTHERS FOR ANY PURPOSE NOR USED FOR MANUFACTURING PURPOSES WITHOUT WRITTEN PERMISSION FROM THERMO ELECTRON
6 IN-3285 05/08/06 GLS GLS LDN REV. DRIER & SIGHT GLASS LOC.
5 IN-3285 03/28/06 MAH GLS LDN REFF. SYSTEM REDESIGN
4 IN-3169 12-24-03 WCW PDK LDN CHANGE DRYER FROM 209006
3 IN-1779 06-01-94 LDC LDC LDN NON CFC CONVERSION
2 SI-3935 7-26-93 LDC N/A LDN 209006 WAS 991001
REV ECR NO. DATE BY CAD APPD DESCRIPTION OF REVISION
DATE 2-28-84 DWN RTT CAD RRB APPD LDN SCALE NONE
CUSTOMER
JOB TITLE 3881 & 3889 BLOOD BANK REFRIGERATOR
DWG TITLE REFRIGERATION SCHEMATIC
LOCATION JOB NUMBER
DRAWING NUMBER
3881-90-0-B
Thermo
ELECTRON CORPORATION
Controlled Environment Equipment
Box 649, Marietta, Oh 45750

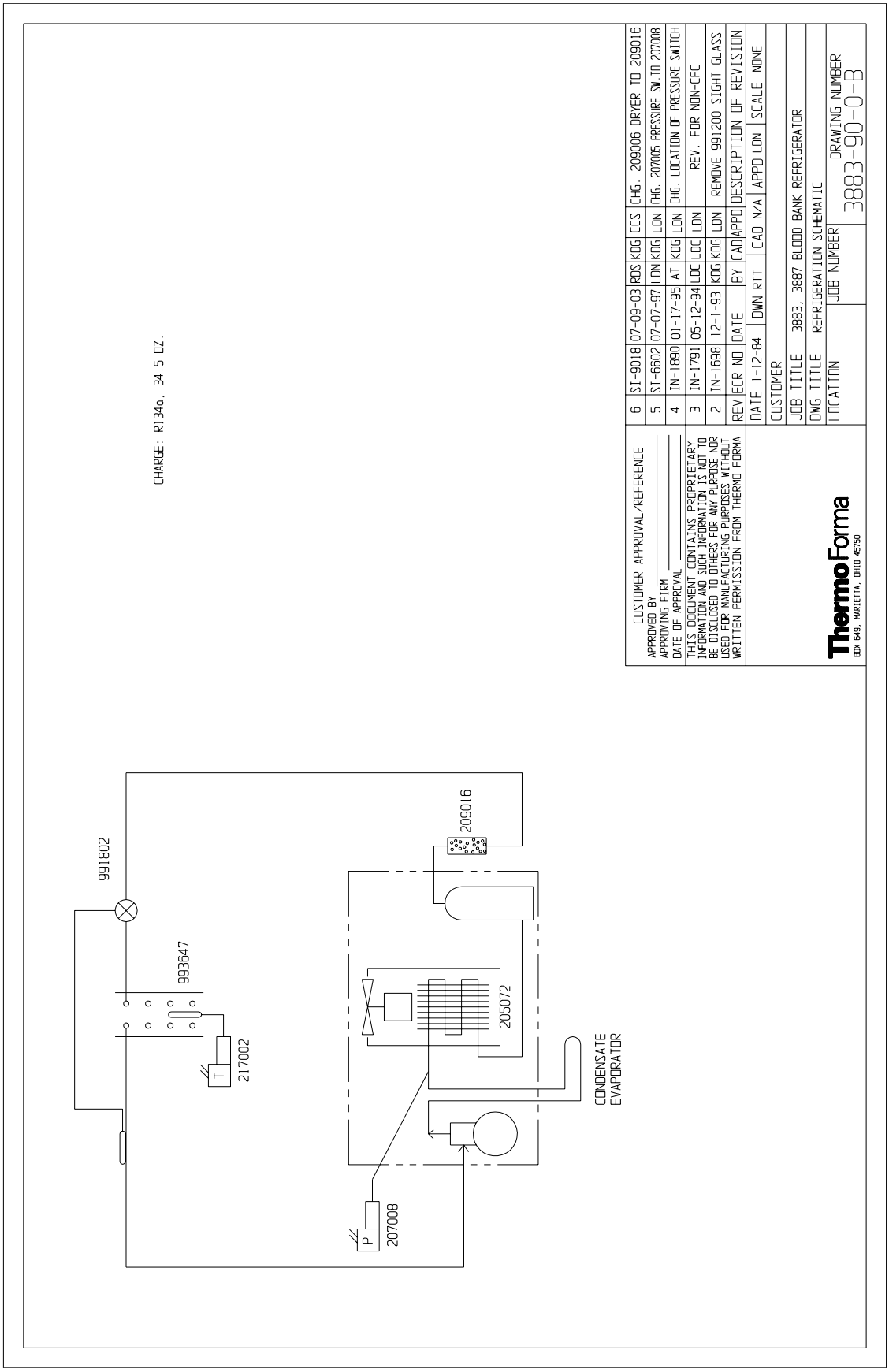
CHARGE: R134a, 34.5 OZ.
991802
993647
T
217002
P
207008
209016
205072
CONDENSATE
EVAPORATOR
CUSTOMER APPROVAL/REFERENCE
APPROVED BY
APPROVING FIRM
DATE OF APPROVAL
THIS DOCUMENT CONTAINS PROPRIETARY INFORMATION AND SUCH INFORMATION IS NOT TO BE DISCLOSED TO OTHERS FOR ANY PURPOSE NOR USED FOR MANUFACTURING PURPOSES WITHOUT WRITTEN PERMISSION FROM THERMO FORMA
REV ECR NO. DATE BY CAD APPD DESCRIPTION OF REVISION
6 SI-9018 07-09-03 RDS KDG CCS CHG. 209006 DRYER TO 209016
5 SI-6602 07-07-97 LDN KDG LDN CHG. 207005 PRESSURE SW. TO 207008
4 IN-1890 01-17-95 AT KDG LDN CHG. LOCATION OF PRESSURE SWITCH
3 IN-1791 05-12-94 LDC LDC LDN REV. FOR NON-CFC
2 IN-1698 12-1-93 KDG KDG LDN REMOVE 991200 SIGHT GLASS
DATE 1-12-84 DWN RTT CAD N/A APPD LDN SCALE NONE
CUSTOMER
JOB TITLE 3883, 3887 BLOOD BANK REFRIGERATOR
DWG TITLE REFRIGERATION SCHEMATIC
LOCATION JOB NUMBER
DRAWING NUMBER
3883-90-0-B
ThermoForma
BOX 649, MARIETTA, OHIO 45750

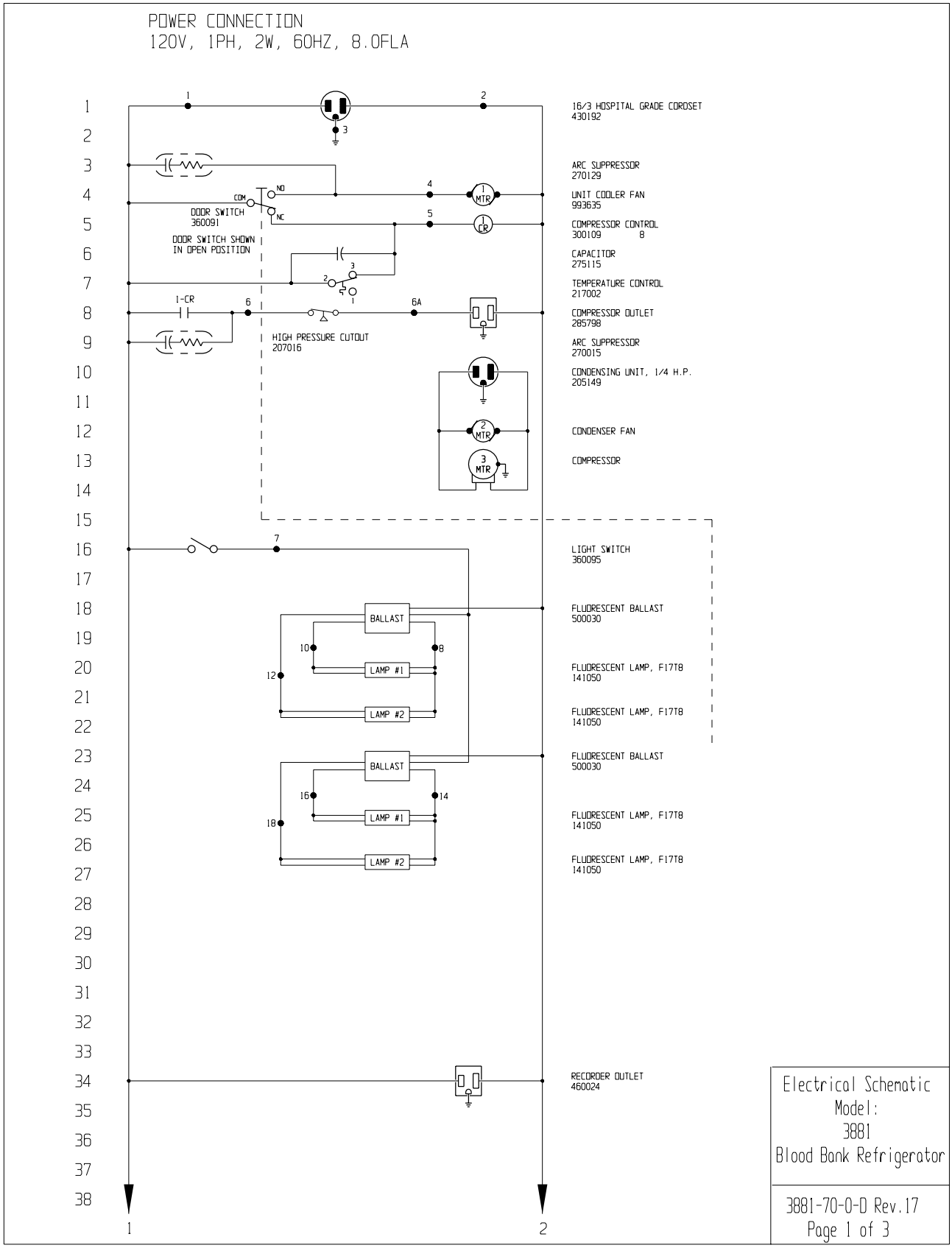
POWER CONNECTION
120V, 1PH, 2W, 60HZ, 8.0FLA
16/3 HOSPITAL GRADE CORDSET
430192
ARC SUPPRESSOR
270129
UNIT COOLER FAN
993635
COMPRESSOR CONTROL
300109 8
CAPACITOR
275115
TEMPERATURE CONTROL
217002
COMPRESSOR OUTLET
285798
ARC SUPPRESSOR
270015
CONDENSING UNIT, 1/4 H.P.
205149
CONDENSER FAN
COMPRESSOR
LIGHT SWITCH
360095
FLUORESCENT BALLAST
500030
FLUORESCENT LAMP, F17T8
141050
FLUORESCENT LAMP, F17T8
141050
FLUORESCENT BALLAST
500030
FLUORESCENT LAMP, F17T8
141050
FLUORESCENT LAMP, F17T8
141050
RECORDER OUTLET
460024
DOOR SWITCH
360091
DOOR SWITCH SHOWN
IN OPEN POSITION
HIGH PRESSURE CUTOUT
207016
1-CR
BALLAST
LAMP #1
LAMP #2
BALLAST
LAMP #1
LAMP #2
Electrical Schematic
Model:
3881
Blood Bank Refrigerator
3881-70-0-D Rev.17
Page 1 of 3

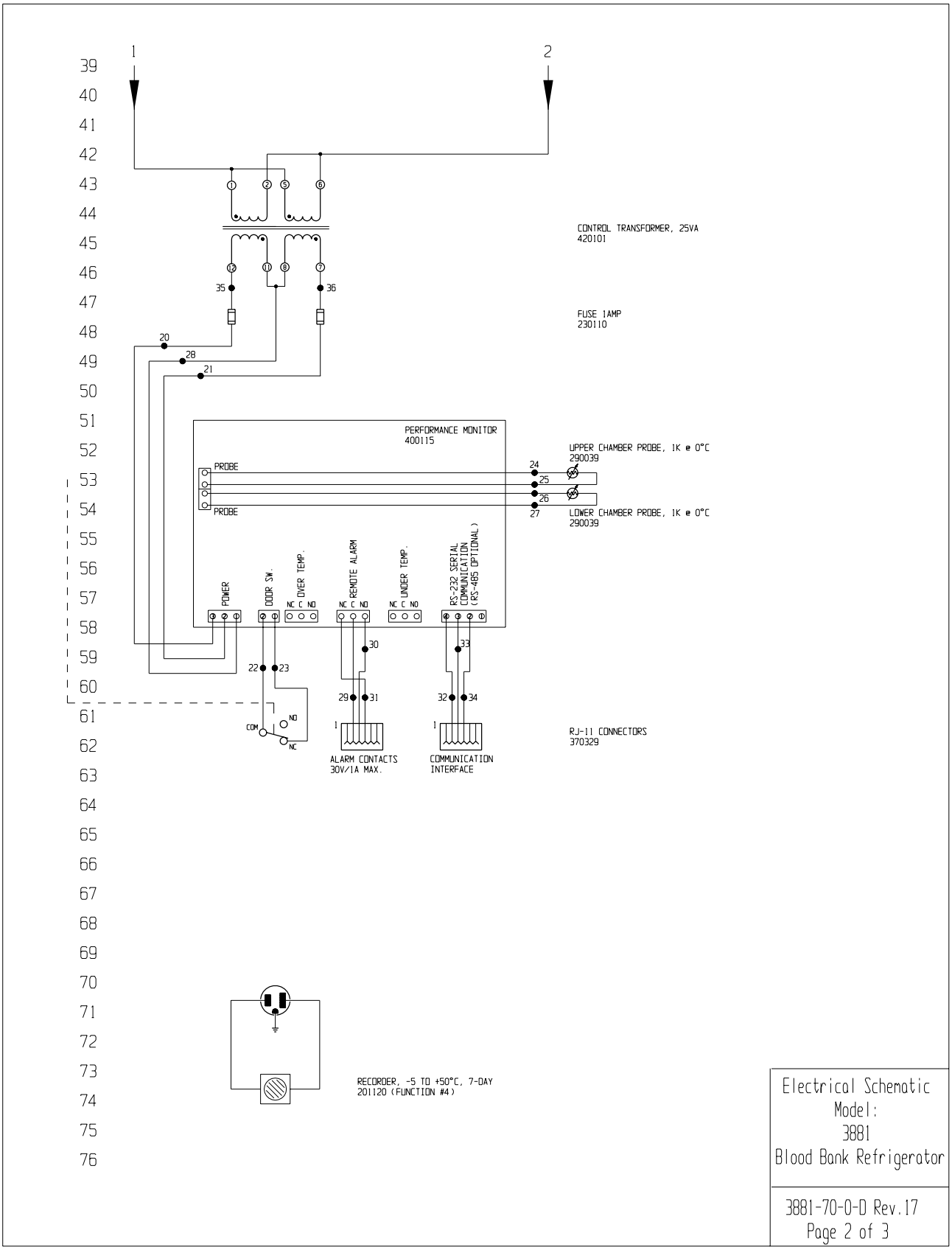
CONTROL TRANSFORMER, 25VA
420101
FUSE 1AMP
230110
PERFORMANCE MONITOR
400115
PROBE
PROBE
UPPER CHAMBER PROBE, 1K @ 0°C
290039
LOWER CHAMBER PROBE, 1K @ 0°C
290039
POWER
DOOR SW.
OVER TEMP.
REMOTE ALARM
UNDER TEMP.
RS-232 SERIAL COMMUNICATION (RS-485 OPTIONAL)
NC C NO
COM
NO
NC
ALARM CONTACTS
30V/1A MAX.
COMMUNICATION
INTERFACE
RJ-11 CONNECTORS
370329
RECORDER, -5 TO +50°C, 7-DAY
201120 (FUNCTION #4)
Electrical Schematic
Model:
3881
Blood Bank Refrigerator
3881-70-0-D Rev.17
Page 2 of 3

## WIRE REFERENCE CHART

| WIRE # | GAUGE | COLOR | |
|---|---|---|---|
| 1 | 16 | BLK | |
| 2 | 16 | WHT | |
| 3 | 16 | GRN | |
| 4 | 16 | BLU | |
| 5 | 16 | ORG | |
| 6 | 16 | BRN | |
| 6A | 16 | BRN | |
| 7 | 16 | BRN | |
| 8 | 20 | RED | |
| 9 | -- | NOT USED | |
| 10 | 20 | BLU | |
| 11 | -- | NOT USED | |
| 12 | 20 | BLU | |
| 13 | -- | NOT USED | |
| 14 | 20 | RED | |
| 15 | -- | NOT USED | |
| 16 | 20 | BLU | |
| 17 | -- | NOT USED | |
| 18 | 20 | BLU | |
| 19 | -- | NOT USED | |
| 20 | 20 | YEL | |
| 21 | 20 | BLU | |
| 22 | 20 | BRN | |
| 23 | 20 | RED | |
| 24 | 22 | RED | |
| 25 | 22 | WHT | |
| 26 | 22 | RED | |
| 27 | 22 | WHT | |
| 28 | 20 | PUR | |
| 29 | 22 | BLK | 22/3 W/SHIELD |
| 30 | 22 | RED | 22/3 W/SHIELD |
| 31 | 22 | WHT | 22/3 W/SHIELD |
| 32 | 22 | WHT | 22/3 W/SHIELD |
| 33 | 22 | RED | 22/3 W/SHIELD |
| 34 | 22 | BLK | 22/3 W/SHIELD |
| 35 | 20 | YEL | |
| 36 | 20 | BLU | |

| REV | ECN NO. | DATE | BY | CAD | APPD | DESCRIPTION OF REVISION |
|---|---|---|---|---|---|---|
| 17 | IN-3285 | 04-17-06 | GLS | GLS | AKS | REV. BALLAST, LAMPS, & COND. UNIT |
| 16 | IN-2330 | 10-20-97 | GJG | KDG | LDN | CHANGED TO COBEX RECORDER |
| 15 | S1-6707 | 09-24-97 | JAS | JAS | LDN | REVISED ARC SUPPRESSORS |
| 14 | IN-2168 | 10-10-96 | BKH | KDG | LDN | CHANGED 420067 XFORMER TO 420101 |
| 13 | IN-2094 | 06-10-96 | JAS | JAS | LDN | ADD ARC SUPPRESOR TO DOOR SW. |

ATTENTION
OBSERVE PRECAUTIONS
ELECTROSTATIC
SENSITIVE DEVICES

THIS DOCUMENT CONTAINS PROPRIETARY INFORMATION AND SUCH INFORMATION IS NOT TO BE DISCLOSED TO OTHERS FOR ANY PURPOSE NOR USED FOR MANUFACTURING PURPOSES WITHOUT WRITTEN PERMISSION FROM THERMO ELECTRON

Thermo
ELECTRON CORPORATION
Controlled Environment Equipment
Box 649, Marietta, OH 45750

MODEL/PART NAME: 3881 BLOOD BANK REFRIGERATOR
DWG TITLE: ELECTRICAL SCHEMATIC
DWN: GLM | CAD: DWL | APPD: LDN | DATE: 10-03-83 | SCALE: N/A
MATERIAL:
PAINT COLOR:
TOLERANCE UNLESS OTHERWISE SPECIFIED
ANGLES: DECIMAL: .XX=± .XXX=±
DRAWING NUMBER 3881-70-0
SIZE D

Electrical Schematic
Model:
3881
Blood Bank Refrigerator

3881-70-0-D Rev.17
Page 3 of 3

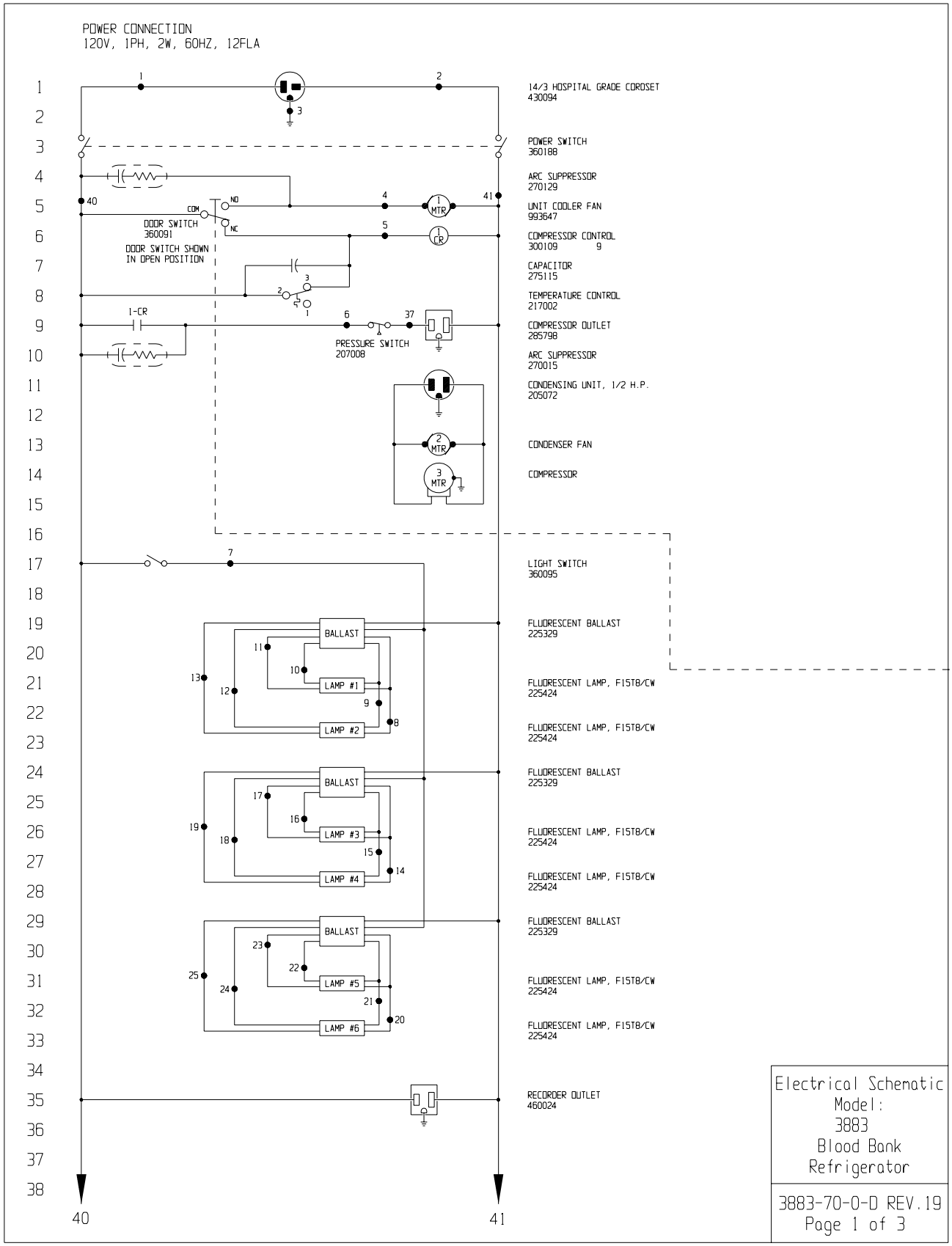
POWER CONNECTION
120V, 1PH, 2W, 60HZ, 12FLA
14/3 HOSPITAL GRADE CORDSET
430094
POWER SWITCH
360188
ARC SUPPRESSOR
270129
UNIT COOLER FAN
993647
COMPRESSOR CONTROL
300109 9
CAPACITOR
275115
TEMPERATURE CONTROL
217002
COMPRESSOR OUTLET
285798
ARC SUPPRESSOR
270015
CONDENSING UNIT, 1/2 H.P.
205072
CONDENSER FAN
COMPRESSOR
LIGHT SWITCH
360095
FLUORESCENT BALLAST
225329
FLUORESCENT LAMP, F15T8/CW
225424
FLUORESCENT LAMP, F15T8/CW
225424
FLUORESCENT BALLAST
225329
FLUORESCENT LAMP, F15T8/CW
225424
FLUORESCENT LAMP, F15T8/CW
225424
FLUORESCENT BALLAST
225329
FLUORESCENT LAMP, F15T8/CW
225424
FLUORESCENT LAMP, F15T8/CW
225424
RECORDER OUTLET
460024
DOOR SWITCH
360091
DOOR SWITCH SHOWN
IN OPEN POSITION
PRESSURE SWITCH
207008
1-CR
BALLAST
LAMP #1
LAMP #2
LAMP #3
LAMP #4
LAMP #5
LAMP #6
MTR
CR
COM
NO
NC
Electrical Schematic
Model:
3883
Blood Bank
Refrigerator
3883-70-0-D REV.19
Page 1 of 3

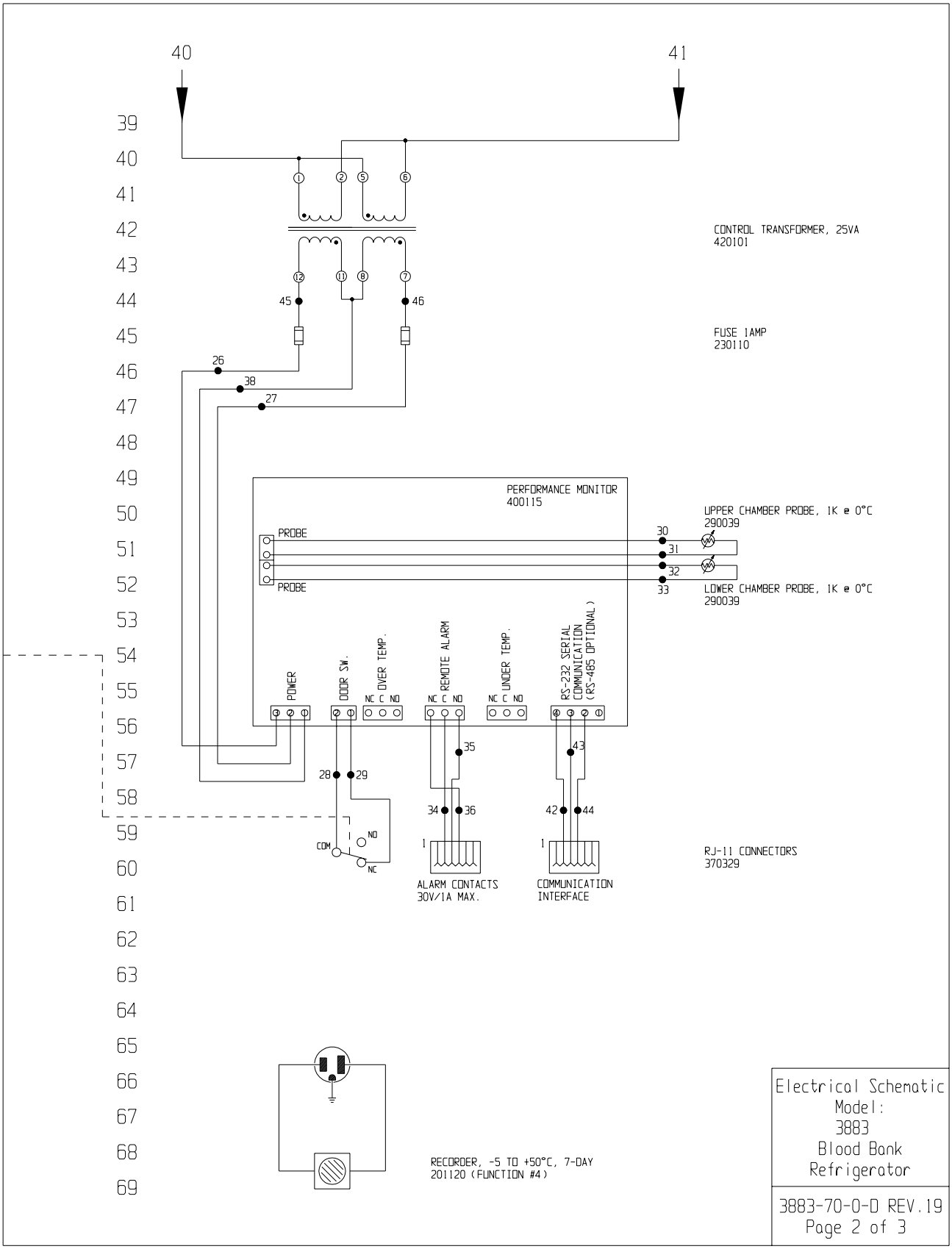
40
41
39
40
41
42
43
44
45
46
47
48
49
50
51
52
53
54
55
56
57
58
59
60
61
62
63
64
65
66
67
68
69
CONTROL TRANSFORMER, 25VA
420101
FUSE 1AMP
230110
PERFORMANCE MONITOR
400115
PROBE
PROBE
UPPER CHAMBER PROBE, 1K @ 0°C
290039
LOWER CHAMBER PROBE, 1K @ 0°C
290039
POWER
DOOR SW.
OVER TEMP.
REMOTE ALARM
UNDER TEMP.
RS-232 SERIAL COMMUNICATION (RS-485 OPTIONAL)
NC C NO
COM
NO
NC
ALARM CONTACTS
30V/1A MAX.
COMMUNICATION
INTERFACE
RJ-11 CONNECTORS
370329
RECORDER, -5 TO +50°C, 7-DAY
201120 (FUNCTION #4)
Electrical Schematic
Model:
3883
Blood Bank
Refrigerator
3883-70-0-D REV.19
Page 2 of 3

## WIRE REFERENCE CHART

| WIRE # | GAUGE | COLOR | |
|---|---|---|---|
| 1 | 14 | BLK | |
| 2 | 14 | WHT | |
| 3 | 14 | GRN | |
| 4 | 16 | BLU | |
| 5 | 16 | ORG | |
| 6 | 16 | BRN | |
| 7 | 16 | BRN | |
| 8 | 20 | YEL | |
| 9 | 20 | YEL | |
| 10 | 20 | BLU | |
| 11 | 20 | BLU | |
| 12 | 20 | RED | |
| 13 | 20 | RED | |
| 14 | 20 | YEL | |
| 15 | 20 | YEL | |
| 16 | 20 | BLU | |
| 17 | 20 | BLU | |
| 18 | 20 | RED | |
| 19 | 20 | RED | |
| 20 | 20 | YEL | |
| 21 | 20 | YEL | |
| 22 | 20 | BLU | |
| 23 | 20 | BLU | |
| 24 | 20 | RED | |
| 25 | 20 | RED | |
| 26 | 20 | YEL | |
| 27 | 20 | BLU | |
| 28 | 20 | BRN | |
| 29 | 20 | RED | |
| 30 | 22 | RED | |
| 31 | 22 | WHT | |
| 32 | 22 | RED | |
| 33 | 22 | WHT | |
| 34 | 22 | BLK | 22/3 W/SHIELD |
| 35 | 22 | RED | 22/3 W/SHIELD |
| 36 | 22 | WHT | 22/3 W/SHIELD |
| 38 | 20 | PUR | |
| 39 | 16 | BLK | |
| 40 | 14 | BLK | |
| 41 | 14 | WHT | |
| 42 | 22 | WHT | 22/3 W/SHIELD |
| 43 | 22 | RED | 22/3 W/SHIELD |
| 44 | 22 | BLK | 22/3 W/SHIELD |
| 45 | 20 | YEL | |
| 46 | 20 | BLU | |

NOTES:

| | | | |
|---|---|---|---|
| ⊛ | Denotes Terminal Strip Connection | Parts List Reference Number | |
| 1-CR | Last Relay Number | ○ | Assembly |
| N/A | Last Terminal Number | ⬠ | Panel |
| 46 | Last Wire Number | ⬡ | Refrigeration |
| | | □ | Wiring |

CUSTOMER APPROVAL/REFERENCE
APPROVED BY _____
APPROVING FIRM _____
DATE OF APPROVAL _____

THIS DOCUMENT CONTAINS PROPRIETARY INFORMATION AND SUCH INFORMATION IS NOT TO BE DISCLOSED TO OTHERS FOR ANY PURPOSE NOR USED FOR MANUFACTURING PURPOSES WITHOUT WRITTEN PERMISSION FROM THERMO ELECTRON

Thermo ELECTRON CORPORATION

| REV | ECR NO. | DATE | BY | CAD | APPD | DESCRIPTION OF REVISION |
|---|---|---|---|---|---|---|
| 19 | IN-3138 | 08-27-03 | RLM | KDG | CCS | CORRECT SYMBOLIC REP. OF PLUG |
| 18 | IN-2331 | 10-06-97 | GJG | PDK | LDN | REVISED RECORDER TO COBEX |
| 17 | SI-6707 | 09-24-97 | JAS | JAS | LDN | REV. ARC SUPPRESSORS |
| 16 | SI-6602 | 07-07-97 | LDN | KDG | LDN | CHG. 207005 PRESSURE SW.TO 207008 |
| 15 | IN-2168 | 10-10-96 | BKH | KDG | LDN | CHG.'D. 420067 XFORMER TO 420101 |

| | | | |
|---|---|---|---|
| DATE 10-3-83 | DWN GLM | CAD DWL | APPD LDN | SCALE N/A |
| CUSTOMER | | | |
| JOB TITLE 3883 BLOOD BANK REFRIGERATOR | | | |
| DWG TITLE ELECTRICAL SCHEMATIC | | | |
| LOCATION INCUBATR | JOB NUMBER | DRAWING NUMBER 3883-70-0-D | |

Electrical Schematic
Model:
3883
Blood Bank
Refrigerator

3883-70-0-D REV.19
Page 3 of 3

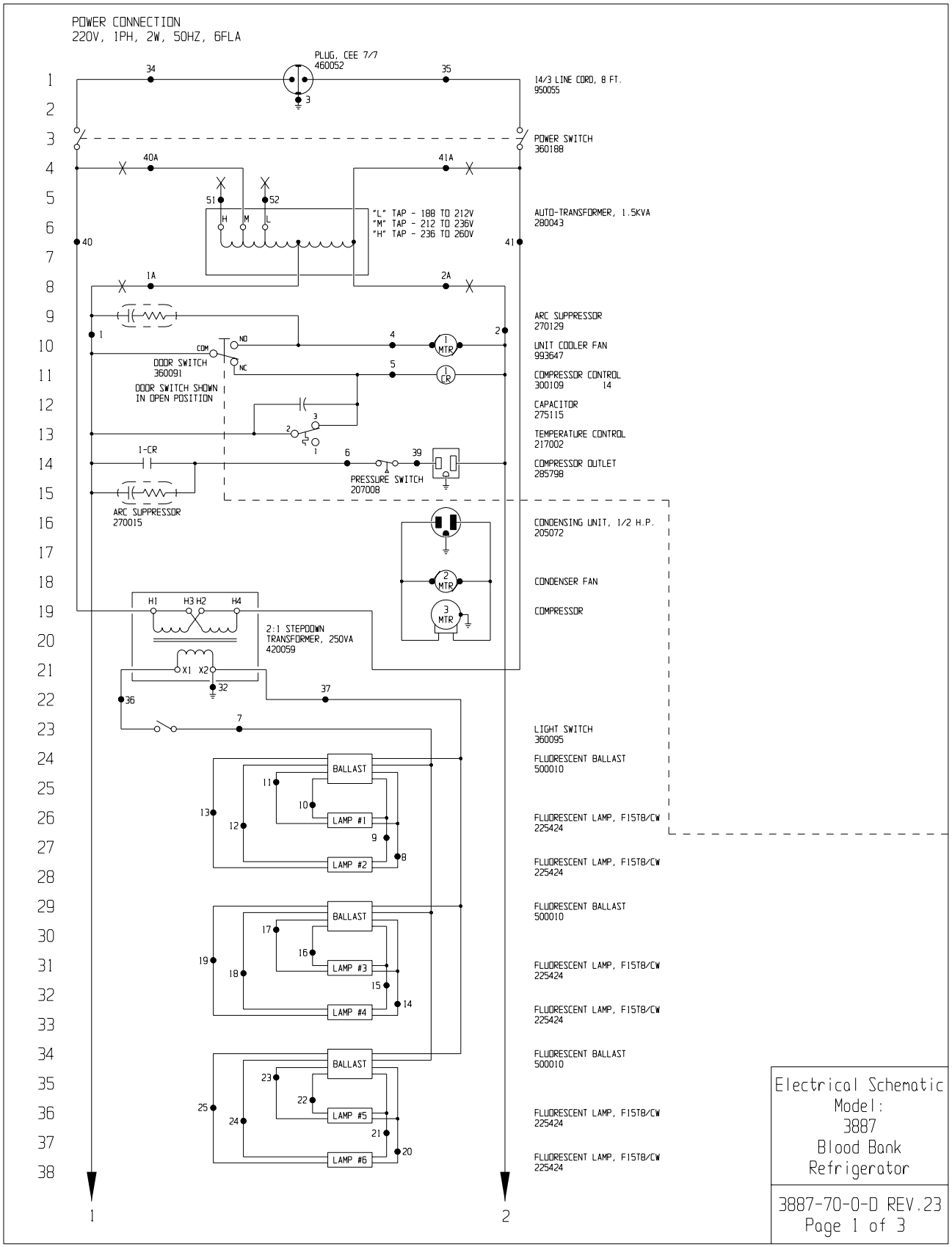
POWER CONNECTION
220V, 1PH, 2W, 50HZ, 6FLA
PLUG, CEE 7/7
460052
14/3 LINE CORD, 8 FT.
950055
POWER SWITCH
360188
"L" TAP - 188 TO 212V
"M" TAP - 212 TO 236V
"H" TAP - 236 TO 260V
AUTO-TRANSFORMER, 1.5KVA
280043
ARC SUPPRESSOR
270129
UNIT COOLER FAN
993647
DOOR SWITCH
360091
DOOR SWITCH SHOWN
IN OPEN POSITION
COMPRESSOR CONTROL
300109
CAPACITOR
275115
TEMPERATURE CONTROL
217002
PRESSURE SWITCH
207008
COMPRESSOR OUTLET
285798
ARC SUPPRESSOR
270015
CONDENSING UNIT, 1/2 H.P.
205072
CONDENSER FAN
COMPRESSOR
2:1 STEPDOWN
TRANSFORMER, 250VA
420059
LIGHT SWITCH
360095
FLUORESCENT BALLAST
500010
FLUORESCENT LAMP, F15T8/CW
225424
BALLAST
LAMP #1
LAMP #2
LAMP #3
LAMP #4
LAMP #5
LAMP #6
Electrical Schematic
Model:
3887
Blood Bank
Refrigerator
3887-70-0-D REV.23
Page 1 of 3

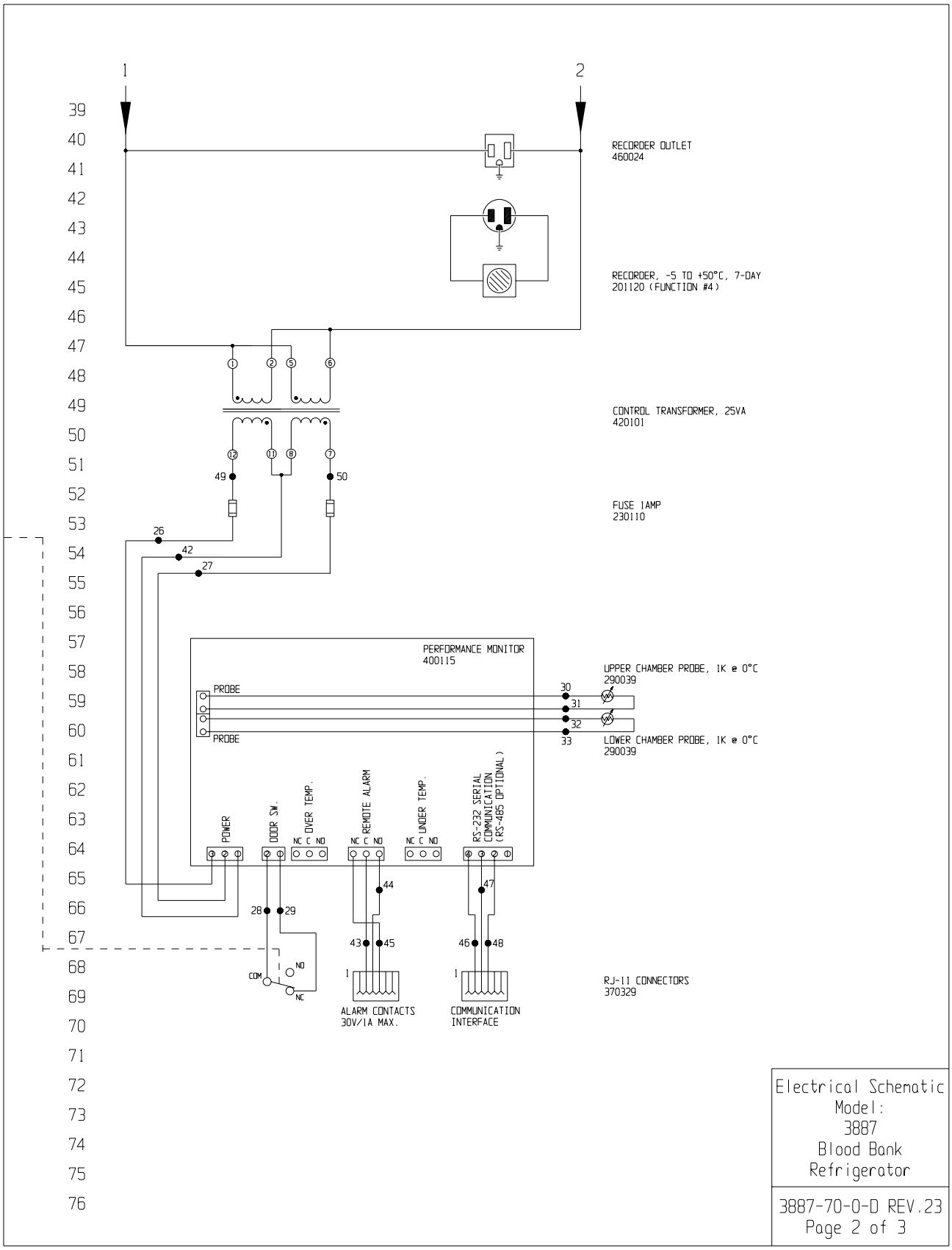
RECORDER OUTLET
460024
RECORDER, -5 TO +50°C, 7-DAY
201120 (FUNCTION #4)
CONTROL TRANSFORMER, 25VA
420101
FUSE 1AMP
230110
PERFORMANCE MONITOR
400115
PROBE
PROBE
UPPER CHAMBER PROBE, 1K @ 0°C
290039
LOWER CHAMBER PROBE, 1K @ 0°C
290039
POWER
DOOR SW.
OVER TEMP.
REMOTE ALARM
UNDER TEMP.
RS-232 SERIAL COMMUNICATION (RS-485 OPTIONAL)
NC C NO
COM
NO
NC
ALARM CONTACTS
30V/1A MAX.
COMMUNICATION
INTERFACE
RJ-11 CONNECTORS
370329
Electrical Schematic
Model:
3887
Blood Bank
Refrigerator
3887-70-0-D REV.23
Page 2 of 3

## WIRE REFERENCE CHART

| WIRE # | GAUGE | COLOR |
|---|---|---|
| 1 | 14 | BLK |
| 1A | 16 | BLK |
| 2 | 14 | WHT |
| 2A | 16 | WHT |
| 3 | 14 | GRN/YEL |
| 4 | 16 | BLU |
| 5 | 16 | ORG |
| 6 | 16 | BRN |
| 7 | 16 | BRN |
| 8 | 20 | YEL |
| 9 | 20 | YEL |
| 10 | 20 | BLU |
| 11 | 20 | BLU |
| 12 | 20 | RED |
| 13 | 20 | RED |
| 14 | 20 | YEL |
| 15 | 20 | YEL |
| 16 | 20 | BLU |
| 17 | 20 | BLU |
| 18 | 20 | RED |
| 19 | 20 | RED |
| 20 | 20 | YEL |
| 21 | 20 | YEL |
| 22 | 20 | BLU |
| 23 | 20 | BLU |
| 24 | 20 | RED |
| 25 | 20 | RED |
| 26 | 20 | YEL |
| 27 | 20 | BLU |
| 28 | 20 | BRN |
| 29 | 20 | RED |
| 30 | 22 | RED |
| 31 | 22 | WHT |
| 32 | 22 | RED |
| 33 | 22 | WHT |
| 34 | 14 | BRN |
| 35 | 14 | BLU |
| 36 | 16 | BLK |
| 37 | 16 | GRY |
| 38 | 16 | GRN |
| 39 | 16 | BLK |
| 40 | 14 | BLK |
| 40A | 18 | BRN |
| 41 | 14 | WHT |
| 41A | 18 | BLU |
| 42 | 20 | PUR |
| 43 | 22 | BLK } 22/3 W/SHIELD |
| 44 | 22 | RED } 22/3 W/SHIELD |
| 45 | 22 | WHT } 22/3 W/SHIELD |
| 46 | 22 | WHT } 22/3 W/SHIELD |
| 47 | 22 | RED } 22/3 W/SHIELD |
| 48 | 22 | BLK } 22/3 W/SHIELD |
| 49 | 20 | YEL |
| 50 | 20 | BLU |
| 51 | 18 | RED (NOT USED) |
| 52 | 18 | YEL (NOT USED) |

| REV | ECN NO. | DATE | BY | CAD | APPD | DESCRIPTION OF REVISION |
|---|---|---|---|---|---|---|
| 23 | IN-3149 | 10-06-03 | JAS | JAS | CCS | REV. LINE CORD, XFORMER WIRE COLORS |
| 22 | IN-2331 | 11-06-97 | GJG | PDK | LDN | REVISED RECORDER TO COBEX |
| 21 | SI-6707 | 09-24-97 | JAS | JAS | LDN | REVISE ARC SUPPRESSORS |
| 20 | SI-6602 | 07-07-97 | LDN | KDG | LDN | CHG. 207005 PRESSURE SW. TO 207008 |
| 19 | IN-2168 | 10-10-96 | BKH | KDG | LDN | CHANGE 420067 TRANSFORMER TO 420101 |

ATTENTION
OBSERVE PRECAUTIONS
ELECTROSTATIC
SENSITIVE DEVICES

THIS DOCUMENT CONTAINS PROPRIETARY INFORMATION AND SUCH INFORMATION IS NOT TO BE DISCLOSED TO OTHERS FOR ANY PURPOSE NOR USED FOR MANUFACTURING PURPOSES WITHOUT WRITTEN PERMISSION FROM THERMO ELECTRON

Thermo ELECTRON CORPORATION

MODEL/PART NAME: 3887 BLOOD BANK REFRIGERATOR
DWG TITLE: ELECTRICAL SCHEMATIC
DWN: GLM | CAD: DWL | APPD: LDN | DATE: 10-03-83 | SCALE: N/A
MATERIAL:
PAINT COLOR:
TOLERANCE UNLESS OTHERWISE SPECIFIED .XX=± .XXX=±
ANGLES: DECIMAL:
DRAWING NUMBER 3887-70-0
SIZE D

Electrical Schematic
Model:
3887
Blood Bank
Refrigerator

3887-70-0-D REV.23
Page 3 of 3

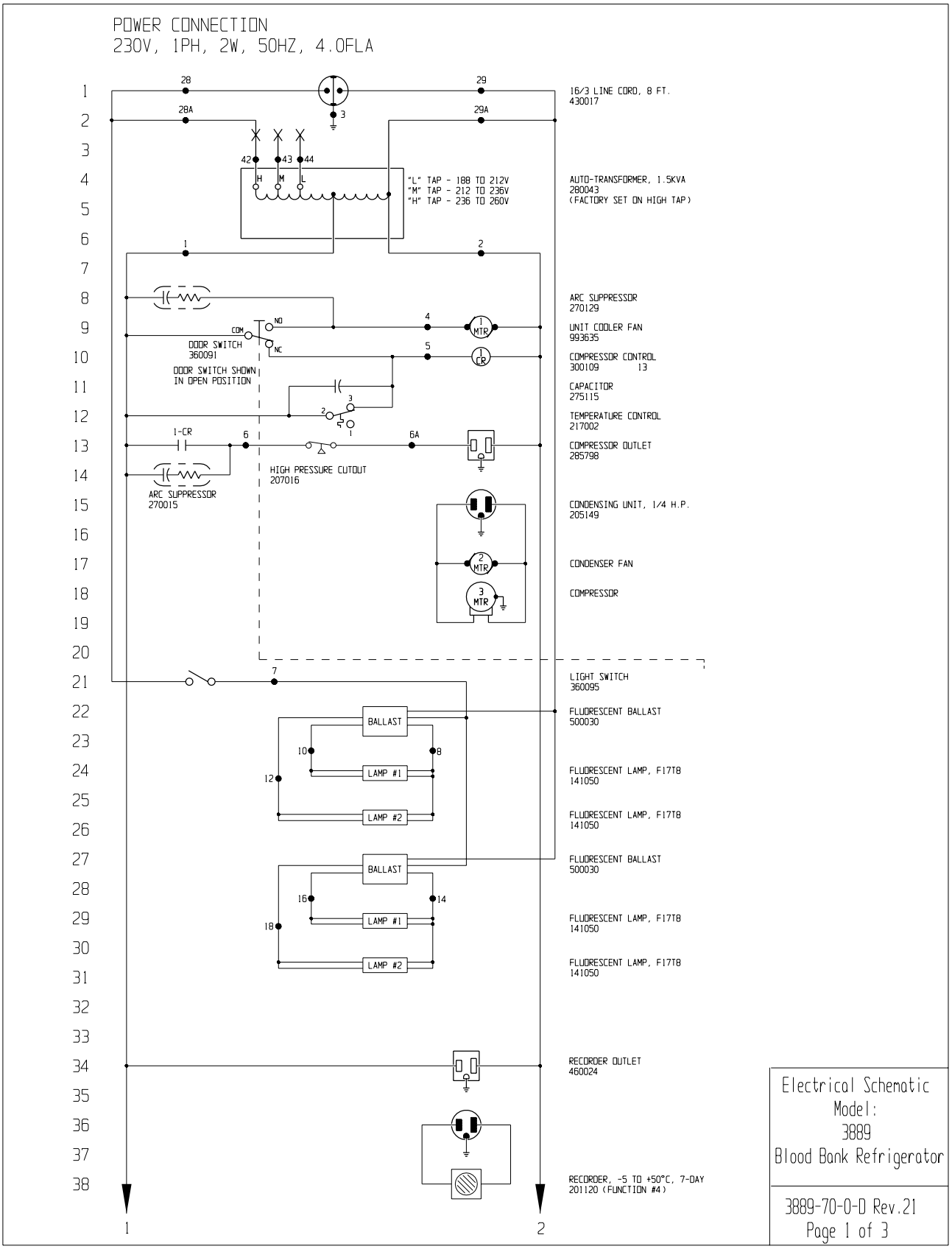
POWER CONNECTION
230V, 1PH, 2W, 50HZ, 4.0FLA
16/3 LINE CORD, 8 FT.
430017
"L" TAP - 188 TO 212V
"M" TAP - 212 TO 236V
"H" TAP - 236 TO 260V
AUTO-TRANSFORMER, 1.5KVA
280043
(FACTORY SET ON HIGH TAP)
ARC SUPPRESSOR
270129
UNIT COOLER FAN
993635
COMPRESSOR CONTROL
300109 13
CAPACITOR
275115
TEMPERATURE CONTROL
217002
COMPRESSOR OUTLET
285798
CONDENSING UNIT, 1/4 H.P.
205149
CONDENSER FAN
COMPRESSOR
LIGHT SWITCH
360095
FLUORESCENT BALLAST
500030
FLUORESCENT LAMP, F17T8
141050
FLUORESCENT LAMP, F17T8
141050
FLUORESCENT BALLAST
500030
FLUORESCENT LAMP, F17T8
141050
FLUORESCENT LAMP, F17T8
141050
RECORDER OUTLET
460024
RECORDER, -5 TO +50°C, 7-DAY
201120 (FUNCTION #4)
DOOR SWITCH
360091
DOOR SWITCH SHOWN
IN OPEN POSITION
HIGH PRESSURE CUTOUT
207016
ARC SUPPRESSOR
270015
BALLAST
LAMP #1
LAMP #2
BALLAST
LAMP #1
LAMP #2
Electrical Schematic
Model:
3889
Blood Bank Refrigerator
3889-70-0-D Rev.21
Page 1 of 3

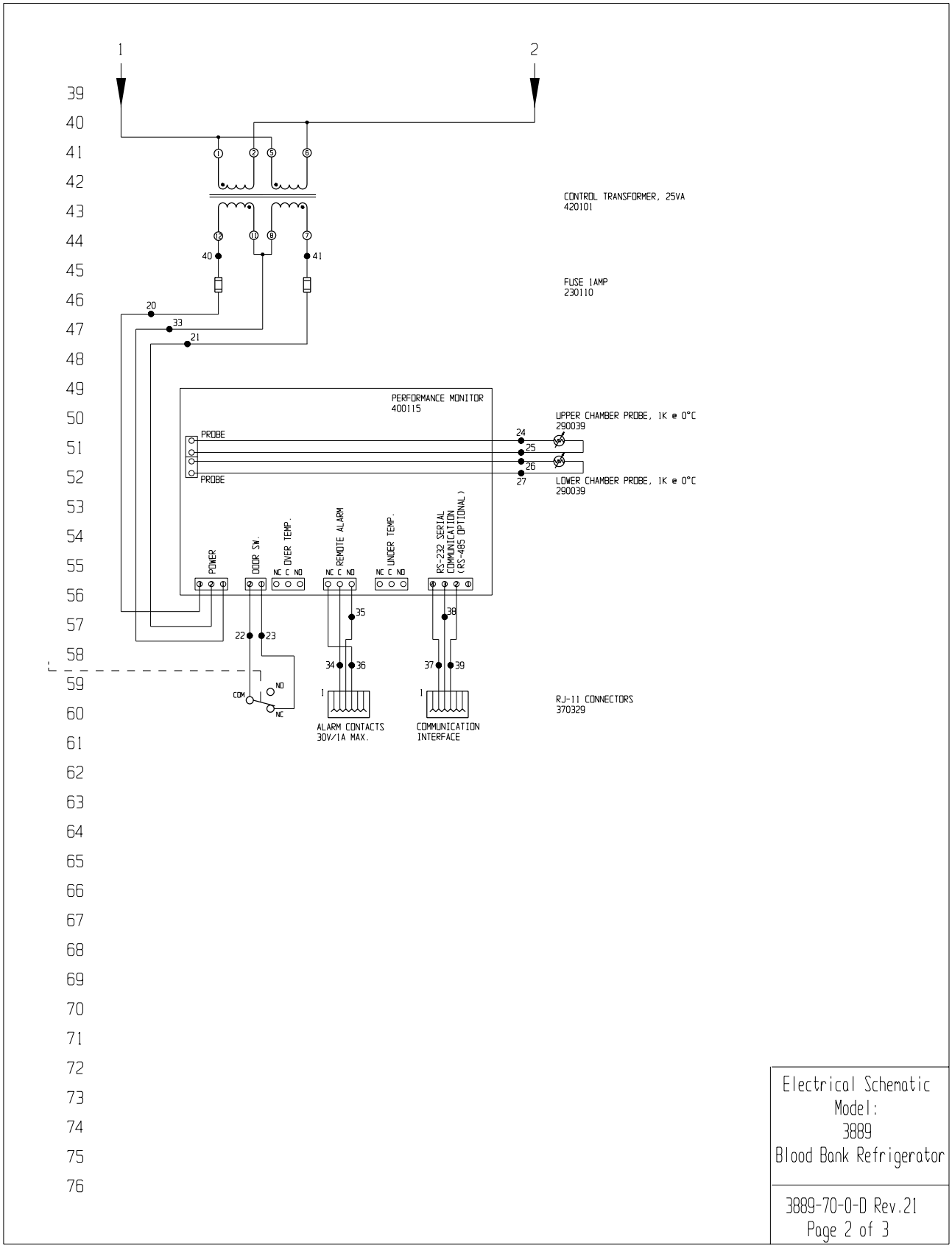
1
2
CONTROL TRANSFORMER, 25VA
420101
FUSE 1AMP
230110
PERFORMANCE MONITOR
400115
PROBE
PROBE
UPPER CHAMBER PROBE, 1K @ 0°C
290039
LOWER CHAMBER PROBE, 1K @ 0°C
290039
POWER
DOOR SW.
OVER TEMP.
REMOTE ALARM
UNDER TEMP.
RS-232 SERIAL COMMUNICATION (RS-485 OPTIONAL)
NC C NO
COM
NO
NC
ALARM CONTACTS
30V/1A MAX.
COMMUNICATION
INTERFACE
RJ-11 CONNECTORS
370329
Electrical Schematic
Model:
3889
Blood Bank Refrigerator
3889-70-0-D Rev.21
Page 2 of 3

## WIRE REFERENCE CHART

| WIRE # | GAUGE | COLOR |
|---|---|---|
| 1 | 16 | BLK |
| 2 | 16 | WHT |
| 3 | 16 | GRN/YEL |
| 4 | 16 | BLU |
| 5 | 16 | ORG |
| 6 | 16 | BRN |
| 6A | 16 | BLK |
| 7 | 16 | BRN |
| 8 | 20 | RED |
| 9 | -- | NOT USED |
| 10 | 20 | BLU |
| 11 | -- | NOT USED |
| 12 | 20 | BLU |
| 13 | -- | NOT USED |
| 14 | 20 | RED |
| 15 | -- | NOT USED |
| 16 | 20 | BLU |
| 17 | -- | NOT USED |
| 18 | 20 | BLU |
| 19 | -- | NOT USED |
| 20 | 20 | YEL |
| 21 | 20 | BLU |
| 22 | 20 | BRN |
| 23 | 20 | RED |
| 24 | 22 | RED |
| 25 | 22 | WHT |
| 26 | 22 | RED |
| 27 | 22 | WHT |
| 28 | 16 | BRN |
| 28A | 18 | BRN |
| 29 | 16 | BLU |
| 29A | 18 | BLU |
| 30 | -- | NOT USED |
| 31 | -- | NOT USED |
| 32 | 16 | GRN |
| 33 | 20 | PUR |
| 34 | 22 | BLK } 22/3 W/SHIELD |
| 35 | 22 | RED } 22/3 W/SHIELD |
| 36 | 22 | WHT } 22/3 W/SHIELD |
| 37 | 22 | WHT } 22/3 W/SHIELD |
| 38 | 22 | RED } 22/3 W/SHIELD |
| 39 | 22 | BLK } 22/3 W/SHIELD |
| 40 | 20 | YEL |
| 41 | 20 | BLU |
| 42 | 18 | RED |
| 43 | 18 | BRN (NOT USED) |
| 43 | 18 | YEL (NOT USED) |

| REV | ECN NO. | DATE | BY | CAD | APPD | DESCRIPTION OF REVISION |
|---|---|---|---|---|---|---|
| 21 | IN-3285 | 04-17-06 | GLS | GLS | AKS | REV. BALLAST, LAMPS, COND. UNIT |
| 20 | IN-3149 | 10-06-03 | JAS | JAS | LDN | REV. LINE CORD, XFORMER WIRE COLORS |
| 19 | IN-2330 | 10-20-97 | GJG | KDG | LDN | CHANGE TO COBEX RECORDER |
| 18 | SI-6707 | 09-24-97 | JAS | JAS | LDN | REVISE ARC SUPPRESSORS |
| 17 | IN-2168 | 10-10-96 | BKH | KDG | LDN | CHANGE 420067 TRANSFORMER TO 420101 |

ATTENTION
OBSERVE PRECAUTIONS
ELECTROSTATIC
SENSITIVE DEVICES

THIS DOCUMENT CONTAINS PROPRIETARY INFORMATION AND SUCH INFORMATION IS NOT TO BE DISCLOSED TO OTHERS FOR ANY PURPOSE NOR USED FOR MANUFACTURING PURPOSES WITHOUT WRITTEN PERMISSION FROM THERMO ELECTRON

Thermo
ELECTRON CORPORATION

MODEL/PART NAME: 3889 BLOOD BANK REFRIGERATOR
DWG TITLE: ELECTRICAL SCHEMATIC
DWN: GLM | CAD: DWL | APPD: LDN | DATE: 10-03-83 | SCALE: N/A
MATERIAL:
PAINT COLOR:
TOLERANCE UNLESS OTHERWISE SPECIFIED
ANGLES: DECIMAL: .XX=± .XXX=±
DRAWING NUMBER 3889-70-0
SIZE D

Electrical Schematic
Model:
3889
Blood Bank Refrigerator

3889-70-0-D Rev.21
Page 3 of 3

# THERMO FISHER SCIENTIFIC BLOOD BANK EQUIPMENT PRODUCT WARRANTY

The Warranty Period starts two weeks from the date your equipment is shipped from our facility. This allows for shipping time so the warranty will go into effect at approximately the same time your equipment is delivered. The warranty protection extends to any subsequent owner during the first year warranty period.

During the first year, component parts proven to be non-conforming in materials or workmanship will be repaired or replaced at Thermo's expense, labor included. Installation and calibration are not covered by this warranty agreement. The Technical Services Department must be contacted for warranty determination and direction prior to performance of any repairs. Expendable items, glass, filters and gaskets are excluded from this warranty.

Labor Warranty Exceptions: 1) The labor warranty for blast freezers applies only if the installation is performed by authorized Thermo personnel. If the installation is not done by Thermo personnel, then the warranty pertains to replacement parts only. 2) The labor warranty for platelet reciprocators applies only if the reciprocator is returned to Thermo with freight charges prepaid by the customer.

Replacement or repair of components parts or equipment under this warranty shall not extend the warranty to either the equipment or to the component part beyond the original warranty period. The Technical Services Department must give prior approval for return of any components or equipment. At Thermo's option, all non-conforming parts must be returned to Thermo postage paid and replacement parts are shipped FOB destination.

**THIS WARRANTY IS EXCLUSIVE AND IN LIEU OF ALL OTHER WARRANTIES, WHETHER WRITTEN, ORAL OR IMPLIED. NO WARRANTIES OF MERCHANTABILITY OR FITNESS FOR A PARTICULAR PURPOSE SHALL APPLY.** Thermo shall not be liable for any indirect or consequential damages including, without limitation, damages relating to lost profits or loss of products.

Your local Thermo Sales Office is ready to help with comprehensive site preparation information before your equipment arrives. Printed instruction manuals carefully detail equipment installation, operation and preventive maintenance.

If equipment service is required, please call your Technical Services Department at 1-888-213-1790 (USA and Canada) or 1-740-373-4763. We're ready to answer your questions on equipment warranty, operation, maintenance, service and special application. Outside the USA, contact your local distributor for warranty information.

ISO 9001 REGISTERED

Rev. 2 2/07

# THERMO FISHER SCIENTIFIC INTERNATIONAL DEALER WARRANTY

The Warranty Period starts two months from the date your equipment is shipped from our facility. This allows for shipping time so the warranty will go into effect at approximately the same time your equipment is delivered. The warranty protection extends to any subsequent owner during the first year warranty period. Dealers who stock our equipment are allowed an additional six months for delivery and installation, provided the warranty card is completed and returned to the Technical Services Department.

During the first year, component parts proven to be non-conforming in materials or workmanship will be repaired or replaced at Thermo's expense, labor excluded. Installation and calibration are not covered by this warranty agreement. The Technical Services Department must be contacted for warranty determination and direction prior to performance of any repairs. Expendable items, glass, filters, reagents, tubing, and gaskets are excluded from this warranty.

Replacement or repair of components parts or equipment under this warranty shall not extend the warranty to either the equipment or to the component part beyond the original warranty period. The Technical Services Department must give prior approval for return of any components or equipment. At Thermo's option, all non-conforming parts must be returned to Thermo postage paid and replacement parts are shipped FOB destination.

**THIS WARRANTY IS EXCLUSIVE AND IN LIEU OF ALL OTHER WARRANTIES, WHETHER WRITTEN, ORAL OR IMPLIED. NO WARRANTIES OF MERCHANTABILITY OR FITNESS FOR A PARTICULAR PURPOSE SHALL APPLY.** Thermo shall not be liable for any indirect or consequential damages including, without limitation, damages relating to lost profits or loss of products.

Your local Thermo Sales Office is ready to help with comprehensive site preparation information before your equipment arrives. Printed instruction manuals carefully detail equipment installation, operation and preventive maintenance.

If equipment service is required, please call your Technical Services Department at 1-888-213-1790 (USA or Canada), or 1-740-373-4763. We're ready to answer your questions on equipment warranty, operation, maintenance, service and special application. Outside the USA, contact your local distributor for warranty information.

Rev. 3 2/07

ISO 9001 REGISTERED

Thermo Scientific
Controlled Environment Equipment
401 Millcreek Road
Marietta, Ohio 45750
United States

www.thermo.com