ThermoFisher SCIENTIFIC	Cold Storage Specification Sheet	Date	3/17/2015
		Revision	B

Brand	Thermo Scientific
Type	Cryo Preservation System
Model	7402
Product	Cryo Plus 200L Storage system

Application: Long term storage of biological samples at cryogenic temperatures

Product Attributes	
Sample Access	UL61010 3rd edition compliant hinged lid allowing for sample access (see drawing on reverse side)
Temperature Display	Digital Temperature display
Controller	Yes (Microprocessor based controller)
Security Lock	keyed lid lock for sample security / keyed lock on the controller for set-point security
Interior material	Stainless steel
Exterior material	Cold-rolled steel with powder-coated paint
LN2 Capacity (Liters)	200L
Max 2 ml Vial Capacity	13,500 (using vertical racks)
No of Racks	(10) square racks or (27) vertical racks
static evaporation rate *	5 liters per day
Casters / Leveling feet	3" casters standard
Level Monitor	24 tricolor LEDs
Fill Mechanism	Standard auto fill mechanism with hi/low level set point
Insulation	Vacuum-insulated, stainless-steel chamber
Remote Alarm	Remote alarm terminals standard (NO/NC)
Dimensional Data	
External Dimensions (DxWxH)	34 x 28.5 x41 in. 86.4 X 72.4 X 104.1 cm
Usable Interior Diameter (D)	24.0" (61 cm)
Usable interior Height (H)	27.5" (69.9 cm)
Packaged Dimensions (DxWxH)	45 x 49 x 53 in 114.3 x 124.5 x 134.6 cm
Empty Weight (lbs & kg)	429 lbs. / 194.6 kg
Full Weight (lbs & kg)	680 lbs./ 308.4 kg
Packaged / Shipping Weight (lbs&kg)	487 lbs./ 220.9 kg
Refrigeration Data	
Cooling Method	Liquid Nitrogen
Operation Temp Range	Vapor phase gradient of -135C to -196C depending on LN2 level
LN2 level Set Point	factory default pre-set to 5" high limit and 3" low limit, can be user defined, see manual
Utility Connections	1/2" 45° Flare (6 foot flex SS transfer hose included)
Electrical / Installation	
Power requirements	100/120V, 50/60 Hz
AMPS	0.8 FLA
Power cord plug type and length	NEMA 5-15P Plug
Minimum Air Clearance Required	Add 5 in. (12.7 cm) to F-B for utilities and lid opening
Recommended Ambient Conditions	15°C-35°C temperature range, 20%-80% RH (non condensing)
AGENCY LISTING	CFDA, cULus and CE
WARRANTY	US-1 year parts and labor, 2 years vacuum integrity International- 1 year parts, 2 years vacuum integrity
Intended Use	Long term storage of biological samples at cryogenic temperatures
Product Life	7 Years
* not to be used for calculating total LN2 consumption	

CRYOPLUS 7402 PRODUCT DRAWING

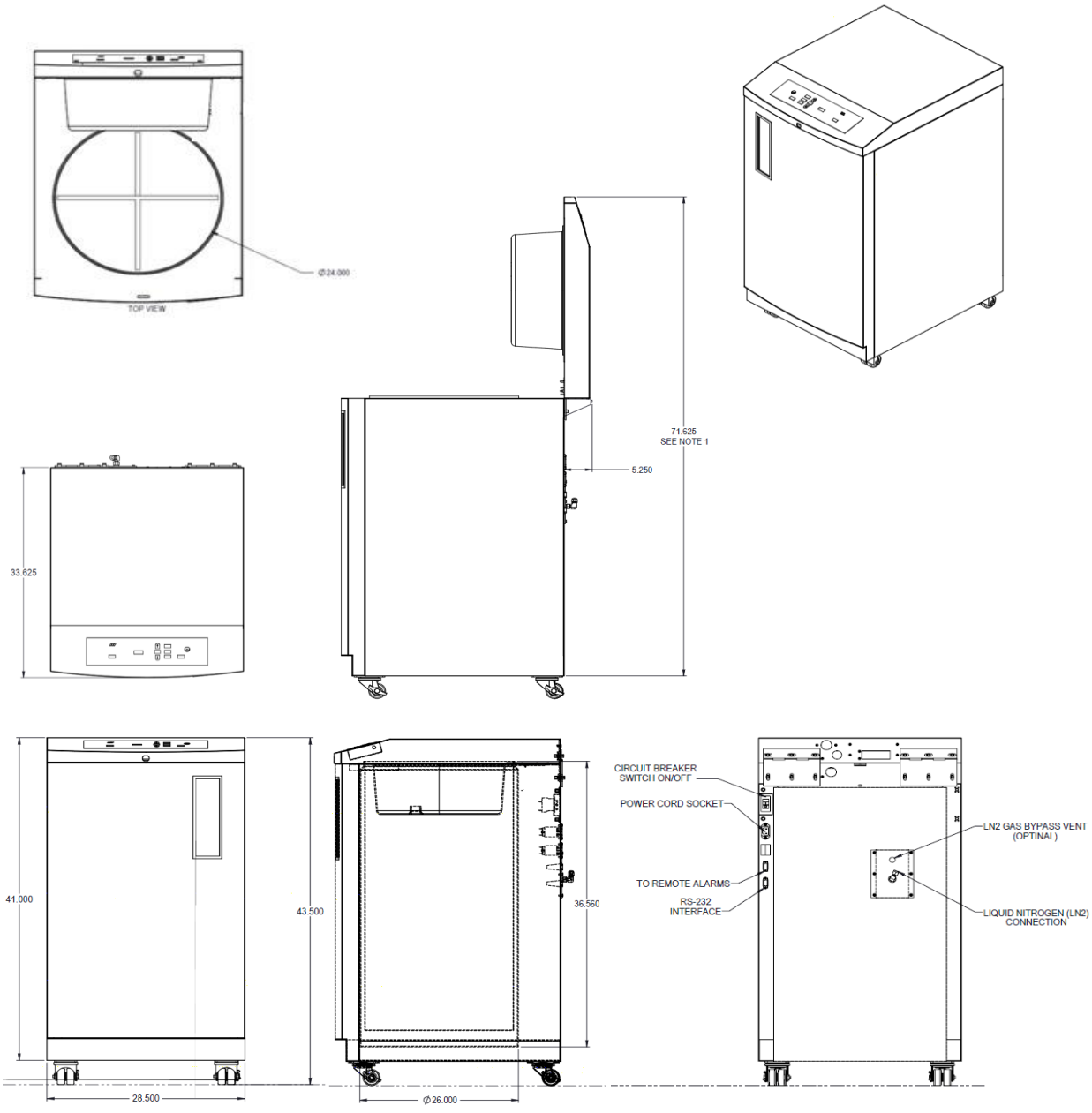

1.ALLOW AN ADDITIONAL 1.500" TO TOTAL HEIGHT
IF THE KEY REMAINS IN THE LID.

Rev: -
Date:
Signed by:

ThermoFisher SCIENTIFIC