Micro Compression Cell and
Micro Compression Diamond Cell Kit
User's Manual

P/N 0045-344 and 0045-434

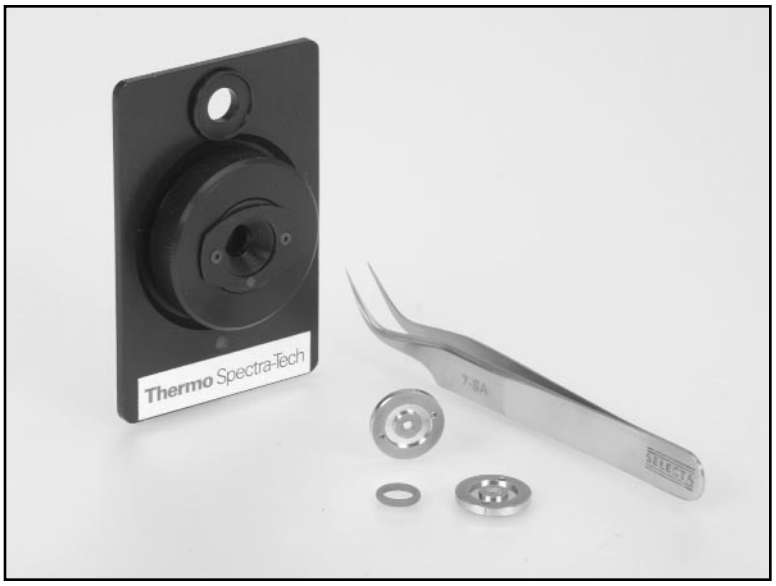

P/N 700-0162

Version 1.9

Thermo Spectra-Tech

A Thermo Electron business

Table of Contents

General Information

The Manual

This manual is designed as a tutorial to guide you through a typical application of the Micro Compression Cell and Micro Compression Diamond Cell. It is recommended, however, that you familiarize yourself with the operation of your FT-IR microscope before using either of the Micro Compression Cells.

Packing & Unpacking

The Micro Compression Cells are shipped in a protective foam filled box. Upon arrival please check the box to ensure that all pieces have been received and that no pieces are damaged. Save the box for storage and shipment of the cells and their components.

Technical Support Center

Technical materials describing the use and theory of attenuated total reflectance, diffuse reflectance and specular reflectance are available from Thermo Spectra-Tech. Additionally, a team of scientists is available at Thermo Spectra-Tech to answer any of your questions. If you encounter any problems or difficulties, or desire additional information please contact the Technical Support Center at 800-THE-FTIR.

Copyrights & Trademarks

Contact Thermo Spectra-Tech

230 Long Hill Cross Rd.
PO Box 869
Shelton, Connecticut 06484-0869
Phone: 203-926-8998, or 800-THE FTIR
Fax: 203-926-8909
www.thermospectra-tech.com
info@thermospectra-tech.com

General Information

Product Description

The Micro Compression Cell and Micro Compression Diamond Cell are sample holders used to flatten and crush samples for transmission analysis in an IR microscope. The cells each consist of a metal holder with a screw assembly that holds two windows. The sample is placed between the two windows and a screw cap is tightened to flatten and thin the sample. Both cells use a piston action design to apply uniform pressure across the sample. The windows compress in a parallel manner rather than using a rotational motion, maintaining sample position and preventing smears. The cells fit securely on all microscope stages and are compatible with Thermo Spectra-Tech's 15X and 32X Reflachromat Objectives.

The Micro Compression Cell, used for soft, elastomeric samples, requires the purchase of two 13 mm diameter windows. IR transmitting windows for this cell are available in NaCl, KBr, ZnSe and BaF_2 to accommodate specific application requirements. For information on the appropriate window material, please refer to Thermo Spectra-Tech's guide, "Properties of Infrared Crystals" which can be found on the web at www.thermospectra-tech.com, on the "Crystal Referance Card" or in the "Crystal Referance Guide". The IR transmitting windows have a 7.0 mm diameter working area. When using these windows, it is not recommended that substantial pressure be applied because they might crack. To minimize this possibility, a very small amount of the sample should be placed in the Micro Compression cell, or the sample should be flattened before placing it between the windows of the Micro Compression Cell.

When an application requires the crushing or flattening of intractable samples, it is recommended that the Micro Compression Diamond Cell be used. The Micro Compression Diamond Cell is useful for flattening and crushing hard samples such as rigid polymers and minerals and comes as a kit that includes two 2 mm square diamond windows mounted in holders 13 mm in diameter. The diamond windows are flat, parallel, type IIA diamonds with no facets. The diamond windows have a 1.8 mm diameter working area. A window insertion tool is also included with the kit. Windows from the Micro Compression Cell can also be used in the Micro Compression Diamond Cell.

Operation

Using the Micro Compression Cell with Standard 13mm windows

NOTE: Use these instructions with the Micro Compression Cell (0045-344) or Micro Compression Diamond Cell (0045-434) using 13 mm IR windows. Refer to page 8 when using diamond windows in 13 mm mounts.

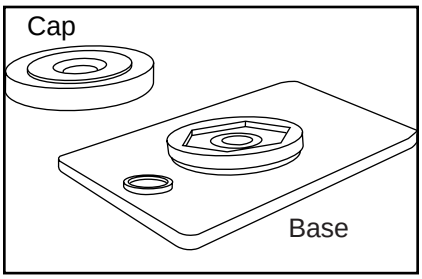

Unscrew the cap from the compression cell.

Unscrew the top cap from the base of the Micro Compression Cell.

Insert one window.

Place one window in the circular opening in the center of the base.

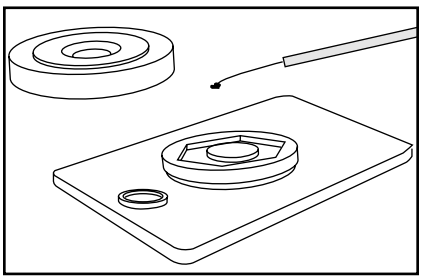

Sandwich the sample.

Read the caution below. If necessary, flatten the sample and then use a probe to place the sample in the center of the bottom window in the base.

Determine which method will be used to collect a background spectrum (refer to Appendex C for information on Background Spectral Collection). If the KBr crystal method is chosen , place a single crystal of powdered KBr on the window next to, but not touching, the sample.

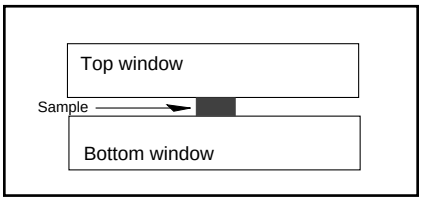

Place the top window directly on top of the sample. Be certain that the two windows are aligned with each other.

CAUTION: The quantity of sample used is critical. Too much sample can cause the standard 13mm windows to crack. For soft or elastomeric samples, 15 µm to 30 µm particles are ideal. When the sample is more rigid, it is recommended that it is preflattened with the roller knife (which is included in the sample-preparation kit for all Thermo Spectra-Tech Microscopes) or that you use the Micro Compression Diamond Cell. Once the sample is flattened, it may be transferred to the Micro Compression Cell's window.

Operation

Using the Micro Compression Cell with Standard 13mm windows

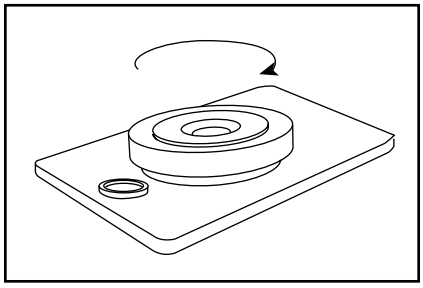

Replace the cap.

Screw the cap down carefully just until the screw threads catch.

While observing the sample, (a stereomicroscope is recommended) tighten the cap until the sample and KBr crystal (if used) contact the windows. It is useful to watch the sample and KBr as they are being flattened.

Set compensation settings.

To achieve optimum energy throughput and image quality, set the objective and condenser compensation settings so they match the thickness of the window being used.

For post-1991 Reflachromat™ objectives (the word “Reflachromat” appears on the objective) and condensers, the compensating ring has gradations of 0, 0.17, 1.0, 2.0, and 3.0. These numbers correspond to the thickness of a standard window (KBr) in millimeters. Set the objective's compensation ring to the thickness of the top window above the sample.

Set the compensating ring on the condenser to the thickness of the bottom window under the sample.

For pre-1991 Reflachromat objectives and condensers, the compensating ring has evenly-spaced marks. Consult the table in Appendix A (page 13) for the correct settings for each window.

For standard Cassegrain objectives (zero fixed compensation) and condensers (2 mm fixed compensation—those on Analytical microscopes) a 2 mm window should be used below the sample, while a 1 mm window should be used above the sample. Alternatively, an additional Cassegrain objective with 2 mm fixed compensation can be purchased (PN 0047-412).

Note: Some pre-1990 Reflachromat™ reflecting objectives have a cone-shaped baffle at the bottom of the optic to allow for clearance of the compression cell. This baffle must be removed when using the compression cell. This is accomplished by loosening the three screws in the bottom plate; a 0.035 inch hexagonal head (with a red handle) is included in the tool kit for this purpose.

Operation

Using the Micro Compression Cell with Standard 13mm windows

Acquire a sample single-beam spectrum.

Place the Micro Comression Cell in the microscope.

Focus and aperture down on the sample.

Acquire a sample spectrum.

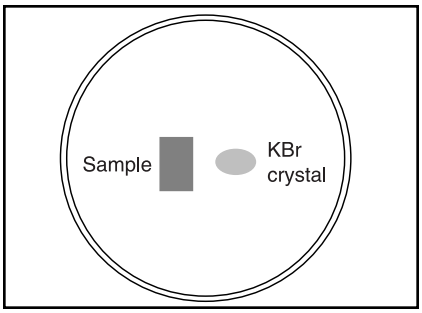

Acquire a background spectrum (KBr Crystal method).

If the KBr Crystal method was chosen (refer to Appendex C) run the background spectrum on the KBr crystal (with the same aperture size used for the sample).

Ratio against the previously acquired sample spectrum.

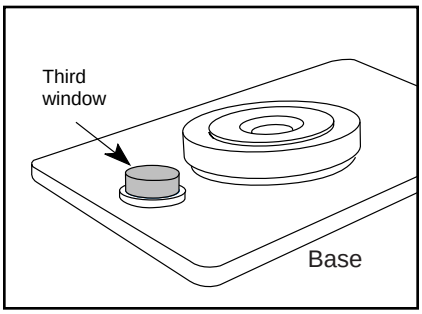

Acquire a background spectrum (Third Window method).

If the Third Window method was chosen (refer to Appendex C) place a third window (one that is made of the same material used in the cell and is equal to the total thickness of the first two windows) in the circular detent to the side of the screw cap (e.g., if you are using two 1 mm BaF_2 windows in the cell, use a single 2 mm BaF_2 window to obtain the background spectrum). Move over to this window without changing the aperture size and collect the background spectrum.

Ratio against the previously acquired sample spectrum.

Operation

Using the Micro Compression Cell with Diamond Windows

NOTE: Use these instructions with the Micro Compression Diamond Cell (0045-434) with Diamond windows in 13 mm mounts. Refer to page 5 when using standard 13 mm windows.

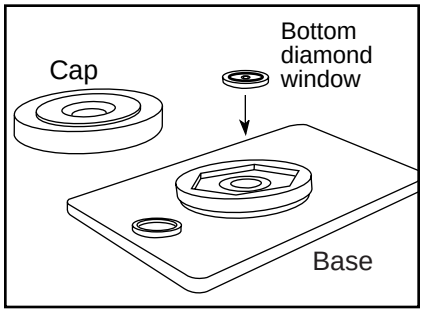

Unscrew the cap.

Unscrew the cap from the base of the Micro Compression Diamond Cell.

Insert one window.

Place one diamond window in the circular opening in the center of the base of the cell. Place the o-ring into the groove of the bottom diamond window.

WARNING! You must place the o-ring in between the diamond cell windows or the warranty will be void!

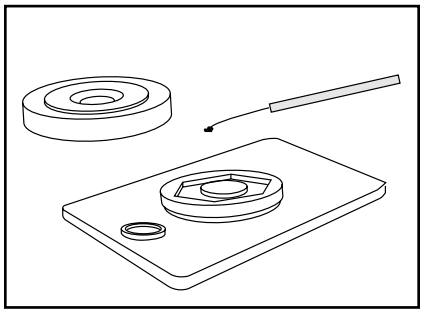

Sandwich the sample.

Read the caution on page 9 and then use a probe to place the sample in the center of the bottom diamond window.

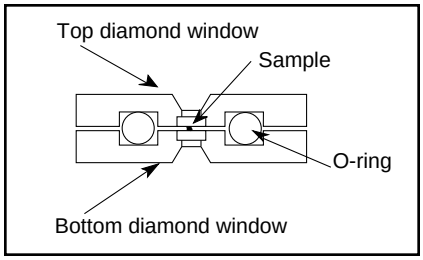

Operation

Using the Micro Compression Cell with Diamond Windows

CAUTION: The quantity of sample used is critical for proper flattening or crushing. Too much sample will produce a sample too thick for transmission analysis. For soft or elastomeric samples, 15 µm to 30 µm particles are ideal.

Determine which method will be used to collect a background spectrum (refer to Appendex C for information on Background Spectral Collection).

If the **KBr Crystal method** is chosen, place a single crystal of powdered KBr on the diamond window next to, but not touching, the sample.

Place the top diamond window directly on top of the sample. Be certain that the two holes in the top window line up with the two holes in the bottom window.

Operation

Using the Micro Compression Cell with Diamond Windows

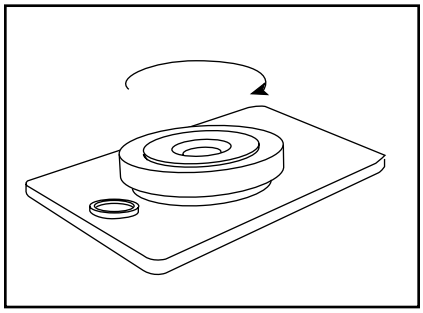

Replace the cap.

Screw the cap down carefully just until the screw threads catch.

While observing the sample, (a stereo microscope is recommended) tighten the cap until the sample and KBr (if used) contact the windows. It is useful to watch the sample and KBr as they are being flattened.

CAUTION: Hand tighten only! Do not use tools to tighten the cap on the base of the cell.

If the **Single Window method** is being used to collect the sample and background spectra, remove the cap. Gently remove the top window. The sample should adhere to one window. Place that window into the base with the sample facing up.

Set compensation settings.

Refer to the “Set compensation settings” step on page 6 to determine the proper settings for your system.

If the KBr method is being used to collect the background spectrum, set the compensation settings on both the objective and condenser for 1 mm.

If the Single Window method is being used to collect the background spectrum, set the compensation settings on the objective for 0 mm and condenser for 1 mm.

Aquire a sample single-beam specrtrum

Place the Micro Comression Cell in the microscope.

Focus and aperture down on the sample.

Acquire sample spectrum.

Operation

Using the Micro Compression Cell with Diamond Windows

Acquire a background spectrum (KBr Crystal method).

If the KBr Crystal method was chosen (refer to Appendex C) run the background spectrum on the KBr crystal (with the same aperture size used for the sample).

Ratio against the previously acquired sample spectrum.

Acquire a background spectrum (Single Diamond Window method).

If the Single Diamond Window method was chosen (refer to Appendex C) run the background spectrum on a clear area of the window next to the sample (with the same aperture size used for the sample).

Cleaning Methods for Diamond Windows

The diamond windows in 13 mm mounts have been designed expressly for use with FT-IR microscopes and permit samples to be compressed to a point where they may be analyzed in transmission. To prolong the life of your diamond window assemblies, the cleaning suggestions listed below may be useful in your laboratory.

Method 1. Clean the surface using a cotton swab, wooden spatula or lint-free tissue.

Method 2. If the sample material cannot be removed using Method 1, distilled water should be used.

Method 3. If Methods 1 and 2 fail, the use of organic solvents might be necessary. Only Organic solvents should be used sparingly! The excess solvent should be immediately wiped away with a lint-free tissue and the diamond window should be dried.

CAUTION: Do NOT use chlorinated solvents.

Appendix A

Spherical Correction

The following tables are designed as quick reference guides to determine the approximate separation change required to correct for spherical aberrations when using standard IR materials to mount or cover samples on the IR-Plan® microscope. These are approximate figures which do not account for variations in refractive index due to wavelength.

How to use the Spherical Correction Tables:

1. Determine which lenses (objective, condenser or both) require correction by observing the following guidelines:
    - a Sample on top of a window: Adjust condenser counter-clockwise.
    - b. Sample between two windows or imbedded in a material: Adjust condenser counter-clockwise and objective clockwise.
    - c Sample under a window: Adjust objective clockwise.
2. Determine the thickness of the window material between the objective (condenser) and the sample. Locate this value in the left hand column of the appropriate table(s).

Note: You must correct for aberrations between both the objective and the condenser.

3. Locate the appropriate correction for the window material you are using.
4. Rotate the objective and/or condenser compensation ring the suggested number of divisions in the direction specified above (see #1).
5. Refocus the microscope. Make additional fine corrections as required.

Appendix A

Correction Tables for Pre-1991 Reflachromat Objectives

(values represent approximate number of divisions or markings)

15X Reflachromat Objective

Thickness	BaF2	NaCl	KBr	ZnSe	KRS-5
0.5mm	3.7	3.8	3.9	3.6	3.6
1.0mm	7.4	7.7	7.8	7.2	7.2
1.5mm	11.1	11.5	11.6	10.7	10.8
2.0mm	14.8	15.3	15.5	14.7	14.4
2.5mm	18.4	19.2	19.4	17.9	18.0
3.0mm	22.1	23.0	23.3	21.5	21.6
3.5mm	25.8	26.8	27.1	25.0	25.2
4.0mm	29.5	30.6	31.0	28.6	28.8

32X Reflachromat Objective

Thickness	BaF2	NaCl	KBr	ZnSe	KRS-5
0.5mm	7.9	7.3	7.4	6.8	8.3
1.0mm	14.1	14.6	14.8	13.6	13.7
1.5mm	21.2	21.9	22.2	20.4	20.6
2.0mm	28.3	29.2	29.6	27.2	27.4
2.5mm	35.3	36.5	37.0	34.0	34.3
3.0mm	42.4	43.8	44.6	40.8	41.1
3.5mm	49.5	51.0	51.8	47.7	48.0
4.0mm	56.5	58.3	59.2	54.5	54.9

10X Reflachromat Condenser

Thickness	BaF2	NaCl	KBr	ZnSe	KRS-5
0.5mm	7.4	7.7	7.8	7.2	7.2
1.0mm	14.7	15.3	15.5	14.3	14.4
1.5mm	22.1	23.0	23.3	21.5	21.6
2.0mm	29.5	30.6	31.0	28.6	28.8
2.5mm	36.9	38.3	38.8	35.8	36.0
3.0mm	44.2	46.0	46.5	42.9	43.2
3.5mm	51.6	53.6	54.3	50.1	50.4
4.0mm	59.0	61.3	62.0	57.2	57.6

Appendix B

Pre 1991 15X Objective and 10X Condenser Diagrams

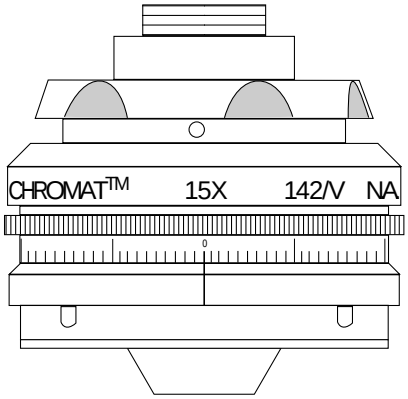

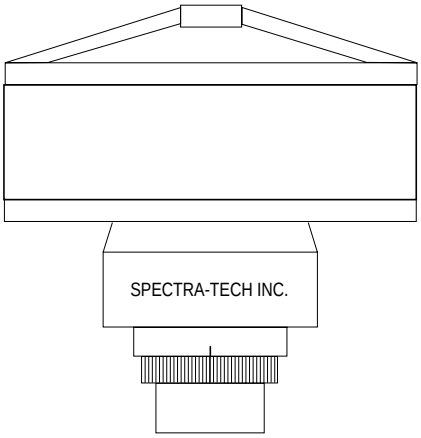

Appendix B

Post 1991 15X Objective and 10X Condenser Diagrams

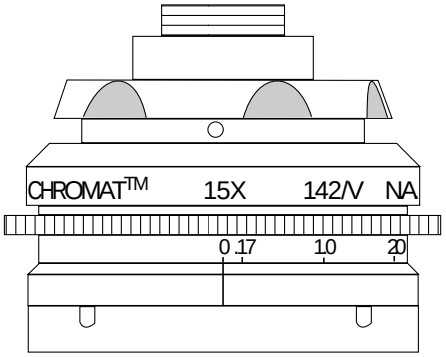

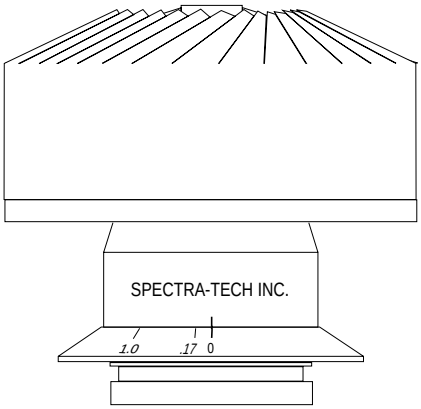

Appendex C

Background Spectral Collection Methods

Micro Compression Cells with Standard 13 mm IR Windows

When using the Micro Compression Cell or Micro Compression Diamond Cell with standard 13 mm IR windows, there are two methods for acquiring a background spectrum: The KBr Crystal method and the Third Window method.

The **KBr Crystal method** requires the user to place a single powdered KBr crystal on the window next to but not touching the sample. This can eliminate interference fringing by reducing the probability of internal reflection within the sample. The probability of internal reflection is reduced because because the refractive index of the infrared window is closer to the sample's refractive index than is air. It is necessary to scan the background through the single KBr crystal (B1) because the sample prevents the two windows from contacting each other. Collecting a background in an area adjacent to the sample (B2) would result in an interference fringe (which is generated in the background rather than the sample) because of the air gap between the two windows.

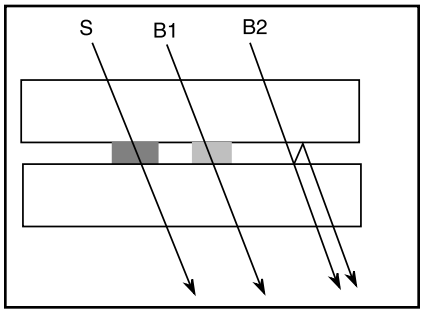

The **Third Window method** allows the user to assemble the cell containing only the sample. A single window equal to the thickness of both windows used in the cell, and of the same IR material, is placed in a detent near the screw cap.

For example, if 1 mm BaF_2 windows are in the cell, a 2 mm BaF_2 window will be used to collect the background spectrum.

Micro Compression Cell with Diamond windows

When using the Micro Compression Diamond Cell with diamond windows, there are two methods for acquiring a background spectrum and the sample spectrum: The KBr Crystal method and the Single Diamond Window method.

The **KBr Crystal method** is described in detail above.

The **Single Diamond Window method** is useful for crushing samples without a memory. This method may not be useful for Elastomers, Polymers and Rubbers due to the sample memory property. With this method, the sample is compressed between the two diamond windows, the cell is opened, the diamond windows are seporated, and the window to which the sample adheres is placed back in the holder. The sample spectrum is taken and the background spectrum is then taken on a clear area of the window next to the sample.

Thermo Spectra-Tech

Empowering Your FT-IR

A Thermo Electron business

www.thermospectra-tech.com
e-mail: info@thermospectra-tech.com

Thermo Spectra-Tech
230 Long Hill Cross Rd.
PO Box 869
Shelton, CT 06484-0869

Phone: 203-926-8998
800-THE-FTIR
Fax: 203-926-8909