thermoscientific

Micro Compression Cell and Micro Compression Diamond Cell Kit

User Guide

269-322400 Revision A • March 2017

ThermoFisher SCIENTIFIC

For U.S. Technical Support, please contact:

Unity Lab Services
Part of Thermo Fisher Scientific
5225 Verona Road
Madison WI 53711-4495 U.S.A.
Telephone: 1 800 532 4752
E-mail: us.techsupport.analyze@thermofisher.com

For International Support, please contact:

Thermo Fisher Scientific
Telephone: +1 608 273 5017
E-mail: support.madison@thermofisher.com

For Research Use Only. This instrument or accessory is not a medical device and is not intended to be used for the prevention, diagnosis, treatment or cure of disease.

WARNING Avoid an explosion or fire hazard. This instrument or accessory is not designed for use in an explosive atmosphere.

Micro Compression Cell and Micro Compression Diamond Cell Kit User Guide

Contents

Conventions Used

CAUTION Indicates a hazardous situation which, if not avoided, could result in minor or moderate injury.

NOTICE Follow instructions with this label to avoid damaging the system hardware or losing data.

Note Contains helpful supplementary information.

Product Description

The Micro Compression Cell and Micro Compression Diamond Cell are sample holders used to flatten and crush samples for transmission analysis in an IR microscope. The cells each consist of a metal holder with a screw assembly that holds two windows. The sample is placed between the two windows and a screw cap is tightened to flatten and thin the sample. Both cells use a piston action design to apply uniform pressure across the sample. The windows compress in a parallel manner rather than using a rotational motion, maintaining sample position and preventing smears. The cells fit securely on all microscope stages and are compatible with 10X, 15X and 32X Reflachromat Objectives.

The Micro Compression Cell, used for soft, elastomer samples, requires the purchase of two 13 mm diameter windows. IR transmitting windows for this cell are available in NaCl, KBr, ZnSe and BaF_2 to accommodate specific application requirements. For information on the appropriate window material, please refer to the *Crystal Reference Sheet* that came with the

documentation for your system. The IR transmitting windows have a 7.0 mm diameter working area. When using these windows, it is not recommended that substantial pressure be applied because they might crack. To minimize this possibility, a very small amount of the sample should be placed in the Micro Compression cell, or the sample should be flattened before placing it between the windows of the Micro Compression Cell.

When an application requires the crushing or flattening of intractable samples, it is recommended that the Micro Compression Diamond Cell be used. The Micro Compression Diamond Cell is useful for flattening and crushing hard samples such as rigid polymers and minerals and comes as a kit that includes two 2 mm square diamond windows mounted in holders 13 mm in diameter. The diamond windows are flat, parallel, type IIA diamonds with no facets. The diamond windows have a 1.8 mm diameter working area. A window insertion tool is also included with the kit. Windows from the Micro Compression Cell can also be used in the Micro Compression Diamond Cell.

Operation

Contents

Micro Compression Cell With Standard 13 mm Windows

❖ To use the Micro Compression Cell with standard 13 mm windows

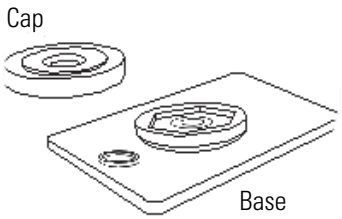

1. Unscrew the top cap from the base of the Micro Compression Cell.
2. Insert one window.

   Place one window in the circular opening in the center of the base.

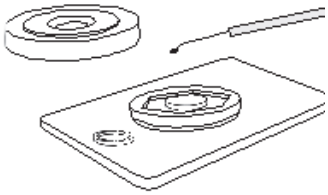

3. Sandwich the sample.
   a. If necessary, flatten the sample and then use a probe to place the sample in the center of the bottom window in the base.
   b. Determine which method will be used to collect a background spectrum (see "Appendix C" on page 13 for information on Background Spectral Collection Methods).
   c. If the KBr crystal method is chosen, place a single crystal of powdered KBr on the window next to, but not touching, the sample.
   d. Place the top window directly on top of the sample.

      Be certain that the two windows are aligned with each other.

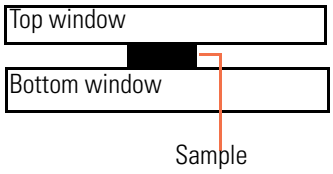

NOTICE The quantity of sample used is critical. Too much sample can cause the standard 13mm windows to crack. For soft or elastomer samples, 15 µm to 30 µm particles are ideal. When the sample is more rigid, it is recommended that it is preflattened with the roller knife or that you use the Micro Compression Diamond Cell. Once the sample is flattened, it may be transferred to the Micro Compression Cell's window.

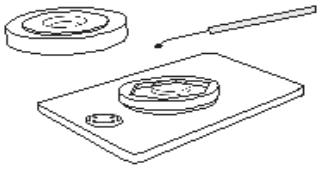

4. Replace the cap.

   Screw the cap down carefully just until the screw threads catch.

   While observing the sample, (a stereo microscope is recommended) tighten the cap until the sample and KBr crystal (if used) contact the windows. It is useful to watch the sample and KBr as they are being flattened.

5. Set compensation settings.

   The Continuum microscope comes equipped with a means to compensate for the spherical aberrations due to the thickness of the compression cell windows. *Skip this step if you do not have a Continuum microscope*.

   To achieve optimum energy throughput and image quality, set the objective and condenser compensation settings so they match the thickness of the window being used.

   For post-1991 Reflachromat™ objectives (the word "Reflachromat" appears on the objective) and condensers, the compensating ring has gradations of 0, 0.17, 1.0, 2.0, and 3.0. These numbers correspond to the thickness of a standard window (KBr) in millimeters.

   Set the objective's compensation ring to the thickness of the top window above the sample. Set the compensating ring on the condenser to the thickness of the bottom window under the sample.

   For pre-1991 Reflachromat objectives and condensers, the compensating ring has evenly-spaced marks. Consult the table in "Appendix A" on page 9 for the correct settings for each window.

   Note Some pre-1990 Reflachromat reflecting objectives have a cone-shaped baffle at the bottom of the optic to allow for clearance of the compression cell. This baffle must be removed when using the compression cell. This is accomplished by loosening the three screws in the bottom plate; a 0.035-inch hexagonal head (with a red handle) is included in the tool kit for this purpose.

6. Acquire a sample single-beam spectrum.

   a. Place the Micro Compression Cell in the microscope.

   b. Focus a and aperture down on the sample.

   c. Acquire a sample spectrum.

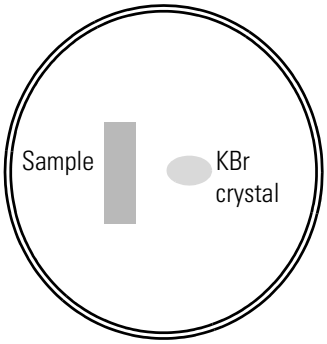

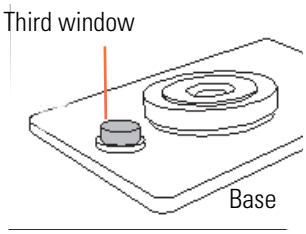

7. Acquire a background spectrum (KBr Crystal method.

If the KBr Crystal method was chosen (see "Appendix C" on page 13 for information on Background Spectral Collection Methods) run the background spectrum on the KBr crystal (with the same aperture size used for the sample). Ratio against the previously acquired sample spectrum.

8. Acquire a background spectrum (Method 2: Third Window Method).

   If the Third Window method was chosen (see "Appendix C" on page 13 for information on Background Spectral Collection Methods) place a third window (one that is made of the same material used in the cell and is equal to the total thickness of the first two windows) in the circular detent to the side of the screw cap (e.g., if you are using two 1 mm BaF_2 windows in the cell, use a single 2 mm BaF_2 window to obtain the background spectrum).

   Move over to this window without changing the aperture size and collect the background spectrum.

   Ratio against the previously acquired sample spectrum.

Micro Compression Cell With Diamond Windows

❖ To use the Micro Compression Cell with Diamond windows

Note Use these instructions with the Micro Compression Diamond Cell (0045-434) with Diamond windows in 13 mm mounts. See Micro Compression Cell With Standard 13 mm Windows when using standard 13 mm windows.

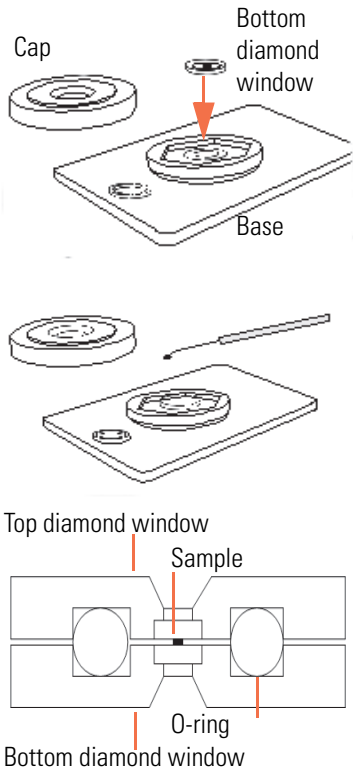

1. Unscrew the top cap from the base of the Micro Compression Cell.
2. Insert one window.
   a. Place one diamond window in the circular opening in the center of the base cell.
   b. Place the o-ring into the groove of the bottom diamond window.

   NOTE You must place the o-ring in between the diamond cell windows or the warranty will be void.
3. Sandwich the sample.
   a. Use a probe to place the sample in the center of the bottom diamond window.

   NOTICE The quantity of sample used is critical for proper flattening or crushing. Too much sample will produce a sample too thick for transmission analysis. For soft or elastomer samples, 15 µm to 30 µm particles are ideal.
4. Determine which method will be used to collect a background spectrum (see "Appendix C" on page 13 for information on Background Spectral Collection Methods).

   If the **KBr Crystal method** is chosen, place a single crystal of powdered KBr on the diamond window next to, but not touching, the sample.

   Place the top diamond window directly on top of the sample. Be certain that the two holes in the top window line up with the two holes in the bottom window.

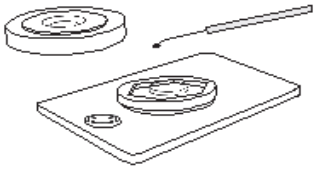

5. Replace the cap.

   Screw the cap down carefully just until the screw threads catch.

   a. While observing the sample, (a stereo microscope is recommended) tighten the cap until the sample and KBr crystal (if used) contact the windows. It is useful to watch the sample and KBr as they are being flattened.

   NOTICE Hand-tighten only. Do not use tools to tighten the cap on the base of the cell.

   If the **Single Window method** is being used to collect the sample and background spectra, remove the cap. Gently remove the top window. The sample should adhere to one window. Place that window into the base with the sample facing up.

6. Set compensation settings.

   The Continuum microscope comes equipped with a means to compensate for the spherical aberrations due to the thickness of the compression cell windows. *Skip this step if you do not have a Continuum microscope.*

   See Step 5 to determine the proper settings for your system.

   If the **KBr method** is being used to collect the background spectrum, set the compensation settings on both the objective and condenser for 1 mm.

   If the **Single Window method** is being used to collect the background spectrum, set the compensation settings on the objective for 0 mm and condenser for 1 mm.

7. Acquire a sample single-beam spectrum.

   a. Place the Micro Compression Cell in the microscope.

   b. Focus and aperture down on the sample.

   c. Acquire sample spectrum.

8. Acquire a background spectrum (KBr Crystal method).

   If the **KBr Crystal** method was chosen (see "Appendix C" on page 13) run the background spectrum on the KBr crystal (with the same aperture size used for the sample).

   Ratio against the previously acquired sample spectrum.

9. Acquire a background spectrum (Single Diamond Window method).

   If the **Single Diamond Window** method was chosen (see "Appendix C" on page 13) run the background spectrum on a clear area of the window next to the sample (with the same aperture size used for the sample).

Cleaning Methods for Diamond Windows

The diamond windows in 13 mm mounts have been designed expressly for use with FT-IR microscopes and permit samples to be compressed to a point where they may be analyzed in transmission. To prolong the life of your diamond window assemblies, the cleaning suggestions listed below may be useful in your laboratory.

Method 1. Clean the surface using a cotton swab, wooden spatula or lint-free tissue.

Method 2. If the sample material cannot be removed using Method 1, distilled water should be used.

Method 3. If Methods 1 and 2 fail, the use of organic solvents might be necessary. Only Organic solvents should be used sparingly! The excess solvent should be immediately wiped away with a lint-free tissue and the diamond window should be dried.

CAUTION Do not use chlorinated solvents.

Appendix A

Contents

Spherical Correction

The following tables are designed as quick reference guides to determine the approximate separation change required to correct for spherical aberrations when using standard IR materials to mount or cover samples. These are approximate figures which do not account for variations in refractive index due to wavelength.

For objectives without compensation, skip this step.

❖ **To use the Spherical Correction Tables:**

1. Determine which lenses (objective, condenser or both) require correction by observing the following guidelines:
   a. **Sample on top of a window:** Adjust condenser counterclockwise.
   b. **Sample between two windows or embedded in a material:** Adjust condenser counterclockwise and objective clockwise.
   c. **Sample under a window:** Adjust objective clockwise.
2. Determine the thickness of the window material between the objective (condenser) and the sample.

   Locate this value in the left-hand column of the appropriate table(s).
3. Locate the appropriate correction for the window material you are using.
4. Rotate the objective and/or condenser compensation ring the suggested number of divisions in the direction specified above (see step 1).
5. Refocus the microscope.

   Make additional fine corrections as required.

Correction Tables for Pre-1991 Reflachromat Objectives

Table 1. 15X Reflachromat Objective (values represent approximate of divisions of markings)

Thickness	BaF2	NaCL	KBr	ZnSe	KRS-5
0.5 mm	3.7	3.8	3.9	3.6	3.6
1.0 mm	7.4	7.7	7.8	7.2	7.2
1.5 mm	11.1	11.5	11.6	10.7	10.8
2.0 mm	14.8	15.3	15.5	14.7	14.4
2.5 mm	18.4	19.2	19.4	17.9	18.0
3.0 mm	22.1	23.0	23.3	21.5	21.6
3.5 mm	25.8	26.8	27.1	25.0	25.2
4.0 mm	29.5	30.6	31.0	28.6	28.8

Table 2. 32X Reflachromat Objective

Thickness	BaF2	NaCL	KBr	ZnSe	KRS-5
0.5 mm	7.9	7.3	7.4	6.8	8.3
1.0 mm	14.1	14.6	14.8	13.6	13.7
1.5 mm	21.2	21.9	22.2	20.4	20.6
2.0 mm	28.3	29.2	29.6	27.2	27.4
2.5 mm	35.3	36.5	37.0	34.0	34.3
3.0 mm	42.4	43.8	44.6	40.8	41.1
3.5 mm	49.5	51.0	51.8	47.7	48.0
4.0 mm	56.5	58.3	59.2	54.5	54.9

Table 3. 10X Reflachromat Condenser

Thickness	BaF2	NaCL	KBr	ZnSe	KRS-5
0.5 mm	7.4	7.7	7.8	7.2	7.2
1.0 mm	14.7	15.3	15.5	14.3	14.4
1.5 mm	22.1	23.0	23.3	21.5	21.6
2.0 mm	29.5	30.6	31.0	28.6	28.8
2.5 mm	36.9	38.3	38.8	35.8	36.0
3.0 mm	44.2	46.0	46.5	42.9	43.2
3.5 mm	51.6	53.6	54.3	50.1	50.4
4.0 mm	59.0	61.3	62.0	57.2	57.6

Appendix B

Contents

Pre-1991 15X Objective and 10X Condenser Diagrams

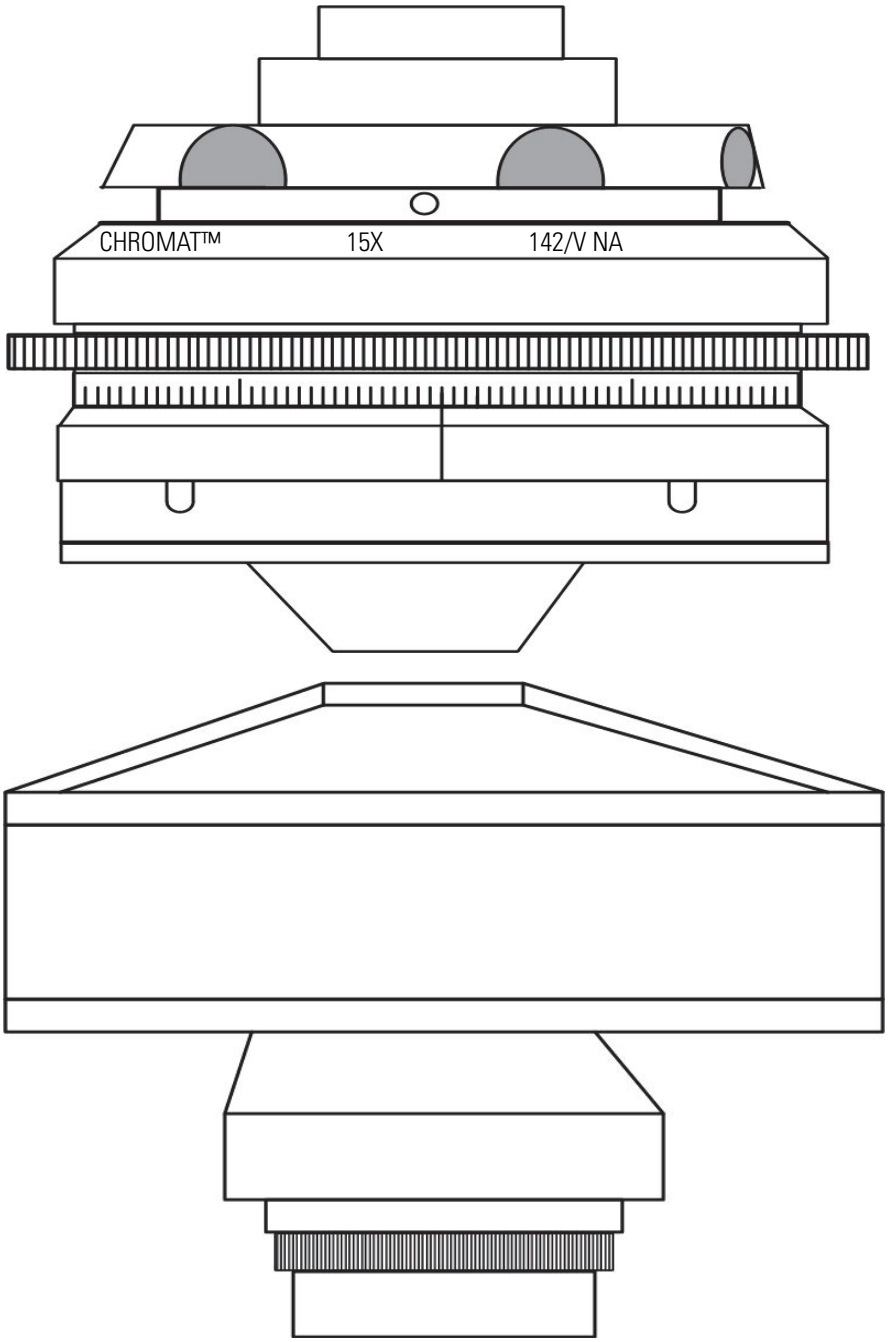

Post-1991 15X Objective and 10X Condenser Diagrams

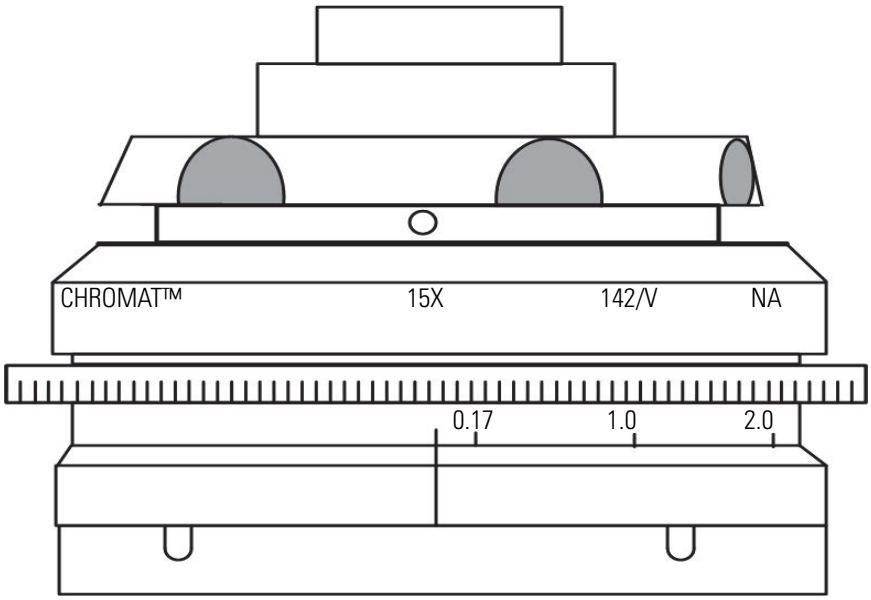

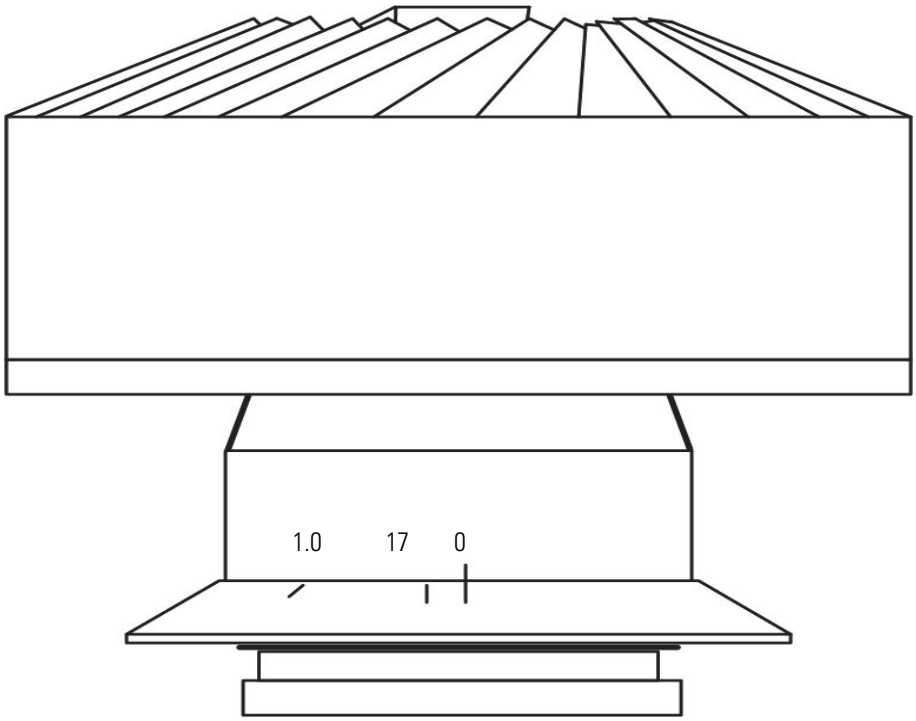

Appendix C

Contents

Background Spectral Collection Methods

Micro Compression Cells with Standard 13 mm IR Windows

When using the Micro Compression Cell or Micro Compression Diamond Cell with standard 13 mm IR windows, there are two methods for acquiring a background spectrum: The KBr Crystal method and the Third Window method.

Method 1: The KBr Crystal Method

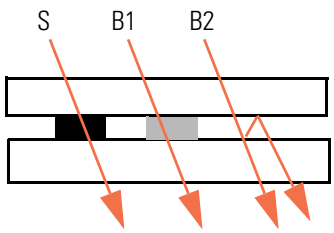

This method requires the user to place a single powdered KBr crystal on the window next to but not touching the sample.

- This can eliminate interference fringing by reducing the probability of internal reflection within the sample.
- The probability of internal reflection is reduced because the refractive index of the infrared window is closer to the sample's refractive index than is air.
- It is necessary to scan the background through the single KBr crystal (B1) because the sample prevents the two windows from contacting each other.
- Collecting a background in an area adjacent to the sample (B2) would result in an interference fringe (which is generated in the background rather than the sample) because of the air gap between the two windows.

Method 2: Third Window Method

This method allows the user to assemble the cell containing only the sample. A single window equal to the thickness of both windows used in the cell, and of the same IR material, is placed in a detent near the screw cap.

For example, if 1 mm BaF_2 windows are in the cell, a 2 mm BaF_2 window will be used to collect the background spectrum.

Micro Compression Cell with Diamond Windows

When using the Micro Compression Diamond Cell with diamond windows, there are two methods for acquiring a background spectrum and the sample spectrum: The KBr Crystal method and the Single Diamond Window method.

Method 1: KBr Crystal Method

See "Method 1: The KBr Crystal Method" on page 13.

Method 2: Single Diamond Window Method

This method is useful for crushing samples without a memory. This method may not be useful for elastomers, polymers and rubbers due to the sample memory property. With this method, the sample is compressed between the two diamond windows, the cell is opened, the diamond windows are separated, and the window to which the sample adheres is placed back in the holder. The sample spectrum is taken and the background spectrum is then taken on a clear area of the window next to the sample.