Thermo
SCIENTIFIC

Laboratory Freezers

Freezer Models
274F/274FA

LT1562X1 • 6/3/09

Table of Contents

Safety Information

Alert Signals

Warning
Warnings alert you to a possibility of personal injury.

Caution
Cautions alert you to a possibility of damage to the equipment.

Note
Notes alert you to pertinent facts and conditions.

Hot Surface
Hot surfaces alert you to a possibility of personal injury if you come in contact with a surface during use or for a period of time after use.

Warning
As a routine laboratory precaution, always wear safety glasses when working with this apparatus.

DANGER: RISK OF CHILD ENTRAPMENT. BEFORE YOU THROW AWAY YOUR OLD REFRIGERATOR OR FREEZER:

- TAKE OFF DOORS
- LEAVE THE SHELVES IN THE PLACE SO THAT CHILDREN MAY NOT EASILY CLIMB INSIDE.

Your satisfaction and safety are important to us and a complete understanding of this unit is necessary to attain these objectives.

As the ultimate user of this apparatus, it is your responsibility to understand its proper function and operational characteristics. This instruction manual should be thoroughly read and all operators given adequate training before attempting to place this unit in service. Awareness of the stated cautions and warnings, and compliance with recommended operating parameters – together with maintenance requirements – are important for safe and satisfactory operation. The unit should be used for its intended application; alterations or modifications will void the Warranty.

This product is not intended, nor can it be used, as a sterile or patient connected device. In addition, this apparatus is not designed for use in Class I, II or III locations as defined by the National Electrical Code, unless otherwise noted.
Warranty.

Warning

- This manual must be carefully read and thoroughly understood before operating the unit, failure to follow directions or precautionary measures could result in serious adverse effects.
- This equipment must be used only as specified in these instructions. If used in a manner other than as specified, the protection provided by the equipment may be impaired.
- This equipment is intended for indoor use only.
- This equipment must be earth grounded for safe operation.
- Disconnect unit line cord from power source before performing any servicing or maintenance.

Unpacking

Save all packing material if apparatus is received damaged. This merchandise was carefully packed and thoroughly inspected before leaving our factory.

Responsibility for its safe delivery was assumed by the carrier upon acceptance of the shipment; therefore, claims for loss or damage sustained in transit must be made upon the carrier by the recipient as follows:

Visible Loss or Damage

Note any external evidence of loss or damage on the freight bill, or express receipt, and have it signed by the carrier's agent. Failure to adequately describe such external evidence of loss or damage may result in the carrier's refusing to honor your damage claim. The form required to file such a claim will be supplied by the carrier.

Concealed Loss or Damage

Concealed loss or damage refers to loss or damage, which does not become apparent until the merchandise has been unpacked and inspected. Should either occur, make a written request for the carrier's agent within 15 days of the delivery date; then file a claim with the carrier since the damage is the carrier's responsibility.

If you follow the above instructions carefully, we will guarantee our full support of your claim to be compensated for loss from concealed damage.

DO NOT – FOR ANY REASON – RETURN THIS UNIT WITHOUT FIRST OBTAINING AUTHORIZATION

Packing List

The following items are packed in the envelope located inside the freezer chamber. If any of the following items are not present, report the missing item to your local representative.

1. This Instruction Manual
2. Door Lock Key
3. Key Switch Key
4. Charts

Performance Characteristics

Temperature Ranges

-30°C to 0°C (-22° to 32°F)

Temperature Stability

±4°C

Electrical Requirements

Model Number	Volts (±10%)	Amps	Hz
274F or 274FA	230	16.0	60

Installation

Selecting a Location

Choose a location for the freezer that will provide at least three inches of clearance between the cabinet and any adjacent vertical surface at the sides and the rear. Appropriate electrical power must be available. Locate the freezer within six feet of the power outlet so that no extension cord is required.

Casters

Each freezer is shipped with four casters, which are packaged separately and fastened inside the cabinet. Threaded legs are available as an option for Laboratory Freezers. Legs and casters screw directly into the weld nut provided in each corner of the base.

Note
The freezer must be level in order to provide adequate condensation drainage as well as proper door alignment and operation. The freezer should be in its final operating location and set so that it is firmly positioned on the floor.

Leveling the Unit

The freezers come with four casters, which thread into the base of the unit, one in each corner. Use the wrench provided to thread the casters completely into the base of the unit. Back the casters in or out until the unit is level and resting on all four casters. See Figure 1.

Level the cabinet front to rear and side to side using the leg inserts.

Warning
If the unit is tilted in excess of 30 degrees, do not apply electrical power for a minimum of 12 hours.

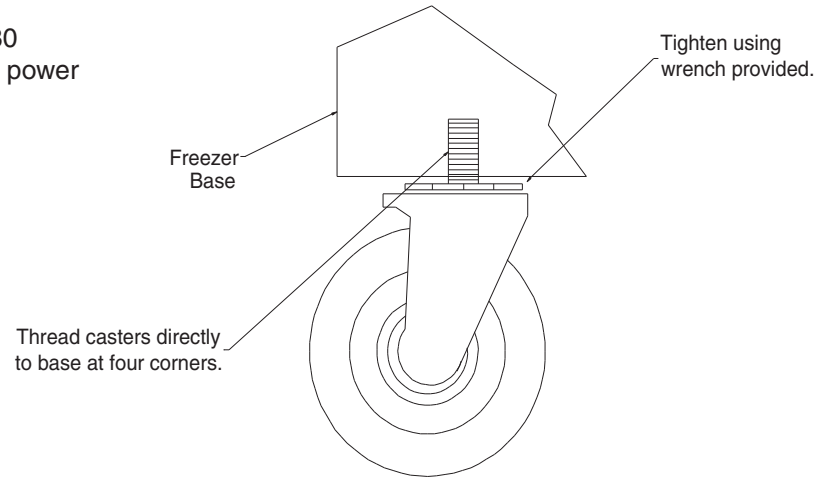

Figure 1

Shelves

Included are three (3) epoxy coated wire shelves per door opening. Also included are three epoxy coated filler shelves for the two and three door models. Shelf spacing is adjustable on half-inch centers with the enclosed shelf supports to suit requirements. Replacement shelves are available individually. Contact Customer Service for replacement part numbers.

Shelf Installation

For each shelf, insert four shelf supports at equal heights onto the pilasters as shown in Figure 2 on the following page. Shelf supports (2) with 1/2" long tabs are placed in the two rear pilasters while the 1/4" shelf supports are placed on the two front pilasters. Place shelf on top of the shelf supports as shown on Figure 3.

Caution
Remove the banding around the compressor before operation. Verify the drain tube is not on top of the of the compressor foot.

Compressor Mounts

The compressor is secured with steel banding to prevent damage during shipping. Before operating the compressor, remove the banding. Removing the banding will allow free movement of the compressor while the freezer is running. After cutting the banding, verify the drain tube is not on top of the compressor foot.

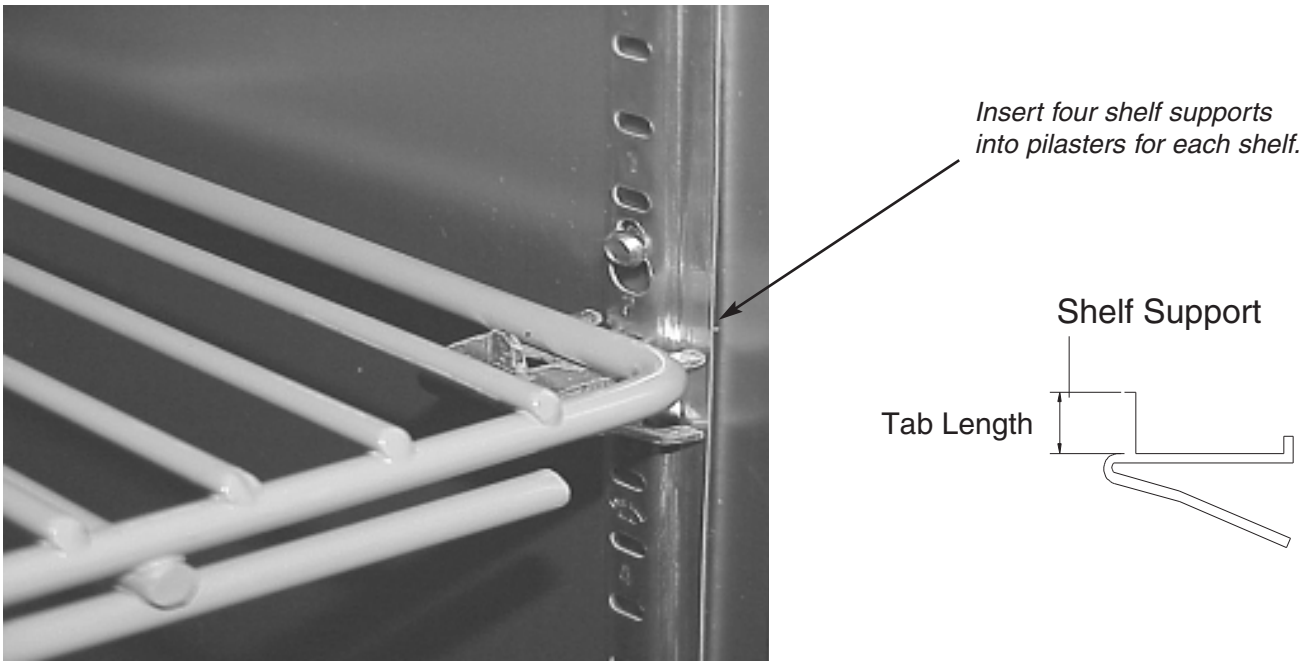

Figure 2

Figure 3

Caution
Insufficient line voltage is often the cause of compressor start-up failure, especially in 115V freezers. It is strongly recommended that a dedicated 20A circuit, conforming to the National Electrical Code, be used for powering the freezer.

Caution
Be sure that the power supply is the same voltage that is specified on the freezer's data plate.

Warning
For personal safety this unit must be properly grounded.

Warning
DO NOT under any circumstances cut or remove the third (ground) prong from the power cord. DO NOT use a two-prong adapter plug.

Where a two-prong wall receptacle is encountered, it is the personal responsibility and obligation of the user to have it replaced with a properly grounded three-prong receptacle.

Caution
Do not use an extension cord. Use of an ungrounded cord or an overloaded circuit VOIDS the compressor warranty.

Electrical Connection

The frequency and nominal voltage requirements for the unit are specified on the data plate, which is located on the interiors upper left side. Plug the unit into a power source that meets these requirements. Low line voltage is often the cause of service complaints. With the unit running, check that the line voltage is within ±5% of that specified on the data plate.

The power cord of the single door model is equipped with a **NEMA 5-20P** three-prong (grounding) plug which must mate with a standard **NEMA 5-20R** three-prong (grounding) wall receptacle. The customer should have the wall receptacle and circuit checked by a qualified electrician to verify the receptacle is properly grounded and is connected to 20 amp service minimum.

The power cord for the two and three-door models is equipped with a NEMA L14-20P four prong (grounding) plug which must mate with a standard NEMA L14-20R four-prong (grounding) receptacle. The customer should have the wall receptacle and circuit breaker checked by a qualified electrician to verify the receptacle is properly grounded and connected to a 20 amp service minimum.

During compressor start-up, the unit will momentarily draw more current than under normal running conditions. To avoid nuisance tripping of circuit breakers, it may be necessary to install an HACR rated breaker.

Operation

Warning
This product is NOT approved for storage of flammable or explosive materials. Also, it is NOT approved for use in hazardous locations containing explosive atmospheres.

Begin operation by inserting the key into the key switch located on the header panel. The key switch is packed inside the envelope, which is shipped in the freezer chamber. Turning the key switch to the ON (|) position will energize the compressor and condenser fans and the digital controller. All models delay the evaporator fans from starting until the evaporator temperature has pulled down to 25°F. When the evaporator fans begin running, a switch behind each door will stop the fans while the door is opened. This is to minimize loss of cold air while the door(s) are open.

Control Layout

Before operation, become familiar with the freezer controls located on the header panel. A layout of the controls is given below:

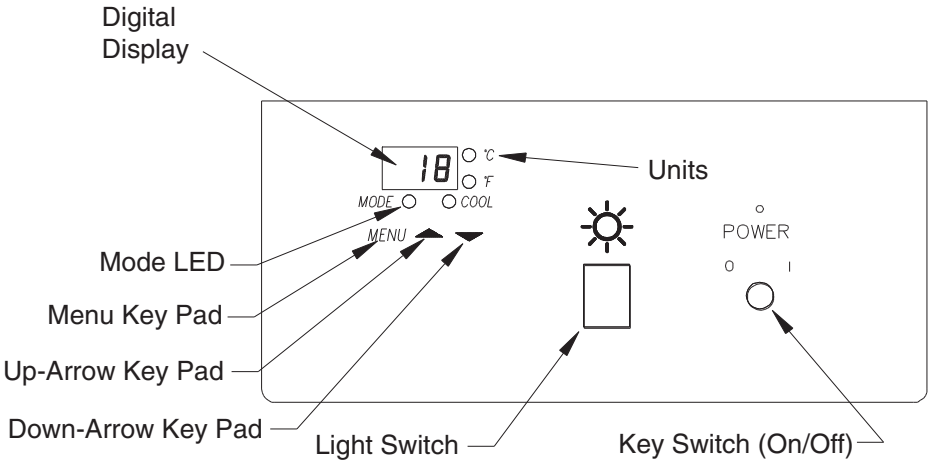

Note
The compressor requires a time delay between activations. The unit will not cool during this delay. This delay time will also be in affect immediately after power-up.

Temperature Controller

The digital temperature controller is located on the center of the header panel (See Figure 4). When the unit is initially turned on, the display will indicate current chamber temperature. The temperature units will be indicated by the °C or °F LED located just to the right of the temperature display. The freezer is factory set to -15°C. A time delay is programmed into the controller to provide sufficient time for the system pressure to equalize. When the delay time is over, the Cool LED will illuminate, the compressor will run and the chamber will cool.

Setting the Temperature

To change the set temperature, press and release the Menu keypad once. The display will flash SP and the Mode LED will be illuminated. The last set temperature will then be shown in the display. To change the temperature, press the UP or DOWN arrow key. The adjustable temperature range is 0 to -30°C (32 to -22°F). When the desired set temperature is displayed, press the Menu keypad to enter the set temperature and activate the *Units Select* menu.

Units Select

The second menu selects the units. The freezer control displays temperature in °C or °F. The factory setting is °C. Starting from the temperature display mode (Mode LED off), press the *Menu* key twice. The current temperature units are displayed. To switch between units, press the UP or DOWN arrow key to change to the desired units, then press the *Menu* key to select. The desired unit LED will be displayed on the right of the temperature display.

Calibration Offset

In the event the freezer needs calibrated, a simple routine is available to adjust the display and control point to a reference standard. To set the temperature offset, press and hold the *Menu* keypad for 5 seconds. The display will flash oS (offset) followed by the last temperature offset value. The factory setting is 0. To change the offset value, press the UP or DOWN arrow key, then press the *Menu* key. The value shown in the display will be added to the previous temperature reading. The maximum offset value is ±5°C (±9°F).

For Example:
The freezer has been operating at -15°C for 30 minutes. The display indicates -15°C but a reference thermometer in the chamber indicates -17°C. The operator presses and holds the *Menu* keypad for 5 seconds and changes the offset value from 0 to -2. The *Menu* key is pressed until the *Mode* LED goes out. Now the display indicates a

chamber temperature of -17°C and the system begins to control to the desired temperature of -15°C.

Allow an additional 30 to 40 minutes for the freezer to again stabilize. If the display is still inaccurate, repeat the calibration offset procedure.

Note
While in any of the controller mode setups (temp set, units or calibration offset), the controller will wait 15 seconds for a value to be entered. If there is no keypad operation within the 15-second time window, control will automatically revert to the temperature display mode and the *Mode* LED will turn off.

Hold-Off Time

Following the offset menu is the hold-off (Ho) menu. The display will momentarily flash “Ho”, followed by a number. The number shown is the delay time in minutes between compressor activations. Use the UP/DOWN keypads to change the value.

Increasing the hold-off time will allow additional time for the evaporator to defrost during the off-cycle. This can reduce the chance of evaporator freeze-up during times of high humidity. Pressing the Menu keypad while in the Ho mode, enters the hold-off time displayed, and returns controller operation to the temperature display mode.

Error Codes

Error codes indicate when the controller is sensing a problem. A description of each is given below. See the Troubleshooting Table for additional information on error codes.

E1	Open sensor.
E2	Under temperature. Temperature at sensor is less than -36°C.
E3	Over temperature. Temperature at sensor is greater than 37°C.

Interior Lights

Each cabinet has interior light(s) activated by a door switch(s). The lights are automatically turned on or off by opening or closing the door(s). Replace with 40 watt refrigerator grade bulb.

Caution
Changes to the defrost cycle are not recommended and void the warranty.

Note
The freezer will not cool while in the defrost mode, even if the *Cool* LED is illuminated.

Defrost System

The defrost heaters are controlled by a defrost timer. The timer is a 24 hr. dial timer located in a galvanized box behind the header panel. The timer is factory set to provide four defrost cycles per 24 hour period. The defrost heaters are deactivated by a thermal switch or by the defrost timer time limit.

Chart Recorder Operation and Maintenance

Caution
It is important that these instructions be read before operating the instrument. Keep these instructions on file for future reference.

Note
Units are factory equipped with a 9VDC Alkaline battery, however, the battery is not connected electrically. Please refer to battery location and replacement instructions for information on locating and connecting the battery upon unit installation.

Warning
The chart recorder battery backup feature does not supply the refrigeration system with required power for continuous operation. Precautions should be taken to prevent any sample loss.

The recorder is installed to provide air temperature readings inside the unit. The recorder will swing up and down with the unit's air temperature. The customer is responsible for evaluating the normal swings of the unit for suitability for samples stored in the unit. The average temperature in the unit is in the middle of the band for the temperature swings, freezers with automatic defrost will have a spike during the defrost cycle. The sample mass will determine the actual swing of the sample. (Small samples will swing more than large samples.)

Chart Recorder Power Supply

The recorder functions from AC power when the unit is operating normally. The recorder is also equipped with a backup battery, installed in the bracket just inside the door of the recorder. In the event of an AC power interruption the battery backup will allow the recorder to continue to operate. The green LED will begin "flashing" to indicate that there is an interruption in the main power supply. In normal operating mode, the green LED is illuminated continuously. (See Figure 7.)

Changing the Chart Paper

Press and hold the "chart change" button (#3) for approximately one second until the pen begins to move to the left of the chart and then release the button. Wait until the pen has moved completely off of the chart. To remove the chart paper, unscrew (counter-clockwise) the chart "hub" knob at the center of the chart. Remove the old chart paper and position the new one so that the correct time line coincides with the time line groove on the chart plate. Refer to Figure 7 for the location of the time line groove. Re-attach the chart "hub" knob and screw securely (by hand) against the chart. Press and hold the "chart change" button (#3) again for approximately one second until the pen begins to move back onto the chart and then release the button. Check to make sure that the pen is marking on the chart paper. If it is not, then carefully adjust the pen arm to establish contact with the paper.

Marking Systems: Mark-A-Matic II Inking System

This type of pen consists of a self-contained ink reservoir with a porous plastic stylus, which is snapped around the outer edge of the metal pen arm.

A pen cap is provided to extend the life of the ink pen during shipping or when the recording unit is not in service. To remove the pen cap, gently lift the pen arm away from the chart paper. Remove the black plastic pen cap to expose the fiber tip of the ink pen and gently place the pen back onto the chart paper. Do not let the pen arm "snap" back onto the chart paper. This will flatten the fiber tip of the pen and will no longer give you a fine line marking on the chart paper. Place the pen cap in a safe place for future use.

If the stylus does not touch the chart, adjustment can be made by slightly bending the metal pen arm in the center towards the chart paper. Do not use more pressure than is necessary to create a fine line marking on the chart paper.

Note
As the pen ink supply runs out, the pen color will become lighter. This indicates that the pen should be replaced.

Replacement of Pen

Recorders Equipped with Fiber Tipped Cartridge

The pen cartridge is securely fastened to the metal pen arm using a special "U" clip tab.For ease of replacement, it is suggested that the two screws that hold the pen arm be loosened and the pen cartridge and metal pen arm to be removed as an assembly. Refer to Figure 7 for the location of the pen arm screws. Unsnap the plastic "U" clip tab of the pen cartridge from the metal pen arm, remove and discard the old pen cartridge. Replace the new cartridge by opening the hinge and snapping it securely around the metal pen arm. Refer to Figure 5.

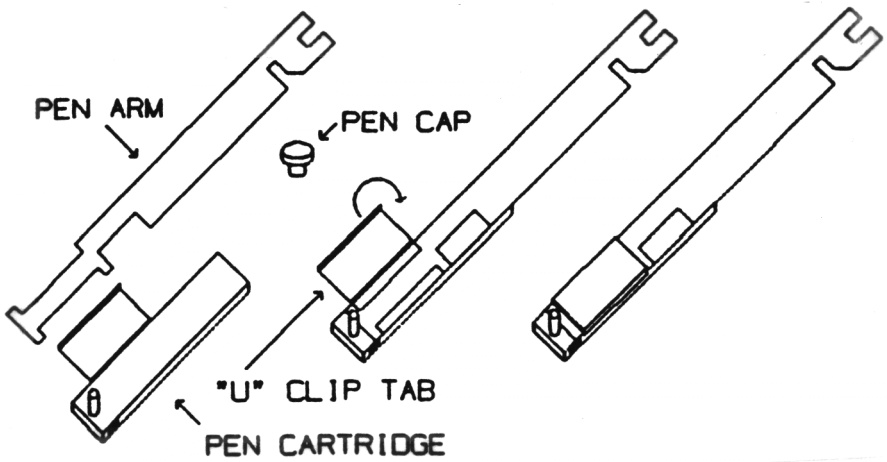

Figure 5: Pen Arm Assembly

Pen Arm Calibration

When the unit is first powered on, the pen arm(s) will move off of the chart and then move back onto the chart briefly stopping at the outer most temperature graduation ring of the chart paper. If the pen does not stop exactly at this location on the chart, it can be adjusted or "calibrated" by using the left (#1) or right (#2) arrow buttons (refer to Figure 6). When the pen moves back onto the chart and briefly stops, you will have approximately five seconds in which to adjust the pen's position using the left and right arrow buttons of Figure 6.

To check and/or adjust the pen's alignment to the outer most temperature graduation ring, press and hold the chart change (#3) button until the pen begins to move off of the chart. Once the pen(s) has moved off of the chart, again press and hold the chart change (#3) button until the pen begins to move back onto the chart. The pen will briefly stop at the outer most temperature graduation ring before continuing onto the chart to begin recording.

Each time the chart paper or fiber tip pen cartridge is changed, you should make sure that the pen stops at the outer most temperature graduation ring of the chart paper. Otherwise, this pen offset will cause the unit to record an incorrect temperature on the chart.

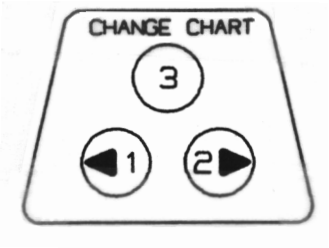

Figure 6: Push Buttons

Temperature Recorder Calibration Check

This recorder has been accurately calibrated at the factory. Before making any adjustments, this instrument should be in service for 24 hours. Thereafter, if any adjustment is required, perform the following procedure:

1. Place a Certified Test Thermometer(s) in a solution bottle(s) alongside the recorder's sensor probe(s).

2. Once the temperature has leveled out, compare the position of the pen on the recorder to the test thermometer's reading.

3. If an adjustment is required, use the left (#1) and right (#2) arrow pushbuttons on the recorder to calibrate (or move) the pen's position on the chart to correspond to the temperature of the solution. The arrow buttons must be held for approximately five seconds before the pen will begin to move.

Chart Rotation Speed

To change the chart rotation speed, first unplug the unit from the main power supply and disconnect the battery (if the recorder has the optional battery back-up feature). Next, press and hold the "chart change" button (#3) and re-connect the recorder to the main power supply. Once power to the recorder has been established, release the "change chart" button (#3). NOTE: The pen(s) will not be moving if this step is successfully completed. The LED will begin flashing in sequence to show the current chart rotation speed that is configured for the recorder:

Flash 1 time – 24 Hour
Flash 2 times – 7 Day

To change the chart rotation speed (of the current range only), press and release the left button (#1) to select 24 hour rotation and press and release the right button (#2) to select 7 day rotation.

The LED will flash the appropriate number of times to show the chart rotation speed that is selected. To permanently save the chart rotation speed that has been selected, press and release the “chart change” button (#3) and the recorder will resume normal operation.

Battery Back-Up

The LED remains a constant green color indicating that both the battery and the main power to the unit are good. Refer to Figure 7 for the location of the LED. If the AC power were to fail or the battery becomes weak, then the LED will begin “flashing” indicating that either you have lost the main power to the unit or it is time to replace the battery. Having a 9 volt DC battery back-up in place will allow the recorder to continue to function normally for approximately 24 hours in the event of a power failure. (Alarming units will drain battery much quicker).

Warning
The chart recorder battery backup feature does not supply the refrigeration system with required power for continuous operation. Precautions should be taken to prevent any sample loss.

Battery Location and Replacement

To replace the battery, first open the recorder case door. The battery will be located in the upper right hand corner of the unit. Remove the battery from the holder clips. Disconnect the battery strap. Install a NEW 9 volt alkaline replacement battery.

Optional Alarm/Control Relay

(For all models equipped with panel mounted chart recorder **with alarm feature**)

Warning
DO NOT ATTEMPT to make relay connections while the unit is connected to the main AC power supply. To avoid the risk of possible electric shock, unplug or disconnect the unit from the main power supply before attempting to access the alarm cable assembly. Disconnect the 9 Volt battery to avoid damaging the recorder and draining the battery.

Connection to the Relay

Recorders with the optional alarm relays provide two outputs. First a built in audible 85 db alarm. Second a cable to connect to a set of NO/NC relay contacts for connecting to a central system. Proper maintenance/electrician should be consulted to connect these contacts.

The toggle switch mounted on the chart plate turns the alarm on or off. Toggle the switch up to turn alarms on. Toggle the switch down to turn the alarms off.

The relays that are used in this recording unit are latching type relays. That is the contacts of the relay will remain either closed or open (even when there is no power applied to the recorder) until the relay is pulsed with a signal from the recorder to change the position of the contacts.

Alarm contacts are available through a 3-conductor cable on the back of the recorder. Due to the many models the recorder is installed, the details of removing the panel is not included here. A visual inspection should define several screws to remove first. Models which the screws are removed and the panel does not come loose, carefully push up about 1/2" and release keyhole type screws. The black wire is the common. The red wire is the normally open side of the relay contact. The white wire is the normally closed side of the relay contact.

Note
The cable runs to J2 on the recorder PCB Wires are connected top to bottom as White(NC), Black (COM), and Red (NO).

The relays are rated for the following maximum values:

2.0 AMP at 30 V DC
0.6 AMP at 30V AC

Caution
Damage to the recording unit may result if the ratings for the relays are exceeded.

Setting the Alarms

To set the alarms, follow these instructions:

Press and hold the "chart change" button (#3) until the pen arm begins to move off of the chart and then release the button. Wait until the pen has moved completely off of the chart. When the "chart change" button (#3) is pressed again, the pen will begin to move back onto the chart briefly stopping at the edge of the chart. (Verify the pen is on the edge of the chart.)

The pen arm will then move to the first control point position and the green LED will turn off. The pen will remain at this position for a period of approximately five seconds during which time high-alarm point can be adjusted using the left arrow (#1) or the right arrow (#2) push buttons. Refer to Figure 6 for a diagram of the pushbuttons. When the time has expired for adjusting the high alarm point, the green LED will turn back on and move to the low alarm point. The pen will remain at this position for a period of approximately five seconds during which time the low alarm point can be adjusted using the left arrow (#1) or the right arrow (#2) push buttons. The LED will turn solid green and the pen arm will move to indicate the probe's temperature and the unit will begin recording.

Note
The recorder alarms will activate when the recorder temperature is outside the high and low alarm points explained above. Do not activate the alarm until the temperature inside the equipment is between the adjustable limits.

Chart Range Selection

If the recorder has a range sticker (that lists several temperature ranges) mounted on the front of the chart plate, under the chart, then the following section will apply to you.

This recording unit has the option for the user to select from several temperature ranges that are programmed into the recorder. NOTE: The chart paper that is used on the recording unit must match the *range* that is selected for the recorder. Otherwise, the pens position on the chart paper will not correspond to the temperature that is measured.

Also, if the pen moves to the center of the outer edge of the chart and remains there while the unit is powered on, then this may be an indication that the current range selected for the unit is incorrect. The recorder has a built in safety mechanism that will always move the pen to the highest temperature on the chart when the current temperature that is measured is not within the selected range.

To select from the ranges available, press and hold the "change chart" button (#3) while in normal operating mode, until the pen arm begins to move off the chart. Once the pen has moved off the chart, press and hold the left arrow (#1) or right arrow (#2) button for approximately five (5) seconds and then release the button. Refer to Figure 6.

The green LED light will begin flashing one time if range #1 is selected or will flash two times if range #2 is selected and so on. Press the left arrow key (#1) to increase the range number or press the right arrow button (#2) to decrease the range number that is selected for the recorder. When finished selecting the range, press and hold the "chart change" button (#3) until pen begins to move back onto the chart and the selected range will be saved into the recorder's permanent memory.

Recorder Specifications

Input

Nominal Input Voltage: Single Phase 115/230VAC.
Nominal Input Current: 0.40mA/0.20mA
Nominal Input Frequency: 50-60 Hz.

Battery

Battery Type: 9 Volt Alkaline
Low Battery Signaling: Flashing LED

Replacement Parts

-40 to 60°C	Charts	SPN104116
-5 to 25°C	Charts	SPN107434
-45 to 0°C	Charts	SPN107435
Replacement Pens		SPN104117

Operating Environment

0°C-40°C (32°F-104°F); 0-95% RH, Non-condensing

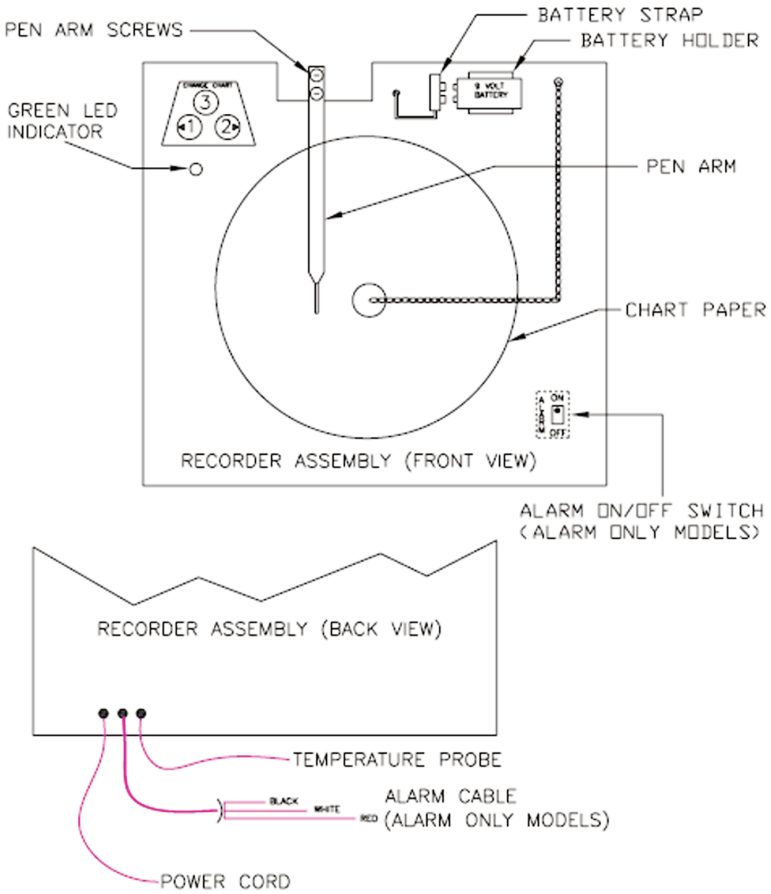

Figure 7: Recorder Assembly

Troubleshooting

This table is intended to assist in resolving user-correctable freezer problems by relating symptoms to their likely causes. If service beyond the scope of this table is required, contact service at 1-800-553-0039.

Symptom	Probable Cause	Action
Does Not Run	Unit unplugged.	Plug in unit.
	Blown fuse or tripped circuit breaker.	Check fuse or circuit breaker at breaker box.
Runs continuously, does not cool.	Frost buildup on refrigeration coils.	Defrost unit, try again.
Clicking sound.	The compressor is equipped with a thermal protector. This device shuts off the compressor when it becomes too hot. A clicking sound occurring about every 30 seconds indicates this protector is working.	Disconnect power and call for service.
Insufficient cooling	Set temp is too high.	Reduce temperature setting. Verify *Cool* LED is on.
	Condenser coil dirty.	Clean condenser coil with a vacuum cleaner.
	Incorrect calibration offset.	Perform calibration. See *Calibration Offset.*
	Relay (K1) is not functioning.	Replace relay.

For future reference, when contacting service please have the following readily available:

Catalog Number:_____

Serial Number: _____

Date of Purchase: _____

The serial and catalog numbers can be found on the data plate, which is located inside the unit on the left side wall.

Maintenance

Warning
When servicing the unit, disconnect from the electrical power source.

Caution
Do not use any type of abrasive such as steel wool, or fluids such as gasoline, Naphtha, and thinner. These materials could be harmful to aluminum, plastic materials, door gasket, and painted surfaces.

Caution
Accessing and cleaning the condensate coil or pan should be done by qualified personnel.

Cabinet Cleaning

The exterior of the freezer cabinet should be cleaned with a solution of mild soap and water. Do not use caustic soap or abrasive cleaners since these may damage the cabinet finish. If stainless steel surface becomes discolored, scrub by rubbing only in the direction of the finished grain. The anodized aluminum interior and exterior should be cleaned with mild soap and water. Do not use steel wool.

The cabinet interior should be cleaned frequently. Any spilled liquid should be wiped off immediately since stains resulting from some spills could be permanent if not quickly removed.

A mild detergent and lukewarm water or a solution of Bicarbonate of Soda (1 tablespoon per gallon of water) is recommended for cleaning the interior or exterior of the cabinet. Surfaces should be rinsed and dried carefully and thoroughly.

Cleaning the Condenser

For efficient operation, it is recommended that the condenser coil and fan be cleaned every 4 to 6 months. The condenser coil is located behind the vented part of the header panel (left side). Remove the header panel for access. Vacuum clean the front surface of the coil thoroughly, or direct forced air through the condenser from the rear. If necessary, use a stiff bristled brush to loosen any dirt. Failure to clean the condenser will void the warranty.

Condensate Evaporator Pan

The condensate evaporator pan, located behind and below the condenser fan, must be cleaned periodically to prevent foul odors and to operate efficiently. Vacuum clean if dry or sponge clean with soap and water.

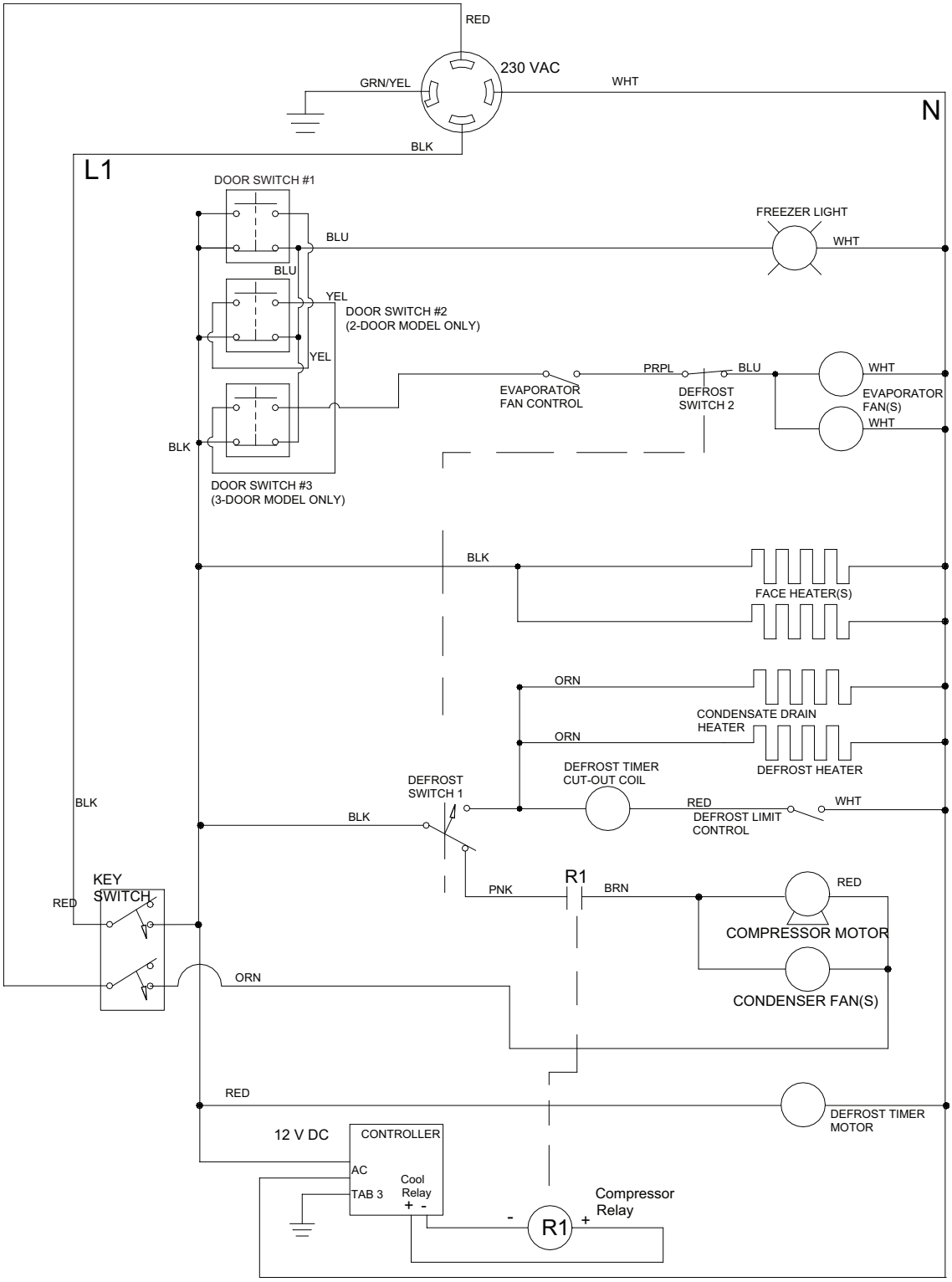
RED
230 VAC
GRN/YEL
WHT
N
BLK
L1
DOOR SWITCH #1
FREEZER LIGHT
BLU
WHT
BLU
YEL
DOOR SWITCH #2
(2-DOOR MODEL ONLY)
YEL
PRPL
BLU
WHT
EVAPORATOR
FAN CONTROL
DEFROST
SWITCH 2
EVAPORATOR
FAN(S)
WHT
BLK
DOOR SWITCH #3
(3-DOOR MODEL ONLY)
BLK
FACE HEATER(S)
ORN
CONDENSATE DRAIN
HEATER
ORN
DEFROST HEATER
DEFROST TIMER
CUT-OUT COIL
DEFROST
SWITCH 1
BLK
RED
WHT
BLK
DEFROST LIMIT
CONTROL
KEY
SWITCH
RED
PNK
R1
BRN
RED
COMPRESSOR MOTOR
ORN
CONDENSER FAN(S)
RED
DEFROST TIMER
MOTOR
12 V DC
CONTROLLER
AC
TAB 3
Cool
Relay
+ -
Compressor
Relay
-
R1
+

Three Year Limited Warranty

This Thermo Scientific product is warranted to be free of defects in materials and workmanship for three (3) year from the first to occur of (i) the date the product is sold by the manufacturer or (ii) the date the product is purchased by the original retail customer (the “Commencement Date”). Except as expressly stated above, the MANUFACTURER MAKES NO OTHER WARRANTY, EXPRESSED OR IMPLIED, WITH RESPECT TO THE PRODUCTS AND EXPRESSLY DISCLAIMS ANY AND ALL WARRANTIES, INCLUDING BUT NOT LIMITED TO, WARRANTIES OF DESIGN, MERCHANT ABILITY AND FITNESS FOR A PARTICULAR PURPOSE.

An authorized representative of the manufacturer must perform all warranty inspections. In the event of a defect covered by the warranty, we shall, as our sole obligation and exclusive remedy, provide free replacement parts to remedy the defective product. In addition, for products sold within the continental United States or Canada, the manufacturer shall provide free labor to repair the products with the replacement parts.

The warranty provided hereunder shall be null and void and without further force or effect if there is any (i) repair made to the product by a party other than the manufacturer or its duly authorized service representative, (ii) misuse (including use inconsistent with written operating instructions for the product), mishandling, contamination, overheating, modification or alteration of the product by any customer or third party or (iii) use of replacement parts that are obtained from a party who is not an authorized dealer of Thermo Scientific products.

Heating elements, because of their susceptibility to overheating and contamination, must be returned to the factory and if, upon inspection, it is concluded that failure is due to factors other than excessive high temperature or contamination, the manufacturer will provide warranty replacement. As a condition to the return of any product, or any constituent part thereof, to the factory, it shall be sent prepaid and a prior written authorization from the manufacturer assigning a Return Materials Number to the product or part shall be obtained.

IN NO EVENT SHALL THE MANUFACTURER BE LIABLE TO ANY PARTY FOR ANY DIRECT, INDIRECT, SPECIAL, INCIDENTAL, OR CONSEQUENTIAL DAMAGES, OR FOR ANY DAMAGES RESULTING FROM LOSS OF USE OR PROFITS, ANTICIPATED OR OTHERWISE, ARISING OUT OF OR IN CONNECTION WITH THE SALE, USE OR PERFORMANCE OF ANY PRODUCTS, WHETHER SUCH CLAIM IS BASED ON CONTRACT, TORT (INCLUDING NEGLIGENCE), ANY THEORY OF STRICT LIABILITY OR REGULATORY ACTION.

For the name of the authorized Thermo Scientific product dealer nearest you or any additional information, contact us:

2555 Kerper Blvd., Dubuque, Iowa, 52004-0797
Phone: 563-556-2241 or 1-800-553-0039
Fax: 563-589-0516
Web: www.thermo.com