Sample Cup Spinner

Part of Thermo Fisher Scientific

Thermo SCIENTIFIC

For Technical Support, please contact:
Thermo Fisher Scientific
5225 Verona Road
Madison, WI 53711-4495 U.S.A.
Telephone: 1 800 532 4752
E-mail: us.techsupport.analyze@thermofisher.com
World Wide Web: http://www.thermo.com/spectroscopy

For International Support, please contact:
Thermo Fisher Scientific
Telephone: +1 608 273 5017
E-mail: support.madison@thermofisher.com
World Wide Web: http://www.thermo.com/spectroscopy

269-237000, Rev A

Contents

Sample Cup Spinner

The Sample Cup Spinner is an accessory for the Antaris® Fourier-transform near-infrared analyzers that allows multi-point reflectance measurements of heterogeneous solids such as powders, granules and pellets.

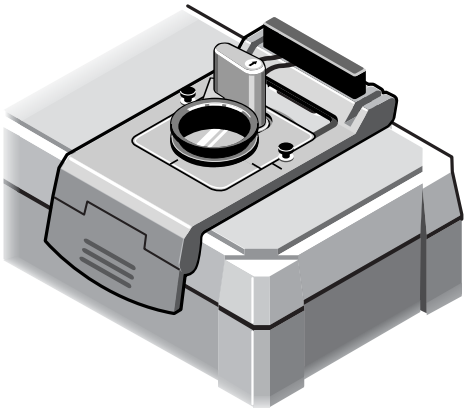

Antaris Sample Cup Spinner

To run a multi-point analysis of a bulk sample, you simply place the sample in a sample cup, insert the cup on the Sample Cup Spinner and start your workflow. The system rotates the cup during data collection and produces a spectrum that represents the bulk sample.

The Sample Cup Spinner interfaces with the integrating sphere sampling module and operates under RESULT® analysis software. The integrating sphere sampling module is included with the following Antaris systems:

- Antaris Method Development Sampling (MDS) System
- Antaris Solid Sampling System
- Antaris Tablet Analyzer System
- Antaris Reflection Transmission Sampling (RTS) System.

The picture below shows an Antaris Solid Sampling System with the Sample Cup Spinner installed.

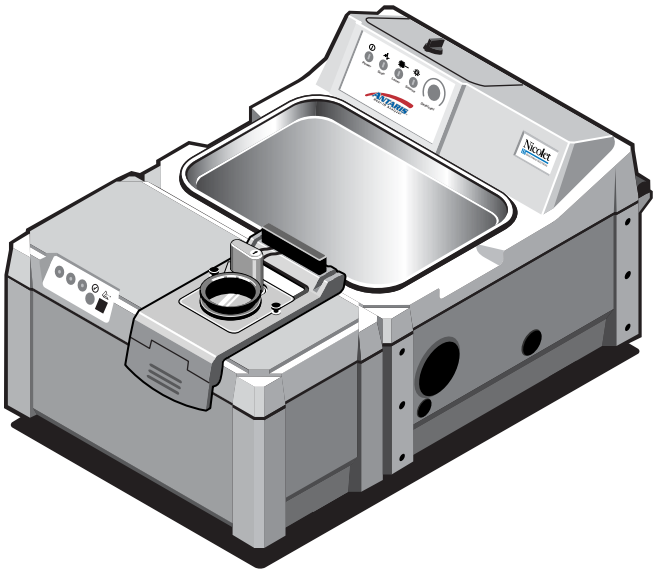

Antaris Solid Sampling System with Sample Cup Spinner

You should be familiar with the operation of your Antaris analyzer and RESULT software before using the Sample Cup Spinner. For complete information about the Antaris analyzer and system software, see your *Antaris User's Guide*.

About this manual

This manual discusses the important features of the Sample Cup Spinner accessory and the operating precautions. It also explains how to install, operate, maintain, service and store the accessory.

Note This document is included on the language pack CD that comes with RESULT version 1.2 or higher software (RESULT software suite revision 2 or higher). It is a portable document format (*.PDF) file titled *Antaris Sample Cup Spinner User's Guide*. To open a PDF file, you need a copy of the Acrobat Reader program version 4.0 or higher, which can be downloaded from the Adobe® Acrobat® web site. See the Adobe Acrobat on-line help for information about using Acrobat Reader. ▲

Conventions used in this manual

This manual includes safety precautions and other important information presented in the following format:

Note Notes contain helpful supplementary information. ▲

Notice Follow instructions labeled "Notice" to avoid damaging the system hardware or losing data. ▲

⚠ Caution Indicates a hazardous situation which, if not avoided, could result in minor or moderate injury. ▲

⚠ Warning Indicates a hazardous situation which, if not avoided, could result in death or serious injury. ▲

⚠ Danger Indicates a hazardous situation which, if not avoided, will result in death or serious injury. ▲

Questions or concerns

In case of emergency, follow the procedures established by your facility. If you have questions or concerns about safety or need assistance with operation, repairs or replacement parts, you can contact our sales or service representative in your area or use the information at the beginning of this document to contact us.

Important Features

The important features of the Sample Cup Spinner include:

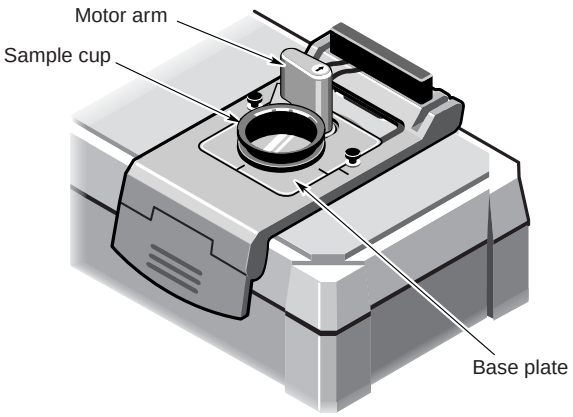

- Mounts securely on top of the Antaris analyzer, over the integrating sphere sampling module. No additional space is required.
- Hidden electrical connection via the integrating sphere data port. No external cable or power cord connections are used.
- Large diameter, open sample cup with a 4.8 cm quartz window for multi-point sampling of heterogeneous solids. Additional sample cups are available. See the Sample Cup Spinner Parts List for details.
- Compatible with the macro- and micro-powder sample cups for the Antaris MDS, RTS, Tablet Analyzer and Solid Sampling systems.
- Indicator for *sample cup orientation* to ensure repeatable cup handling and placement.
- Adjustable *sampling radius*.
- Pivoting motor arm for easy cup installation and removal.
- Automatic recognition, error detection and control through RESULT software, a dedicated analysis software package from Thermo Nicolet.

- Automated background measurements using either the integrating sphere's internal gold reference or an external reference sample, such as Spectralon®.
- Continuous sample measurements along the sampling radius for the specified duration.

Hardware and software requirements

To run the Sample Cup Spinner, your system must have the following items:

❑ One of the following Antaris analyzers:

- Antaris Method Development Sampling SystemAntaris Solid Sampling System
- Antaris Tablet Analyzer System
- Antaris Reflection Transmission Sampling System

❑ RESULT software version 1.2 or higher

❑ Antaris firmware version 1.11.

RESULT version 1.2 software is included on the CD for RESULT software suite, revision 2. For installation instructions, see the printed document that came with your RESULT software.

Dimensions and weight

The Sample Cup Spinner accessory weighs about 1.1 kg (2.4 lb). When installed on an Antaris analyzer, the accessory adds approximately 6.4 cm (2.5 inches) to the height of the sampling module; it does not change the overall length and width of the system. Approximate dimensions for the Sample Cup Spinner are provided in the illustration below.

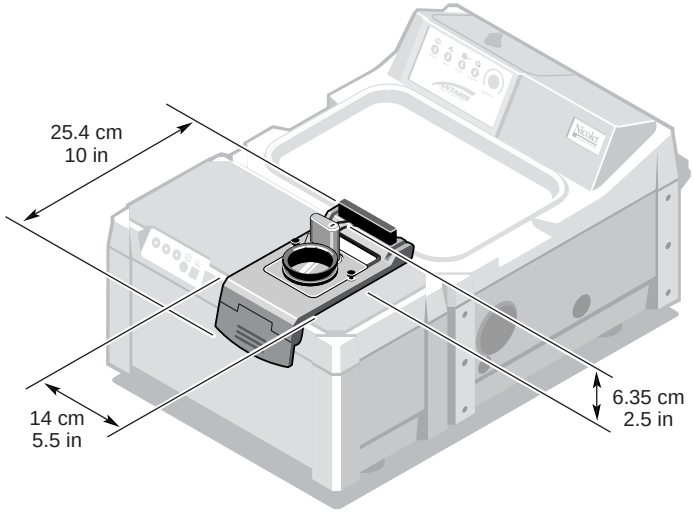

Sample Cup Spinner dimensions

Power consumption

The Sample Cup Spinner requires less than 0.5 W (1.7 Btu/hour) of power.

Operating precautions

Before operating the Sample Cup Spinner accessory, read the following operating precautions to avoid damaging components or causing injury to yourself. These precautions are repeated in relevant locations elsewhere in this document.

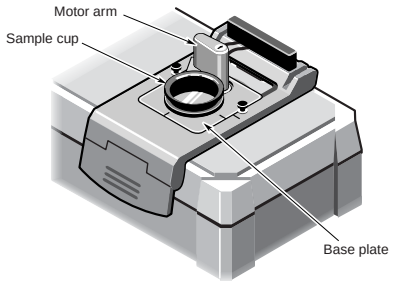

- Before installing the Sample Cup Spinner, complete the following steps:
  - Power off the Antaris analyzer to avoid possible damage to the electronics. Before you power off the analyzer, be sure to log off any software applications.
  - Inspect the connectors. If the connectors are clogged or jammed, contact your Thermo Nicolet service representative. *Do not* install the accessory and *do not* attempt to unclog the connectors yourself. See “Installing the Sample Cup Spinner” for details.
  - Remove the tablet analyzer module or any sample, sample holder, or accessory from the integrating sphere and clean the integrating sphere sampling area and window. See the “Integrating Sphere Sampling Module” chapter in the “Antaris Sampling” section of your *Antaris User’s Guide* for cleaning instructions.
  - Remove the sample cup from the Sample Cup Spinner accessory, if one is installed. See “Installing and removing a sample cup” in this document for instructions.
- When installing the Sample Cup Spinner accessory on your Antaris analyzer, keep your fingers clear of the Sample Cup Spinner base. The accessory fits tightly onto the analyzer and your fingers could get pinched if they are directly under the accessory while you lower it onto the analyzer. See “Installing the Sample Cup Spinner” in this document for more information.

- When using the Sample Cup Spinner to run samples, keep in mind that the sample cup quartz window is part of the instrument optics and must be handled with care. Chips, scratches or clouding in the window material will affect your spectral results. See “Cleaning the sample cup” in this document for more information.

- Before removing the Sample Cup Spinner accessory from your Antaris analyzer, complete the following tasks:

  - Exit RESULT software and power off the instrument.

  - Remove the sample cup from the accessory, if one is installed.

- Always remove the Sample Cup Spinner before performing any maintenance tasks inside the analyzer, such as replacing the laser.

Laser safety

The Antaris Integrating Sphere sampling module is a Class IIa (United States) and Class I (international) laser product. The accessible radiation levels are below Class IIa limits defined by the United States Department of Health and Human Services. The laser source in the analyzer is a helium/neon (HeNe) laser head. A small amount of laser radiation is combined with the energy from the white light source in the analyzer. This energy is accessible through the integrating sphere window.

In the same way you are cautioned against staring at the sun or its bright reflection, do not stare at the beam that exits the integrating sphere window or sample cup. The light beam is accessible through the integrating sphere window and sample cup only while the analyzer is actively collecting data and configured to collect the data from an external background or sample.

Notice For more information about laser safety and other safety issues, read the *Antaris Site and Safety Information Guide*. This guide should be read thoroughly by any person who operates and/or maintains the instrument. ▲

Installing the Sample Cup Spinner

Follow the instructions in this section to install the Sample Cup Spinner on an Antaris MDS, Solid Sampling, Tablet Analyzer or Reflection Transmission Sampling system.

One person can install the Sample Cup Spinner. No tools are required.

Notice Because the Sample Cup Spinner accessory has an electrical connection, we recommend that you power off the Antaris analyzer while installing and removing the accessory to avoid possible damage to the analyzer electronics. Before you power off the analyzer, be sure to log off any software applications. ▲

Note If you plan to install the Sample Cup Spinner on an Antaris system that includes the ValPro® System Qualification package, stop here and follow the instructions in the *ValPro Installation Qualification Procedure for the Sample Cup Spinner* to install the accessory and then qualify the system with the accessory installed. The new configuration must be qualified only after installing the Sample Cup Spinner for the first time. ▲

To install the Sample Cup Spinner:

1. **Remove the tablet analyzer module or any sample, sample holder, or accessory from the integrating sphere and clean the integrating sphere sampling area and window.**

   See the "Integrating Sphere Sampling Module" chapter in the "Antaris Sampling" section of your *Antaris User's Guide* for cleaning instructions.

2. **Remove the sample cup from the Sample Cup Spinner, if one is installed.**

To remove a sample cup, use your thumb to gently disengage the motor arm from the cup rim and then lift the cup up and off the accessory base.

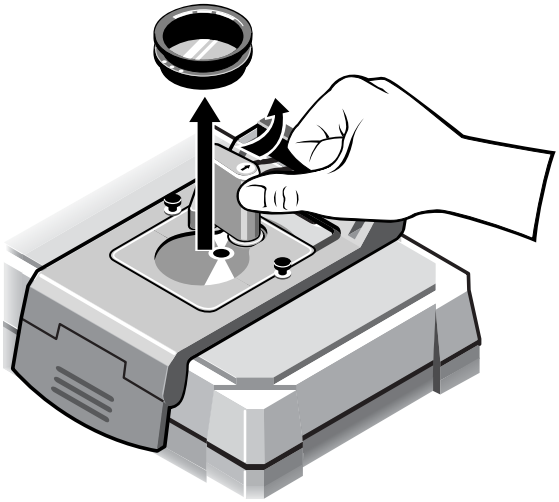

3. **Inspect the data port on the Antaris instrument and the connector on the bottom of the Sample Cup Spinner.**

   Make sure there is no debris on the male connector on the accessory and there is nothing clogging the female connector in the instrument's serial data port. If there is a clear protective cover over the data port, remove it.

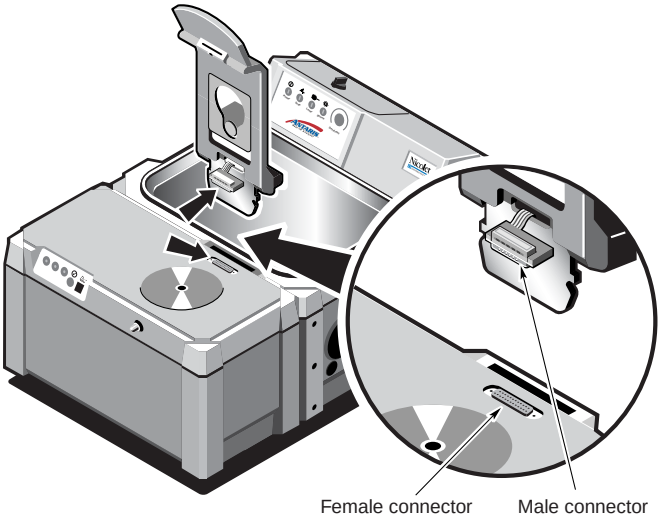

Caution If there is debris clogging the female connector on the data port, do not install the Sample Cup Spinner and do not unclog the connector yourself. Contact your Thermo Nicolet service representative. ▲

4. **With both hands, hold the Sample Cup Spinner upright with the base facing you.**

   The silver connector hinge should be facing downward and the male connector should be visible.

5. **Insert the connectors into the slot and data port on the instrument.**

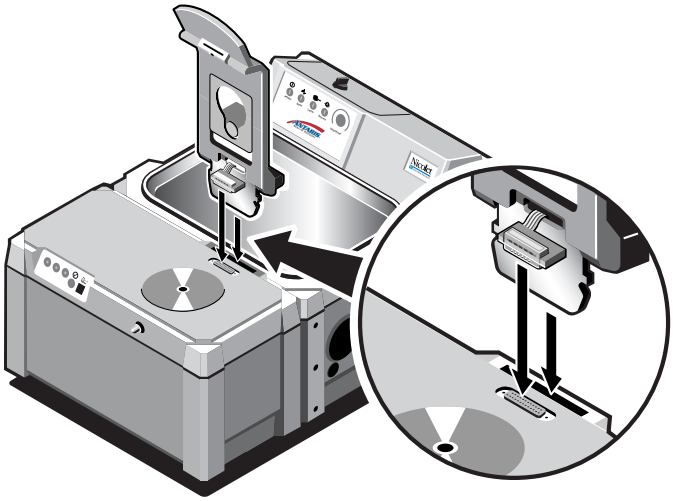

   The Sample Cup Spinner is properly connected to the electrical port when you hear it "click" in place and the connectors are firmly seated.

6. **Gently set the Sample Cup Spinner down on the top of the analyzer.**

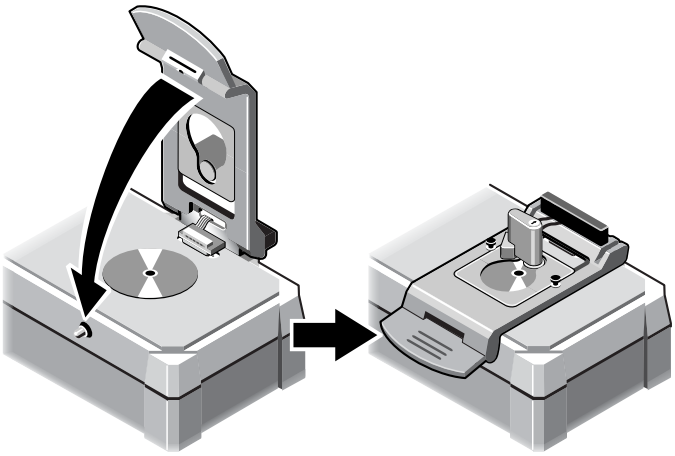

⚠ Caution The Sample Cup Spinner fits tightly onto the instrument. To avoid pinching your fingers, keep your fingers clear of the accessory base when pressing on the latch. ▲

7. **Firmly press down on the latch on the Sample Cup Spinner base until it connects into place.**

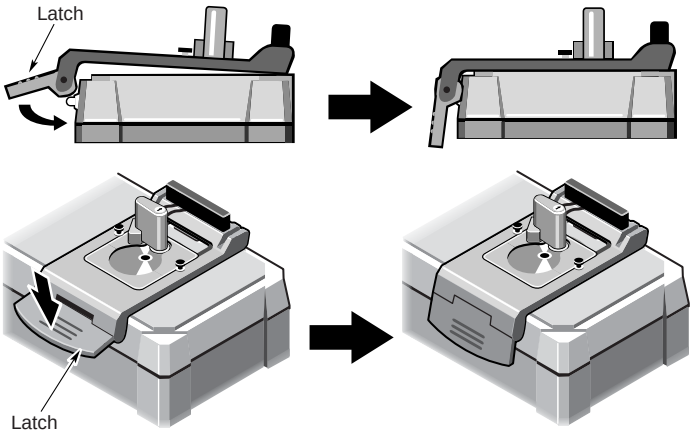

The accessory attaches to the instrument with a spring-loaded ball and socket. When the accessory is properly connected to the instrument, the bottom latch should be flush against the side of the instrument, and the accessory bottom should lie flat against the top of the instrument.

If the latch does not close or it does not lie flush against the instrument, or if the accessory bottom is not resting flat against the top of the instrument, remove the accessory and attempt to install it again.

8. **Power on the Antaris analyzer.**

9. **Start RESULT software.**

Installing and Removing a Sample Cup

The Sample Cup Spinner comes with one large diameter, open sample cup with a 4.8 cm quartz window. The large window allows multi-point sampling along a large radius.

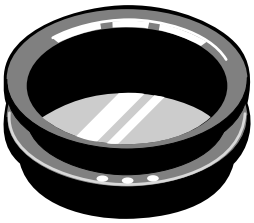

Large diameter sample cup

Additional sample cups are available. See the Sample Cup Spinner Parts List for more information. You can also use the macro- and micro-powder sample cups for the Integrating Sphere sampling module with the Sample Cup Spinner. The Sample Cup Spinner can be adjusted to accommodate the smaller windows mounted in the macro- and micro-powder cups.

The cups fit securely into the recessed opening in the Sample Cup Spinner base plate. The motor drive wheel presses against the outside edge of the cup and drives the cup rotation.

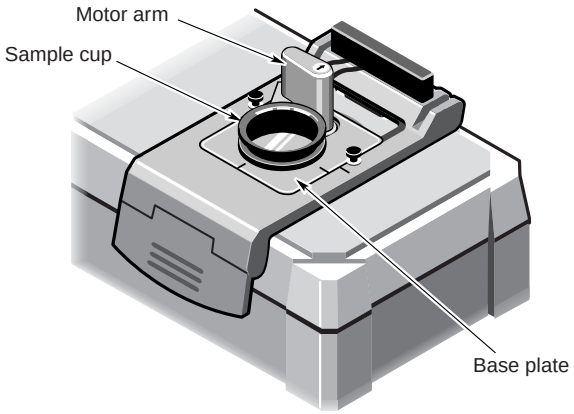

We use a sensor mounted on the accessory base and a magnet embedded in the cup edge to monitor cup rotation during a workflow. If the workflow is set up to rotate the sample cup and verify the cup rotation and the accessory does not confirm that the cup rotated, the workflow will generate an error message.

This section explains how to install and remove a sample cup and to adjust the *sample cup orientation* and *sampling radius*.

Installing a sample cup

To install a sample cup:

1. **Make sure the integrating sphere sampling area and window are clean.**

Notice Do not force the sample cup into position without first disengaging the motor arm or you may damage the rubber o-ring on the Sample Cup Spinner drive wheel. If you need to replace a damaged o-ring, see "Servicing the Sample Cup Spinner" in this document. . ▲

2. **Use your thumb to gently pivot the motor arm toward the back of the accessory while you slide the sample cup into the recessed opening in the accessory base plate, and then gently release the motor arm.**

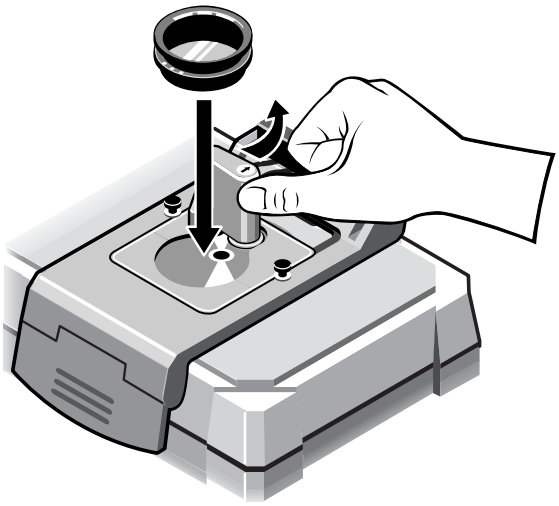

The cup should sit flat against the integrating sphere sampling window located underneath the Sample Cup Spinner accessory.

3. **To minimize the delay before the start of data collection, line up the middle dot on the cup edge with the groove on the base plate as shown in the illustration below.**

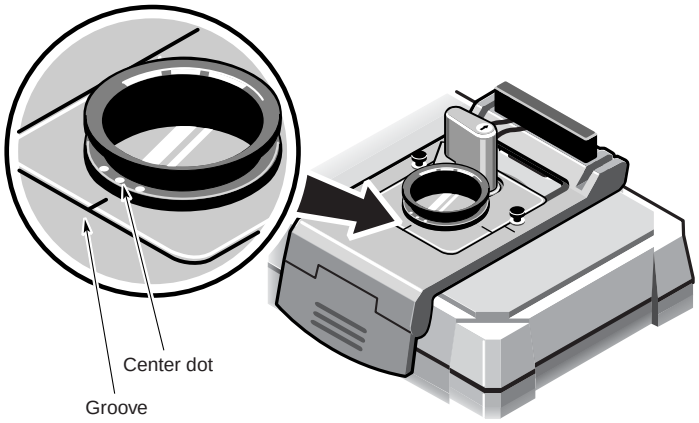

If you need to adjust the cup orientation, use your thumb to disengage the motor arm while you rotate the sample cup.

4. **If you need to adjust the *sampling radius*, loosen the two thumbscrews shown below, reposition the base plate by sliding it forward or backward and then tighten the thumbscrews.**

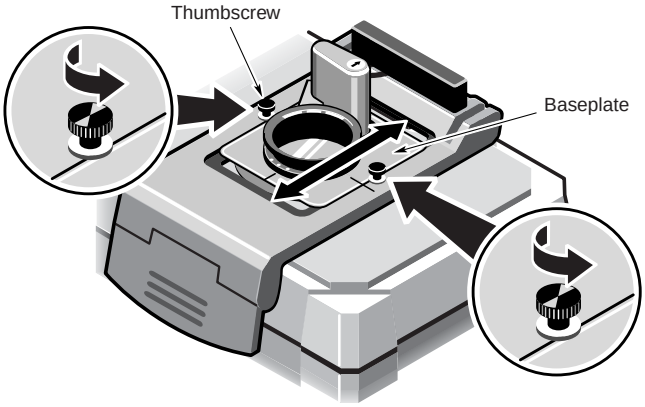

To maximize the sampling radius for the standard sample cup (4.8 cm window), position the base plate all the way forward (toward the front of the analyzer) as shown below.

Move the baseplate forward as far as it will go to maximize the sampling radius for the standard sample cup (4.8 cm window).

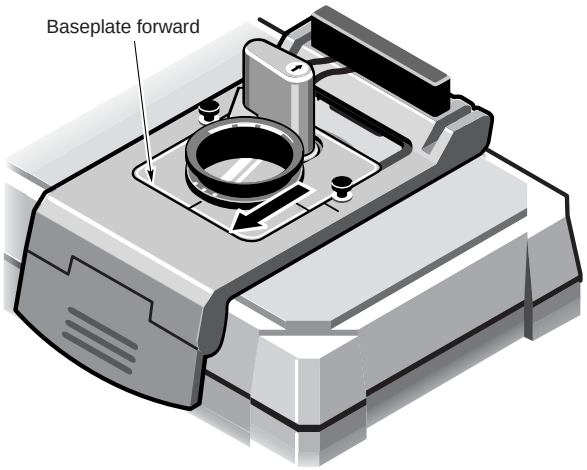

If you need a smaller sampling radius, line up the groove on the sliding base plate with the corresponding groove on the accessory base as shown below.

When the grooves are lined up and the standard sample cup is installed, the infrared beam is located about half way between the center of the window and the window's outer edge.

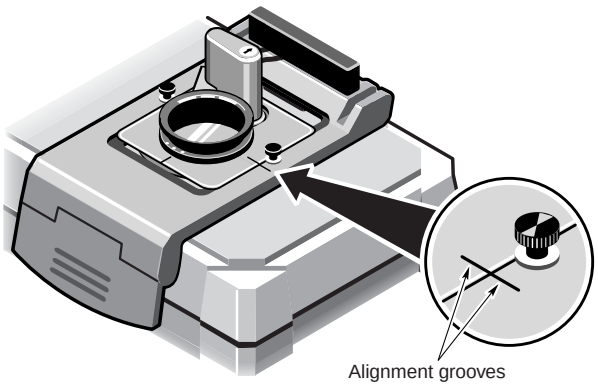

This places the infrared beam about half way between the center of the window and the window's outer edge. This is also the correct way to position the macro-powder cup for the maximum sampling radius.

If you slide the base plate all the way back (toward the back of the analyzer), the infrared beam will be centered in the sample cup for single-point sampling. This is the only usable position for the micro-powder cup.

Removing a sample cup

To remove a sample cup, use your thumb to gently disengage the motor arm from the cup rim and then lift the cup up and off the accessory base as shown below.

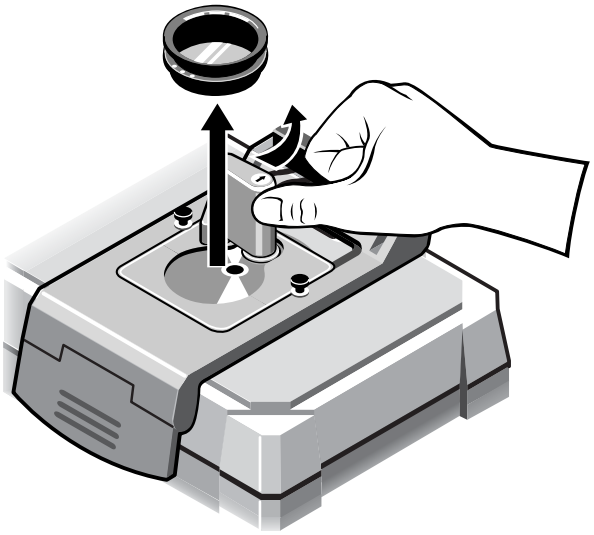

Removing a sample cup

Testing the Sample Cup Spinner

After you finish installing the Sample Cup Spinner accessory on your Antaris analyzer, run the test workflow to verify that the accessory is working properly. The workflow tests the rotational software commands and the Sample Cup Spinner mechanics.

You will need a clean sample cup and a sample to run the test workflow. Fill the cup with any type of powdered material or use a piece of white or colored paper trimmed to fill the sample cup window.

The file name for the test workflow is Valpro_Sample Cup Spinner.wfl. The workflow file is included on the RESULT 1.2 software CD (RESULT software suite revision 2) and should have been loaded into the RESULT Data\Workflows directory during the software installation.

You can run the test workflow from RESULT Operation or RESULT Integration software. This section explains how to run the test workflow from RESULT Integration. To learn how to run workflows from RESULT Operation, see the "RESULT Operation Software" section of your *Antaris User's Guide*.

To run the Sample Cup Spinner test workflow from RESULT Integration:

1. **Start the RESULT Integration application.**

   See the "RESULT Integration Software" section of your *Antaris User's Guide* if you need help locating or starting the application.

2. **Choose Open Workflow from the File menu in the RESULT Integration main window.**

3. **Find the directory for storing workflows, select the workflow Valpro_Sample Cup Spinner.wfl and then choose Open.**

After you open the workflow, its contents appear in the workflow navigation frame in the RESULT Integration main window.

4. **Choose the Test button on the RESULT Integration toolbar to display the Run Time Test window.**

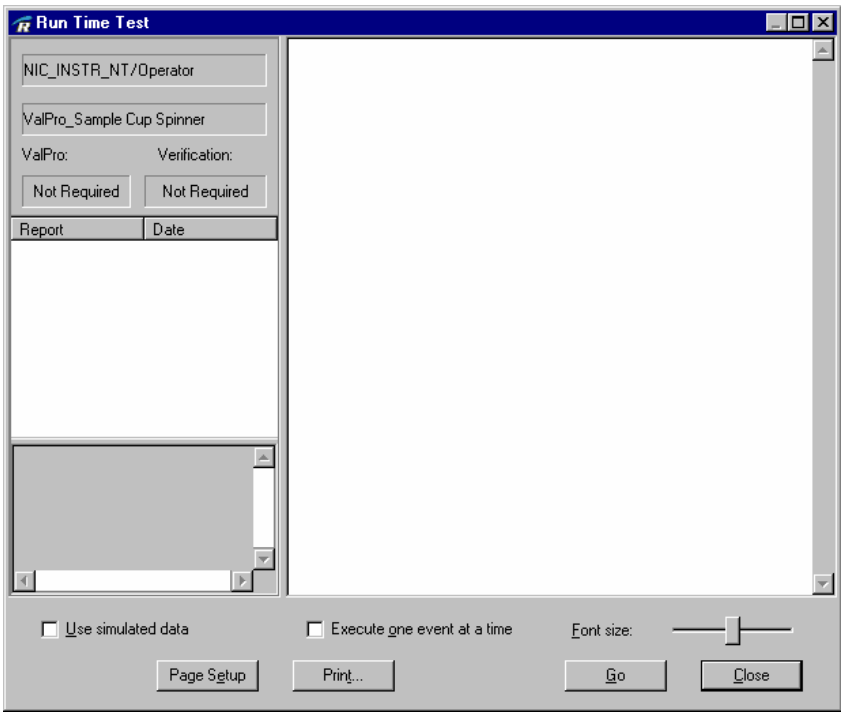

5. **In the Run Time Test window, choose Go to start the workflow.**

The workflow begins by collecting a background spectrum using the integrating sphere's internal gold reference. Then it displays the following prompt.

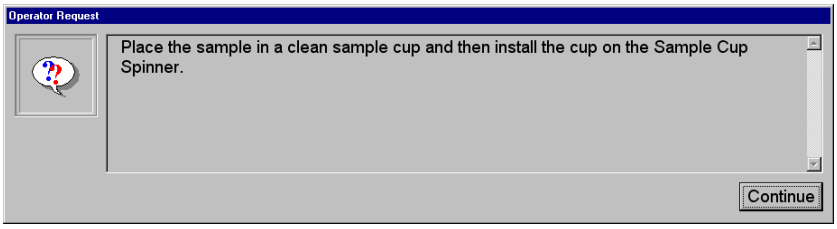

6. **Place the sample material in a clean sample cup, place the cup in the Sample Cup Spinner and then choose Continue.**

   You can use any type of powdered material for the sample or use a piece of white or colored paper trimmed to fill the sample cup window. If you use a powder, fill the cup at least half way with the powder so the window at the bottom of the cup is completely covered.

   The workflow collects and archives two sample spectra using the Sample Cup Spinner, first with the cup verification software parameter on and then without verifying the cup rotation. (See "Developing workflows for the Sample Cup Spinner" for more information about setting up sample cup verification.) Then it checks for any workflow errors and generates and archives an analysis report.

The test workflow takes about 1 minute to complete. The test results (pass or fail) are displayed in a workflow report, similar to the example shown below.

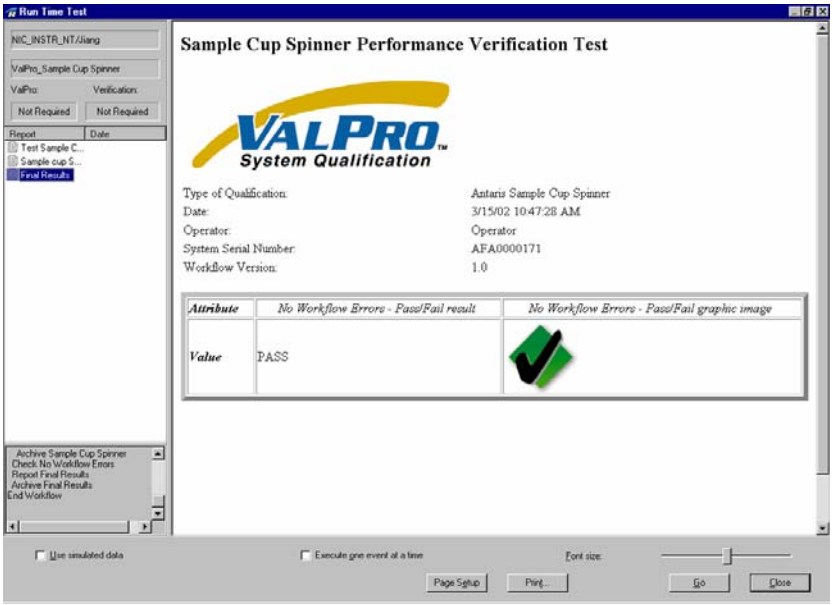

The workflow also archives the report and stores the pass or fail result in the RESULT database. See "Archive Events" and "Check Events" in the "RESULT Integration Software" section of your *Antaris User's Guide* for information about archiving reports and storing pass or fail results in the RESULT database.

If errors occur in the Sample Cup Spinner mechanics during the test workflow, for example, if something interferes with the cup rotation or if no cup is installed, the workflow displays a workflow error similar to the one shown below:

Errors While Running Workflow

Event Name	Error Description
Collect Test Sample Cup Spinner	Could not colllect data using Antaris integrating sphere. Unable to verify Antaris sample cup rotation.

Workflow errors can be viewed in the display area of the RESULT Integration main window after the workflow ends or stops running. The test workflow is also set up to log any errors in a workflow error report. See "Archive Events, Save Workflow Error Report parameter" in the "RESULT Integration Software" section of your *Antaris User's Guide* for information about accessing workflow error reports.

To continue the test, remove the obstruction or install a sample cup and then restart the workflow.

Compatible Sample Types

The Sample Cup Spinner accessory is designed for multi-point sampling of heterogeneous solids. The accessory interfaces with the Antaris integrating sphere sampling module.

Because the integrating sphere uses diffuse-reflectance spectroscopy, it is useful for analyzing powders or "rough" solids. The following are some examples of sample types that can be used with the integrating sphere and the Sample Cup Spinner:

- Powders
- Coarse granules
- Polymer pellets
- Solids with a rough or diffuse surface, such as coated textiles, paper, wood, polymers, and plastics (especially plastics with a milky, opaque appearance).

Notice We do not recommend using the sample cups for sampling gels or liquids because these types of substances can be difficult to remove and clean from the sample cup window without damaging the window. ▲

When using the integrating sphere, consider sample thickness or the amount of sample used for the analysis. If a solid sample is too thin or if there is not enough of a powdered or granular material, you may encounter problems with the spectra. See "Common Problems with Spectral Data" in the "Integrating Sphere Sampling Module" chapter of your *Antaris User's Guide* for more information about sample thickness and sample amount.

Preparing Samples

Notice Handle the sample cups with care. Do not use a laboratory spatula or other metal tool to stir the sample or to remove the sample from a sample cup. Chips, scratches or clouding in the window material will affect your spectral results. ▲

To prepare powders, pellets or granules for analysis using the standard sample cup:

1. **Place the sample cup on a flat surface.**

   To catch any sample residue, place a clean cloth or paper towel underneath the sample cup.

2. **Fill the sample cup with the sample until the cup is overflowing.**

   You can tamp the cup to help the particles settle into the cup consistently, and then add more sample to the cup so it is overflowing.

3. **Use a spatula or flat edge to level off the top of the sample cup, as shown below.**

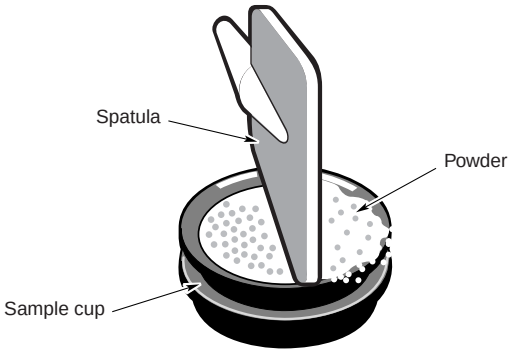

To prepare other solids for analysis using the standard sample cup:

1. **Trim the sample to a size that will fit in the sample cup and fill the sample cup window.**

2. **Place the sample in the sample cup so it sits flush against the cup bottom.**

Collecting Backgrounds

When using the Sample Cup Spinner, you can collect backgrounds using the integrating sphere's internal diffuse gold reference or with an external reference, as directed by the workflow you are running. The workflow will direct how often to collect a background spectrum. You can set up a workflow to collect a background before every sample, after a specified period, or every time someone runs the workflow. See "Collect Events" in the "RESULT Integration Software" section of your *Antaris User's Guide* for details about specifying the frequency of background collections in workflows. The most recent background spectrum remains in memory and is compared against sample data until a new background spectrum is collected.

Depending upon the workflow, you may or may not be prompted to begin background data collection. For example, if the workflow is set up to collect backgrounds using the integrating sphere's internal reference, background collection should occur automatically. Workflows designed to use an external background reference should display an operator prompt when it is time to collect a background spectrum. See "Collect Events" in the "RESULT Integration Software" section of your *Antaris User's Guide* for details about specifying user prompts for background collections in workflows.

The background material can be placed in a clean sample cup for analysis or directly on the integrating sphere sampling window (sample cup removed). Whether you are using an internal or external reference, there is no need to remove the Sample Cup Spinner accessory to collect a background spectrum.

The "Common Problems with Spectral Data" section of the "Integrating Sphere Sampling Module" chapter of your *Antaris User's Guide* contains suggestions if a background spectrum is atypical from previously-collected background spectra.

Using the internal reference

To set up a workflow to collect backgrounds from the internal gold reference, link an integrating sphere background specification to your sample specification and make sure the background specification has the Collect Background Through Same Beam Path As Sample check box cleared, as shown below:

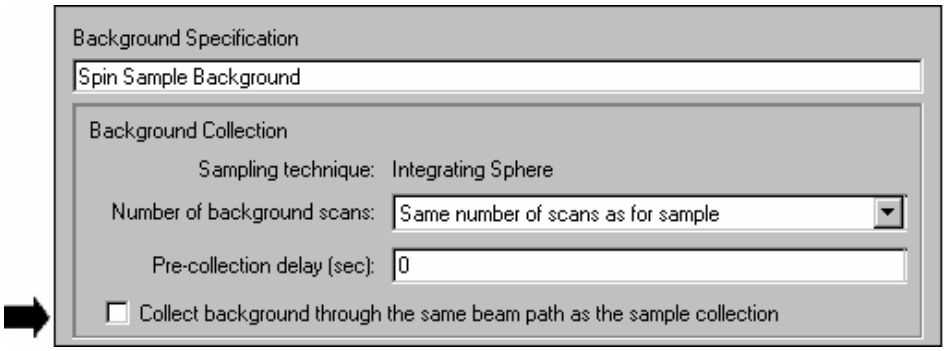

See “Developing Workflows for the Sample Cup Spinner” in the next section for more information.

The internal gold reference is mounted on a software-controlled arm that swings the internal reference into and out of the near-infrared beam. Normally, the reference is located in the beam except when the system is collecting sample data or data from an external background reference. When collecting a background from the internal gold reference, the gold reference stays in the beam and background collection begins immediately. The status indicator in the software shows you the status of the background collection.

A typical background spectrum using the internal diffuse gold reference should resemble the following:

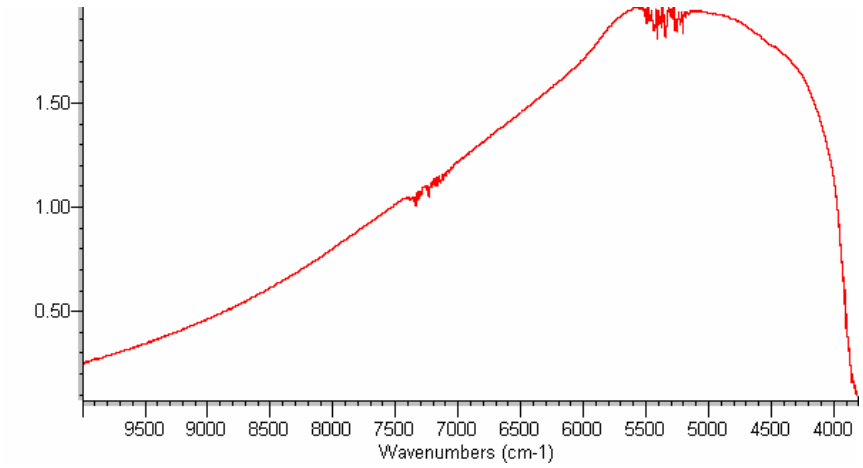

Typical diffuse gold background spectrum collected with the integrating sphere

See the "Common Problems with Spectral Data" section in the "Integrating Sphere Sampling Module" chapter of your *Antaris User's Guide* if your background spectrum is not similar to the above spectrum, or if it is atypical from previous background spectra.

Using an external reference

If collecting a background using an external reference, prepare the background sample for analysis and make sure your collection events are set up to collect backgrounds through the sample beam path. You can place the background sample in a clean sample cup or directly on the integrating sphere sampling window (sample cup removed). There is no need to remove the Sample Cup Spinner accessory to collect a background spectrum.

Some examples of materials that can be used as an external background sample for reflection measurements include:

- Diffuse gold
- Spectralon®, which is a very diffuse substance with high reflectance
- Ceramic.

To set up a workflow to collect backgrounds from an external reference sample, link an integrating sphere background specification to your sample specification and make sure the background specification has the Collect Background Through Same Beam Path As Sample check box selected, as shown below:

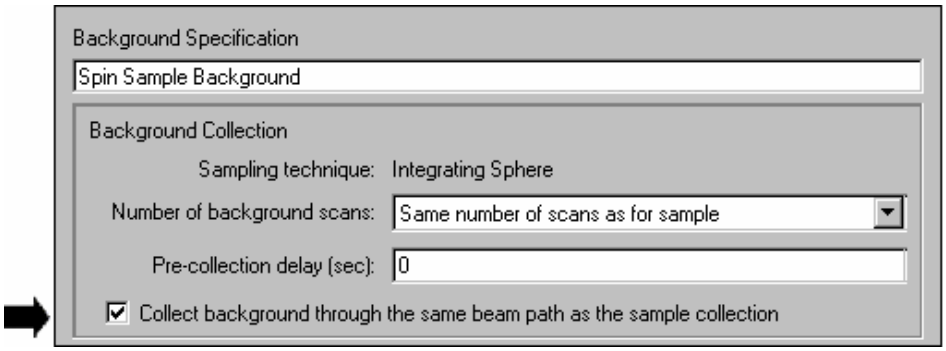

See “Developing Workflows for the Sample Cup Spinner” in the next section for more information.

The green indicator on the instrument will be on when the instrument is ready to begin collecting the background. You will hear the flag under the integrating sphere window “click” open as the software moves the internal gold reference out of the near-infrared beam. The status indicator in the software will display the status of the data collection. Do not interfere with the Sample Cup Spinner while the instrument is collecting the background data. When the instrument has finished collecting the background data, the flag under the integrating sphere will “click” closed.

Developing Workflows for the Sample Cup Spinner

You can operate the Sample Cup Spinner using workflows developed in RESULT Integration software. The workflows can be run in RESULT Integration or RESULT Operation software. Each collection event set up to collect sample data from the Sample Cup Spinner produces a single sample spectrum, which can be used by other events in the workflow.

This section explains the workflow specifications and parameters that are specific to the Sample Cup Spinner, including:

- Sample specifications for the Integrating Sphere and Sample Cup Spinner
- Background specifications for the Integrating Sphere and Sample Cup Spinner.

It also provides a brief tutorial to help you add a collection event that runs the Sample Cup Spinner to a workflow. For detailed information about creating and running workflows using RESULT software, see your *Antaris User's Guide*.

Note The software features described in this chapter are available in RESULT software version 1.2 or higher (RESULT Software Suite, revision 2 or higher). ▲

Sample specifications

Use the Integrating Sphere sample specification to set up sample data collection with the Sample Cup Spinner. The Integrating Sphere sample specifications contain data collection parameters that are optimized for collecting diffuse-reflectance data from powders, granules, pellets and other solids using the Antaris integrating sphere sampling module. The Sample Cup Spinner list box specifies whether the Sample Cup Spinner will be used for data collection and whether collection should occur with or without verifying sample cup rotation.

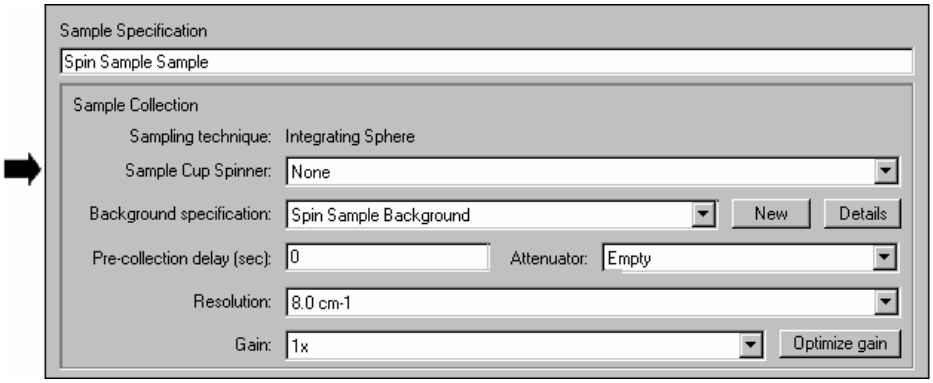

Integrating Sphere sample specification

The options that appear in the Sample Cup Spinner drop down list are described below:

- **None.** Use this option to set up data collection using the integrating sphere and Sample Cup Spinner with no rotation of the sample cup. This is the default setting for the Sample Cup Spinner parameter and the recommended setting when no Sample Cup Spinner accessory is installed.

- **Spin Sample Cup.** Select this option if you want the software to spin the sample cup during sample collection without performing any error checking. This setting completes data collection slightly faster but does not produce an error if the cup fails to rotate or if no cup is installed.

- **Spin Sample And Verify Cup Rotation.** Select this option if you want the software to spin the sample cup during sample collection and perform error checking. If the cup fails to rotate during data collection or if no cup is installed, the software stops the workflow and displays the following workflow error:

Errors While Running Workflow

Event Name	Error Description
Collect Test Sample Cup Spinner	Could not colllect data using Antaris integrating sphere. Unable to verify Antaris sample cup rotation.

The remaining parameters on the integrating sphere sample specification are described in the "Sample Specifications" section of "Chapter 3 Workflow Events and Specifications" in the "RESULT Integration Software" section of your *Antaris User's Guide*. For parameter settings and specifications recommended for use with the integrating sphere and Sample Cup Spinner accessory, see the "Integrating Sphere Sampling Module" chapter in the "Antaris Sampling" section of your *Antaris User's Guide*.

Background specifications

Use the Integrating Sphere background specification to set up background data collection with the Sample Cup Spinner. The Integrating Sphere background specifications contain data collection parameters that are optimized for collecting background spectra using the Antaris integrating sphere sampling module. There are no special parameters for setting up background collections with the Sample Cup Spinner.

You may collect a background using the integrating sphere's internal diffuse gold reference or from an external reference sample. Use the Collect Background Through Same Beam Path As Sample check box shown below to specify whether the background will be measured from the internal or an external reference.

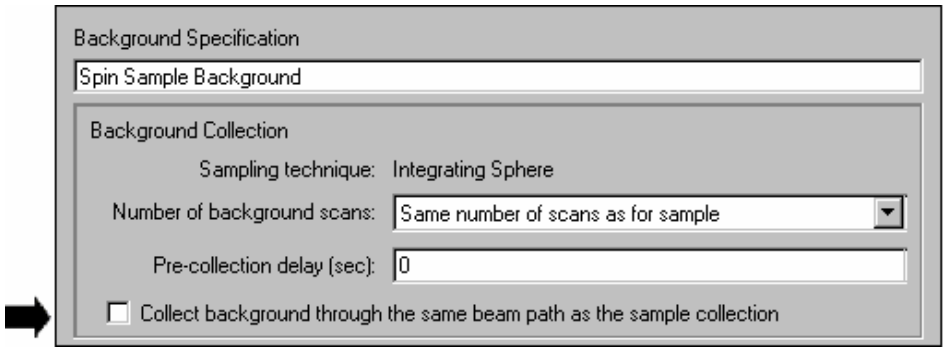

Integrating Sphere background specification

When the check box is cleared, the software collects background spectra from the integrating sphere's internal diffuse gold reference. The internal gold reference is mounted on a software-controlled arm that swings the reference into and out of the near-infrared beam. Normally, the reference is located in the beam except when the system is collecting sample data or data from an external background reference. When collecting a background from the internal gold reference, the gold reference stays in the beam and background collection begins immediately. The status indicator in the software shows you the status of the background collection.

If the check box is selected, background collection occurs through the sample beam path, allowing background collection from an external reference sample. See "Collecting Backgrounds Using an External Reference" in this document for examples of materials that can be used as an external background sample. The background sample can be placed directly on the integrating sphere window or in a clean sample cup mounted on the Sample Cup Spinner. If you place the background in a sample cup, keep in mind that the software does not rotate the cup during background collection.

The green indicator on the instrument will be on when the instrument is ready to begin collecting the background. You will hear the flag under the integrating sphere window "click" open as the software moves the internal gold reference out of the near-infrared beam. The status indicator in the software will display the status of the data collection. Do not interfere with the Sample Cup Spinner while the instrument is collecting the background data. When the instrument has finished collecting the background data, the flag under the integrating sphere will "click" closed.

See "Collecting Backgrounds" in this document for more information about background collections in a workflow.

The remaining parameters on the integrating sphere background specification are described in the "Background Specifications" section of "Chapter 3 Workflow Events and Specifications" in the "RESULT Integration Software" section of your *Antaris User's Guide*. For parameter settings and specifications recommended for use with the Sample Cup Spinner accessory, see the "Integrating Sphere Sampling Module" chapter in the "Antaris Sampling" section of your *Antaris User's Guide*.

Creating a basic workflow

Use RESULT Integration software to create and test workflows for the Sample Cup Spinner. Before you begin working with the Sample Cup Spinner, you should be familiar with the features in the RESULT Integration main window and the tools for creating and running workflows. See the "RESULT Integration Software" section of your *Antaris User's Guide* for more information.

To create a workflow for the Sample Cup Spinner, either start the workflow from scratch or open and then resave one of the example workflows. To start a workflow from scratch, either use New Workflow in the RESULT Integration File menu or use the workflow wizard. To learn the file names and locations of the example workflows for the Sample Cup Spinner, see "Example Workflows" in this document.

Use the Add button on the RESULT Integration toolbar or the Add command in the Edit menu to add events and specifications to the workflow. See "Adding Events and Specifications to a Workflow" in the "RESULT Integration Software" section of your *Antaris User's Guide* for more information.

The following table describes the basic elements of a Sample Cup Spinner collection event in a workflow. The example demonstrates the relationship between workflow events and specifications and highlights the features relevant to the Sample Cup Spinner.

See "Testing the Sample Cup Spinner" for information about running a workflow in RESULT Integration software. To learn how to transfer workflows to RESULT Operation software, see "Transferring a Workflow to RESULT Operation" in the "RESULT Integration Software" section of your *Antaris User's Guide*.

Basic Elements of a Sample Cup Spinner collection event in a Workflow

Workflow Event	Associated Specification	Description
Collect event		Add a Collect event to the workflow. In the Collect event parameters: • Set Number Of Sample Scans, Data Format and Background Frequency. • If you want the workflow to display a prompt when it is time to place a sample in the sample cup or to install the cup on the Sample Cup Spinner, choose the New button to the right of the Before Sample operator prompt to create a sample prompt specification. • If you want the workflow to display a prompt when it is time for the background measurement, choose the New button to the right of the Before Background operator prompt to create a background prompt specification. • Use the New button to create a sample specification.
	*Prompt specifications	Use the Prompt specification parameters to define the text for the operator prompt dialog boxes.
	Integrating Sphere sample specification	In the Integrating Sphere sample specification parameters: • Set Attenuator, Resolution, and Gain. • Set the Sample Cup Spinner list box. The options include: - **None**. No rotation - **Spin Sample Cup**: Rotates cup during sample collection - **Spin Sample And Verify Rotation**: Rotates cup during sample collection and checks for errors. • Use the New button to create an Integrating Sphere background specification.
	Integrating Sphere background specification	In the Integrating Sphere background specification parameters: • Set Number of Background Scans. • Define the beam path for background collections by setting the Collect Background Through Same Beam Path As Sample check box. - If using the internal gold reference, clear the check box. - If using an external reference, select the check box.

* Workflow elements marked with an asterisk (*) are optional.

Example Workflows

The CD for RESULT software suite, revision 2 or greater contains three RESULT workflows you can use to test and operate the Sample Cup Spinner. The example workflows are described briefly below.

These workflow files are included on the software CD for RESULT version 1.2 or greater (RESULT software suite, revision 2 or greater) and should have been loaded into the RESULT Data\Workflows directory during the software installation. You can run the example workflows from RESULT Operation or RESULT Integration software. See "Testing the Sample Cup Spinner" for instructions on running workflows from RESULT Integration. To learn how to run workflows from RESULT Operation software, see the "RESULT Operation Software" section of your *Antaris User's Guide*.

Note If you don't have a sample handy to run the example workflows, run them in simulation mode so they use the spectra stored with the workflow. RESULT Integration provides an option to run workflows in simulation mode from the Run Time Test window. To display the Run Time Test window, choose Test from the RESULT Integration toolbar. See "Testing a Workflow" in the "RESULT Integration Software" section of your *Antaris User's Guide* for more information about the Run Time Test window. ▲

The Comment field of the first workflow event provides a detailed description of each workflow. To display comments for a workflow, open the workflow in RESULT Integration software and then select the first workflow event displayed in the workflow navigation frame.

- **Sample Cup Spinner_1.wfl** – This is a basic workflow to run the Sample Cup Spinner with built-in error detection. The workflow begins by collecting a background spectrum using the integrating sphere's internal gold reference. Then it collects a sample spectrum using the Sample Cup Spinner, creates a sample report and then archives the spectrum and the report. If you run this workflow when the Sample Cup Spinner and sample cup are not installed, or when the sample cup fails to rotate, the workflow produces a workflow error.

  When you are ready to start the workflow, place the sample material in a clean sample cup and then install the cup on the Sample Cup Spinner. Choose Continue to start sample collection.

- **Sample Cup Spinner_2.wfl** – This is a basic workflow to run the Sample Cup Spinner without error detection. The workflow begins by collecting a background spectrum from an external background

reference such as Spectralon®. Then it collects a sample spectrum using the Sample Cup Spinner, creates a sample report and then archives the spectrum and the report.

You must have an external background reference in order to run this workflow. See "Collecting backgrounds using an external reference" for suggestions of suitable background materials.

Before you start the workflow, place the background material directly on the integrating sphere window or in a clean sample cup installed on the Sample Cup Spinner. After the prompt, remove the background material, place the sample material in the sample cup and then place the sample cup on the Sample Cup Spinner. Choose Continue to start sample collection.

Note This workflow does not produce an error if the Sample Cup Spinner and sample cup are not installed, or if the sample cup fails to rotate. ▲

- **ValPro_Sample Cup Spinner.wfl** – Use this workflow to verify the Sample Cup Spinner operation when the accessory is installed on an Antaris system. The workflow performs two sample collections with the Sample Cup Spinner, one with error detection and one without, and then checks for any workflow errors. Both sample collections use the integrating sphere's internal gold reference for background collection. The workflow creates and archives three reports to record the two sample spectra and the pass or fail result from the error check.

  Before you start the workflow, place the sample material in a clean sample cup and then place the cup on the Sample Cup Spinner. We suggest using a simple powder or a piece of paper trimmed to fit the diameter of the cup window. Choose Continue after the prompt to start the first sample collection. Do not disturb the sample during data collection.

  For Antaris systems that have Thermo Nicolet's ValPro system qualification package, use this workflow as a starting point when creating a workflow to qualify the Sample Cup Spinner installation. See the *ValPro Installation Qualification Procedure for the Sample Cup Spinner* document for more information.

Removing the Sample Cup Spinner

The Sample Cup Spinner can remain on the instrument at all times unless you need to remove it to sample large items or use another sample holder or accessory with the integrating sphere, attach a tablet analyzer to the instrument, or replace internal instrument parts.

Notice Because the Sample Cup Spinner has an electrical connection, we recommend that you power off the instrument while installing and removing the Sample Cup Spinner to avoid possible damage to the electronics. Before you power off the instrument, be sure to log off any software applications. ▲

To remove the Sample Cup Spinner:

1. **Remove the sample cup from the Sample Cup Spinner, if one is installed.**

   To remove the sample cup, use your thumb to gently disengage the motor arm from the cup rim and then lift the cup up and off the accessory base. See “Installing and Removing a Sample Cup” for detailed instructions.

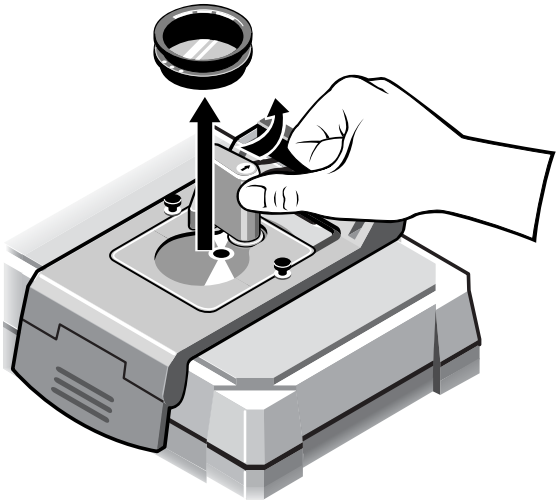

2. **Release the latch on the Sample Cup Spinner base.**

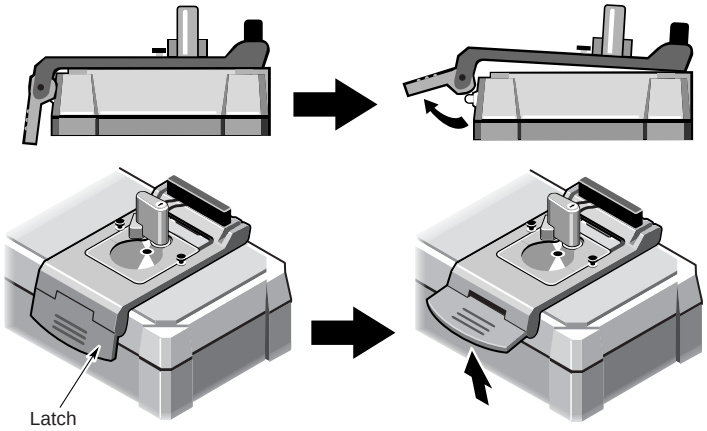

3. **Lift the Sample Cup Spinner until it is perpendicular to the instrument.**

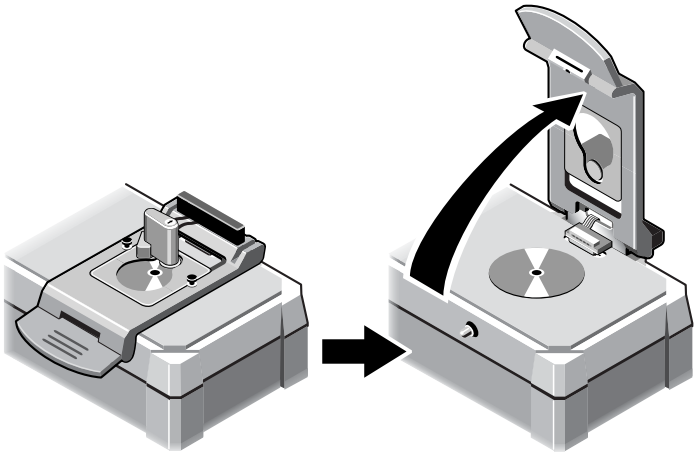

4. **Carefully pull up on the Sample Cup Spinner to detach the connector from the data port and remove the silver hinge from the sleeve in the instrument.**

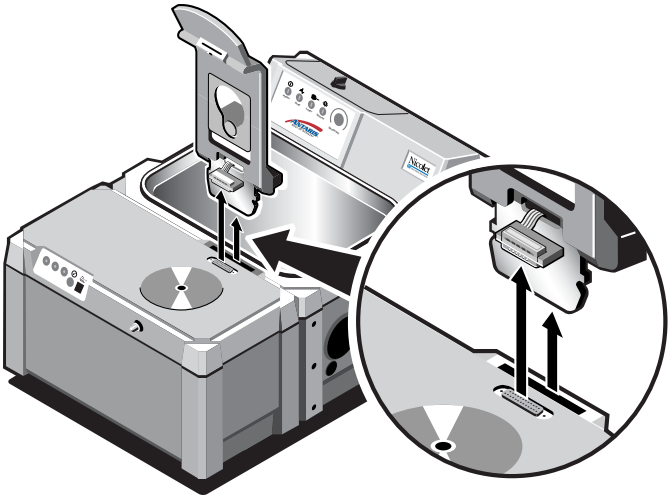

5. **Replace the tablet analyzer module or accessory, if desired, or replace the clear protective cover over the data port.**

Maintaining the Sample Cup Spinner

Carefully read and follow the information in this section about storing and cleaning items in order to prevent damage from occurring to the Sample Cup Spinner and sample cups.

Storing the Sample Cup Spinner

When the Sample Cup Spinner is not connected to the instrument, store it in a dry, dust-free environment such as a clean cabinet or box. Wrap the sample cup in a clean nonabrasive cloth to protect the quartz window from scratches or other damage.

Cleaning the Sample Cup Spinner

Parts of the Sample Cup Spinner may accumulate debris or become contaminated from sample materials. Follow the recommendations in this section for cleaning and maintaining the Sample Cup Spinner components.

⚠ Caution Because the Sample Cup Spinner accessory has an electrical connection, be sure to remove the accessory before cleaning it. Before removing the Sample Cup Spinner, be sure to exit the RESULT software and power off the instrument. ▲

If residue accumulates on the Sample Cup Spinner base plate, clean it with a dry or damp cloth and a mild soap solution, if necessary.

Be sure to remove any residue left by the soap solution with a dry or damp, soft cloth. Dry the Sample Cup Spinner bottom with a dry, soft cloth.

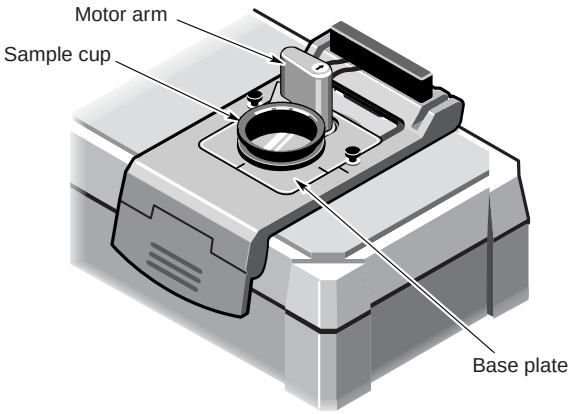

Cleaning the sample cup

Clean the sample cup with a mild soap solution and then rinse the cup in distilled water. Dry the cup with a jet of clean air or a non-abrasive cloth. Make sure you thoroughly dry the sample cup before storing it or using it for data collection.

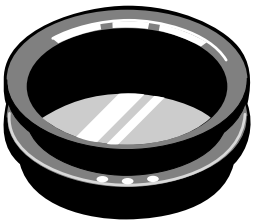

Sample cup

Notice Handle the sample cups with care. Do not use a laboratory spatula or other metal tool to remove the sample from a sample cup. Chips, scratches or clouding in the window material will affect your spectral results. ▲

Servicing the Sample Cup Spinner

You may replace the drive wheel o-ring if it comes loose or is damaged. All other service must be done by a Thermo Nicolet certified service engineer.

Replacing the drive wheel o-ring

The Sample Cup Spinner motor arm has a replaceable o-ring on the drive wheel. If the o-ring comes loose or is damaged or if the sample cup doesn't spin or spins irregularly, follow the instructions below to replace it.

The drive wheel and o-ring are located at the base of the motor arm.

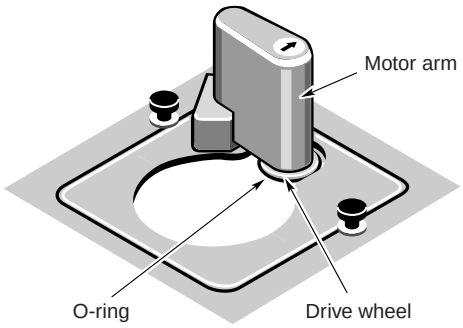

To remove the o-ring, use your finger to gently roll it down and off the drive wheel. Use a knife, if necessary, to remove any globs of glue from the groove in the drive wheel. See the Sample Cup Spinner Parts List for information about ordering a new o-ring.

To install a new o-ring, apply a thin layer of glue to the o-ring groove in the drive wheel. We recommend using glue that contains cyanoacrylate ester as the active ingredient.

After applying the glue, gently slide the o-ring into the groove and then quickly wipe any excess glue off the exposed area of the O-ring. Allow time for the glue to dry thoroughly before using the Sample Cup Spinner.

Notice When installing a sample cup, pivot the motor arm out of the way, install the cup and then gently release the motor arm to avoid damaging the o-ring. ▲

Glossary

sample cup orientation Position of the magnet embedded in the sample cup relative to the sensor mounted on the Sample Cup Spinner accessory. The magnet and sensor are used to monitor cup rotation during data collection for workflows that are set up to spin the sample cup and verify the cup rotation.

sampling radius The circle of points on the sample cup window where the near-infrared beam passes through the sample.

Troubleshooting

This chapter describes some possible problems you may encounter while operating the Sample Cup Spinner and offers suggestions for resolving them. If you are unable to resolve a problem or have questions or concerns, contact your local Thermo Nicolet service representative. See "Contacting Thermo Nicolet" in this guide for more information.

Note Updated troubleshooting information can also be found in the release notes and other updates for Antaris products and RESULT software. ▲

Problem	Possible Causes	Suggestions
A software error message says the sample cup is not spinning.	The Sample Cup Spinner is installed incorrectly.	Make sure the Sample Cup Spinner electrical connector is firmly seated in the female connector on the Antaris instrument and the connectors are free of debris. See "Installing the Sample Cup Spinner" for details.
	The sample cup is installed incorrectly.	Make sure the sample cup is firmly seated in the recessed opening in the Sample Cup Spinner base plate. See "Installing a Sample Cup" for details.
	Your workflow is set up to verify sample cup rotation but you are using a sample cup that does not include the magnet used to monitor cup rotation.	Make sure you are using the standard sample cup (4.8 cm window) or a macro-powder cup fitted with the magnet used to monitor cup rotation during a workflow. Macro-powder cups that came with Antaris systems older than July 2002 do not have the magnet. None of the micro-powder cups that come with Antaris systems have the magnet. If you need to use an older macro-powder cup or any micro-powder cup, change the Sample Cup Spinner list box setting in the workflow sample specification to Spin Sample Cup instead of Spin Sample And Verify Cup Rotation. The older cups work but cannot be used with the Sample Cup Spinner error detection feature of RESULT software.

Problem	Possible Causes	Suggestions
You cannot latch the Sample Cup Spinner to the Antaris instrument.	You left the cover on the Antaris electrical connector.	Remove the Sample Cup Spinner accessory. If there is a clear protective cover over the female electrical connector on the Antaris instrument, remove the cover and then install the accessory.
	One of the connectors is clogged with debris.	Remove the Sample Cup Spinner accessory. Make sure there is no debris clogging the female connector on the instrument and the male connector on the accessory. If one or both connectors are clogged, contact a Thermo Nicolet service representative to arrange repair service.
	The accessory isn't seated properly on the Antaris integrating sphere.	Remove the Sample Cup Spinner accessory, review the instructions in "Installing the Sample Cup Spinner" and then attempt to install the accessory again. If you still cannot close the latch, contact Thermo Nicolet.
Spectra you collect with the Sample Cup Spinner have a low signal-to-noise ratio or the ratio fluctuates between high and low.	The sample cup window is dirty or damaged.	Clean the sample cup. See "Cleaning the sample cup" in this guide for instructions. If the sample cup quartz window is chipped or scratched or the window is cloudy, contact Thermo Nicolet to order a new sample cup.
	The Antaris integrating sphere window is dirty or damaged.	Clean the integrating sphere window and then inspect its condition. See the "Integrating Sphere Sampling Module" chapter in the "Antaris Sampling" section of your Antaris User's Guide for cleaning instructions. If the window is damaged, contact Thermo Nicolet.
The sample cup does not rotate.	Debris is interfering with the cup movement.	Remove the sample cup and the Sample Cup Spinner accessory and check that the Antaris integrating sphere window is clean and clear of debris. Reinstall the accessory and sample cup and then restart your workflow.
	The Sample Cup Spinner is installed incorrectly.	Make sure the Sample Cup Spinner electrical connector is firmly seated in the female connector on the Antaris instrument and the connectors are free of debris. See "Installing the Sample Cup Spinner" for details.

Problem	Possible Causes	Suggestions
	The Sample Cup Spinner drop down list box isn't set correctly.	Display the workflow in Result Integration software, select the Collect event for the Sample Cup Spinner and then display the associated sample specification. Make sure the Sample Cup Spinner list box is set correctly.
The sample cup does not rotate (continued).		The options include: - **None**. No rotation - **Spin Sample Cup**: Rotates cup during sample collection - **Spin Sample And Verify Rotation**: Rotates cup during sample collection and checks for errors.
	The drive wheel o-ring is loose or damaged, or the o-ring is missing.	Contact Thermo Nicolet to order a new o-ring. Then follow the "Replacing the drive wheel o-ring" instructions in this guide. **Important**: Before installing or removing a sample cup, make sure you pivot the motor arm out of the way to avoid damaging the o-ring.

269-237000, Rev A

Thermo
SCIENTIFIC