Forma Scientific, Inc.
P.O. Box 649
Marietta, Ohio 45750
U.S.A.

Telephone: (740) 373-4763
Telefax: (740) 373-4189

Model: 3920

29 cu. ft. Capacity Reach-In Incubator

Manual No. 7033920 **Rev. 1**

Read This Instruction Manual

Failure to read, understand and follow the instructions in this manual may result in damage to the unit, injury to operating personnel and poor equipment performance.

Caution: All internal adjustments and maintenance must be performed by qualified service personnel.

Refer to the serial tag on the rear cover of this manual

The material in this manual is for information purposes only. The contents and the product it describes are subject to change without notice. Forma Scientific, Inc. makes no representations or warranties with respect to this manual. In no event shall Forma Scientific, Inc. be held liable for any damages, direct or incidental, arising out of or related to the use of this manual.

.MANUAL NO. 7033920

1	IN-2309	9/12/97	New temp and RH sensor heg
	n/a	6/12/97	Revise Manual 7033920, for job 26610 deg
REV	ECN	DATE	DESCRIPTION

General Safety Notes used in this Manual

	Important operating and/or maintenance instructions. Read the accompanying text carefully. Ce symbole attire l'attention de l'utilisateur sur des instructions importantes de fonctionnement et/ou d'entretien. Il peut être utilisé seul ou avec d'autres symboles de sécurité. Lire attentivement le texte d'accompagnement. Wichtige Betriebs- und/oder Wartungshinweise. Lesen Sie den nachfolgenden Text sorgfältig. Importante instruccions de operacion y/o mantenimiento. Lea el texto acompanante cuidadosamente.

	Potential electrical hazards. Only qualified persons should perform procedures associated with this symbol. Ce symbole attire l'attention de l'utilisateur sur des risques électriques potentiels. Seules des personnes qualifiées doivent appliquer les instructions et les procédures associées à ce symbole. Gefahr von Stromschlägen. Nur qualifizierte Personen sollten die Tätigkeiten ausführen, die mit diesem Symbol bezeichnet sind. Potencial de riesgos electricos. Solo personas das capacitadadas deben ejecutar los procedimientos asociadas con este simbulo.

	Equipment being maintained or serviced must be turned off and locked off to prevent possible injury. Risques potentiels liés à l'énergie. L'équipement en entretien ou en maintenance doit être éteint et mis sous clé pour éviter des blessures possibles. Geräte, an denen Wartungs- oder Servicearbeiten durchgeführt werden, müssen abgeschaltet und abgeschlossen werden, um Verletzungen zu vermeiden. El equipo recibiendo servicio o mantenimiento debe ser apagado y segurado para prevenir danos.

	Hot surface(s) present which may cause burns to unprotected skin or to materials which may be damaged by elevated temperatures Présence de surface(s) chaude(s) pouvant causer des brûlures sur la peau non protégée, ou sur des matières pouvant être endommagées par des températures élevées. Heiße Oberfläche(n) können ungeschützter Haut Verbrennungen zufügen oder Schäden an Materialien verursachen, die nicht hitzebeständig sind. Superficias calientes que pueden causar quemaduras a piel sin proteccion o a materiales que pueden estar danados por elevadas temperaturas.

- √ Always use the proper protective equipment (clothing, gloves, goggles etc.).
- √ Always dissipate extreme cold or heat and wear protective clothing.
- √ Always follow good hygiene practices.
- √ Each individual is responsible for his or her own safety.

Do You Need Information or Assistance on Forma Scientific Products?

If you do, please contact us 8:00 a.m. to 7:00 p.m. (Eastern Time) at:

1-740-373-4763	Direct
1-800-848-3080	Toll Free, U.S. and Canada
1-740-373-4189	FAX
http://www.forma.com	Internet Worldwide Web Home Page

Forma's **Sales Group** can provide information on pricing and give you quotations. We can take your order and provide delivery information on major equipment items or make arrangements to have your local sales representative contact you. Our products are listed on the Internet and we can be contacted through our Internet home page.

The Forma **Product Service Group** can supply technical information about proper setup, operation or troubleshooting of your equipment. We can fill your needs for spare or replacement parts or provide you with on-site service. We can also provide you with a quotation on our Extended Maintenance Program for your Forma products.

Whatever Forma products you need or use, we will be happy to discuss your applications. If you are experiencing technical problems, working together, we will help you locate the problem and, chances are, correct it yourself...over the telephone without a service call.

When more extensive service is necessary, we will assist you with the selection of a field service organization for on-the-spot repairs by a professional field technician. If your service need is covered by the Forma warranty, we will arrange for the unit to be repaired at our expense and to your satisfaction.

Regardless of your needs, Forma's professional telephone technicians are available to assist you Monday through Friday from 8:00 a.m. to 7:00 p.m. Eastern Time. Please contact us by telephone or fax. If you wish to write, our mailing address is:

Forma Scientific, Inc.
PO Box 649
Marietta, OH 45750

International customers please contact your local Forma Scientific distributor.

Table of Contents

SECTION 1 - RECEIVING

1.1 Preliminary Inspection 1-1
1.2 Visible Loss or Damage 1-1
1.3 Responsibility for Shipping Damage 1-1

SECTION 2 - INSTALLATION AND START-UP

2.1 Location 2-1
2.2 Attaching the Drain Lines 2-1
2.3 RS-232 Output Interface and Remote Alarm Connector 2-2
2.4 Power Connection 2-2
2.5 Start-Up Procedure 2-3
2.6 Setting the Overtemp Safety Thermostat 2-3
2.7 Setting the Undertemp Safety Thermostat 2-4
2.8 Preparing the optional Cobex Recorder 2-4
a. Changing the Chart Paper and the Pen 2-5
b. Changing the Pen 2-5
c. Calibrating the chart recorder 2-5
2.9 Controller Configuration 2-6
Temperature Configuration 2-7

SECTION 3 - CONTROL PANEL OPERATION

3.1 The 3920 Control Panel 3-1
- Main Power Switch and Indicator Light 3-1
- Refrigeration Switch and Indicator Light 3-1
- Defrost Switch and Indicator Light 3-2

- Overtemp Safety Control, Indicator Light and Audible Alarm 3-2
- Undertemp Safety Control, Indicator Light and Audible Alarm 3-2

3.2 Setting the Incubator's Operating Temperature 3-3

3.3 Programming the Controller 3-3

- Removing the mechanical lockout 3-4
- Removing the Software Lockout 3-4

SECTION 4 - ROUTINE MAINTENANCE

4.1 Cleaning the Incubator 4-1

SECTION 5 - SERVICE

5.1 Access to Electrical Components 5-1

5.2 Replacing the Overtemp/Undertemp Probe and Thermostat 5-1

5.3 Replacing the Temperature Sensor 5-2

5.4 Removing the Top Section 5-4

5.5 Setting the Door Heater Control 5-5

SECTION 6 - SPECIFICATIONS

SECTION 7 - SPARE PARTS LISTS

SECTION 8 - SCHEMATICS

SECTION 9 - WARRANTY INFORMATION AND SUPPLEMENTS

SECTION 1 - RECEIVING

1.1 Preliminary Inspection

This item was thoroughly inspected and carefully packed prior to shipment and all necessary precautions were taken to ensure safe arrival of the merchandise at its destination. Immediately upon receipt, before the unit is moved from the receiving area, carefully examine the shipment for loss or damage. Unpack the shipment and inspect both interior and exterior for any in-transit damage.

1.2 Visible Loss or Damage

If any loss or damage is discovered, note any discrepancies on the delivery receipt. Failure to adequately describe such evidence of loss or damage may result in the carrier refusing to honor a damage claim. Immediately call the delivering carrier and request that their representative perform an inspection. Do not discard any of the packing material and under no circumstances move the shipment from the receiving area.

1.3 Responsibility for Shipping Damage

For products shipped F.O.B. Marietta, Ohio, the responsibility of Forma Scientific, Inc. ends when the merchandise is loaded onto the carrier's vehicle.

On F.O.B. Destination shipments, Forma Scientific's and the carrier's responsibility ends when your Receiving Department personnel sign a free and clear delivery receipt.

Whenever possible, Forma Scientific, Inc. will assist in settling claims for loss or in-transit damage.

SECTION 2 - INSTALLATION AND START-UP

2.1 Location

Locate the unit on a firm, level surface in an area of minimum ambient temperature fluctuation. A minimum of 12 inches clearance is required at the top of the incubator and a minimum of 3 inches clearance is required at the rear of the incubator to facilitate adequate air flow around the refrigeration system.

2.2 Attaching the Drain Connections

The cabinet's 3/8" MPT drain line connection is located on the rear (lower left side) of the cabinet. A P-trap (Figure 2-1) is included with the unit and must be installed on the connection. To install the drain connection:

1. Using Teflon pipe thread tape, tape the threads on the cabinet drain connection.

2. Using an open end adjustable wrench, install the P-trap onto the connection. Make sure that the trap is positioned *down*.

Push a piece of 3/8" ID tubing onto the trap and direct the tubing to a convenient drain. Install a hose clamp on the tubing, if desired.

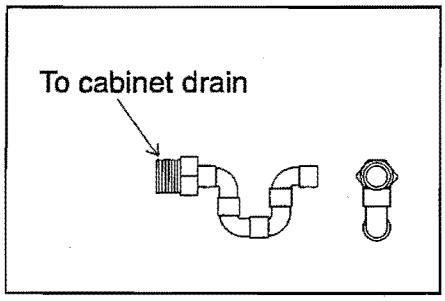

Figure 2-1
Cabinet drain p-trap

2.3 RS-232 Output Interface and Remote Alarm Connector

The Model 3920 is equipped with an RS-232 Serial Communication Interface for the remote transmission of temperature data. The remote alarm connections are also included on the terminal strip.

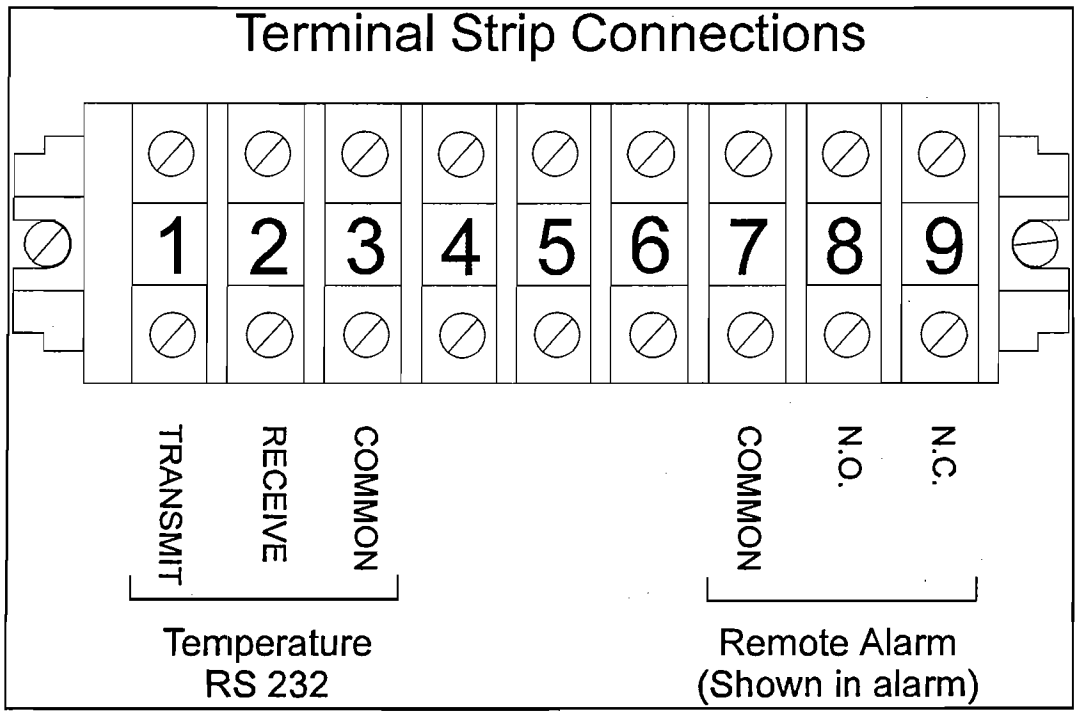

Figure 2-2

Terminal Pin Descriptions, RS-232 (1-6) and Remote Alarm Connections (7-9)

IMPORTANT USER INFORMATION

Caution! Stored product should be protected by an activated alarm system capable of initiating a timely response 24 hours/day. Forma Alarms provide interconnect for centralized monitoring.

b. Remote Alarm Contacts

Remote alarm connections are also included on the terminal strip (Figure 2-2) providing Normally Open (N.O.) and Normally Closed (N.C.) contacts. C is the Common terminal. The remote alarm will activate when either the incubator's temperature or humidity go out of the set alarm limits.

2.4 Power Connection

The electrical junction box is located on the rear top section of the incubator. With the junction box switch OFF, connect the incubator to an adequate power source. See the electrical data plate mounted on the unit or the electrical schematics in the back of this manual.

2.5 Start-Up Procedure

Preset the controls as follows:

Overtemp Safety Thermostat..... (Fully Clockwise)
Undertemp Safety Thermostat..... (Fully Counterclockwise)
Main Power Switch.....ON
Temperature Controller.....Desired Setpoint
Door Heater.....40% (factory set)

Turn the main power switch on. The Power indicator and Heat indicator will light. Turn the Refrigeration switch on and the indicator will light.

The compressor and refrigeration lights will not come on if the chamber temperature is within ±4°C of the temperature controller.

2.6 Setting the Overtemp Safety Thermostat

Allow the chamber temperature to stabilize then set the overtemp safety thermostat as follows:

1. Turn the overtemp control knob slowly counterclockwise until the audible alarm sounds and the overtemp indicator lights.

2. Turn the overtemp control knob clockwise approximately two units on the scale. The alarm should be silenced and the overtemp indicator light should go out.

The overtemp safety thermostat is now set a few degrees above the control temperature setpoint. When the chamber temperature rises to the overtemp control point, the alarm system will activate, power to the heaters will shut off, and the chamber temperature will be maintained at the overtemp control point.

When an overtemp condition occurs, the cause must be determined and corrected before normal operation under the main temperature controller can be resumed.

Note: When the chamber temperature control setpoint is changed, the overtemp safety thermostat must be reset to accommodate the change.

2.7 Setting the Undertemp Safety Thermostat

Allow the chamber temperature to stabilize then set the undertemp safety thermostat as follows:

1. Turn the undertemp control knob slowly clockwise until the audible alarm sounds and the undertemp indicator lights.

2. Turn the undertemp control knob counterclockwise approximately two units on the scale. The alarm should be silenced and the undertemp indicator light should go out.

The undertemp safety thermostat is now set a few degrees below the control temperature setpoint. When the chamber temperature drops to the undertemp control point, the alarm system will activate, power to the compressor will shut off, and the chamber temperature will be maintained at the undertemp control point.

When an undertemp condition occurs, the cause must be determined and corrected before normal operation under the main temperature controller can be resumed.

Note: When the chamber temperature control setpoint is changed, the undertemp safety thermostat must be reset to accommodate the change.

2.8 Preparing the (optional) CoBex Recorder

a. Installing the battery

The seven-day circular chart recorder is located on the front of the incubator cabinet and is protected by a glass door.

To prepare the recorder for operation, open the glass door and snap the connector onto the 9-volt battery as shown in Figure 2-3. If the unit is operating, the green LED lights steady. If the unit is not turned on, the LED blinks.

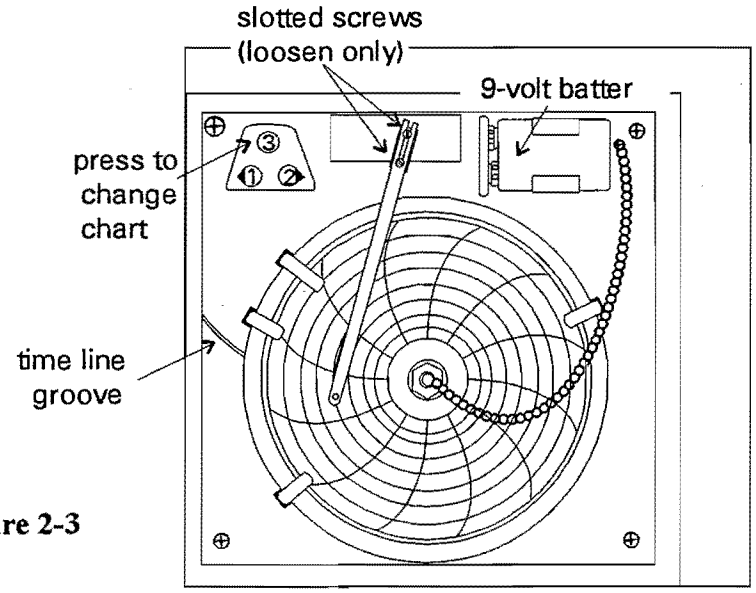

Figure 2-3

If the battery is weak or not connected, the green LED will flash. If power is lost to the cabinet, the LED will also flash. When replacing the 9-volt battery, use only an alkaline style battery. Dispose of the old battery following established environmental practices.

b. Changing the Chart Paper

- Press the Change Chart button (#3) and hold it for 1 second until the pen begins to move to the left of the chart. See Figure 2-3.
- Remove the existing chart by unscrewing the center knob securing it.
- Install the new chart, positioning it so that the correct time line coincides with the time line groove on the chart plate.
- Replace the center knob and screw it tightly against the chart.

c. Changing the Pen

- Using a small flat blade screwdriver, loosen the 2 screws holding the pen arm and remove the pen and arm as an assembly.
- Unsnap the plastic hinge securing the pen. Remove and discard the old pen.
- Install the new pen by snapping the hinge securely around the pen arm.

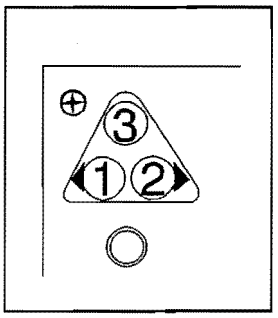

Figure 2-4

- Re-install the pen assembly by sliding the pen arm under the screws, positioning the pen tip in the time line groove. Tighten the screws.
- Push the Chart Change button and hold it for 1 second until the pen begins to move back onto the chart.

Note: Make sure that the pen is marking on the chart. It may be necessary to gently lift the pen onto the chart paper.

d. Calibrating the chart recorder

- Place an accurate thermometer(s) in the chamber next to the recorder's probe(s). After about three minutes, compare the thermometer with the chart recorder. For 2 pen operations, also compare the second thermometer.

Note: For 2 pen operations, first select the pen you wish to calibrate. Hold down the #1 arrow for the red (#1) pen or the #2 arrow for the blue (#2) pen, until the light goes out. Refer to Figure 2-4. Then adjust as necessary.

If an adjustment is necessary, press either the #1 or #2 button to move the pen left or right. The button must be held about five seconds before the pen begins to move. Release the button when the pen matches the thermometer.

2.9 Controller Configuration

The controller has been pre-configured at the factory. Reference copies of the Configuration records are included on the following pages.

The controller should not be re-configured without first consulting Forma Scientific, Inc., Service Department at 1-800-848-3080.

Temperature Configuration

3940 (WATLOW 982) CONFIGURATION RECORD

Customer: _____

Job Number: _____

Unit Serial Number: _____

Control Type: Temperature

Prepared By: _____

Completed By: _____

Switch Configuration:

Main Boards

SW1	ON
SW2	ON

(This switch should remain in the OFF position until factory testing has been completed.)

Output 2 Option Board

SW1	NA
SW2	NA

Output 3 Option Board

SW1	NA
SW2	NA

Output 4 Option Board

SW1	NA
SW2	NA

Input 1 Board

SW1	OFF
SW2	OFF
SW3	ON

Input 2 Board

SW1	NA
SW2	NA
SW3	NA

Software Configuration:

Operations Menus

SYS:	Ei1S	NA	Ent4	NA	A3LO	NA	A4Hi	NA
	Ei2S	NA	A2LO	NA	A3Hi	NA	Aut	OFF
	Ent3	OFF	A2Hi	NA	A4LO	NA		
PID:	Pb1	2.0	dE1	NA	It2	NA	dB	0.0
	rE1	0.50	Ct1	5	rA2	0.25		
	It1	NA	Pb2	1.0	dE2	NA		
	rA1	0.19	rE2	0.25	Ct2	30		

PROG: See Programming Sheets if required.

Setup Menus

InPt:	In1	Rtd	CAL1		rL2	NA	CAL2	NA
	dEC1	0.0	rtd1	din	rH2	NA	Hunt	NA
	rL1	-100.0	Ftr1	2	LrnL	NA		
	rHi	100.0	In2	NA	LrnH	NA		
OtPt:	Ot1	Ht	AL2	NA	LAt3	nLA	SIL4	NA
	PrC1	NA	LAt2	NA	SIL3	ON	Aout	NA
	HyS1	0.1	SIL2	NA	Ot4	NA	PrC3	NA
	Ot2	CL	Ot3	AL3	AL4	NA	ArL	NA
	PrC2	NA	AL3	Pr1	HyS4	NA	ArH	NA
	HyS2	0.1	HyS3	0.1	LAt4	NA	ACAL	NA
gLbL:	C_F	C	Anun	ON	PtyP	ti	PStr	StPt
	Err	nLA	LoP	-100	gSd	0	LOC	2 *
	Ei1	NO	HiP	100	POut	Cont		
	Ei2	NA	AtSP	90	IdSP	NA		

* LOC should be set at 0 until factory testing and calibration is complete.

** This is a calibration factor and will vary from unit to unit.

COM:	bAUd	9600	dAtA	7o	PrOt	FULL	Addr	0
	IntF	NA						

SECTION 3 - CONTROL PANEL OPERATION

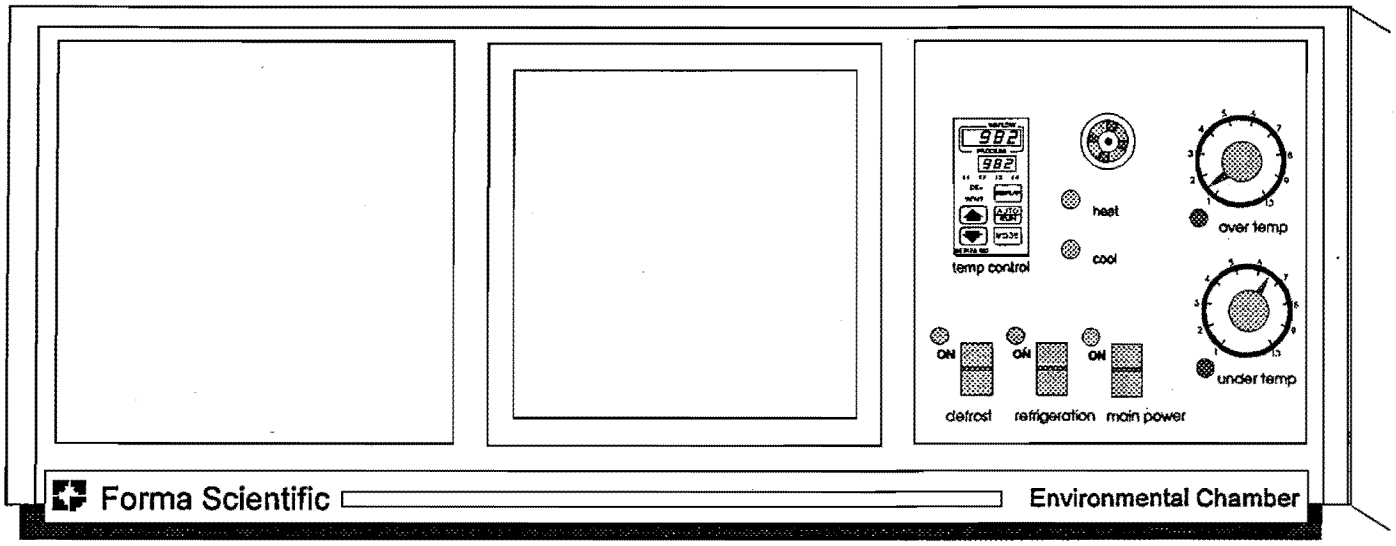

Figure 3-1
Model 3920 Control panel

3.1 The 3920 Control Panel

Main Power Switch and Indicator Light (Figure 3-2)

(A) The main power switch controls power to the incubator. The main power indicator lights when the power switch is on and the unit is receiving power.

Refrigeration Switch and Indicator Light (Figure 3-2)

(B) The refrigeration switch controls power to the refrigeration system. The refrigeration indicator lights when the refrigeration switch is on and the compressor is receiving power.

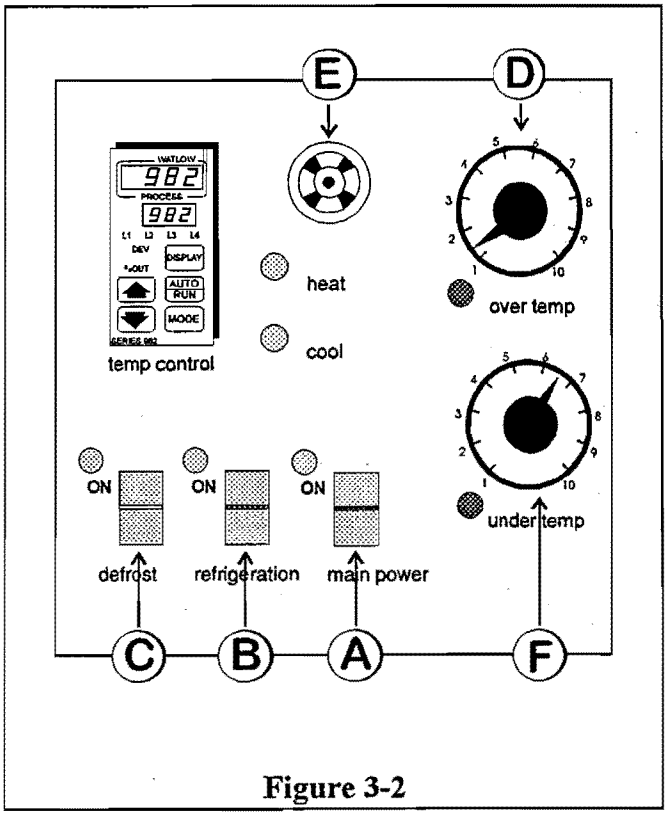

Figure 3-2

Defrost Switch and Indicator Light (Figure 3-2)

C The defrost switch controls power to the defrost system. The defrost timer is factory set to provide two 15-minute defrost cycles during a twenty-four hour period. The defrost indicator lights when the defrost switch is on and the incubator is in a defrost cycle.

The defrost switch must be turned on when the temperature setpoint is 10°C, or below.

Overtemp Safety Control, Indicator Light, and Audible Alarm (Figure 3-2)

D The overtemp safety thermostat should be set slightly above the operating temperature of the incubator. In the event of an overtemp condition, the overtemp safety thermostat will:

- Activate the audible alarm and the overtemp indicator light.
- Interrupt power to the heaters and maintain the incubator's cabinet temperature at the overtemp safety control point.

Note: The overtemp control is not directly calibrated. The numbers (0 to 10) on the dial are *for reference only* and do not correspond to any specific temperature.

If an overtemp condition occurs, the alarm can only be silenced by raising the overtemp safety thermostat setting. However, the cause of the problem must be determined and corrected before normal operation under the main temperature controller is resumed.

Undertemp Safety Control, Indicator Light and Audible Alarm (Figure 3-2)

E F The undertemp safety thermostat should be set slightly lower than the operating temperature of the incubator. In the event of an undertemp condition, the undertemp safety thermostat will:

- Activate the audible alarm and the undertemp indicator light.
- Interrupt power to the refrigeration system and maintain the incubator's cabinet temperature at the undertemp safety control point.

Note: As with the overtemp safety control, the undertemp control is not directly calibrated. The numbers (0 to 10) on the dial are *for reference only* and do not correspond to any specific temperature.

If an undertemp condition occurs, the alarm can only be silenced by lowering the undertemp safety thermostat setting. However, the cause of the problem must be determined and corrected before normal operation under the main temperature controller is resumed.

3.2 Setting the Incubator's Operating Temperature (Figure 3-3)

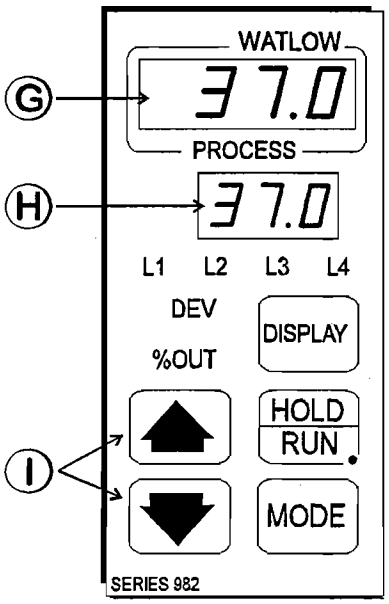

Figure 3-3

G H The Watlow temperature controller's upper numerical display shows the actual temperature inside the incubator chamber. The lower display shows the temperature setpoint.

I To raise or lower the setpoint, press the up or down arrow. Temperatures are set in .1°C increments.

3.3 Programming the controller

The Watlow temperature controller have been set at the factory to operate the incubator within the specifications listed in Section 6 of this manual. Reference copies of the Watlow configuration records are included at the end of Section 2 of this manual.

To prevent tampering, mechanical and software lockouts are employed in the system. These lockouts must only be removed by persons skilled in configuring controller software.

Making program changes to the temperature controller will seriously alter the performance of the incubator and therefore must be made only by qualified persons. The controller should not be re-configured without first consulting Forma Scientific, Inc., Service Department, at 1-800-848-3080.

a. Removing the mechanical lockout

Make sure the unit is turned off.

Wearing a grounding wrist strap or maintaining constant contact with the metal cabinet, press in the four locking tabs on the frame of the Temperature controller. There are two tabs on either side as shown in the front and side views in Figure 3-4. When all tabs are unlocked, pull the controller module out of its frame.

Looking at the top of the module, locate the red DIP switch indicated in Figure 3-5. With a fingernail or small screwdriver, turn off SW #2 by moving the white toggle down or towards the front of the module.

Very carefully, replace the module into its frame and press firmly on the top and bottom of the bezel until all four locking tabs "click" into place.

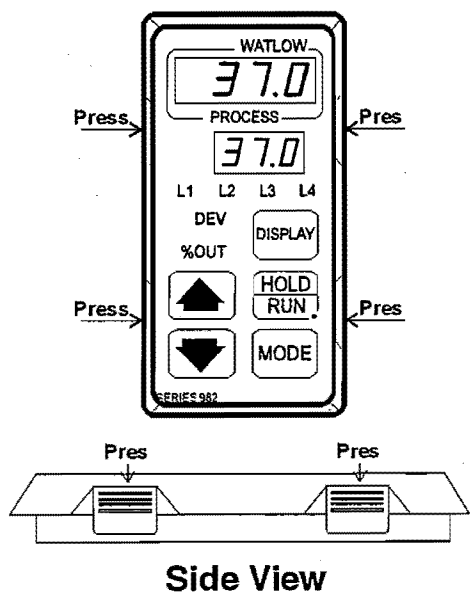

Figure 3-4

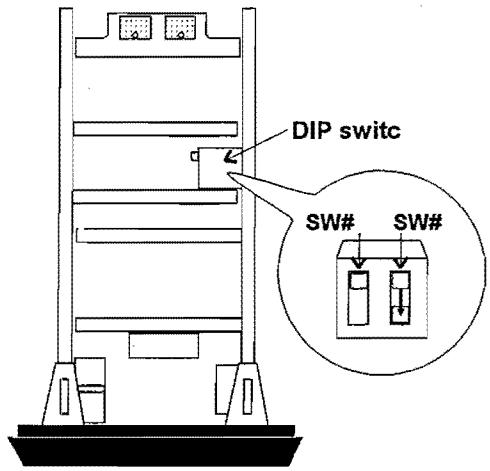

Figure 3-5

b. Removing the Software Lockout

Press the up arrow and down arrow keys at the same time and hold them for about three seconds. The words "inpt" (input) and "set" will appear in the top and bottom displays. (Figure 3-6) If numbers in the bottom display begin to scroll up or down, the keys have not been pressed simultaneously. Try again.

Press the up arrow until "gLbL" (global) appears in the upper display. The word "set" will remain in the lower display. (Refer to Figure 3-7)

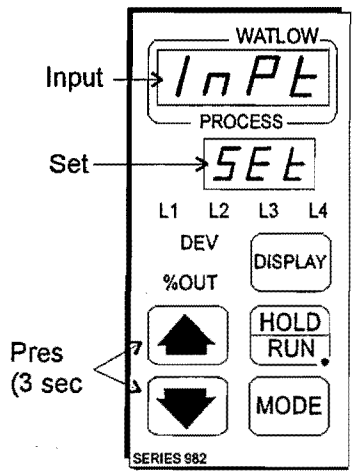

Figure 3-6

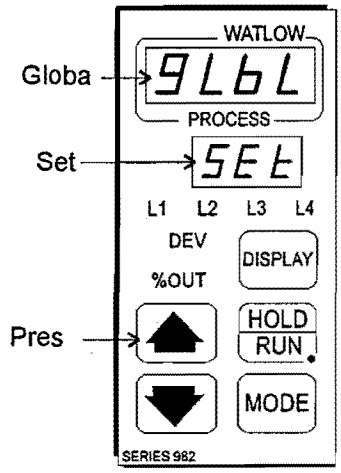

Figure 3-7

Press the Mode key to scroll through the menus until the upper and lower displays show "2 Loc" (Figure 3-8) Press the down arrow key until the 2 becomes 0 (zero) as shown in Figure 3-9.

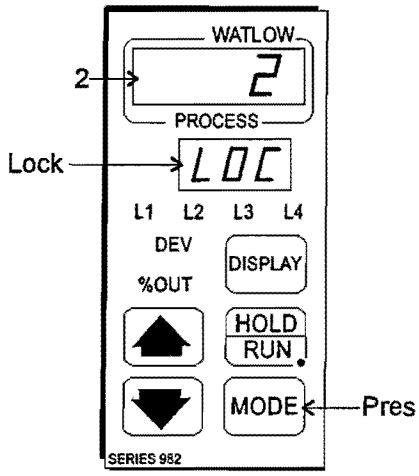

Figure 3-8

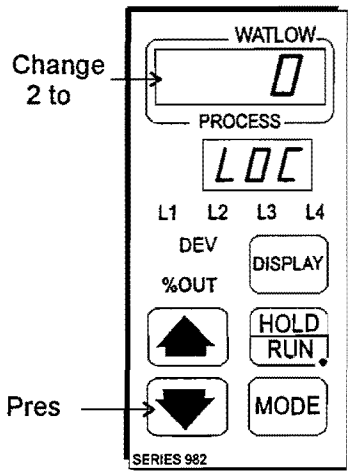

Figure 3-9

Press the Display key to return to showing the setpoint and actual temperatures. ***All safeguards are now removed and the controller may be programmed.*** Refer to the Watlow publications included with this operating manual.

Reprogramming the temperature or humidity controllers will change the factory default settings and may seriously alter the performance of the incubator and void the warranty. Contact the Forma Scientific, Inc., Service Department, at 1-800-848-3080.

SECTION 4 - ROUTINE MAINTENANCE

4.1 Cleaning the Incubator

De-energize all potential sources of energy to this unit and lockout/tagout their controls. (O.S.H.A. Regulation, Section 1910-147.)

The continued cleanliness of the stainless steel used in Forma products has a direct effect on the appearance and operation of the unit. Use the mildest cleaning procedure that will do the job effectively. Clean the outside of the incubator with soap and water or with any non-abrasive commercial spray cleaner. Clean the inside of the chamber with alcohol and/or soap and water. Disinfect the interior panels with a general use laboratory disinfectant, diluted according to the manufacturer's instructions. Rinse the surface thoroughly after each cleaning and wipe the surfaces dry. Always rub in the direction of the finish polish lines.

Caution: Do not use chlorinated solvents on stainless steel as they can cause rusting and pitting.

Caution: Do not use volatile or aromatic solvents for cleaning inside the cabinet as their residue can contaminate the cabinet environment.

The Thermopane glass door may be cleaned with commercial glass cleaner or with a solution of ammonia and water.

SECTION 5 - SERVICE

Servicing must be performed by qualified service personnel only!

5.1 Access to the Electrical Components

De-energize all potential sources of energy to this unit and lockout/tagout their controls. (O.S.H.A. Regulation, Section 1910-147.)

To gain access to the electrical components, open the control panel and grasp the left side of the control panel housing. Pull it gently, but firmly, up and out.

5.2 Replacing the Overtemp/Undertemp Probe and Thermostat

De-energize all potential sources of energy to this unit and lockout/tagout their controls. (O.S.H.A. Regulation, Section 1910-147.)

1. Remove the incubator ceiling by remove the screws holding it in place.
2. Remove the top three screws from the top of the right duct cover.
3. Lean the duct sheet out, and remove the permagum seal from around the probe access hole.
4. Remove the 15" copper capillary overtemp probe by extracting the two plastic clips that hold the probe in place.

5. Open the control panel.

6. Pull the overtemp probe up through the access hole and into the control panel.

7. Follow the wires from the probe to the thermostat mounted on the control panel. Clip the plastic ties holding the overtemp cable to the existing wiring.

8. Pull the overtemp knob on the control panel off.

9. Remove the two screws that hold the overtemp assembly to the control panel.

10. Disconnect the two wires from the back of the thermostat assembly.

11. Pull the entire assembly out of the panel, and remove the unit.

12. Replace the thermostat and probe.

Note: Reseal the probe access hole with permagum, and retie the overtemp cable to the existing wires after replacing the probe.

5.3 Replacing the Temperature Sensor

De-energize all potential sources of energy to this unit and lockout/tagout their controls. (O.S.H.A. Regulation, Section 1910-147.)

1. Locate the probe mounting plate in the center of the right side of the incubator interior.

2. Open the mounting plate by removing the screws that hold it in place.

3. Locate the sensor mounted on the inside of the panel in a black housing. Note the angle of the probe.

4. Grasp and unplug the probe from the probe cable.

5. When replacing the sensor, be sure to mount the probe at the same angle as it was originally mounted.

5.4 Removing the Top Section

De-energize all potential sources of energy to this unit and lockout/tagout their controls. (O.S.H.A. Regulation, Section 1910-147.)

If it becomes necessary to remove the top of the incubator when moving it through low doorways, use the following procedure:

- Read the instructions completely before starting the removal process.
- Provide adequate space and sufficient lighting to perform the work.
- Disconnect the inlet water supply and the drain.
- Before lifting the top section from the incubator, provide Carpenter's horses or another suitable support arrangement so that the underside of the top is suspended.

Procedure:

1. Remove all test material from the incubator chamber.
2. All temperature sensing probes are mounted on a probe mounting bracket on the right side of the incubator chamber. Remove the nuts securing the bracket and then remove the probes from the bracket. Note the location and configuration of the probes.
3. The sensing bulb capillaries are routed behind the duct sheet up to the access port at the top of the unit behind the control panel.

   Note: Route all the probes between the duct sheet and the outside wall of the chamber so that when the top is raised, all probes will move freely up and out. *Do not kink or bend the capillaries.*

4. Open the control panel (up to 90 degrees) by grasping the left side and pulling out until the catch releases.

5. Loosen the top gasket around each of the air exhaust vents by turning the screw.

6. Remove the eight screws from the top cover of the incubator.

7. Remove the four screws from each of the vent caps on the top cover of the incubator. The top cover can now be removed.

8. Remove the nine 5/16" x 4" hex head bolts, lock washers, and two flat washers which secure the top assembly to the cabinet. Note the washer arrangement on the bolts.

9. Remove the black trim gasket located at the junction of the top assembly and the main incubator section. The ends of the gasket have been joined together at the rear of the incubator.

   Note: When raising the top section, notice the gasket seal at the top opening of the incubator chamber. The gasket must be correctly positioned when reinstalling the top on the chamber.

10. *Slowly* lift the entire top assembly up and off the lower chamber section while *carefully* guiding the capillaries and sensing bulbs out of the chamber area. Place the top assembly onto the carpenter's horses or other support arrangement.

11. Reinstall the top assembly by reversing the above procedure. Exercise care particularly when:

    - Placing and aligning the sealer gasket on the 1/2" flange on top of the chamber when lowering the top in place.

    - Routing the temperature and/or humidity sensors and capillaries to prevent severely bending them.

    - Mounting the temperature and/or humidity sensor bulbs on the mounting brackets.

    - Tightening the top mounting bolts alternately, to ensure a balanced pressure on the gasket.

5.5 Setting the Door Heater Control

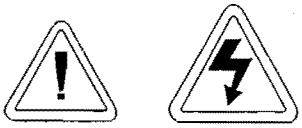

Warning:
High voltage is present behind control panel. Servicing must be performed only by qualified electrical service personnel.

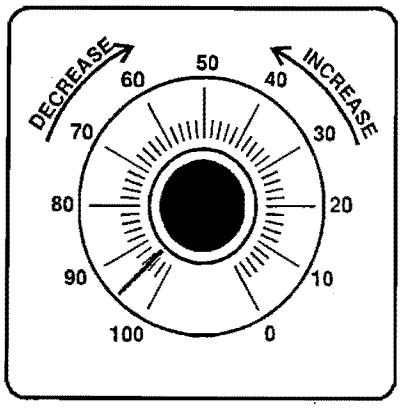

The infinite heater control is located in the right side of the incubator top compartment behind the control panel door. The heater varies the amount of door heat from no heat (zero) to full heat (100) as indicated by the control dial face. If the knob is turned past zero, a "click" will indicate that all power to the door is shut off. If turned past 100, a similar "click" will indicate that the heat is set at the maximum.

Initially the units leave the factory with the dial set at 40. If desired, the amount of heat can later be reduced until moisture appears on the door, then the heat advanced. However, in fluctuating ambient conditions, it is recommended that full door heat be used.

SECTION 6 - SPECIFICATIONS
Model 3920

Temperature

Control	±0.3°C @ +25°C to +37°C
Range	0°C (32°F) to +60°C (140°F)
Sensor	RTD
Controller	Digital electronic proportional
Setpoint	Digital
Display	Digital LED
Readability	0.1°C
Setability	0.1°C
Uniformity	±0.3°C at 25°C to 37°C with six shelves installed*

Shelves

Standard	6
Maximum	19
Dimensions	30.62"W x 25.81"F-B (77.78 cm x 65.56 cm)
Construction	Solid stainless steel reinforced
Surface Area	5.4 sq. ft. (.51 sq. m) per shelf
Max. Per Chamber	104.3 sq. ft. (9.69 sq. m)
Clearance	Adjustable on 3" (7.62 cm) centers
Loading	35 lbs. (16 Kg) (slide in and out) 50 lbs. (23 Kg) (stationary)

Construction

Volume	29 cu. ft. (823 liters)
Interior	304 2B stainless steel
Exterior	Cold rolled steel
Insulation	2" (5.1cm) Foamed urethane
Outer Door Gasket	Four sided vinyl compression
Finish	Powder coated. Salt spray tests exceed 1000 hrs. per ASTM Standard B117-85.

Weights

Net	700 lbs.
Shipping	
Motor	850 lbs.

Temperature Alarm

Sensor	Thermostat
Controller	Thermostat
Setpoint	Analog reference dial
Alarm	Audible/visual

Fittings

Drain Port	3/8" OD Copper

Unit Heat Load

115V	5500 BTUH (1600W)
220V	6000 BTUH (1750W)

Refrigeration

Compressor	1/4 Horsepower, air-cooled R-134A

Electrical

120V, 1 PH, 2W, 60HZ, 16 FLA

Power Switch	1 Pole
Line Cord	None (lockable disconnect provided)

Dimensions

Exterior	38.00"W x 87.50"H x 32.00"F-B (96.52 cm x 222.25 cm x 81.28 cm)
Interior	31.00"W x 60.00"H x 27.00"F-B (78.74 cm x 152.40 cm x 68.58 cm)

Continuing research and improvements may result in specification changes at any time. Performance plus or minus the least significant digit unless otherwise specified.

** Better than ±0.5°C uniformity at all other temperature parameters.*

SECTION 7 - PARTS LIST
Model 3920

Part No.	Description	Qty
290163	Sensor, RH/Temp Control	1
230066*	Fuse, Ceramic 10A 350V	1
290162	RH/Temp Control Signal Conditioner	1
400051	Power Supply	1
231186	Controller, Watlow 982 Auto Tune	1
320277	Triac, 25A	2
403940	Thermostat, B-10 0-220F (coated)	1
403941	Thermostat, B-20 10-220F (coated)	1
131300	Blower Wheel	1
275030	Defrost Timer	1
630090	Heater	2
205062	Condensing Unit, 1/4 HP 115V R-134A	1
991334	Solenoid, 120V .101" Port	1
285599	Thermal Fuse, 250V 17A	1
830044	Blower Motor, 1/4 HP, 115V	1

*Immediate Stock

SECTION 8 - SCHEMATICS

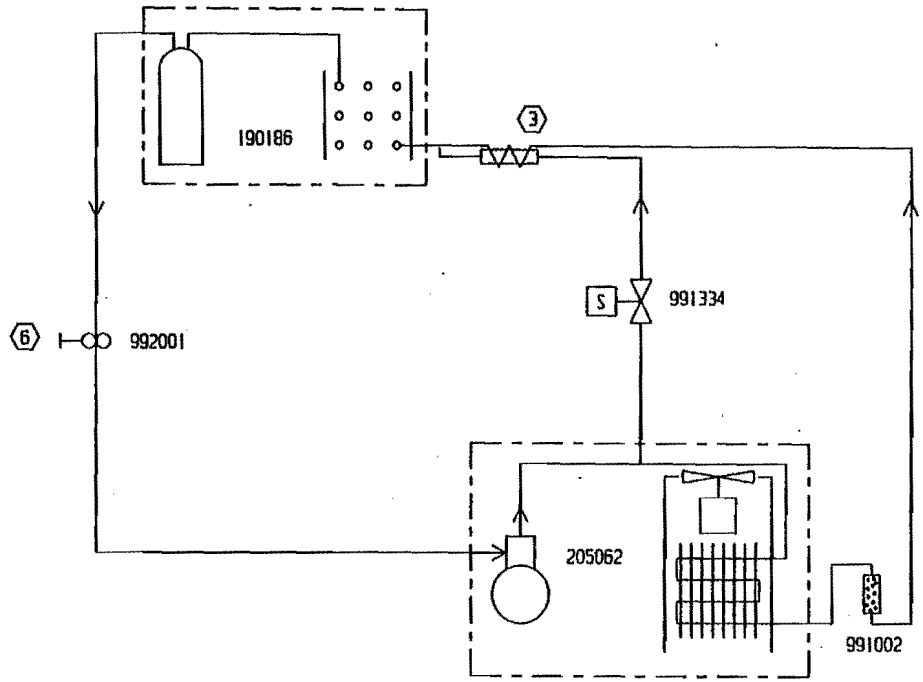

6. CAP TUBE ITEM (3) , 6' OF .050
5. WRAP 5' OF CAP TUBE TO 1/2" HOT GAS TUBE.
4. SUCTION LINE: 3/8" O.D.
3. HOT GAS LINE: 1/4" O.D.
2. SET CPR VALVE (6) AT 25 LBS.
1. REFRIGERANT 134A: 13.5 OZS.

CUSTOMER APPROVAL/REFERENCE
APPROVED BY
APPROVING FIRM
DATE OF APPROVAL

THIS DOCUMENT CONTAINS PROPRIETARY INFORMATION AND SUCH INFORMATION IS NOT TO BE DISCLOSED TO OTHERS FOR ANY PURPOSE NOR USED FOR MANUFACTURING PURPOSES WITHOUT WRITTEN PERMISSION FROM FORMA SCIENTIFIC

REV	ECN NO.	DATE	BY	CAD	APPD	DESCRIPTION OF REVISION
1	IN-1718	03-08-94	JHV	PDK		134A REFRIGERANT NON-CFC REVISION

DATE 01-25-93	DWN LOC	CAD LOC	APPD LDN	SCALE NONE
CUSTOMER				
JOB TITLE 190219 REFRIG. TOP HOUSING				
DWG TITLE REFRIGERATION SCHEMATIC				
LOCATION STKN0S01	JOB NUMBER	DRAWING NUMBER 190219-90-0-B		

Forma Scientific
BOX 649 MARIETTA, OHIO 45750 TELEX 24-5394
TOLL FREE USA 800-848-3080, OHIO 614-373-4763

190219\90-0-B LOC 1-25-93 CADKEY

POWER CONNECTION: 120V,1PH,2W,60HZ,16FLA

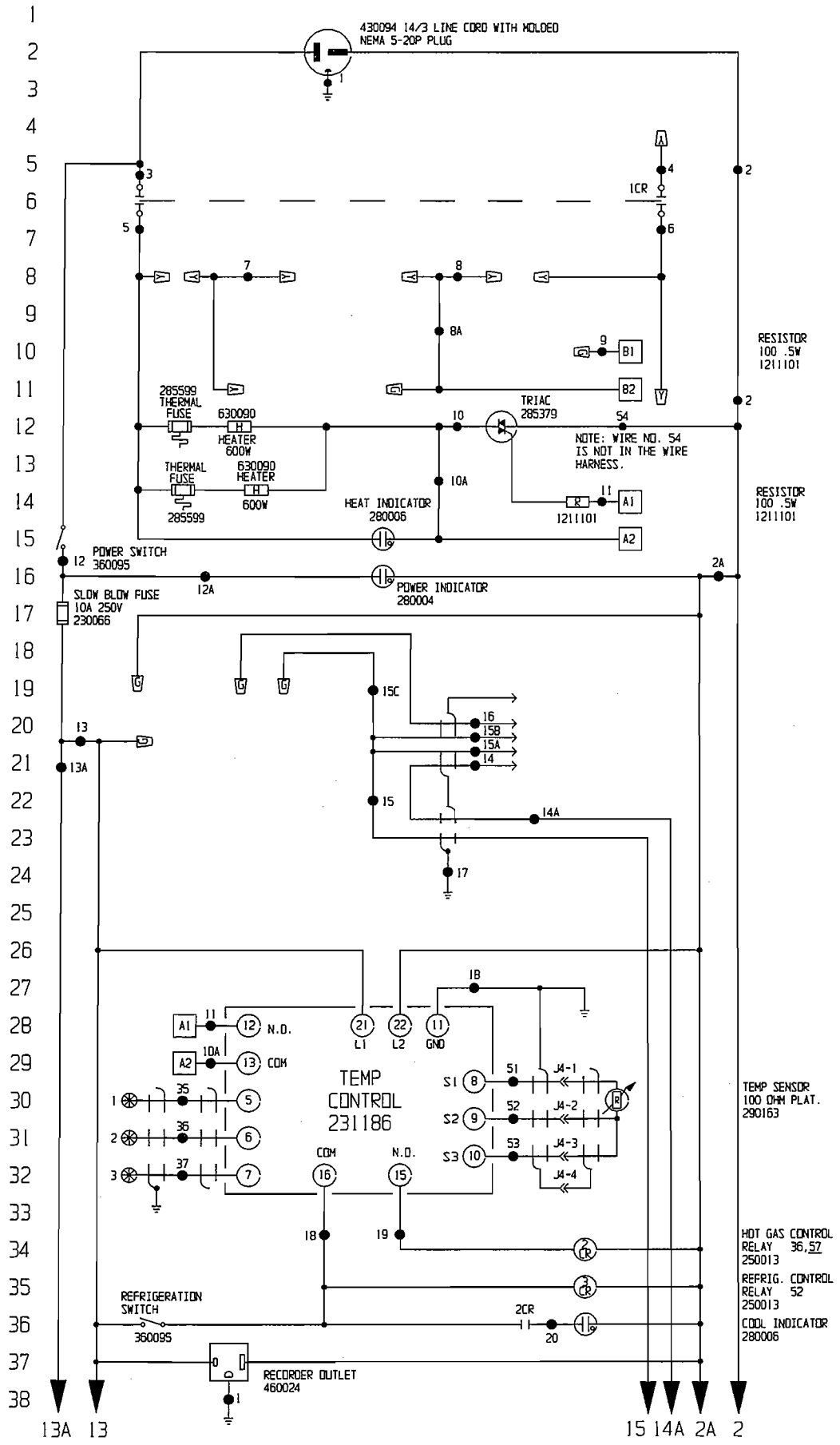

Electrical Schematic
Forma Model:
3920
Reach-In Incubator

3920-70-0-D Rev. 7
Page 1 of 3

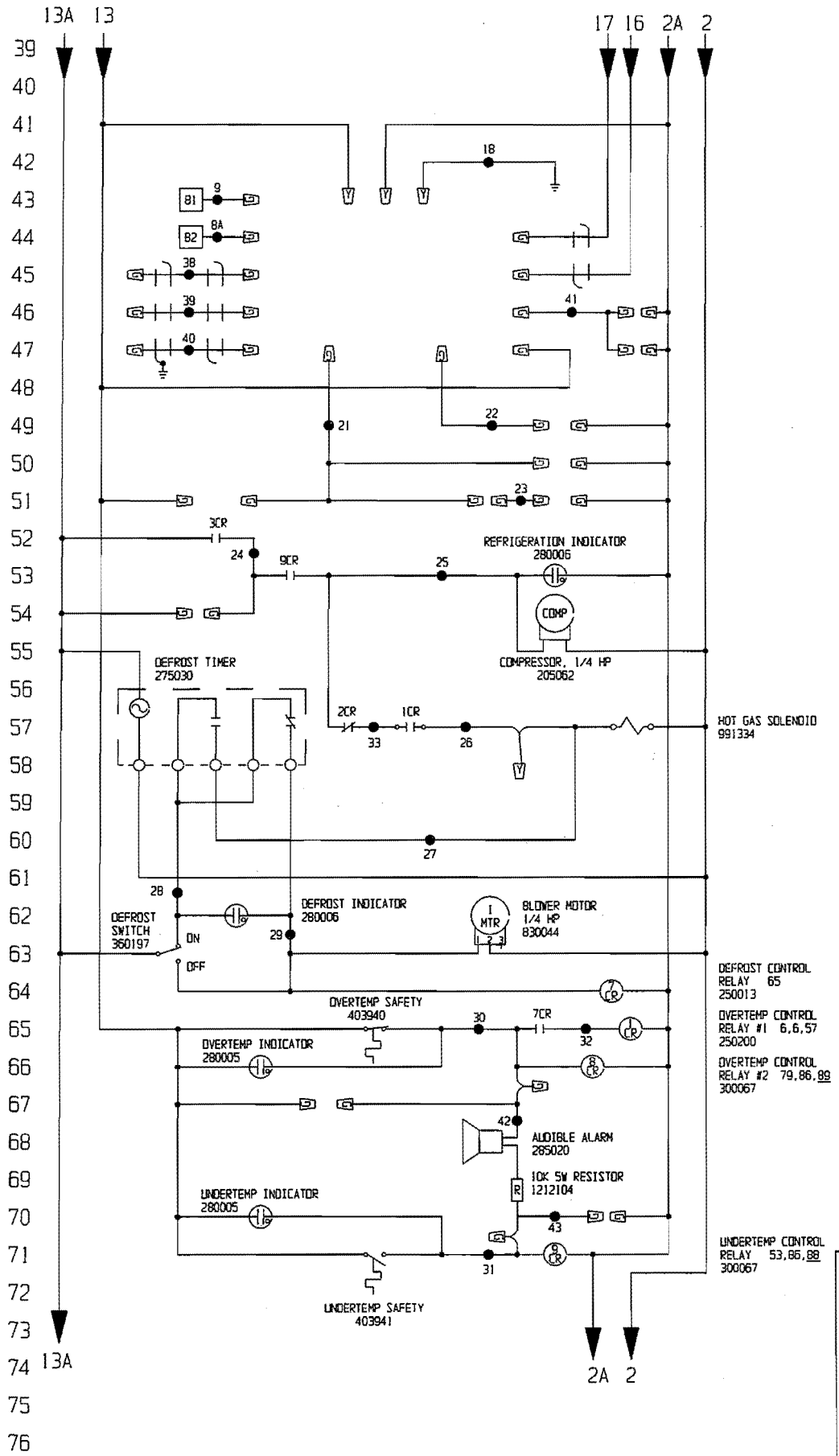

Electrical Schematic
Forma Model:
3920
Reach-In Incubator

3920-70-0-D Rev. 7
Page 2 of 3

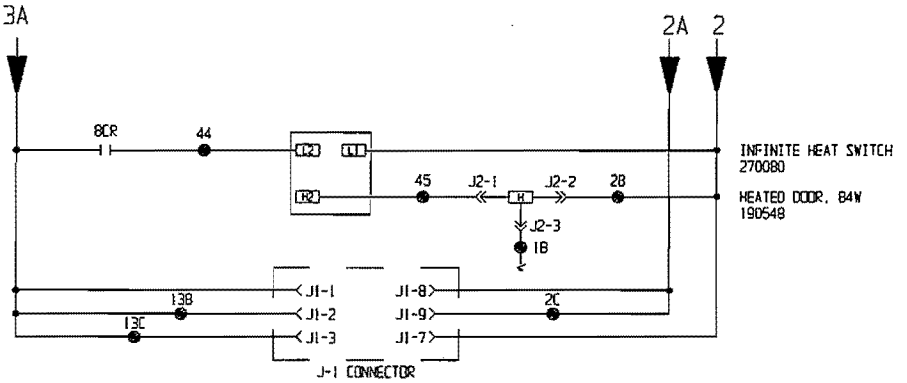

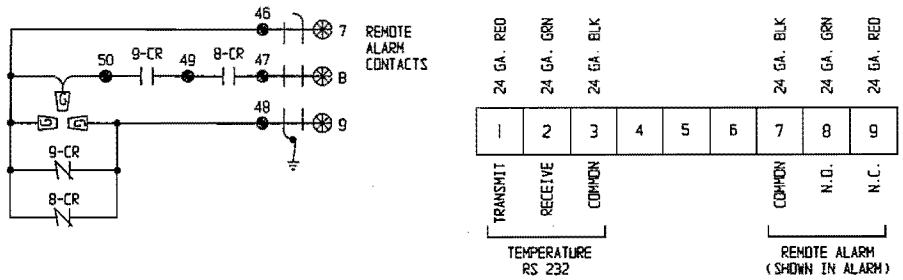

Terminal Strip Connection

WIRE CHART

WIRE NO.	GAUGE	COLOR
1	12	GRN\YEL
1A	N/A	N/A
1B	16	GRN\YEL
2	14	WHITE
2A	20	WHITE
2B	18	WHITE
2C	20	WHITE
3	12	BLACK
4	12	RED
5	16	BROWN
6	16	RED
7	16	ORANGE
8	16	BLUE
8A	20	BLUE
9	20	RED
10	16	PURPLE
10A	20	PURPLE
11	20	BLUE
12	16	YELLOW
12A	20	YELLOW
13	20	BROWN
13A	16	BROWN
13B	20	BROWN
13C	20	BROWN
14	22	RED
14A	22	RED
15	22	BLACK
15A	22	BLACK
15B	22	WHITE
15C	22	BLACK
16	22	GREEN
17	22	SHIELD
18	20	RED
19	20	ORANGE
20	20	PURPLE

WIRE NO.	GAUGE	COLOR
21	20	RED
22	20	ORANGE
23	20	YELLOW
24	16	BLUE
25	18	BLACK
26	16	BLUE
27	18	BLACK
28	18	RED
29	16	YELLOW
30	20	BLUE
31	20	ORANGE
32	20	PURPLE
33	16	BLUE
34	N/A	N/A
35	22	RED
36	22	GREEN
37	22	BLACK
38	22	RED
39	22	GREEN
40	22	BLACK
41	20	YELLOW
42	20	YELLOW
43	20	RED
44	18	RED
45	18	BLACK
46	24	BLACK
47	22	GREEN
48	22	RED
49	22	WHITE
50	22	WHITE
51	22	BLACK
52	22	WHITE
53	22	RED
54	16	WHITE

DENOTES AN EXTRA SMALL GRAY WIRE NUT (16038)

DENOTES A YELLOW WIRE NUT (16001)

NOTES:

⊛	Denotes Terminal Strip Connection		Parts List Reference Number
9-CR	Last Relay Number	○	Assembly
9	Last Terminal Number	⬠	Panel
54	Last Wire Number	⬡	Refrigeration
		□	Wiring

CUSTOMER APPROVAL/REFERENCE
APPROVED BY _____
APPROVING FIRM _____
DATE OF APPROVAL _____

THIS DOCUMENT CONTAINS PROPRIETARY INFORMATION AND SUCH INFORMATION IS NOT TO BE DISCLOSED TO OTHERS FOR ANY PURPOSE NOR USED FOR MANUFACTURING PURPOSES WITHOUT WRITTEN PERMISSION FROM FORMA SCIENTIFIC

CUSTOM PRODUCTS
SPECIALIZED ENVIRONMENTAL EQUIPMENT BY FORMA SCIENTIFIC

REV	ECN NO.	DATE	BY	CAD	APPD	DESCRIPTION OF REVISION
7	—	11/14/97	CSA	CSA	HEG	REV'D DUE TO 3940 CHANGE
6	—	11/14-96	TLC	TLC	AAL	1CR WAS 3CR
5	—	9/28/96	CSA	CSA	AAL	REV'D STANDARD 3940 CONTROLS
4	—	1/20/95	CSA	CSA	AAL	REV'D AMP SPECIFICATION
3	—	11/9/94	CSA	CSA	AAL	ADD PHENOLIC COATED T-STATS
2	—	5/4/94	CBG	CBG	AAL	REMOVED RESISTOR FROM HEAT INDIC.
1	—	3/21/94	CBG	CBG	AAL	CHANGED COMPRESSOR TO R134-A

DATE 12/17/93 | DWN CBG | CAD CBG | APPD AAL | SCALE NONE
CUSTOMER
JOB TITLE 3920 29CF INCUBATOR, 0°C TO 60°C
DWG TITLE ELECTRICAL SCHEMATIC
LOCATION INCUBATR | JOB NUMBER | DRAWING NUMBER 3920-70-0-D

Electrical Schematic
Forma Model:
3920
Reach-In Incubator

3920-70-0-D Rev. 7

SECTION 9 - WARRANTY INFORMATION AND SUPPLEMENTS

FORMA STANDARD PRODUCT WARRANTY

Dear Purchaser:

Good performance is what you expect when you buy products from Forma Scientific, Inc. We, too, are concerned about performance. That's why we offer the following One Year Protective Warranty:

The Warranty Period starts two weeks from the date your equipment is shipped from our factory. This allows for ample shipping time so that the warranty will go into effect at approximately the same time your equipment is delivered. This same protection extends to any subsequent owner during the warranty period.

During the one year warranty period, component parts proven to be defective in materials or workmanship will be repaired or replaced at our expense, labor included. Installation and calibration is not covered by this warranty agreement. The Forma Scientific, Inc. Service Department must be contacted for warranty determination and direction prior to any work being done.

Expendable items such as glass, filters, pilot lights, light bulbs, and door gaskets are excluded from this warranty coverage. Naturally, our warranty does not cover damage caused by accident, misuse, fire, flood, or acts of God.

Replacement or repair of component parts or equipment under this warranty shall not extend the warranty to either the equipment or to the component part beyond the original one year warranty period. The Forma Service Department must give prior approval for the return of any components or equipment.

THIS WARRANTY IS EXCLUSIVE AND IN LIEU OF ALL OTHER WARRANTIES, WHETHER WRITTEN, ORAL OR IMPLIED. NO WARRANTIES OF MERCHANTIBILITY OR FITNESS FOR A PARTICULAR PURPOSE SHALL APPLY. Forma Scientific, Inc. shall not be liable for any indirect or consequential damages including, without limitation, damages relating to lost profits or loss of products.

A word on installation and operation. We know you expect a proper installation. Your local Forma Sales Office is ready to help with comprehensive site preparation information before your equipment arrives. Printed instruction manuals carefully detail equipment installation, operation, and preventive maintenance.

And about equipment service? Let's face it. Even the best products need service. If this occurs, please call your Forma Service Office at 1-800-848-3080 in the USA. We're ready to answer your questions on equipment warranty, operation, maintenance, service and special applications.

We encourage you to keep this warranty explanation. You may never need it, but it's nice to know the protection is there.

Sincerely,

FORMA SCIENTIFIC, INC.

ISO 9001 REGISTERED

CONDITIONS AND TERMS OF SALE

SPECIFICATIONS AND MATERIAL CHANGES: Forma Scientific, Inc. reserves the right to offer our latest and improved models at time of shipment.

SHIPMENTS: All shipments are FOB Marietta, Ohio, freight prepaid and add. Unless Specific shipment instructions are provided, shipment will be made by the least expensive method.

PRICES: All prices are firm for the delivery period specified based on receipt of a purchase order within 30 days. Purchase Orders received after this time are subject to review and price adjustment. If, after acceptance of a Purchase Order the required delivery date is modified by the purchaser, Forma reserves the right to adjust the price to recover additional expenses incurred, due to increased labor or material cost (including mark-up), inventory expenses, and such like. In addition, Forma Scientific, Inc. will be entitled to invoice and receive payment for 90% of the value of labor and material expended.

TAXES: The prices quoted do not include any state, local or federal taxes.

PAYMENT: All payments are net 30 days from date of shipment. Order acceptance is subject to approval of our Credit Department.

CANCELLATION: Orders shall not be subject to cancellation unless cancellation charges are paid by the purchaser. Custom, non-catalog and modified units are not subject to cancellation under any condition.

DAMAGES OR SHORTAGES: Claims for shortages in shipment must be made within 5 working days of receipt of material. If the outer crate or carton is damaged in any way, purchaser should not sign the bill of lading until the carrier notes such damage on the bill of lading. Without this notation, carriers usually refuse purchaser damage claims. Unauthorized return of goods will be refused at Forma's dock. Authorized returned goods will be allowed at a 20% restocking charge plus whatever expenses are necessary to return material to first class, saleable condition. Custom fabricated or modified equipment is not subject to return under any condition.

DELIVERY: Delivery dates are approximate and based on production at time of quotation. Forma shall not be liable for damages to the purchaser for any default or delay in delivery for any reason. Every effort shall be made to meet the delivery quoted, but failure to meet the estimated delivery will not be considered cause for cancellation and/or claims which may arise from such delay.

LIMITATION OF LIABILITY: In no event, whether as a result of breach of contract, warranty or tort (including negligence and strict liability), shall Forma Scientific, Inc. be liable for any consequential or incidental damages including, but not limited to, loss of profit or revenues, loss of use of the equipment or any associated equipment, down-time costs, cost of substitute equipment, costs of labor, costs due to delays or claims of Purchaser's own customers for such damages. Purchaser agrees to indemnify Forma Scientific, Inc. and hold Forma Scientific, Inc. harmless from any and all liability, claims, demands, actions, suits, expenses or costs, including reasonable attorney's fees relating to such consequential or incidental damages.

The responsibility of Forma Scientific, Inc. for damages due to injuries, or death of employees of the Purchaser, or ultimate user of the equipment being serviced, caused by the equipment, shall be limited to that portion of such damages as might be attributed to the negligence or strict liability of Forma Scientific, Inc. The Purchaser and ultimate user agree to indemnify Forma Scientific, Inc. and hold Forma Scientific, Inc. harmless from any further damages, indemnity or contribution. All warranties, limitations of liability and indemnities provided herein will survive the termination of this agreement.

Forma Scientific's liability for any claim of any kind (including negligence and strict liability) for any loss or damage arising out of, or resulting from, this agreement or from the performance or breach thereof, or from the Services, Products or Parts furnished hereunder shall in no case exceed the price of the same giving rise to the claim.

INSTALLATION: Installation of all equipment shall be by, and at the expense of, the purchaser unless quoted herein. When installation is quoted, it is understood that elevator service will be made available to Forma Scientific, Inc. at no charge to move the equipment to specific locations. If elevator service is not available or if access to the specified location is not adequate, Forma Scientific, Inc. reserves the right to bill the purchaser for the additional cost of work required.

ACCEPTANCE: Orders, terms and specifications are subject to approval of Forma Scientific, Inc., Home Office. No variation shall be binding unless in writing signed by a Forma executive officer.

FORMA INTERNATIONAL DEALER WARRANTY

Dear Forma Representative:

Good performance is what you expect when you buy Forma Scientific products. We, too, are concerned about performance. That is why we offer the following One Year Protective Warranty:

The Warranty Period starts two months from the date your equipment is shipped from our factory. This allows for ample shipping time so that the warranty will go into effect at approximately the same time your equipment is delivered. This same protection extends to any subsequent owner during the warranty period. We have provided a means of delaying initiation of the warranty period for those dealers who stock our equipment. The warranty will go into effect upon the installation date when the warranty card has been completed and returned to the attention of the Forma Scientific Service Manager. This delayed warranty beginning is valid for a maximum of six months from the date of shipment from Forma. If no warranty card has been received by Forma within six months, the warranty period will begin two months from the date of shipment from our factory.

During the one year warranty period all component parts proven to be defective in materials or workmanship will be replaced at our expense, excepting labor. Installation and calibration are not covered by this warranty agreement.

Expendable items such as glass, filters, pilot lights, light bulbs, and door gaskets are excluded from this warranty coverage. Naturally, our warranty does not cover damage caused by accident, misuse, fire, flood, or acts of God.

Replacement or repair of component parts or equipment under this warranty shall not extend the warranty to either the equipment or to the component part beyond the original one year warranty period. The Forma Service Department must give prior approval for the return of any components or equipment.

THIS WARRANTY IS EXCLUSIVE AND IN LIEU OF ALL OTHER WARRANTIES, WHETHER WRITTEN, ORAL OR IMPLIED NO WARRANTIES OF MERCHANTIBILITY OR FITNESS FOR A PARTICULAR PURPOSE SHALL APPLY. Forma Scientific shall not be liable for any indirect or consequential damages including, without limitation, damages relating to lost profits or loss of products.

A word on installation and operation. We know that your customer expects a proper installation. The Forma International Sales Office is ready to help with information regarding site preparation before your equipment arrives. Our printed instruction manuals carefully detail equipment installation, operation, and preventive maintenance.

If you require immediate information regarding equipment service for your customer, please contact the Forma Service Manager at telephone: 614/373-4763, telex: 29-8205 or cable: FORMAEX. We are ready to answer your questions on equipment operation, maintenance, service and special applications.

The warranty stated above is in lieu of all other warranties, expressed or implied, of merchantibility, or fitness for particular use.

Sincerely,
Forma Scientific, Inc.

ISO 9001 REGISTERED

CONDITIONS AND TERMS OF SALE

SPECIFICATIONS AND MATERIAL CHANGES: Forma Scientific reserves the right to offer our latest and improved models at time of shipment.

SHIPMENTS: All shipments are FOB Marietta, Ohio, freight prepaid and add. Unless specific shipment instructions are provided, shipment will be made by the least expensive method.

PRICES: All prices are firm for the delivery period specified based on receipt of a purchase order within 30 days. Purchase Orders received after this time are subject to review and price adjustment. If, after acceptance of a Purchase Order the required delivery date is modified by the customer, Forma reserves the right to adjust the price to recover additional expenses incurred, due to increase in labor or material cost (including mark-up), inventory expenses, and such like. In addition, Forma Scientific will be entitled to invoice and receive payment for 90% of the value of labor and material expended.

TAXES: The prices quoted do not include any state, local or federal taxes.

PAYMENT: All payments are net 30 days from date of shipment. Order acceptance is subject to approval of our Credit Department.

CANCELLATION: Orders shall not be subject to cancellation unless cancellation charges are paid by the purchaser. Custom, non-catalog and modified units are not subject to cancellation under any condition.

DAMAGES OR SHORTAGES: Claims for shortages in shipment must be made within 5 working days of receipt of material. If the outer crate or carton is damaged in any way, customer should not sign the bill of lading until the carrier notes such damage on the bill of lading. Without this notation, carriers usually refuse customer damage claims. Unauthorized returns of goods will be refused at Forma's dock. Authorized returned goods will be allowed at a 20% restocking charge plus whatever expenses are necessary to return material to first class, saleable condition. Custom fabricated or modified equipment is not subject to return under any condition.

DELIVERY: Delivery dates are approximate and based on production at time of quotation. Forma shall not be liable for damages to the buyer for any default or delay in delivery for any reason. Every effort shall be made to meet the delivery quoted, but failure to meet the estimated delivery will not be considered cause for cancellation and/or claims which may arise from such delay.

LIMITATION OF LIABILITY: In no event, whether as a result of breach of contract, warranty or tort (including negligence and strict liability), shall Forma Scientific be liable for any consequential or incidental damages including, but not limited to, loss of profit or revenues, loss of use of the equipment or any associated equipment, down-time costs, cost of substitute equipment, costs of labor, costs due to delays or claims of Customer's own customers for such damages. Customer agrees to indemnify Forma Scientific and hold Forma Scientific harmless from any and all liability, claims, demands, actions, suits, expenses or costs, including reasonable attorney's fees relating to such consequential or incidental damages.

The responsibility of Forma Scientific for damages due to injuries, or the death of employees of the Customer, or ultimate user of the equipment being serviced, caused by the equipment, shall be limited to that portion of such damages as might be attributable to the negligence of strict liability of Forma Scientific. The Customer and ultimate user agree to indemnify Forma Scientific and hold Forma Scientific harmless from any further damages, indemnity or contribution. All warranties, limitations of liability and indemnities provided herein will survive the termination of this agreement.

Forma Scientific's liability for any claim of any kind (including negligence and strict liability) for any loss or damage arising out of, or resulting from, this agreement or from the performance or breach thereof, or from the Services, Products or Parts furnished hereunder shall in no case exceed the price of the same giving rise to the claim.

INSTALLATION: Installation of all equipment shall be by, and at the expense of, the purchaser unless quoted herein. When installation is quoted it is understood that elevator service will be made available to Forma Scientific at no charge to move the equipment to specified locations. If elevator service is not available or if access to the specified location is not adequate, Forma Scientific reserves the right to bill the purchaser for the additional cost of work required.

ACCEPTANCE: Orders, terms and specifications are subject to approval of Forma Scientific, Home Office. No variation shall be binding unless in writing signed by a Forma executive officer.