Thermo Fisher Scientific Laboratory Box Furnaces

BF51842C / BF51842PC

Installation and Operation Manual

305432H01 Rev E 16-12-2016

Part of Thermo Fisher Scientific

thermo scientific

Trademarks
Lindberg/Blue M is a brand owned by Thermo Fisher Scientific Inc.
All other trademarks mentioned in the operating instructions are the exclusive property of the respective manufacturers.

Thermo Electron LED GmbH
Robert-Bosch-Straße 1
D - 63505 Langenselbold
Germany

Thermo Electron LED GmbH is an affiliate to:
Thermo Fisher Scientific Inc.
168 Third Avenue
Waltham, MA 02451
USA

Table of Contents

List of Figures

Safety Notes

Basic Operating Precautions

These operating instructions describe 1200 °C Box Furnaces.

1200 °C Box Furnaces have been manufactured to the latest state of the art and have been tested thoroughly for flawless functioning prior to shipping. However, the Box may present potential hazards, particularly if it is operated by inadequately trained personnel or if it is not used in accordance with the intended purpose. Therefore, the following must be observed for the sake of accident prevention:

- 1200 °C Box Furnaces must be operated by adequately trained and authorized professional personnel.
- 1200 °C Box Furnaces must not be operated unless these operating instructions have been fully read and understood.
- The present operating instructions, applicable safety data sheets, plant hygiene guidelines and the corresponding technical rules issued by the operator shall be used to create written procedures targeted at personnel working with the subject matter device, detailing:
  - The decontamination measures to be employed for the Box Furnace and the accessories used with it,
  - The safety precautions to be taken when processing specific agents.
  - The measures to be taken in case of accidents.
- Repair work on the Box must be carried out only by trained and authorized expert personnel.
- The contents of these operating instructions are subject to change at any time without further notice.
- Concerning translations into foreign languages, the English version of these operating instructions is binding.
- Keep these operating instructions close to the incubator so that safety instructions and important information are always accessible.
- Should you encounter problems that are not detailed adequately in these operating instructions, please contact Thermo Fisher scientific immediately for your own safety.

Safety Considerations

DANGER

Do not modify or use equipment in a manner other than expressly intended. Modification of equipment other than that for which it is explicitly designed could cause severe injury or death. Any customer after-market retrofit violates the warranty of the equipment.

Do not modify or disconnect any safety features provided. Disconnection of the unit safety features could allow the unit to become overheated and start on fire, causing personal injury or death, product and property damage.

Do not use components or materials not specifically designed for this equipment. Failure to comply with this precaution could result in damage to equipment used or the furnace and may create an overheat situation. Also, do not use anything other than OEM exact replacement equipment and parts. Not using OEM replacement parts could cause faulty. Instrumentation readings, inoperable equipment, or temperature overshoot. Both situations may cause personal injury or death, product, and property damage.

Before using, user shall determine the suitability and integrity of the product for the intended use and that the unit has not been altered in any way. Misapplication may compromise the safety of the end user or the life of the product.

CAUTION

This product contains refractory ceramic fiber which can result in the following:

- May be irritating to skin, eyes, and respiratory tract.
- May be harmful if inhaled.
- May contain or form cristobalite (crystalline silica) with use at high temperature (above 871 °C) which can cause severe respiratory disease.
- Possible cancer hazard based on tests with laboratory animals. Animal studies to date are inconclusive. No human exposure studies with this product have been reported.

		WARNING Before maintaining this equipment, read the applicable MSDS (Material Safety Data Sheets) in the safety notes of this manual.

Warranty

Thermo Fisher Scientific warrants the operational safety and functions of the Laboratory Box Furnaces only under the condition that:

- The Laboratory Box is operated and serviced exclusively in accordance with its intended purpose and as described in these operating instructions,
- The Laboratory Box is not modified,
- Only original spare parts and accessories that have been approved by Thermo Scientific are used (third-party spares without Thermo Scientific approval void the limited warranty),
- Inspections and maintenance are performed at the specified intervals,
- An operation verification test is performed after each repair activity.

The warranty is valid from the date of delivery of the Laboratory Box to the customer.

SDS No: 5036
Revision: 4
Date of last revision: 05/08/2015

SAFETY DATA SHEET

1. IDENTIFICATION OF THE SUBSTANCE/PREPARATION AND THE COMPANY/UNDERTAKING

1.1 Product Identifier

Trade Names: **MOLDATHERM**

Substance Name: **Mixture containing Refractory Ceramic Fibers (RCF)/Alumino-Silicate Wools (ASW)**
Index Number: 650-017-00-8 (CLP Annex VI)
CAS Number: 142844-00-6
CAS Name: refractories, fibers, aluminosilicate
Registration Number: 01-2119458050-50-000x

1.2 Relevant Identified Uses

Refractory shapes for "professional users" in industrial applications involving high temperature, heat treating, and molten metal processing.

1.3 Details of the Supplier of the SDS

RMG
Rex Materials Group
P.O. Box 287
Howell, MI 48844
(517) 223-3787, (517) 338-5062, fax
info@rexmaterials.com

1.4 Emergency Telephone Number

Chemtrec North America: (800) 424-9300
Chemtrec Outside North America: +1 (703) 527-3887

2. HAZARDS IDENTIFICATION

2.1 Classification of the Substance or Mixture

The U.S. Occupational Safety and Health Administration (OSHA) Hazard Communication Standard (HCS) 2012 indicates that IARC group 2B corresponds to OSHA HCS 2012 Category 2 carcinogen classification (see, e.g., §1910.1200, Appendix F, Part D). Under OSHA HCS 2012, RCF is classified as a Category 2 carcinogen.

2.2 Labeling Elements

2.2.1 Hazard Pictogram

2.2.2 Signal Word
Warning

2.2.3 Hazard Statements
Suspected of causing cancer by inhalation.

2.2.4 Precautionary Statements
Do not handle until all safety instructions have been read and understood.
Use respiratory protection as required; see section 8 of the Safety Data Sheet
If concerned about exposure, get medical advice.
Store in a manner to minimize airborne dust.
Dispose of waste in accordance with local, state and federal regulations.

2.3 Other Hazards
Mild mechanical irritation to skin, eyes, and upper respiratory system may result from exposure. These effects are usually temporary.

2.4 Hazardous Materials Identification System (HMIS)
Health: 1* Flammability: 0 Reactivity: 0 Personal Protection Index: X (Employer Determined)
(* denotes potential for chronic effects)

3. COMPOSTION/INFORMATION ON INGREDIENTS

Name	CAS No	Index or EINECS No.	Weight %	Classification HCS 2012
RCF/ASW	142844-00-6	650-017-00-8	40-95	Category 2 carc.
Amorphous Silica	7631-86-9	231-545-4	0-60	not classified
Inert Materials	na	na	0-40	na

4. FIRST AID MEASURES

4.1 Description of First Aid Measures
4.1.1 Inhalation:
If respiratory tract irritation develops, move the person to a dust free location. Get medical attention if the irritation continues. See Section 8 for additional measures to reduce or eliminate exposure.

4.1.2 Eye Contact:
If eyes become irritated, flush immediately with large amounts of lukewarm water. Eyelids should be held away from the eyeball to ensure thorough rinsing. Do not rub eyes. Get medical attention if irritation persists.

4.1.3 Skin Irritation:
Handling of this material may cause mild mechanical temporary skin irritation. If this occurs, rinse affected areas with water and wash gently. Do not rub or scratch exposed skin. Using a skin cream or lotion after washing may be helpful.

4.1.4 Ingestion:
If gastrointestinal tract irritation develops, move the person to a dust free environment.

4.2 Most Important Symptoms and Effects, Both Acute and Delayed
Mild mechanical irritation to skin, eyes, and upper respiratory system may result from exposure. These effects are usually temporary.

4.3 Indication of any Immediate Medical Attention and Special Treatment Needed.
Treat symptomatically. Skin and respiratory effects are the result of temporary, mild mechanical irritation; exposure does not result in allergic manifestations.

5. FIREFIGHTING MEASURES

5.1 Extinguishing Media
Products are non-combustible. Use extinguishing media suitable for type of surrounding combustible materials.

5.2 Special Hazards Arising from the Substance or Mixture
See Section 10.6 (due to starch burnout).

5.3 Advice for Firefighters
Use protective equipment and precautions appropriate for type of surrounding fire.

5.4 National Fire Protection Association (NFPA) Codes
Flammability: 0 Health: 1 Reactivity: 0 Special: 0

6. ACCIDENTAL RELEASE MEASURES

6.1 Personal Precautions, Protective Equipment, and Emergency Procedures
Avoid dust formation. Use protective equipment and evacuate unnecessary personnel if appropriate. See Section 8, Exposure Controls/Personal Protection.

6.2 Environmental Precautions
None known.

6.3 Methods for Cleaning Up
Pick up and arrange disposal with minimal dust creation. Vacuum (HEPA) or wet sweep as appropriate. Do not use compressed air for clean up.

7. HANDLING AND STORAGE

7.1 Precautions for Safe handling
Avoid dust formation and its accumulation. Handle in accordance with good industrial hygiene and safety practices. Limit the use of power tools unless in conjunction with local exhaust ventilation. Wear personal protective equipment as outlined in Section 8.2.2.

7.2 Conditions for Safe Storage, Including and Incompatibilities
Keep dry. Protect against water and moisture. Product packaging may contain residue. Do not reuse. Minimize dust emissions during unpacking.

7.3 Specific End Use(s)
See Section 1.2.

8. EXPOSURE CONTROLS / PERSONAL PROTECTION

8.1 Control Parameters
Industrial hygiene standards and occupational exposure limits vary between countries and local jurisdictions. Check which exposure levels apply to your facility and comply with local regulations. A qualified industrial hygienist can assist with specific workplace evaluation including recommendations for respiratory protection. Examples of national exposure limits are provided in the table below.

		Exposure Limits	
	RCF/ASW	**Amorphous Silica**	**Inert Materials**
US OSHA	na*	80 mg/m^3 / % SiO_2	5 mg/m^3 (resp.)
ACGIH	0.2 f/cc	10 mg/m^3	10 mg/m^3
Argentina	0.2 f/cc	na	10 mg/ m^3
Australia	0.5 f/cc	2 mg/m^3	10 mg/ m^3
Austria	0.5 f/cc	0.3 mg/m^3	6 mg/ m^3
Belgium	0.5 f/cc	na	3 mg/ m^3
Canada	0.2-1.0 f/cc	na	na
Denmark	1.0 f/cc	na	5 mg/ m^3
Egypt	na	na	na
EU	na	na	na
Finland	0.2 f/cc	na	na
France	0.1 f/cc	na	5 mg/ m^3
Germany	0.2 f/cc	4 mg/m^3	3 mg/ m^3
Hungary	na	na	na
Iceland	1.0 f/cc	na	na
India	na	10 mg/m^3	na
Italy	0.2 f/cc	na	3 mg/ m^3
Poland	0.5 f/cc	na	na
Spain	0.5 f/cc	na	3 mg/ m^3
Sweden	0.2 f/cc	na	5 mg/ m^3
The Netherlands	0.5 f/cc	na	5 mg/ m^3
UK	1.0 f/cc	6 mg/m^3	4 mg/ m^3
United Arab Emirates	na	na	na
Venezuela	0.2 f/cc	na	na

* Except for the state of California, where the PEL for RCF is 0.2 f/cc 8-hr TWA, there is no specific regulatory standard for RCF in the U.S. In the absence of an OSHA PEL, the HTIW Coalition has adopted a recommended exposure guideline (REG) of 0.5 f/cc, as measured under NIOSH Method 7400 B. For further information on the history and development of the REG see "Rationale for the Recommended Exposure Guideline" at Attachment II of the HTIW Coalition Product Stewardship Program http://www.htiwcoalition.org/documents/PSP_2012.pdf .

8.2 Exposure Controls
8.2.1 Appropriate Engineering Controls:
Use engineering controls such as local exhaust ventilation, point of generation dust collection, down draft work stations, emission controlling tool designs, and materials handling equipment designed to minimize airborne particulate emissions. If necessary, consult an industrial hygienist to design workplace controls and practices.

8.2.2 Personal Protection Equipment:
Respiratory Protection:
When engineering and/or administrative controls are insufficient, the use of appropriate respiratory protection, pursuant to the requirements of OSHA Standards 29 CFR 1910.134 and 29 CFR 1926.103, is recommended. The evaluation of workplace hazards and the identification of appropriate respiratory protection is best performed, on a case by case basis, by a qualified Industrial Hygienist.

Eye Protection:
Wear safety glasses with side shields or other forms of eye protection in compliance with appropriate OSHA standards to prevent eye irritation. The use of contact lenses is not recommended, unless used in conjunction with appropriate eye protection. Do not touch eyes with soiled body parts or materials. If possible, have eye-washing facilities readily available where eye irritation can occur.

Skin Protection:
Wear gloves, head coverings, and full body clothing as necessary to prevent skin irritation. Washable or disposable clothing may be used. If possible, do not take unwashed clothing home. If soiled work clothing must be taken home, employers should ensure employees are thoroughly trained on the best practices to minimize or avoid non-work dust exposure (e.g., vacuum clothes before leaving the work area, wash work clothing separately, rinse washer before washing other household clothes, etc.).

9. PHYSICAL AND CHEMICAL PROPERTIES

APPEARANCE AND ODOR:	white, gray, or tan board or shape / no odor
pH:	na
MELTING POINT:	>1650° C (3002° F)
BOILING POINT:	na
FLASH POINT:	na
EVAPORATION RATE:	na
FLAMMABILITY:	non-flammable
EXPLOSIVE LIMITS:	not explosive
VAPOR PRESSURE:	na
VAPOR DENSITY (Air = 1):	na
BULK DENSITY:	0.2-0.8 g/cc
SOLUBILITY (%):	insoluble
PARTITION COEFFICIENT:	na
AUTO-IGNITION TEMPERATURE:	na
DECOMPOSITION TEMPERATURE:	na (see Section 10.6)
VISCOSITY:	na for a solid

10. STABILITY AND REACTIVITY

10.1 Reactivity
None.

10.2 Chemical Stability
Stable under conditions of normal use.

10.3 Possibility of Hazardous Reactions
None.

10.4 Conditions to Avoid

None. Please refer to handling and storage advice in Section 7.

10.5 Incompatible Materials
None.

10.6 Hazardous Decomposition Products
Exposure to temperatures above approximately 1000°C (1832°F) may lead to the formation of crystalline silica. The occurrence and extent of crystalline phase formation is dependent on the duration and temperature of exposure and/or the presence of fluxing agents. The presence of crystalline phases can be confirmed only through laboratory analysis of the "hot face" material. Please refer to Section 11.4 for more information on “after-service” RCF.

11. TOXICOLOGICAL INFORMATION

Moldatherm products vary in hardness and friability. Especially if cut, ground, or otherwise broken up, exposure may be possible, predominantly by inhalation or ingestion of the dusts. The primary and most significant constituent of the dust is RCF/ASW, so the toxicological information provided below is exclusively related to RCF/ASW.

HEALTH DATA SUMMARY

Epidemiological studies that include most people who have ever worked in domestic RCF production have indicated no increased incidence of respiratory disease or other significant health effects in occupationally exposed workers. In animal studies, long-term, high-dose inhalation exposure resulted in the development of respiratory disease in rats and hamsters.

11.1 Toxicokinetics, Metabolism and Distribution
11.1.1 Basic Toxicokinetic
Exposure is predominantly by inhalation or ingestion. Man made vitreous fibers of a similar size to RCF/ASW have not been shown to migrate from the lung and/or gut and do not become located in other parts of the body. When compared to many naturally occurring minerals, RCF/ASW has a low ability to persist and accumulate in the body (half-life of long fibers (>20 µm) in 3 week rat inhalation test is approx. 60 days).

11.1.2 Human Toxicological data
In order to determine possible human health effects following RCF exposure, the University of Cincinnati has been conducting medical surveillance studies on RCF workers in the U.S. The Institute of Occupational Medicine (IOM) has conducted medical surveillance studies on RCF workers in European manufacturing facilities.

Pulmonary morbidity studies among production workers in Europe and USA have demonstrated an absence of interstitial fibrosis and no decrement in lung function associated with current exposures, but have indicated a reduction of lung capacity among smokers.

A statistically significant correlation between pleural plaques and cumulative RCF exposure was evidenced in the USA longitudinal study.

The USA mortality study did not show evidence of increased lung tumor development either in the lung parenchyma or in the pleura.

11.2 Information on Toxicological effects
Acute toxicity: short term inhalation
No data available: Short term tests have been undertaken to determine fiber (bio) solubility rather than toxicity; repeat dose inhalation tests have been undertaken to determine chronic toxicity and carcinogenicity.

Acute toxicity: oral
No data available: Repeated dose studies have been carried out using gavage. No effect was found.

Skin corrosion/irritation:
Not possible to obtain acute toxicity information due to the nature of the substance

Serious eye damage/irritation:
Not possible to obtain acute toxicity information due to the nature of the substance

Respiratory or skin sensitization
No evidence from human epidemiological studies of any respiratory or skin sensitization potential

Germ cell mutagenicity
Method: In vitro micronucleus test
Species: Hamster (CHO)
Dose: 1-35 mg/ml
Routes of administration: In suspension
Results: Negative

Carcinogenicity
Method: Inhalation. Multi-dose
Species: Rat,
Dose: 3 mg/m3, 9 mg/m3 and 16 mg/m3
Routes of administration: Nose only inhalation
Results: Fibrosis just reached significant levels at 16 and 9 mg/m3 but not at 3 mg/m3. None of the parenchymal tumor incidences were higher than the historical control values for this strain of animal.

Method: Inhalation. Single dose
Species: Rat
Dose: 30 mg/m3
Routes of administration: Nose only inhalation
Results: This study was designed to test the chronic toxicity and carcinogenicity of RCF at extreme exposures. Tumor incidence (incl. mesothelioma) was raised at this dose level. The presence of overload conditions (only detected after the experiment was completed), whereby the delivered dose exceeded the clearance capability of the lung, makes meaningful conclusions in terms of hazard and risk assessment difficult.

Method: Inhalation. Single dose
Species: Hamster
Dose: 30 mg/m3
Routes of administration: Nose only inhalation
Results: This low quality study in hamsters (no justification for exposure concentration used and pre existing and concurrent infections in the test animals) produced mesothelial lesions of uncertain significance. Subsequent studies in hamsters with glass fibers indicated that the lung burdens of RCF in this experiment were between 5 and 10 times more than that needed to produce overload, and the results are therefore difficult to interpret.

There are reports of injection studies with some similar materials. While some intraperitoneal injection (IP) studies reported the development of tumors in rats, the relationship of these results to classification remains controversial. Interpretation of these animal experiments is complex, and there is not agreement amongst scientists internationally. A summary of the evidence relating to RCF carcinogenicity in vivo can be found in SCOEL/SUM/165 and in Utel and Maxim 2010.

Reproductive toxicity;
Method: Gavage
Species: Rat
Dose: 250 mg/kg/day
Routes of administration: Oral
Results: No effects were seen in an OECD 421 screening study. There are no reports of any reproductive toxic effects of mineral fibers. Exposure to these fibers is via inhalation and effects seen are in the lung. Clearance of fibers is via the gut and the feces, so exposure of the reproductive organs is extremely unlikely.

STOT-Single exposure; NA
STOT-Repeated exposure; NA
Aspiration hazard: NA

11.3 Irritant Properties

Negative results have been obtained in animal studies (EU method B 4) for skin irritation. Inhalation exposures using the nose only route produce simultaneous heavy exposures to the eyes, but no reports of excess eye irritation exist. Animals exposed by inhalation similarly show no evidence of respiratory tract irritation.

Human data confirm that only mechanical irritation, resulting in itching, occurs in humans, Screening at manufacturers' plants in the UK has failed to show any human cases of skin conditions related to fiber exposure.

11.4 Other Information

After-service RCF may contain various crystalline phases, generally confined to a thin layer of material at the "hot-face" side of these products. However, an analysis of after-service RCF samples obtained pursuant to an exposure monitoring agreement with the EPA, found that in the furnace conditions sampled, most did not contain detectable levels of crystalline silica. Other relevant RCF studies found that (1) simulated after-service RCF showed little, or no, activity where exposure was by inhalation or by intraperitoneal injection; and (2) after-service RCF was not cytotoxic to macrophage-like cells at concentrations up to 320 microg/cm^2; by comparison, pure quartz or cristobalite, two of the primary phases of silica, were significantly active at much lower levels circa 20 microg/cm^2.

11.5 International Agency for Research on Cancer and National Toxicology Program

IARC, in 1988, Monograph v.43 (and later reaffirmed in 2002, v.81), classified RCF as possibly carcinogenic to humans (group 2B). IARC evaluated the possible health effects of RCF as follows:

- There is inadequate evidence in humans for the carcinogenicity of RCF.
- There is sufficient evidence in experimental animals for the carcinogenicity of RCF.

The Annual Report on Carcinogens (latest edition), prepared by NTP, classified respirable RCF as "reasonably anticipated" to be a carcinogen).

Not classified by OSHA.

12. ECOLOGICAL INFORMATION

These products are inert materials that remain stable overtime. They are insoluble in the natural environment and are chemically identical to inorganic compounds found in the soil and sediment No adverse effects on the environment have been identified or are anticipated.

13. DISPOSAL CONSIDERATIONS

13.1 Waste Treatment

Waste from these products may be generally disposed of at a landfill which has been licensed for this purpose. Unless wetted, such a waste may be dusty and should be properly sealed in containers for disposal. At some authorized disposal sites, dusty waste may be treated differently in order to ensure they are dealt with promptly and to avoid being wind blown. This product, as manufactured, is not classified as a listed or characteristic hazardous waste according to U. S. Federal regulations (40 CFR 261). Any processing, use, alteration or chemical additions to the product, as purchased, may alter the disposal requirements.

Under U. S. Federal regulations, it is the waste generator's responsibility to properly characterize a waste material, to determine if it is a "hazardous" waste. Check local, regional, state or provincial regulations to identify all applicable disposal requirements.

13.2 Additional Information

When disposing of waste and assigning European Waste Code, any possible contamination during use will need to be considered and expert guidance sought as necessary. Please check for any national and/or regional regulations, and refer to the European list (Decision No 2000/532/CE as modified) to identify appropriate waste numbers.

14. TRANSPORT INFORMATION

Not classified as dangerous goods under relevant international transport regulations (ADR, RID, ICAO/IATA, IMDG, ADN).

15. REGULATORY INFORMATION

15.1 U.S. Regulations
EPA:
Superfund Amendments and Reauthorization Act (SARA) Title III - This product does not contain any substances reportable under Sections 302, 304, 313, (40 CFR 372). Sections 311 and 312 (40 CFR 370) apply (delayed hazard).
Hazard Categories
Immediate Hazard – No
Delayed Hazard – Yes
Fire Hazard – No
Pressure Hazard – No
Reactivity Hazard - No
Toxic Substances Control Act (TSCA) – RCF has been assigned a CAS number; however, it is a simple mixture and therefore not required to be listed on the TSCA inventory. Other substances in this product are listed, as required, on the TSCA inventory. The components of RCF are listed on the inventory.
Comprehensive Environmental Response, Compensation and Liability Act (**CERCLA)** and the **Clean Air Act (CAA)** RCF contains fibers with an average diameter greater than one micron and thus is not considered a hazardous air pollutant.

OSHA:
Comply with **Hazard Communication Standards** 29 CFR 1910.1200 and 29 CFR 1926.59 and the **Respiratory Protection Standards** 29 CFR 1910.134 and 29 CFR 1926.103.

California:
"Ceramic fibers (airborne particles of respirable size)" is listed in **Proposition 65, The Safe Drinking Water and Toxic Enforcement Act of 1986** as a chemical known to the State of California to cause cancer.

Other States:
RCF products are not known to be regulated by states other than California; however, state and local OSHA and EPA regulations may apply to these products. If in doubt, contact your local regulatory agency.

15.2 European Regulations

RCF is classified under the CLP (classification, labeling and packaging of substances and mixtures) regulation as a category 1B carcinogen. On January 13, 2010 the European Chemicals Agency (ECHA) updated the candidate list for authorization (Annex XV of the REACH regulation) and added 14 new substances in this list including aluminosilicate refractory ceramic fibers.

As a consequence, EU (European Union) or EEA (European Economic Area) suppliers of articles which contain aluminosilicate refractory ceramic fibers in a concentration above 0.1% (w/w) have to provide sufficient information, available to them, to their customers or upon requests to a consumer within 45 days of the receipt of the request. This information must ensure safe use of the article, and as minimum contains the name of the substance.

15.3 Canadian Regulations

Canadian Workplace Hazardous Materials Information System (WHMIS) - RCF is classified as Class D2A – Materials Causing Other Toxic Effects.
Canadian Environmental Protection Act (CEPA) - All substances in this product are listed, as required, on the Domestic Substance List (DSL).

16. OTHER INFORMATION

16.1 Abbreviations and Acronyms

ACGIH	American Conference of Governmental Industrial Hygienists
ADN	European Agreement concerning the International Carriage of Dangerous Goods by Inland Waterways
ADR	Transport by road, Council Directive 94/55/EC
ASW	Alumino-Silicate Wool
CARE	Controlled and Reduced Exposure
CAS	Chemical Abstracts Service
CLP	Regulation (EC) No 1272/2008 on Classification, Labeling and Packaging of substances and mixtures
DSL	Domestic Substance List
EEA	European Economical Area
ECFIA	European Ceramic Fibre Industry Association
EINECS	European Inventory of Existing Chemical Substances
EPA	Environmental Protection Agency
EU	European Union
f/cc	fibers per cubic centimeter
g/cc	grams per cubic centimeter
GHS	Globally Harmonized System of Classification and Labeling Chemicals
HCS 2012	Hazard Communication Standard of 2012
HNOC	Hazards Not Otherwise Classified
HTIWC	High Temperature Insulating Wool Coalition
IARC	International Agency for Research on Cancer
ICOA/IATA	Regulations relating to transport by air
IMDG	Regulations relating to transport by sea
mg/ m^3	milligrams per cubic meter
na	not available or not appropriate
OSHA	the U.S. Occupational Safety and Health Administration
PEL	Permissible Exposure Limit (OSHA)
RCF	Refractory Ceramic Fiber
REACH	Regulation (EC) No 1907/2006 dated 18 December 2006 on Registration, Evaluation, Authorization and Restriction of Chemicals
RID	Transport by rail, Council Directive 96/49/EC
SARA	Superfund Amendment and Reauthorization Act
SDS	Safety Data Sheet (replaces MSDS, Material Safety Data Sheet)
STOT	Specific Target Organ systemic Toxicity
WHMIS	Workplace Hazardous Materials Information System

16.2 References

"Good Working Practices," HTIW Coalition, July 2012, htiwcoalition.org
"CARE Guidance Documents," ECFIA industrial hygiene guidance programme, ecfia.eu
"Hazards from the Use of Refractory Ceramic Fibre," HSE 267 (1998)
Numerous other publications can be found at the websites of ECFIA and HTIWC.

16.3 Revision Summary

Rev 4 comprehensive revision to align with HCS 2012

The information contained herein is presented in good faith and is believed to be accurate as of the effective date of this Safety Data Sheet. Employers may use this SDS to supplement other information available to them in their efforts to assure the health and safety of their employees and the proper use of the product. Given the summary nature of this document, Rex Materials Group does not make any warranty (express or implied), assume any responsibility, or make any representation regarding the completeness of this information or its suitability for the purposes envisioned by the user. Further, Rex Materials Group disclaims any responsibility for damage or injury resulting from abnormal use of the product, failure to adhere to recommended practices, or any hazards inherent in the nature of the product.

Explanation of Safety Information and Symbols

Safety Notes and Symbols Used Throughout These Operating Instructions

		DANGER Indicates a hazardous situation which, if not avoided, will result in death or serious injuries.

		WARNING Indicates a hazardous situation which, if not avoided, could result in death or serious injuries.
		CAUTION Indicates a situation which, if not avoided, could result in damage to equipment or property.
		NOTE Is used for useful hints and information regarding the application.

Additional Symbols for Safety Information

		Wear safety gloves!
		Wear safety goggles!

		Harmful liquids!
		Electrical shock!
		Hot surfaces!
		Fire hazard!
		Explosion hazard!
		Suffocation hazard!
		Biological hazard!
		Contamination hazard!

Standards and Directives

The Box Furnaces complies with the following standards and guidelines:

- Current/Approved Agency standards (Underwriters Laboratory/CSA/CE).

Introduction

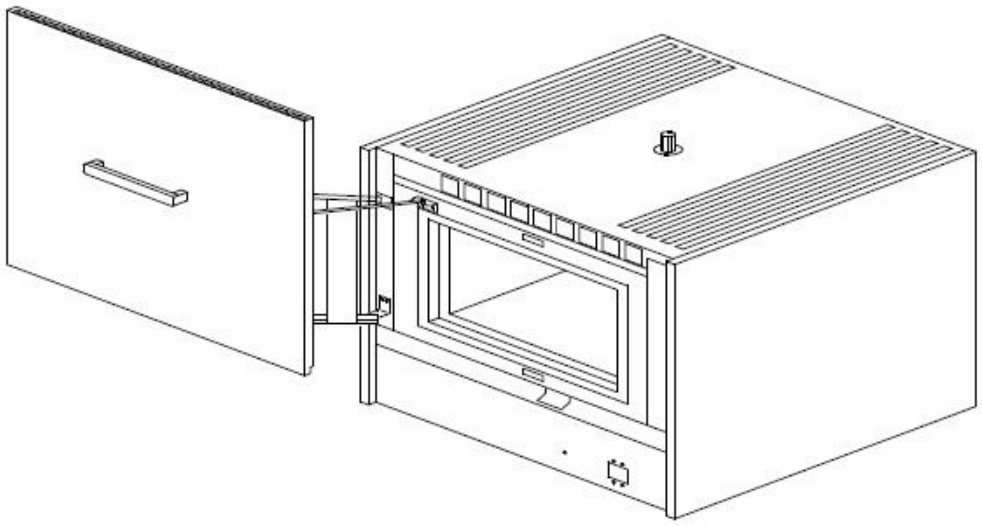

Figure 1. BF51842 Laboratory Box Furnace

The Thermo Fisher Scientific BF51842 is a reliable, energy efficient 1200 °C laboratory box furnace. The heating elements and low thermal mass Moldatherm® insulation provide fast duty cycles, energy conservation, and efficient programming. Refer to **"Table 1"** for specifications.

Features and Benefits

- Controlled heat-up rate eliminates thermal shock to materials.
- Quick heat-up and cool-down rates.
- Safety interlock switch automatically interrupts power to heating elements when door is opened. This feature protects heating elements and eliminates operator's exposure to electrical shock.

- Energy efficient Moldatherm insulation suitable for high interior-exterior temperature differential. The unit is rated for a maximum operating temperature of 1200 °C.
- Resists attack from most corrosive agents and can be used in atmospheres other than air.
- Replaceable hearth plates and shelves.
- Programmable Control.
- Main power ON/OFF switch and power indicator on control panel.
- Double wall construction.
- Front control panel is recessed at the top. This feature provides easy viewing of the control LED and protection for the control instrumentation.
- Optional flow meter regulates the flow of air or inert gas to the furnace chamber.

Specification

Table 1. BF51842 Laboratory Box Furnaces

Model	Dimension WXF-BXH in.(cm)		Maximum Operating Temp	Watts	Thermo couple	Voltage	Integral Control	Shipping Weight lbs(kg)
	Chamber	Exterior						
BF51842C BF51842BC	15x15x15 (38.1x38.1x38.1)	29x28x33 (73.6x71.1x83.8)	1200 °C	6,400	Type R	208/240 VAC 50/60 Hz single phase	UP150	280 (127)
BF51842PC BF51842PBC	15x15x15 (38.1x38.1x38.1)	29x28x33 (73.6x71.1x83.8)	1200 °C	6,400	Type R	208/240 VAC 50/60 Hz single phase	UP150	280 (127)

Pre-Installation

Unpacking

Carefully unpack and inspect the unit and all accessories for damage, if you find any damage, keep the packing materials and immediately report the damage to the carrier. We will assist you with your claim, if requested. Do not return goods to Theorem Fisher Scientific without written authorization. When submitting a claim for shipping damage, request that the carrier inspect the shipping container and equipment.

Operating Conditions

High concetrations of sulfates, chlorides, fluorides, alkalis, and V_2O_5 can have corrosive effects on the ceramic fiber. Contact Theorem Fisher Scientific for additional information about the effects of specific atmospheres on furnace performance.

With prolonged use, hairline cracks can develop in the insulation materials. These minor cracks will not affect the furnace's performance. We recommend turning off the furnace completely when not in use. The heating unit is not damaged by rapid heating and cooling cycles.

Atmosphere Systems

The BF51842 Series furnaces are not designed for use with combustible or inert atmospheres requiring an air tight chamber. If an exhaust port is used, the furnace should not be located in an enclosed area without proper ventilation.

		WARNING Do not use combustible gases in this furnace.

		CAUTION Avoid combustible products which generate toxic or hazardous vapor or fumes. Work should only be done in a properly vented environment.

Installation

Do not exceed the electrical and temperature ratings printed on the dataplate of the furnace.

		CAUTION Improper operation of the furnace could result in dangerous conditions. To preclude hazard and minimize risk, follow all instructions and operate within design limits noted on the dataplate.

Location

Install the furnace in a level area from vibration. To permit proper airflow, leave at least three inches of space on all sides of the unit and 12 inches above the unit.

Wiring

Thermo Fisher Scientific model BF51842 furnaces are designed for operation on 240 VAC. The furnaces will operate on 208 volts, but will have reduced heat up rates.

Power and ground wires are not provided with the furnaces.

1. Suitable lengths of properly sized wires must be acquired prior to the installation of your furnace. The BF51842 will draw approximately 20 amps on 240 VAC. Minimum recommended wire gauge size is 14 gauge. A high temperature (150 °C) wire casing is also recommended. A ground wire should be provided per local code.
2. Remove the right panel (side with High Voltage label) of the furnace by removing the appropriate screws. Removing the side panel allows for access to the terminal block and grounding screw, located at the base of the unit.
3. The 7/8 inch diameter hole located on the lower rear panel may be used to mount a standard 1/2 inch electrical conduit connector.

4. Thread two properly sized power wires and one properly sized ground wire through the conduit hole. The wires should be marked L1, L2, and ground. Insert power leads L1 and L2 into the terminal block and tighten down securely. Ground on the provided ground screw.
5. Check that the thermocouple (top left of rear of furnace chamber) is securely mounted and that it is not damaged. Remove small cover on Rear panel of furnace to check thermocouple wiring connections. Red is always negative. Refer **Figure 2. "Thermocouple"** .
6. As a final inspection step, check that all electrical connections are secure and verify that the door stop bracket properly contacts the power interrupt switch near the front of the furnace. If mechanical adjustment is necessary, slight bending of the switch arm can be done.
7. Replace and secure the small cover on the Rear panel and right side panel of the furnace using the necessary screws.

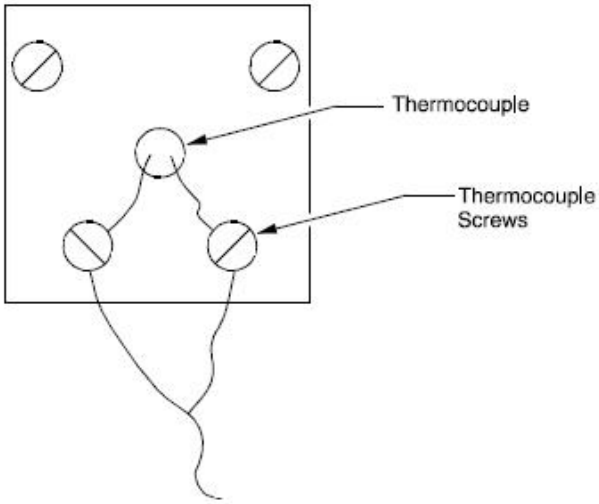

Figure 2. Thermocouple

Gas Inlet Tube (Refer Figure 3. Gas Inlet Tube Assembly)

The gas inlet tube assembly has been packaged separately to avoid breakage during shipping and handling.

Even if you do not intend to use the gas inlet, you must install the assembly before operating the furnace. The only tool you need is a Phillips head screwdriver.

To install the gas inlet assembly:

1. Carefully remove the assembly from the package and inspect for any damage.
2. Remove the two mounting screws from the rear housing panel of the furnace.

3. Insert the ceramic tube end through the access hole in the rear of the furnace and guide the tube into the back of the chamber.
4. Align the mounting holes in the rear housing panel with the holes in the gas inlet tube assembly and secure the assembly with the mounting screws.

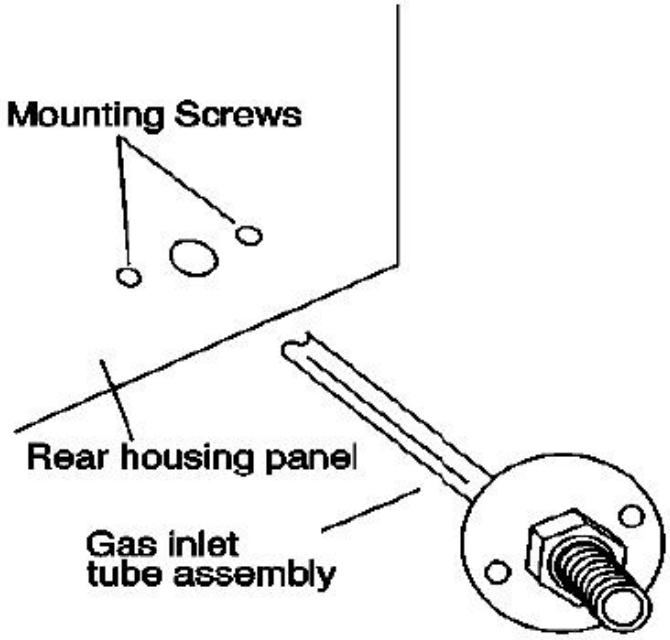

Figure 3. Gas Inlet Tube Assembly.

Guidelines for Ashing Applications

Ashing products at relatively low furnace temperatures (400 ° to 800 °C) may cause carbon residue to build up on the walls, floor, ceiling and heating elements inside the furnace chamber. The carbon will look like a black powder, similar to smoke on glass from a candle.

Carbon is an electrical conductor. If the furnace chamber and heating elements are coated with carbon, an electrical short-circuit may occur and cause the elements to overheat and burn out.

There is also some danger that the carbon residue will be absorbed through the surface of the Moldatherm insulation and affect the fully embedded heating elements.

The best way remove carbon residue from the chamber and elements surfaces is to operate the empty furnace at a chamber temperature above 900 °C for one hour. Do this regularly, whenever the chamber interior shows signs of carbon residue.

Do not scrub or scrape the chamber surfaces - this may damage the heating elements and the insulation.

Hearth Plate Information

Why Use

- To provide a load bearing surface and distribute the weight of product being heated.
- To protect the furnace chamber from spillage.
- To lengthen the life of furnace, by allowing heat from the chamber floor to circulate into the chamber center.

When to use

- Hearth Plates are recommended during each furnace operation.

How to Install

- Hearth plates are designed with a grooved surface.
- The grooved surface must be positioned against the chamber floor.

		CAUTION Most hearth plate materials made of ceramic fibre and can be broken if dropped.

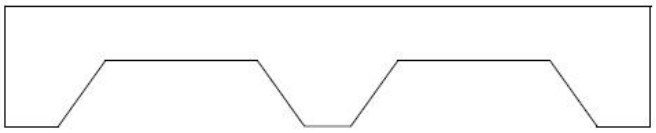

Figure 4. Hearth Plate Ripped

Shelf Installation in Box Furnaces

1. Model series BF51731 and BF51732 are supplied with a pair of half-depth shelves.

2. One or both of these shelves can be installed into the chamber using the single groove at the mid-point on each side wall

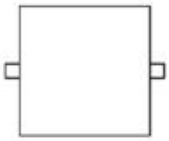

Figure 5. BF51731 and BF51732 Chamber Showing Shelf Groove.

3. Model series BF51841 and BF51842 are supplied with a pair of half-depth shelves.
4. One or both of these shelves can be installed into the chamber using any of the three groove sets near the mid-point on each side wall.

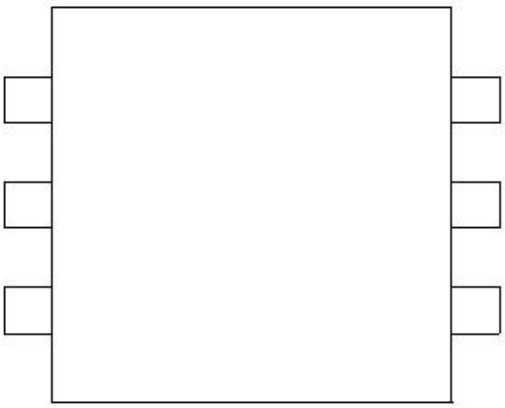

Figure 6. BF51841 and BF51842 Chamber Showing Shelf Groove

Operation

Initial Start-up

To start up the furnace for the first time:

1. Check to ensure that furnace is properly wired. Refer to the Section **“Wiring”**.
2. Apply power to the furnace by closing the power circuit breaker on the base of the furnace.
3. Make sure the door is fully closed. A safety disconnect switch is provided to turn off when the door is not closed.Use both handles when opening and closing the furnace. Thermo Fisher recommends an initial start-up of running the furnace at 1100 °C for 7-10 hours in order to burn off contaminants and to form a protective oxide layer on the heating element.
4. Adjust controller setpoint to 1100 °C. If the furnace has over-temperature protection (option B), set that instrument above 1100 °C. Allow furnace to run for 7-10 hours.

The furnace is now ready for normal operation. Refer to Section **“Operation - UT150 Controller”** and Provide manuals for information on the use of the control instruments.

Vents

The vent provided at the top of the furnace is designed to help remove contaminants from the furnace chamber. Whenever high amounts of contaminants, (smoke, chemical vapors, etc.) are present, the vent should be opened to aid in prolonging heating element life.

Atmosphere Port

The BF51842 furnace has a factory-installed air/atmosphere port. Most inert atmospheres (i.e. nitrogen, argon, and helium) can be safely run in the BF51842 box furnace. However, maximum temperatures may be derated depending on atmosphere. An initial burn in period in air is recommended. Please contact Thermo Fisher Scientific prior to using the furnace with an inert atmosphere.

The furnace should be run for 7-10 hours at 1100 °C before using an inert atmosphere and after every 60 hours of use with an inert atmosphere. This burn in process will help remove contaminants and provides a protective oxide layer on the heating elements.

The BF51842 furnace is not designed to be a gas-tight atmosphere furnace.

Flow Meter Option

If your unit has the FM option, there is an adjustable gas flow meter located on the front control panel. The flow rate can be adjusted to 1.0 to 10.0 cubic feet per hour. The flowmeter is designed to regulate the flow of air or inert gas to the furnace chamber. Do not use it with combustible or volatile gases.

Programming the UP550 Controller

1. Determine what the target temperatures and the time to reach or dwell at these temperatures, in order to achieve your process goals. Make a graph similar to the example below to identify these temperature and time values.

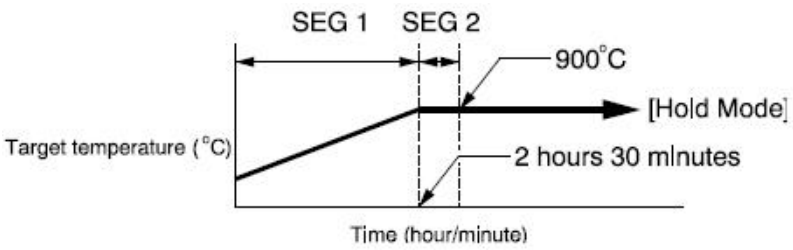

2. To begin entering a program into the controller, make sure the controller is only in the LOC (local) mode or the RST (reset) mode. These are specified with green indicators to the left of the LCD (liquid crystal display).

If any other green indicators are illuminated, follow these steps to turn them off.

i. If PRG (program) is illuminated, press and hold the “RESET” button for at least 2 seconds to cause the PRG indicator to extinguish and RST indicator to illuminate.

ii. If PRG and HLD (hold) indicators are illuminated, press and hold the “RESET” button for at least 2 seconds to cause the PRG and HLD indicators to extinguish and RST indicator to illuminate.

iii. If MAN (manual) indicator is illuminated, press and release the “MODE” button to display "MODE: AUT01" and with "changing!" flashing on the lower display. Press and release the “SET/ENT” button once.

iv. If MAN (manual) indicator is illuminated, press and release the “MODE” button to display "MODE: AUT01" and with "changing!" flashing on the lower display. Press and release the “SET/ENT” button once.

3. While in the LOC or RST mode, press and hold the “SET/ENT” button for at least three seconds to display "PROG programming main menu" in the lower display.
4. Press and release the “SET/ ENT” button to display "LOC local mode set sub menu" in the lower display.
5. Press and release the “UP ARROW” button to display "PRG programming sub menu" in the lower display.
6. Press and release the “SET/ENT” button to display the pattern and sequence numbers "01.00" in the upper display, and the lower display:

```
MENU: PROG/PRG #1
PTno. Input
PTN = 1
```

This display shows where to select the program pattern number. The default value is “1”. To select another pattern use the “UP and DOWN ARROW” buttons to make your selection, then press and release the “SET/ENT” button to enter this new value. If no changes to the program pattern number are needed, proceed to the next step.

7. Press and release the “SET /ENT” button TWICE to show the lower display:

```
MENU: PROG/PRG # 3

start set point 1

SSP1 = 25 °C
```

If the “25” value is NOT displayed, select “25” with “UP and DOWN ARROW” buttons then press and release the “SET/ENT” button ONCE.

8. Press and release the “SET /ENT” button ONCE to show the lower display:

```
MENU:PROG/PRG # 5

start code select

STC = 0
```

If the "0" (zero) value is not displayed, select “0” with “UP and DOWN ARROW” button then press and release the “SET/ENT” button ONCE.

9. Press and release the “SET/ENT” button ONCE to s how the pattern and sequence numbers "01.01" in the upper display, and the lower display:

```
MENU: PROG/PRG # 24

target set point 1

TSP1 = [any value] °C
```

10. Select your first target set point with the “UP and DOWN ARROW” buttons. “changing!” will blink on the lower display until the desired target set point is displayed. Press and release the “SET/ ENT”’ button to enter the target set point into the program.

11. Press and release the “SET /ENT” button TWICE to show the lower display:

```
MENU: PROG/PRG # 26

segment time

TIME = 0h00
```

12. Select your first time length in which you want to reach the target set point selected in step 10, with the “UP and DOWN ARROW” buttons. This time value is displayed in hours and minutes, with the hour value to the left of "h" and minutes to the right of "h" in the lower display. Press and release the “SET/ENT” button to enter the time length into the program.

13. Press and release the “SET /ENT” but ton ONCE to s how the lower display:

```
MENU: PROG/PRG # 29

event 1 no. select

EV1 = 0
```

If the “0” (zero) value is not displayed, select “0” with “UP and DOWN ARROW” button then press and release the “SET/ENT” button ONCE.

14. Press and release the “SET/ENT” button ONCE to show the lower display:

```
MENU: PROG/PRG # 53

junction code select

JG = 0
```

If the “0” (zero) value is not displayed, select “0” with “UP and DOWN ARROW” button then press and release the “SET/ENT” button ONCE. This step ends the entering of segment number 1 that selected the target temperature and the time to reach this temperature.

15. Press and release the “SET/ENT” button ONCE to show the pattern and sequence numbers “0 1.02" in the upper display, and the lower display:

MENU:PROG/PRG # 24 target set point 1 TSP1 = [any value] °C

Notice the target setpoint is the same for the previous segment.

16. This begins segment number 2 where you usually set up a dwell or soak at the temperature achieved in the previous segment. Leaving the setpoint the same will create a dwell or soak for this next segment.
17. Repeat steps 10 through 15 to enter the additional segments needed to complete the desired profile.
18. To end the program leave the segment time value as a dash "-" only.
19. Press and release the “DISP” button THREE times to exit the programming

To run a stored program

1. It is important to review the alarm set point in the controller so the program would operate normally without exceeding this temperature setpoint.
    i. Press and HOLD the “SET/ENT’” button for at least three seconds to show in the lower display "PROG programming main menu".
    ii. Press and release the “UP ARROW” button to show in the lower display "AL alarm setpoint main menu".
    iii. Press and release the “SET/ENT” button to show in the lower display:

MENU:AL # 1 alarm 1 set point A1 = [any value] °C

    iv. If this alarm set point must be changed, use the “ARROW” buttons to change the value, and the “SET/ENT” button to enter the new value. Normally the alarm value is 10 °C HIGHER than the highest set point.
    v. To exit this display, press and release the “DISP” button TWICE.
2. If MAN (manual) indicator is illuminated, press and release the “MODE” button to display "MODE: AUT01" and with "changing!" flashing on the lower display. Press and release the “SET/ENT:” button once.
3. Review the lower display to identify the program pattern number.

```
SP : [any value] °C

PTNO: 0 SEGNO: 0/0

TM=------ RCY: 0/0
```

4. To select the appropriate program pattern number, press and release the “PT No” button to change and select the value after "PTNO:" on the lower display.
5. Press and HOLD the “RUN” button for at least two seconds. This will cause the "PRG" indicator to illuminate and start the program.

To stop or end a running program or program in hold

1. To stop or end a program that is currently running or in program hold, press and HOLD the “RESET” button for at least three seconds. This will cause the "PAG" indicator (and "HLD" if illuminated) to extinguish and the "RST" indicator to illuminate.

To put a program into a hold

1. To place a hold on a running program, press and release the “MODE” button to display "HOLD : ON" with "changing" blinking on the lower display
2. Press and release the “SET/ENT” button to select the hold. This will cause the "HLD" indicator to illuminate and t he "PRG" indicator to stay.

To take a program off of hold

1. To remove a program that is currently in program hold, press and release the 'MODE' butt on to display "HOLD: OFF" with "changing" blinking on the lower display.
2. Press and release the “SET/ ENT” button to release the hold. This will cause the "HLD" indicator to extinguish and the "PRG" indicator stay illuminated.

Additional selections that can be made in the programming mode include:

Ramp and hold the program

A simple or complex program can be designed to end in a program -initiated hold, which will maintain the temperature setpoint of the last segment.

This hold mode is established on the last segment with a time value. This segment is just prior to the last segment where no time value selected, which causes the program to end. AJC value of "1" is entered t o initiate this hold. See programming example # 1.

Repeating the program segments

The program pattern can have a portion of the pattern repeated for a specific number of cycles before completing the program profile.

See programming example # 3.

Here are three examples of actual programs that can be used as is or with the target temperatures and times modified.Review these with the pages on the controller operations and program pattern instructions to understand and the use these examples to their fullest extent.

Example 1: Ramp and hold

In the following program pattern the temperature will be raised to a target setpoint and placed in Hold Mode indefinitely, until released by the operator.

This is the program pattern graph:

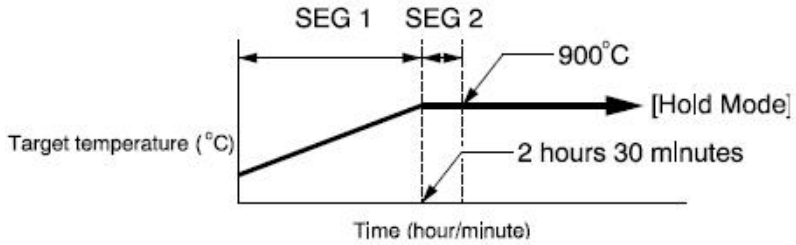

These are Example 1 program patterns values:

SEG (Segment number)	0	1	2	3
SSP1 (start setpoint)	25	-	-	
STC (start code)	-0	-	-	
TSP1 (target set point)	-	900	900	900
TIME (segment time)	-	2h30	0h01	--
EV1 (event identifier)	-	0	0	0
JC (junction code)	-	0	1	0

Notes:

The Hold Mode is established on the end of the second segment with JC = 1.

The third segment is used only to end the program pattern creation.

This pattern makes for a slower ramp rate than found on a single setpoint.

In the following program pattern a typic al series of ramps and dwells are used to achieve a temperature and ends in the Reset Mode for a natural cooling of the chamber temperature.

This is the program pattern graph:

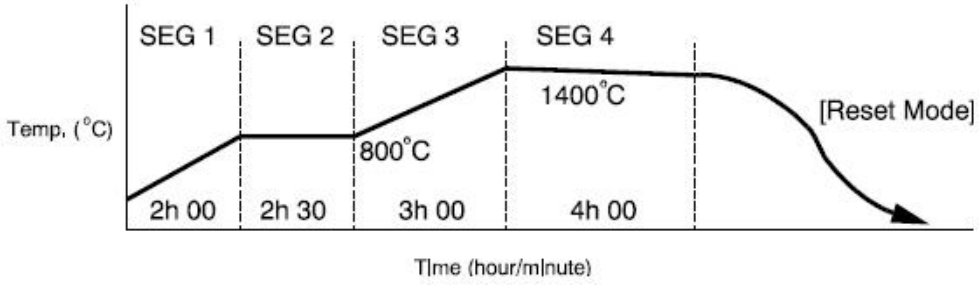

SEG (Segment number)	0	1	2	3	4	5
SSP1 (start setpoint)	25	-	-	-	-	-
STC (start code)	0	-	-	-	-	-
TSP1 (target set point)	-	800	800	1400	1400	1400
TIME (segment time)	-	2h00	2h30	3h00	4h00	
EV1 (event identifier)	-	0	0	0	0	0
JC (junction code)	-	0	0	0	0	0

Notes:

The Reset Mode is established on the end of the fourth segment with JC = 0.

The fifth segment is used only to end the program pattern creation.

In the following program pattern a simple ramp and dwell segment series is repeated to achieve a temperature variation several times within the same program, then ends in the Local Mode cooling the chamber temperature to the last local target set point. Review caution about ending with Local Mode.

This is the program pattern graph:

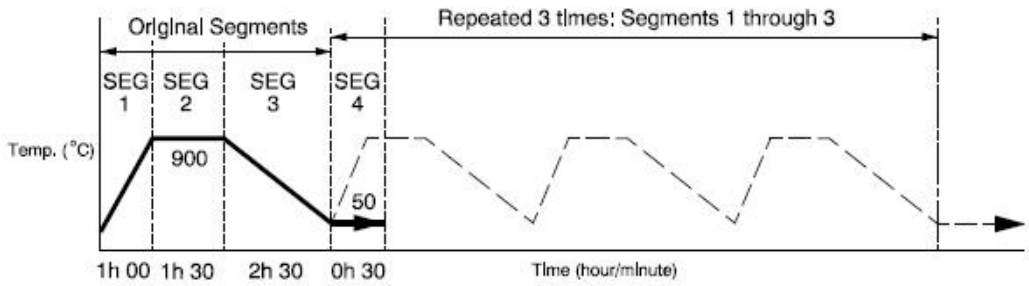

These are Example 3 program pattern values:

SEG (Segment number)	0	1	2	3	4	5
SSP1 (start setpoint)	25	-	-	-	-	-
STC (start code)	-1	-	-	-	-	-
RCY (repeat cycle)	3	-	-	-	-	-
RST (repeat start)	1	-	-	-	-	-
REN (repeat end)	3	-	-	-	-	-
TSP1 (target set point)	-	900	900	50	50	50
TIME (segment time)	-	1h00	1h30	2h30	0h30	
EV1 (event identifier)	-	0	0	0	0	0
JC (junction code)	-	0	0	0	2	0

Notes:

The Segment # 4 was used only to carry the instruction to end the segment in the Local Mode.

Segment # 4 is not used in the program until the repeats are completed; thus moving Segment # 4 to the end of the program.

Operation - UT150 Controller

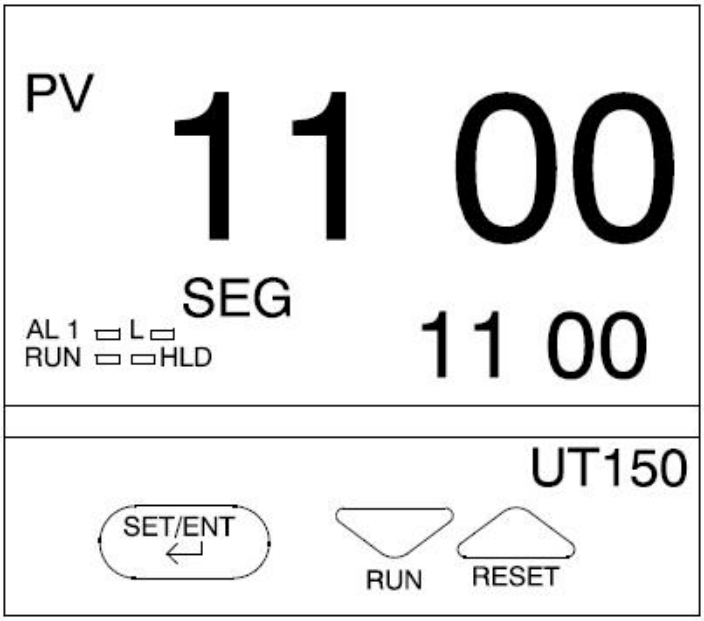

Figure 7. UT150 Control Panel.

The furnace temperature controller is configured and tuned at the factory to function well for most applications. Occasionally, it may be advisable to configure the temperature controller differently to suit a particular working environment or process.

		CAUTION Before reconfiguring the controller, read this chapter and the UT150 operation manual. Reconfiguring the controller can change the unit characteristics and design parameters, which can hamper performance and make the equipment dangerous to use.

		NOTE If the process temperature or load changes significantly another auto tune session may be necessary to optimize the chamber performance. Recording the values added to “P”, “I”, Avoid “D” from previous auto-tune section, would allow these values to be manually extend using Table 2.

UP150 Controller Overview

This version (V 54 & 56) of the UP150 controller features the dual operation modes of Single Setpoint and Programming. Each mode has distinct operations and uses.

Single Setpoint Mode allows the user to select a single target temperature setpoint in the controller. The controller will then operate the heating equipment until this setpoint value is achieved.

Programming Mode allows the user to enter a series of setpoint and time values.The controller will follow these sequences of instructions to energize the heating equipment until the entire sequence is complete.

The Temperature Controller senses the chamber air temperature of the furnace (the PV or process value) and supplies the heat necessary to achieve the desired setpoint. The controller includes an LED display and a push button keypad. Refer to “Table 2” and “Table 3” for lists of displayed parameters and keypad functions.

Table 2. UP150 Parameter Function.

Operating Parameters (access by holding the SET/ENT button)		
Parameter code	Factory set value	Description
MODE	Res	Model Selection
Prg	0	Program mode access. Select “1” to enter.
HoLd	oFF	Program Hold (RUN mode only)
Adv	oFF	Segment Advance (Run mode only)
CtL	Pid	Control mode
At	oFF	Auto tuning (Run mode only)
P	50	Proportional band (°C, °F=90)
I	240	Integral time
d	60	Derivatives time
Ct	30	Heat cycle time
FL	oFF	Sensor filter
bS	0.0	PV bias (offset)
Loc	0	Key lock
Setup parameter (access by setting LoC = “-1”)		
In	8	Input type (K Thermocouple)
SPH SPL	1500 0.0	High setpoint limit °C; °F =2732 Low setpoint limit °C; °F =32
tmU	0	Ramp Times Units,°Per minute (0=°Per Hour)
SC	ON	Super Function
dr	0	Direct/Reverse action

Table 3. Push Button Keypad.

Button	Function
SET/ENT	Pressing and holding the SET/ENT for three second advances the display to the Operation Parameters Menu. While in the Operation Parameters Menu, use SET/ENT to move from one parameter to next, and to register changes you have made in setpoint and parameter value. Holding SET/ENT for three seconds exits either the Operation or Setup Parameters menu.
△	Use the Up Arrow button to increase the temperature setpoint display and change parameter values in the Operation and Setup Parameter menus. Whenever you change the value of setpoint or parameter, the decimal point flashes to remind you to register the changed value with SET/ENT. While in program run mode, pressing and holding button stop (resets) program operation.
▽	Use the Down Arrow button to decrease the temperature set-point display and to change parameter values in the Operation and Setup Parameter menus. Whenever you change the value of a setpoint or parameter, the decimal point flashes to remind you to register the changed value with SET/ENT. While in program run mode, pressing and holding button stop (resets) program operation.

Single Setpoint Operation

The following sections describe how to operate the controller in single setpoint (local) mode. Use this mode when you only need to run the furnace with a specific setpoint and do not require a programmed sequence of steps - ORA Temperature change over a period of time.

Setting High Temperature Alarm Setpoint:

1. Press and HOLD for three seconds the "SET/ENT" button to display "modE rES".
2. Press and release the "SET/ENT" button to display "PrG 0".
3. Press the "UP/RESET" Button to show the lower display the display label "1".

4. Press and release the "SET/ENT" button to select this new value and advance to the "SSP 25" display, the beginning of the program mode.
5. Press and release the "SET/ENT" button until the High Temperature Alarm Setpoint value is displayed as "A1".
6. Select an alarm setpoint 10 °C above greater than the target setpoint to be selected.
7. Press and release the "SET/ENT" button to select this new value in the controller memory.
8. Press and HOLD for three seconds the "SET/ENT" button to exit this menu.

Accessing Local Mode

1. Press and hold for three seconds the "SET/ENT" button to display "modE rES".
2. Press and release the "UP" button twice to select the display "modE LCL".
3. Press and release the "SET/ENT" button once to select Local Mode. This selection causes the red indicator to illuminate beside "L" on the control panel. refer to Figure. 2 “Thermocouple”.
4. Use the "UP" and "DOWN" buttons to select the desired operating temperature setpoint.
5. Press and release the "SET/ENT" button once to register the setpoint value.
6. The display will then show measured temperature in the upper "PU" display, the present temperature setpoint in the lower display.
7. This display and the buttons will remain active as long power continues to the control module. Power interruptions will cause the controller to enter reset or standby mode in which no actions are made to operate the heating equipment.

You may use the arrow buttons to adjust the setpoint (lower) value to be adjusted in this local display mode, The "SET/ENT" button will register setpoint value changes, until these values are changed again.

Exiting Local Mode

To exit Single Setpoint or Local Mode and turn off the energy to the heater:

1. Press and bold for three seconds the "SET/ENT" button to display "modE LCL".
2. Press and release the "DOWN" button twice to select the display "modE rES".
3. Press and release the "SET/ENT" button once to select the display "modE rES". Reset Mode.This selection cause the red indicator to extinguish beside display the display label "L" that bad indicated the Local Mode.
4. This will change the display showing the measured the temperature in the upper display, with the lower display showing the Start Set Point (SSP) temperature setpoint of the program.

Programming Operation: Entering a Program

This section describes how to enter a simple program that is designed to:

- Direct the controller to ramp to a higher temperature;
- Stabilize;
- Ramp to a lower-temperature;
- End with an indefinite dwell.

If you intend to use the program features of the controller, it is advisable to go through all the steps in this sample program to familiarize yourself with the elements of programming mode.

		NOTE If the controller buttons are not pushed for 2 minutes, the controller will return to the regular operator mode/menu.

Entering Programming Mode

To access the programming menu:

1. Assure the indicators beside "RUN" and "L" on the controller display off. If either indicator is extinguished, press and hold the "SET/ENT" button until the display shows "mod", Select “rES" in the lower display with the "arrow" buttons. Press and release the “SET/ENT” button once.
2. Press the "SET/ENT" button for 3 seconds to display "modE" in the upper display and "rES" (Reset) in the lower display.
3. Press and release “SET/ENT” until "LoC" is displayed. Make sure the display below "LoC" is "0" (zero). If it is not "0", use “DOWN ARROW” to select "0" and press and release "SET/ENT” button to register the change to "0".
4. Press and release the "SET/ENT" button until "PrG" is displayed.
5. At "PrG" display, press the “UP ARROW” to make the lower display "1".
6. Press and release the "SET/ENT" button once to enter the programming menu.

Entering program Parameters

The first display is the Start Set Point parameter, shown as "SSP" in the upper display. The value assigned to SSP is usually the current room temperature, 25 °C.

On the next page is an illustration of the program profile and a table of the parameters entered.

Basic Ramp and Dwell Parameters:

1. Use the arrow buttons to select "25" in the below "SSP" display, then press and release the "SET/ENT" button twice to enter this new value for "SSP" is correct and does not need to be changed, press and release the "SET/ENT" button once to advance to the "StC" display.
2. Next is the Start Code parameter, shown as "StC" in the upper display. The value assigned to StC is usually "1". This will instruct the program to start with the current measured temperature. Start Setpoint Press the "SET/ENT" button to advance to next display.
3. The next parameter, “SP1”, is the first setpoint value that is desired in the chamber and is considered a ramp segment. Select this target temperature setpoint value with arrow button then press and release the "SET/ENT" button twice to enter this value and to advance to the "tM1" display. If the value for "SP1" is correct and will not be changed, press and release the “SET/ENT” button once to advance to the "tM1” display.
4. The next parameter, "tM1", represents the first time period for the unit to reach the target temperature setpoint selected in "SP1".This selection can be a value ranging from 0.00 to 99.59, which represents hours and minutes. Select this time value with the arrow buttons and enter it by pressing and releasing the "SET/ENT" button twice.
5. Press and release the "SET/ENT" button to advance to the next display of "SP2", this is considered the dwell segment. Select the same target setpoint temperature value as "SP1" with the arrow buttons. Press and release the "SET/ENT" button twice to enter this value and to advance to next display.
6. The next parameter, "tM2", represents the second time period used to maintain or dwell at the target setpoint selected in "SP2". This selection can be a value ranging from 0.00 to 99.59, which represents hours and enter it by pressing and releasing the "SET/ENT" button twice.
7. Next, "SP3" is the third setpoint value desires in the chamber. Select this target temperature setpoint with the arrow buttons and press and release the "SET/ENT" button twice to enter this value and release the "SET/ENT" button twice to enter this value and advance to the "tM3" display. If this value is correct and not changed, press and release the "SET/ENT" button once to advance to the "tM3" display.
8. "tM3" represents the third time period for the unit to reach the target setpoint selected in "SP3". This selection can be a value ranging from 0.00 to 99.59, which represents hours and minutes. Select this value with the arrow buttons and enter it by pressing and releasing the "SET/ENT" button.
9. The next parameter, "SP4" is considered the dwell segment. Select the same target temperature as "SP3" with the arrow buttons, then press and release the

"SET/ENT" buttons twice to enter this new value and to advance to next display.

Additional Program Parameters"

10. The next parameter, "SP4" is considered the dwell segment. Select the same target temperature as "SP3" with the arrow buttons, then press and release the "SET/ENT" button twice to enter this new value and to advance to next display. This operation ends the offer use of setpoint and time parameters.

11. The next display shows "EV1" in the upper display. The lower value should always be "0" (zero). Press and release the "SET/ENT" button once to go to next display.

12. “AL1” should always have a lower value "9". Press and release the "SET/ENT" button once to advance to the next display.

13. The next parameter, "A1", is used to select the high temperature alarm tri setpoint.
    Use the; arrow buttons to select a value 10 °C (or 20 °F) higher than the highest target setpoint to be used. Select the High Temperature Alarm value with the arrow buttons then press and release the “SET/ENT” button twice to enter this new value and to advance to the "HY1" display. If the value for "A1" is correct and not changed, press and release the “SET/ENT” button once to advance to "HY1" display.

14. "HY1" is used to select the amount of temperature change below the high temperature alarm relay will reset, this value is usually "1". Select "1" with the arrow buttons and press the "SET/ENT" button <u>six times</u> to enter the correct value and advance to the "JC" display. or if the value is correct, press the "SET/ENT" button <u>five times</u> to advance to the "JC" display.

15. For the parameter displayed as "JC", select “1” with the arrow buttons, then press and release the "SET/ENT" button twice to display "WTZ", Selecting the value of "1" will cause the program to hold the setpoint at this last segment. A value of "0" would cause the program to reset and stop running the program and step the power to the hearers. A value of "2" will cause the program to repeat "continuously". A value of “3" will cause the controller to maintain temperature at the local (single) setpoint value.

16. When the display shows "WTZ", select a lower display value of "OFF” with the "arrow" buttons. Press and HOLD the "SET/ENT" button for 3 seconds to return to the Reset or standby display.

This concludes the steps required to enter a typical ramp- and dwell program. On the next page is an illustration of program profil and a table of the parameters entered.

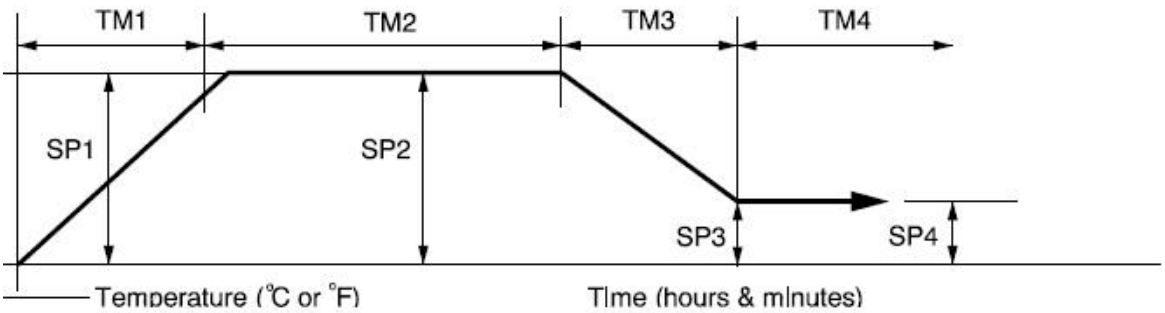

Figure 8. Ramp and Dwell Graph

In the table below, “*” denotes values typically set by user according to needs of program.

Parameter	Values	Meaning
PrG	0	Enters program menu
SSP	25	Start Setpoint
StC	1	Start Code
SP1	*	Segment 1 Setpoint
Tm1	*	Line length for Segment 1
SP2	*	Segment 2 Setpoint
Tm2	*	Line length for Segment 2
SP3	*	Segment 3 Setpoint
TM3	*	Line length for Segment 3
SP4	*	Segment 4 Setpoint
Tm3	oFF	Time length for Segment 4
EV1	0	Event 1
AL1	9	Alarm 1
HY1	1	Hysteresis for alarm 1
EV2	0	Event 2
AL2	oFF	Alarm 2

AL2	oFF	Alarm 2
JC	1	Junction code (1=dwell; 0=stop 2= repeat, 3= Repeat to local Setpoint at the end of program.).
wtz	oFF	Wait Zone

Running a Program

To run a program such as the one outlined above, press and hold the "DOWN/RUN" button making the "RUN" indicator illuminate. At the end of this program the "HLD" (hold) indicator is illuminated to indicate this program is in the indefinite dwell at the last target temperature. This hold indicator is caused by the "JC" selection of "1", while the "JC" selections of "2" or "3" will not illuminate the "HLD" (hold) indicator.

Ending a Program

To end a program while in the "RUN" at "HLD" (hold) mode, press and hold the "UP/RESET" button to turn off the current program and extinguish the "RUN" or "HLD" indicator.

Turning off the unit's power will also stop the program. When power is restored, the controller is in the Reset or standby mode with no power to the heaters.

		NOTE The programmer/controller will not operate the Unit's heaters (to change or maintain a temperature) unless there is a program running or a single setpoint value is selected in the Local Mode. This Controller details to the "RESET" (rES) mode with each power "ON". If power supply is introduced during program run or single setpoint mode, these action operation mode must be reselected.

Using the Hold Function

To hold a running program:

1. Press and hold the SET/ENT key for 3 second, "noDE" will appear in the upper display. Press SET/OUT key to "Hold".

2. Press the "arrow up" key so that "on" with flashing decimal appears in the lower display.
3. Press the SET/ENT key to accept.
4. Press and hold the SET/ENT key again to return to the normal display.

To stop the hold mode:

Press and hold the SET/ENT key for 3 seconds. "noDE" will appear in the upper display.Press SET/ENT key to "Hold". Press the "arrow down" key so that "oFF" with flashing decimal appears in the lower display.Press the SET/ENT key to accept. Press and hold the SET/ENT key again to return to the normal display.

Using the Advance Function

Introduction:

This section describes the sequence to advance or skip segment in a routine program. This is useful if a power out occurred and the program needs to be advanced, skipped procedure already computed.

While the program is running, press and hold the "SET/ENT" key for 3 second. "node" will appear in the upper display. Press the “SET/ENT” key again and "AdV" will appear in the upper display. "oFF" will appear in the lower display.Press the "arrow up" key so that "on" with flashing decimal appears in the lower display. Press the “SET/ENT” key to accept. The controller will automatically return to the normal display and the increment the program segment by one.

Changing a Program

To make changes only to the target temperature and segment length times for simple program operation, follow these steps:

1. Assure the indicators beside "RUN" and "L" on the controller display are extinguished.. If either indicator is illuminated, press and hold the "SET/ENT" button until the display shows "mode", Select "Res" in the lower display with the "arrow" buttons. Press and release the "SET/ENT" button once.
2. Press the “SET/ENT” button for 3 seconds to display "mode" in the upper display and "rES" in the lower display. Press and release “SET/ENT” repeatedly to display "LoC". Make sure the value below "LoC" is "0" (zero). If it is not "0", use “DOWN” arrow to select "0" and press and release "SET/ENT" button to register the change to "0".
3. Press and release the “SET/ENT” button once to show "PrG" on the upper display.
4. Press the "UP" arrow to make the lower value "1".
5. Press and release "SET/ENT" button twice to display "SP1" Using the arrow buttons to revise the target setpoint.

6. Press and release "SET/ENT" button twice to display "tml”. Using the arrow buttons to revise the segment time length needed to get to the target setpoint “SP1”.
7. Press and release “SET/ENT” button to display other setpoints and segment time lengths. Use the arrow buttons to change the temperature set points and time lengths. Press and release the “SET/ENT” button to register any new values.
8. Press and HOLD the “SET/ENT” button for 3 seconds to exit the program menu and return to the reset or standby display.

Auto Tuning the UP150 Controller

Auto tuning maximizes the performance of the chamber at a selected temperature with the product load's characteristics, by operating with the quickest response and minimal temperature overshoot.

Factory settings are for general purposes, but your process can be enhanced through the auto tune feature. To obtain this maximum performance, follow these steps to auto the controller.

1. Load the chamber with materials that have the same mass and thermal characteristics as an actual product load.
2. Operate the chamber to the process temperature using either locator run mode.
3. Start the Auto Tune: Press and hold the “SET/ENT” button for three seconds to display the "modE" parameter of the Operating Parameter menu.
4. Press and release the “SET/ENT” button five times to advance to the "At" parameter.
5. Press and release the “UP” arrow button to show "on" in the lower display.
6. Press the “SET/ENT” button once to enter the auto tune mode and exit the Operating Parameters menu.
7. The controller will cycle three times through a heating and cooling pattern, measuring the characteristics of the load and chamber temperature controls. During the auto tuning, “At” will alternately flash with the measured temperature (PV) display to indicate that the auto tuning progress. The length of time for the auto tune vanes with the load, chamber size and temperature selected.
8. The auto tune is completed when the regular display of the measured temperature is shown without the "At" value flashing. The chamber should now

operate to the process temperature with the given product load, with the quickest response and minimal temperature overshoot.

		NOTE If the process temperature or load changes significantly another auto tune session may be necessary to optimize the chamber performance. Recording the values added to "P", "I", Avoid “D” from previous auto-tune section, would allow these values to be manually extended using Table 2.

Temperature Offset Procedure

The purpose of this procedure is to create an offset in the displayed temperature measurement for the Yokogawa model UP150 temperature controller.

1. *outside of the process tube, operate the oven or furnace chamber to your normal stable temperature setpoint, which an independent temperature measurement setpoint, with an independent temperature measurement device located in the center of chamber. The controller will be “running” the program or operating in the local mode to maintain the temperature.*
2. Note any difference in the controller's measured temperature (upper value) UV and the independent measurement. If a difference of greater than 1°C is noted proceed with the following steps. If less than 1 °C, no change.
3. Press and hold the "SET/ENT" button for 3 seconds to display "modE"
4. Verify the button lockout parameter will give access to make this display offset. Press and release the "SET/ENT" button twelve times to display "LoC". The value 0 (zero) displayed will give full access and is necessary to make the display offset changes desired. If the value displayed is 1 or 2, use the "down arrow" button to make 0 (zero) press release the "SET/ENT" button to register this change.
5. Press and release the "SET/ENT" button twelve times to display "bS" and the current offset value.
6. Allocate the offset value and select with the arrow buttons that is needed to make this controller display correctly. For example, if the independent measurement is 553 °C, the controller Temperature measurement display shows 550 °C, and the current controller offset (bS) is -2, then make controller display offset "+1" [(+3 needed offset) + (-2 current offset) = (+1 new offset)].
7. Press and release the "SET/ENT" button once to register this new offset value. Press and hold the "SET/ENT” button for 3 seconds to exit this controller menu.

8. Operate the controller to the same temperature to stabilize the chamber to check for any further variations between the controller and the independent measurement. Repeat steps 2 - 7 as necessary.
9. This completes the display offset procedure for the Yokogawa model UP150 temperature controller. If the bottom lockout parameter "LoC" was originally on a value of 1 or 2, repeat steps 3 & 4 to return to this original value.

Contact Technical Service at 1-866-984-3766 if you have any questions.

Changing Temperature Scale Between °C and °F

To change the temperature scale in the UP150 controller to operate on °F instead of the factory setting of °C, or from °F to °C, Follow these steps.

These change will alter the controller input type and associated scale-dependant parameters, and erase the stored program to default values. Please document the stored program in the controller before proceeding.

If during this procedure the buttons are inactive for more than two minutes, the controller will return to the standard display.

1. Assure the indicators beside "RUN" and "L" on the controller face are extinguish. If they are illuminated press and hold the “SET/ENT” Button to display "nodE". Select "YES" with arrow, press “SET/ENT” button to make the RUN or L indicator extinguished.
2. To access the Operating Parameters Menu, press and HOLD the “SET/ENT” button for at least 3 second to display "modE".
3. Press and release the “SET/ENT” button until the display shows "LOC" in the upper display. Make sure the value below "LaC" is "0" (zero). If it is not "0" use “down arrow” to make "0" and press and release "SET/ENT” button to register change to "0".
4. At "LoC" display, press the “down arrow” to make the lower value "-1".
5. Press and release the "SET/ENT” button to enter the Setup Parameters menu and show "In" on the upper display and a numerical value in the lower display.
6. See table below for the STANDARD values for this parameter and the others needed in the following steps.
7. Select the appropriate value for the "In" parameter. Press the “UP” or “DOWN” arrow buttons to make the lower display to the new value, then press and release the “SET/ENT” button TWICE to register the new value and advance to the next parameter.
8. "SPH" is the next parameter displayed. Select and enter the new value, then press and release the “SET/ENT” button TWICE.
9. "SPL" is the next parameter displayed. Select and enter the new value, then press and release the “SET/ENT” button ONCE.

10. Press and HOLD the “SET/ENT” button for at least 3 seconds to exit.
11. Press and HOLD the “SET/ENT” button for at least 3 seconds to enter the Operating Parameter menu and show "modE" in the upper display.
12. Press and release the “SET/ENT” button until the upper display shows "P". Select the value in the table and adjust the lower display accordingly. Press and release the “SET/ENT” button TWICE.
13. “I”is the next parameter displayed. Select and enter the new value then press and release the “SET/ENT” button TWICE.
14. “d” is the next parameter displayed. Select and enter the new value then press and release the “SET/ENT” button ONCE.
15. Press and HOLD the “SET/ENT” button for at least 3 seconds to exit.
16. Recenter or create a program using the new temperature scale.

The following table shows the corresponding parameters value for 1100 °C for furnace in °C and °F.

Parameter	°C	°F
In	8	38
SPH	1500	2732
SPL	0	32
P	50	80
I	240	240
D	60	60

The P, I, D parameters may be altered through auto tuning (refer to Section **“Auto Tuning the UP150 Controller”** Chapter UT150 Controller Operation).

Excess Temperature Option-UP550 (“P”Models)

The following instructions are very basic and meant to provide the minimum amount of information to get you started. Please read the UP550 Short Form Instruction the capabilities of this control.

UP550 Controller

The UP550 temperature controller is a microprocessor-based PID-type controller that can store up to 30 programs (programs are also referred to as patterns) with up to 99 segments each program or a total of up to 300 segments. In addition to operating as a programmable controller with "ramps and dwells", it can also operate as a single setpoint unit in the LOCAL mode.

First, you will need to be informed about the various modes of operation that are available. The green LED next to the lower display shows the mode the control is in at any given time.

* PRG - Program mode. A pattern is being executed by the control. Refer to Section “Program Mode Operation”

*RST - Reset Mode. In this mode, all outputs are off except for alarm outputs. This mode is accessed by holding down the Reset key for 2 seconds. When a pattern has completed running, the controller goes to the Reset mode.

*HLD - Hold Mode. This mode is accessed only when a pattern is running. The Hold mode freezes the program clock. It is accessed through the Mode key.

* LOC - Local Mode. This mode allows the controller to operate in a "steady-state" mode where a single setpoint is maintained continuously. Refer to Section “Local Mode Operation”.

*MAN - Manual Mode.

		WARNING Manual mode allows the user to set a control output manually and prevents the unit from controlling temperature. This mode should only be accessed for troubleshooting purposes.

When the MAN indicator light is extinguished the control is in the Automatic mode. Return to Automatic mode by pressing the MODE key until "MODE: AUTO1" appears with the flashing word "changing!". Press the SET/ENT key. When entering and exiting the manual mode, the following message will be displayed:

		DANGER MANUAL MODE OPERATION IS UNSAFE. RETURN CONTROUER TO AUTOMATIC MODE!

Program Mode Operation

A program pattern setup table should be filled in prior to entering a pattern. Make several copies for your use.

		NOTE Software is available to make entering a pattern into the UP550 much easier. Also an infrared interface device that snaps onto the front panel of the control, known as a "light loader", is available which uploads and downloads information to the UP550. The light loader will function whether or not the controller has the digital communications option.

To enter a pattern into the UP550, proceed as follows. Whenever you change a value, be sure to press SET/ENT to register the change.

1. Hold the SET/ENT key down for 3 seconds. PROG will appear in the lower display.
2. Press the SET/ENT key again. LOC will appear.
3. Press the up arrow key and PRO will appear. Press the SET/ENT key and the control is now in the programming or “pattern entry” mode.
4. PTN = 1 will be displayed. This means “Pattern 1” is being is being configured. Note that pattern I has already been entered at the factory for test purposes.

This pattern may be reconfigure or you may select any pattern number between 1 and 30 using the up/down arrow keys. If another pattern number is selected, the word “changing” will appear flashing. The SET/ENT key must be pressed to register the change.

5. Press SET/ENT and “SEG = 0” will appear. This allows you to select any segment of the program for editing.
6. Press SET/ENT and "SSP1 = 25.0øC" will appear. This is the "starting setpoint" for the pattern and it is typically set at ambient temperature.
7. Press SET/ENT and "STC = 0" will appear which stands for "start code". Leave this setting at "0".
8. Press SET/ENT and "TSP1 = (value)" appears which means "target setpoint 1". Enter the first setpoint here.
9. The next value that appears is "TIME = 0h00" which means "no hours and no minutes". Enter a time in hours and minutes for the first segment time. This value represents the time it will take the controller to change the setpoint from the "starting setpoint" to "target setpoint 1".
10. Press SET/ENT and "EV 1 = 0" appears which means. "event 1 is not used". Leave this value at "0".
11. Press SET/ENT and "JC = 0" appears which means, "Junction Code". Leave this value at "0".
12. Continuing to press the SET/ENT key will enter values for subsequent segments. Notice the setpoint already entered is the next segment which is equal to the setpoint of the previous segment. Leaving the setpoint the same will create a "soak" segment. Changing the setpoint will create a "ramp" segment.
13. Continue entering segment information until the pattern is complete. When the segment time is left as a dash (-), it informs the control that the pattern is complete.

Use the DISP (Display) key to back out to the main menu.

Local Mode Operation

To operate the UP550 controller in the LOCAL mode, proceed as follows:

1. From the RESET mode (RST light is illuminated on front panel), press the MODE key once.
2. in the lower display, you will see "LOC: ON" with the word "changing" flashing. Press the SET/ENT key.
   The LOC light is now illuminated indicating you are in the LOCAL mode.
3. Use the up and down arrow keys to enter a setpoint. Press the SET/ENT key to register the setpoint.

4. While in the local mode. it is recommended to enter an alarm value. The alarm value should be approximately 10 °C above the setpoint. To enter an alarm value, bold the SET/ENT key down for 3 seconds.
5. PROG will appear in the lower display. Press the "up arrow" key once. "AL” will appear. Press the SET/ENT key once then enter the alarm value using the up/down arrow keys. Press the SET/ENT key to register the alarm value.

To shut off the control's output, place the unit in RESET mode by holding down the RESET key for 2 seconds.

Excess Temperature Option (“B” Models)

he Excess Temperature Option, when installed, provides an additional, independent temperature control system to help protect products from excess temperatures.

Read this section carefully before using this option.

Control Display

When the Excess Temperature Controller (Mode UT150) is first turned on, it displays only the excess temperature setpoint in the bottom display. Press and release the SET/ENT button to show the duration time of the last excess temperature incident. (See Exceeded Temperature Duration Timer Section.)

Press and release the SET/ENT button once again to show the peak temperature measured for the last excess temperature incident.

Pressing and releasing the SET/ENT button once again shows the current temperature measured by the controller in the top display; this may differ slightly from the main temperature controller. The value shown in the bottom display is the current excess temperature setpoint.

Pressing and releasing the SET/ENT button again cycles back to the first display, of the SET/ENT in lower display.

Excess Temperature Option Features

1. Exceeded Temperature Duration Timer

   The Exceeded Temperature Duration Timer measures the time that the setpoint is exceeded (and power to the heater was interrupted) until the hysteresis value is reached as the chamber temperature cools. This time indicates when the chamber temperature exceeded the Excess Temperature setpoint.

2. Peak Exceeded Temperature

   The Peak Exceeded Temperature is the highest temperature measured by the Excess Temperature Controller.

Operating Parameters

1. Excess Temperature Setpoint

   The Excess Temperature setpoint is typically set about 10 °C (18 °F) above the planned operating temperature of the chamber, or to the maximum temperature the product or process could tolerate.

   The Excess Temperature setpoint is selected by holding the SET/ENT button for three seconds to show “SP” in the top display and the current setpoint in the bottom display. Adjust the setpoint with the arrow button and press the SET/ENT to register the new setpoint.

2. Hysteresis

   Set the hysteresis ("HYS") of the Excess Temperature Controller to effectively use the Duration Timer feature.This value is usually 80% of the temperature difference between the Excess Temperature setpoint and the chamber operating temperature.

   For example. with an Excess Temperature setpoint of 1220 °C and chamber operating temperature of 1180 °C, set the hysteresis to 32 °C.

   The hysteresis also controls the indicator is extinguished and the Excess Temperature Controller can be reset.

   Exit the Operating Parameters by holding the SET/ENT button for three seconds.

Excess Temperature Controller Operation

After the Excess temperature Setpoint and Hysteresis values are selected, the controller is ready for operation.The setpoint and hysteresis should be reviewed and adjusted if necessary, when the main controller setpoint is changed.

During an excess temperature incident, the “EXCEEDED” and “OUT” indicators are illuminated on the controller display area when the setpoint is tripped. The “EXCEEDED” indicator will stay illuminated while the temperature cools to the hysteresis amount, then turn off.

When the “EXCEEDED” indicator is extinguished, the Excess Temperature Controller can be reset holding the “up arrow/reset” button for one second when the normal operating display is showing the current measured temperature and the setpoint or just the setpoint.

The Exceeded Temperature Duration Timer and the peak Exceeded Temperature can be viewed either before or after the controller is reset. These are viewed on the controller display when the SET/ENT button is pressed and released, with the "tIn" or "HI" in the top display. These values will be erased from the display and memory when the "up arrow/reset" button is pressed during their respective display (add the "EXCEEDED" indicator is off).

Loss of power to the Excess Temperature Controller will not change the setpoint or hysteresis value. However, the last recorded Exceeded Temperature Duration Time and peak Exceeded Temperature will be lost.

In some inspires, the “OUT” indicator is illuminated without a high temperature event. In this “TRIPPED OUT MODE”, the power to the heating element is introduced.

A source failure (indicated with "0.0" in the upper display) will cause "OUT" illuminated.

A power failure, in some instances causes "OUT" to be illuminated.

As lost as the "EXCEEDED" indicator is extinguished, the UT150L can be reset with press and hold of "UP ARROW/RESET" button.

Communication Option

The Communication Option enables digital communication between the UT150 or UP550 controller and a PC. It is a factory-installed temperature controller and cable assembly using an RS-485 connection through a DB9 cable.

This option is supplied with the necessary cable and diagnostic software to set up and check the connections between the unit and the PC. Follow the steps below to make the cable connections and to check the data transfer. If you have purchased the “SpecView Plus Communication Software” with the copy protection key, refer to the SpecView instructions in parallel with this setup outline.

Cable Installation

1. To install the 25-foot external cable, disconnect the electrical power from both the unit and PC.
2. Connect the cable end with a black housing to the 9-pin port on the rear of the Thermo Fisher Scientific unit.
3. Connect the other cable end with the RS-232/485 Converter to the COM 1 Port (or other COM port of your choice) on the rear of the PC.
4. If you have purchased the Spec View Plus Communication Software with the copy protection key, install this key on your parallel port. It may be necessary to locate the key between a cable and the parallel port.
5. Apply electrical power to the unit and the PC.

UT150 Communications Setup Parameters

Table 4. **“UT150 Communication Parameters”** shows the default values for UT150 and UP 550 Communications Setup Parameters. To access these parameter:

1. Hold the SET/ENT button for three second to display the Operating Parameters. Press and release the SET/ENT button to display the “LoC” parameter. Assure lower value at “ø”. Press the down arrow to show “-1” in the lower display and press SET/ENT to acknowledge and enter the Setup Parameter menu.
2. Press and release the SET/ENT button to access the six parameters specific to communication option.

Table 4. UT150 Communication Parameters

Parameter Code.	Factory Set Value	Description
Communications Setup Parameters		
PSL	0	Protocol selection
Adr	1	Controller address
bPs	9600	Baud rate
Pr1	EVN	Parity (even)
StP	1	Stop bit
dLn	8	Data length

Software Installation

1. Load the SpecView software onto the PC hard drive, using the disks provided.
2. Run the software. (If you have purchased the SpecView Plus Communication Software with the copy protection key, Skip step 3.)
3. If you do not have a copy protection key. a “SpecView” window opens with the message, "Problem with Dongle: “Dongle” (Copy Protection Key) not detected on parallel port." Click the OK button to acknowledge the message. Without the copy protection key, this diagnostic/sampler software has a 20-minute time limit on each run. If the message “demo version of SpecView has stopped communicating - value are frozen” appears before the communication diagnostics/sampler are finished, close the software and reopen it for another 20-minute segment.
4. When the “Configuration Founds..” windows opens, click on the “Test Comms for New Config”. Button.
5. The “Input Required..” window then opens. Enter a new Config. Name (up to 8 characters with no spaces) or accept the “DEFAULT” name. Click OK.
6. The “Port and Protocol” window opens next. On the “COM1:” line (if the COM1 port is the serial port used to connect to the port controller) select the pull down menu from protocol column. Highlight "*Need to identify the proper/accurate selection from the current Communications Software “for controller mode UT150.
7. Select the pull down menu from the Baud Rate column. Highlight "9600". Click on the “Start Scan” button.
8. The SpecView program scans all 99 possible controller addresses and places a representative “Instrument View” of the temperature controller on the PC Screen for each controller found connected to PC. The factory-set addresses

are 1, 2, 3, ets.depending on the number of controller's address to be changed. See Section “Addresses for Multiple Controller” on page 8-4 for detailed instructions on configuring multiple controllers.

9. After the instrument scan is completed, a SpecView window appears with the message, "All channels scanned. Press OK to continue, or cancel to rescan". Press OK if all of the connected controllers are properly displayed. If no controls are displayed, check the "Troubleshooting" section at the end of this setup.
10. To begin communication between the PC and the controller, click on the “Enter Runtime” button (an icon of a running figurine). This action will ask for a file name to save this display: use the given default or select another.
11. The "Spec View" window will be displayed, showing the current PV (process variable) and SP (set point). If the SpecView display of the controller shows X's, the communication connection or power to the control may have been interrupted.

Communications Test

When you have established a working communications link between the controller and PC, you should check the link by varying the target set point function:

1. Click on the arrows of the controller(s) shown in the SpecView window. This will open a keypad window where the set point can be changed.
2. Select a temperature set point a few degrees from the current temperature and press the “send” button. Verify that the controller display shows the setpoint change.
3. Select the original temperature set point through the keypad on the controller and observe the change on the PC display.
4. The controller parameters may be viewed through SpecView by clicking on the “PAR” button. A window opens that lists the controller parameters. Each parameter can be changed by selecting it and clicking on the “Alter" button. Select the “Close” button. Make no changes at this time.

This concludes the initial software diagnostics.

??? Unit must havefactor installed countour containing assitionnal board for communication operation, fild upgrade required of new countour with comm board, hairless, almost with exterior cable and specieview.

Troubleshooting

If your connection is not working properly, check the following conditions:

A. verify complete and tight cable connections between the Thermo Fisher Scientific unit and the pc.

B. verify that power has been supplied to the unit and temperature controller before starting the software program.

C. verify the configuration values in the controller, listed in the Table 4. “UT150 Communication Parameters”).

D. verify the values in the “ports & protocols” window (see step 6 in Section “Software Installation”).

Decimal Point Adjustment

If the decimal point on the PC display of the controller does not match the controller display, you can make an adjustment to correct this:

1. From the Configuration Mode (available through the “file” drop down while in the Runtime Mode), select the “Variables List” icon, represented by a page with lines on it.
2. Select the controller model number and select “Properties” button. The “Add/Rename Instrument” box appears.
3. In the Address window, highlight the middle digit (usually a 1), and change to “0” (zero).
4. Click the “Rename Only” button. Close the “Variables” box (click on “X” in corner of smaller box).
5. Select the “Enter Runtime” icon to see the results of the change.

Addresses for Multiple Controllers

When more than one controller has the same communication address, alternative addresses need to be set up in the individual controllers. Addresses 1 through 99 can be selected on The same communication link to each PC COM port.

1. Determine a unique address for each temperature controller equipped with the communication option.
2. On the UT150 controller, access the Operating Parameters menu by pressing and holding SET/ENT for 3 seconds.
3. Press and release SET/ENT repeatedly until the upper display reads LoC.
4. Press ▽ until the displayed value of LoC is - 1, then press SET/ENT to access the Setup Parameters menu.

5. Press and release the SET/ENT button to access the six parameters specific to the communications option. Compare the displayed values to those in Table 4. “UT150 Communication Parameters”. Make adjustments to the Adr parameter as needed.
6. Press and hold SET/ENT for 3 seconds to exit the Setup Parameters Menu.

Loss of power to the Excess Temperature Controller will not change the setpoint or hysteresis value. However, the last recorded Exceeded Temperature Duration Time and peak Exceeded Temperature will be lost.

Maintenance

General Maintenance

		CAUTION Maintenance should only be performed by trained personnel.

		WARNING Disconnect console from main power before attempting any maintenance to console or its controls.

		WARNING Before maintaining this equipment, read the applicable MSDS (Material Safety Data Sheets) in the safety notes.

		⚠ WARNING When installing, maintaining, or removing the fiberglass Insulation, the following precautions will minimize airborne dust and fiber: • Keep personnel not involved in the installation out of the area. • Use a good vacuum to clean area and equipment. Use a dust suppressant if sweeping is necessary. Do not use compressed air. • Use a disposable mask suitable for nuisance dust. • Wear long sleeve clothing, gloves, hat, and eye protection to minimize skin and eye contact. Do not wear contact lenses. • Thoroughly wash self after work is complete. • Launder work clothing separate from other clothes and thoroughly clean laundering equipment after use. If clothing contains a large amount of dust and/or fiber, dispose of rather than clean. • Promptly place used fiberglass parts and dust in plastic bags and dispose of properly.

Heating Elements

The heating units are rated for a maximum of 1200 °C. They will resist attack from most corrosive agents. High concentrations of atmospheres or chemicals which may have corrosive effects on the ceramic fiber are sulfates, chlorides, fluorides, alkalis, and vanadium. Please contact Thermo Fisher regarding questions on the effect of specific atmospheres on your furnace performance.

High concentrations of volatile materials being burnt off in the furnace may reduce heating element life. Proper venting of the volatiles is essential.

After prolonged use, hairline cracks may develop in the insulating materials. Minor cracks will not affect furnace performance.

Care should be taken when working with or handling the heating units, as the ceramic fibers and dust particles are a possible eye/skin/lung irritant. Refer Section **“Safety Notes”**.

Heating Unit Replacement

Replacement of the heating units requires partial disassembly of the furnace. Two persons may be required for parts of the procedure. Allow adequate work space for the disassembly.

1. Be sure to disconnect all power to the furnace.
2. Remove the outer panels of the furnace by removing the appropriate hex-head screws.
3. Remove the thermocouple and the power wires/connecting straps from the heating elements at the rear of the furnace.
4. Open furnace door slightly. Disassemble the chamber frame starting from the top rear and working toward the base. The front supports do not have to be removed. The heating elements can then be pulled back and out of the remaining front support brackets.
5. A gasket made of ceramic fiber blanket is located between the two heating units. This material should be retained and used with the replacement heating units.
6. Install the replacement heating units in the frame and reverse the above procedure to reassemble the furnace.

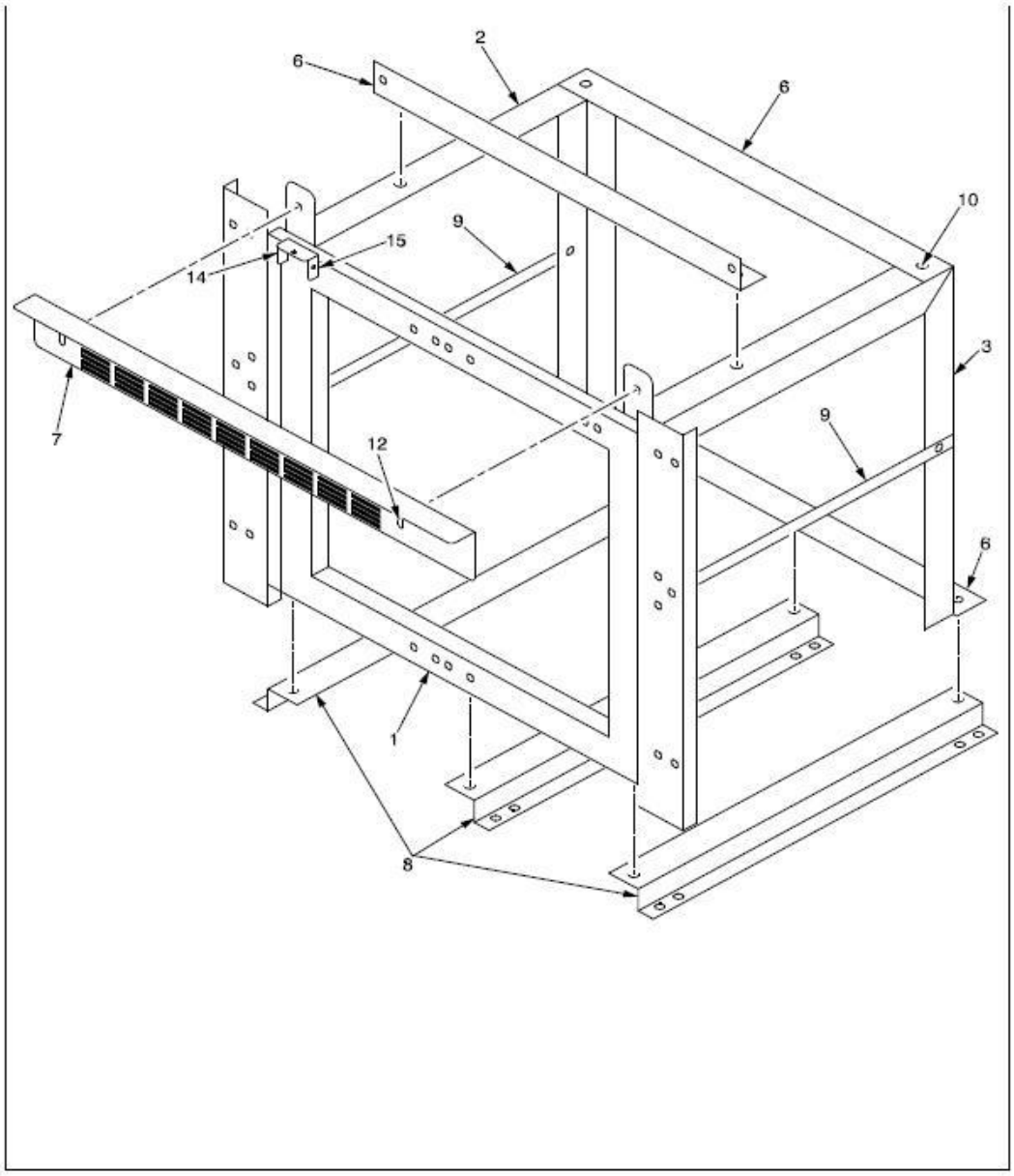

Figure 9. Heating Unit Replacement

Thermocouple (T/C) Replacement

To replace the thermocouple:

1. Disconnect power to the furnace.
2. Remove the back panel of the furnace by removing the appropriate eight hex-head screws.
3. The thermocouple is located in the upper left hand corner of the rear of the furnace. Note location and color of the thermocouple and lead wires. Remove

1. Disconnect power to the furnace.
2. Remove the back panel of the furnace by removing the appropriate eight hex-head screws.
3. The thermocouple is located in the upper left hand corner of the rear of the furnace. Note location and color of the thermocouple and lead wires. Remove the mounting and connection screws. Carefully pull the thermocouple assembly out of the furnace chamber.
4. Replace the cylindrical thermocouple section with the new section. Put the thermocouple assembly back into the furnace chamber. Fasten with the mounting screws and reconnect wires. Refer to Figure **"Wiring Diagram"** for proper wire connections.
5. Replace the back panel.

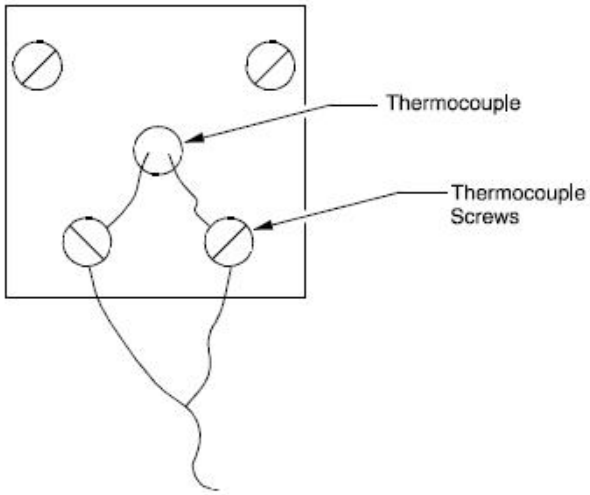

Figure 10. Thermocouple

Solid State Relay (SSR) Replacement

To replace the solid state relay:

1. Disconnect power to the furnace.
2. Remove the left side panel (facing front) to provide access to the SSR assembly.
3. Note positions of the wires on the SSR. Disconnect the wires and remove outer screws. Remove the heatsink and SSR from the furnace.
4. Remove the SSR from the heat sink. Replace with the new SSR and reverse the above procedure for reassembly.

Door Insulation Replacement

To replace the door insulation:

1. Disconnect power.
2. Open furnace door.
3. Loosen the screws holding the upper and lower door insulation brackets in place. The screws do not need to be removed.
4. Pull the door insulation out of the support brackets. Insert new insulation and reassemble the support brackets.

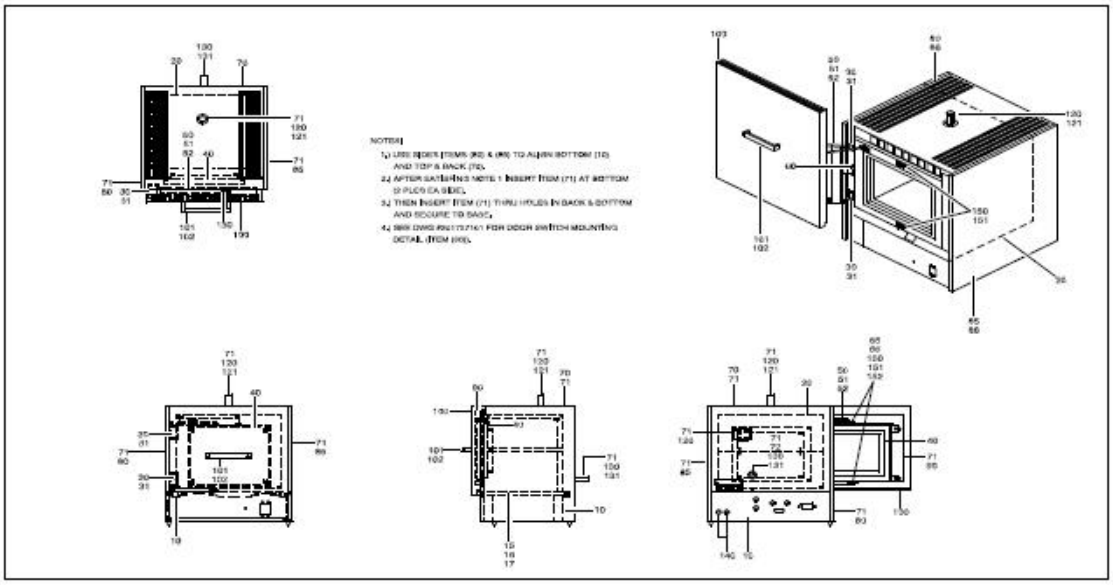

Figure 11. Door Insulation

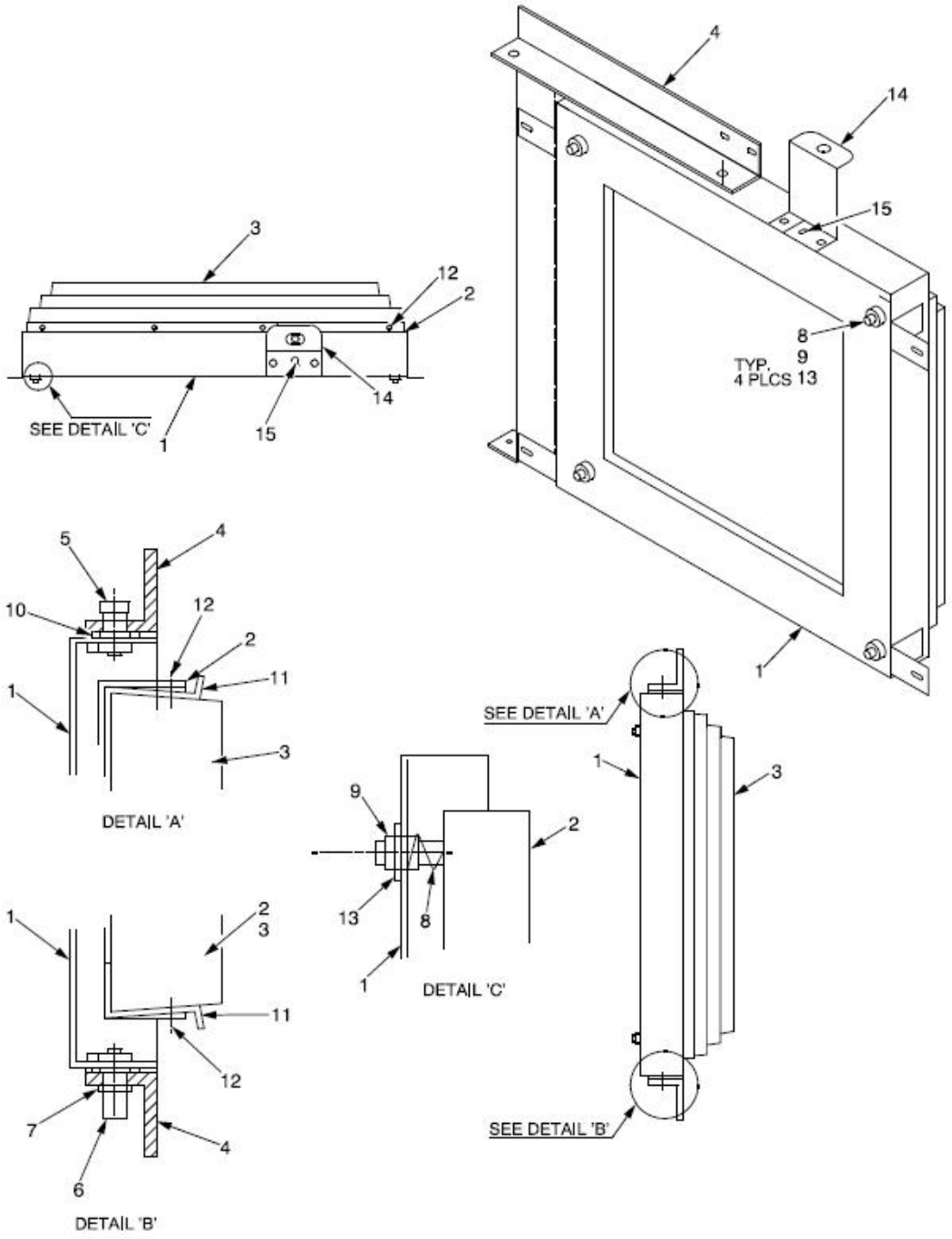

Figure 12. Door Insulation Replacement

Right Hand Door Conversion

The furnace door can easily be converted to a right hand swing door as fallows:

1. Open and support the furnace door. Remove the four bolts holding the door assembly to the furnace frame.
2. Remove the contact switch mounted below the door.
3. Install door on right hand side of the chamber frame, using the bolts in the holes provided. Install the contact switch in the mounting location provided at the right of old location.
4. Check alignment of the door insulation with the chamber.

Sideways adjustment can be made by loosening the door insulation supports and moving the insulation plug. Vertical adjustment can be made by placing or removing spacers on the door hinge.

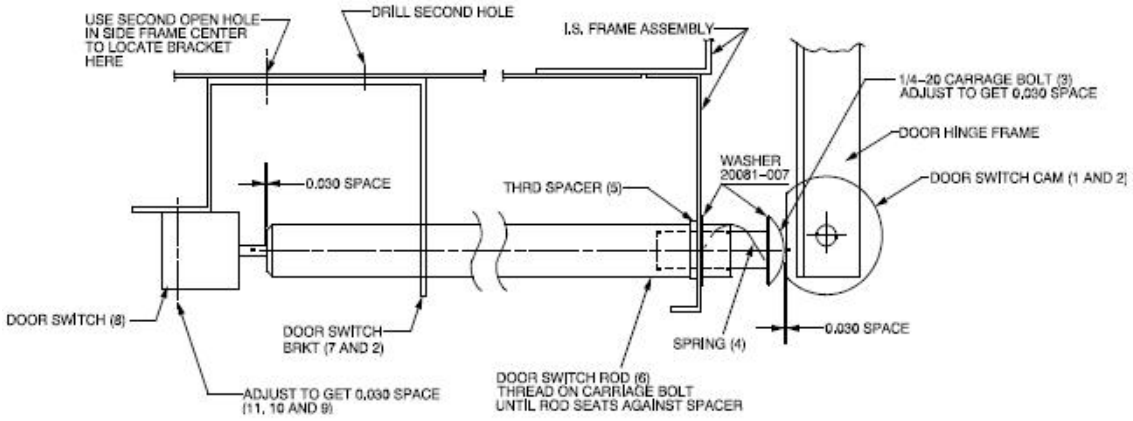

Figure 13. Door Hinge (Sheet 1/2)

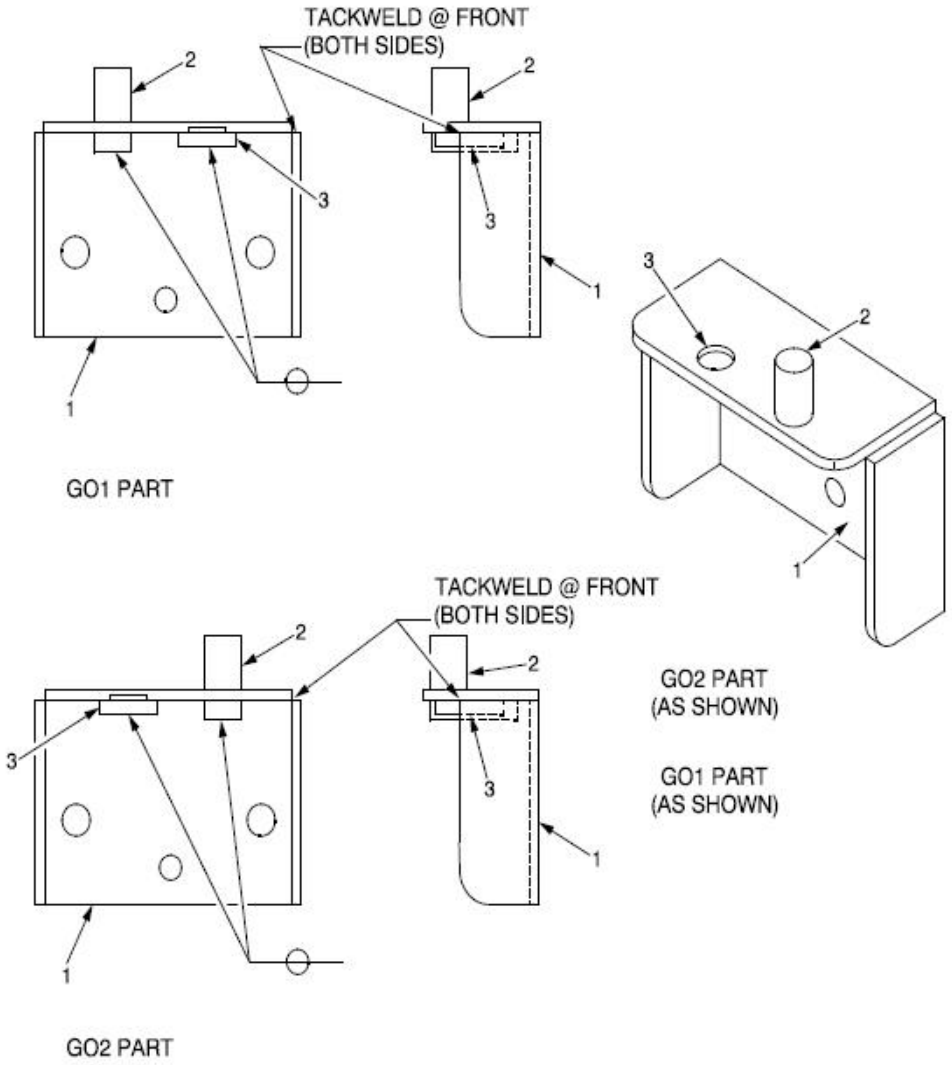

Figure 13. Door Hinge (Sheet 2/2)

Troubleshooting

Table 5. Controller Troubleshooting

Problem	Probable Causes	Solution
Controller reads P.Er.	Abnormal parameter value	Check controller parameter of settings and reset to proper values.
Controller reeds b.o	Input burnout	Check the sensor wiring, replace sensor if necessary
Controller reads ooo.	PV exceed effective range	Check the input type and range settings and correct them
Controller reads UUU.	PV is below effective range	Check the input type and range settings and correct them.
Controller reads Err	Probable hardware failure	Call Service for controller repair
The controller displays do not illuminate.	The furnace Is not connected to the power	Check furnace connection to power source
	Main switch is defective	Replace power switch or controller
	Fuse(s) Blown	Replace fuse(s) and verify power connections

Temperature varies or fluctuates.	Improper loading	Test the unit empty.If results are satisfactory, oven was improperly loaded. Redistribute the load
	Poor sensor connections	Check connections. Clean and tighten
	Contaminated sensor	Clear the area around the base
	Poor ventilation base	Clear the area around the base
	Inlet and / or exhaust vents are open	Close vents
	Inadequate tuning values.	Auto-tune the controller
	Insufficient stabilization time	Allow load ample time to reach equilibrium
	Intermittent failure of switch, controller, limit switch, or wiring	Verify wiring connection
Temperature Offset.	Controller degradation and/or sensor degradation	Offset or bias the controller and/ or replace the sensor

Replacement Parts

All quantities are one each unless noted.

Model-BF51842C, Box Furnace, 1200 °C

Description	Item	BF51842C-1	BF51842BC-1
Heater-Chamber, top or bottom	300880H01	2	2
Hearth Plate	300807H01	1	1
Shelf, Half-depth	7221-2067-001	2	2
Exhaust Port Cover	7221-2063-00A	1	1
Gas Inlet Assembly	300253G02 S	1	1
Thermocouple, Single	7299-1104-00B S	1	0
Thermocouple, Double	7299-1200-00M S	0	1
T/C Leadwire	33940-006	6 feet	12 feet
Wire Harness	38850G31	1	1
Main Circuit Breaker	302795H05	1	1
Control circuit breaker	21642H01	2	2
Heater fuse	32657-004	2	2
Contactor	300088H01	1	1
Solid State Relay	102460	1	1
Red Pilot Light	33002-01	1	1
Main Controller	303115H19	1	1
Over-temp Controller	303115H05	0	1
Door Insulation Assembly	7221-2048-00A	1	1
Door Switch	46113H02	1	1
Door Catch/Latch	38280H01	2	2

Door Trailing Arm	301667H01	1	1
Cab.Bracket, Trailing Arm rhd	301665G02	for optional right hand door swing	
Operational Manual	305432H01	1	1
Supplemental Manual	311831H01	1	1
Wiring Diagram	304258I01	1	1

Model BF51842PC,Box,Furnaces,1200°C

Description	**Item**	**BF51732C-1**	**BF51732PBC-1**
Heater-Chamber, top or bottom	300880H01	2	2
Hearth Plate	300807H01	1	1
Shelf, Half-depth	7221-2067-001	2	2
Exhaust Port Cover	7221-2063-00A	1	1
Gas Inlet Assembly	300253G02 S	1	1
Thermocouple, Single	7299-1104-00B S	1	0
Thermocouple, Double	7299-1200-00M S	0	1
T/C Leadwire	33940-006	6 feet	12 feet
Wire Harness	38850G31	1	1
Main Circuit Breaker	302795H05	1	1
Control circuit breaker	21642H01	2	2
Heater fuse	32657-004	2	2
Contactor	300088H01	1	1
Solid State Relay	102460	1	1
Red Pilot Light	33002-01	1	1
Main Controller	303115H19	1	1
Over-temp Controller	303115H05	0	1
Door Insulation Assem-bly	7221-2048-00A	1	1

Door Switch	46113H02	1	1
Door Catch/Latch	38280H01	2	2
Door Trailing Arm	301667H01	1	1
Cab.Bracket, Trailing Arm rhd	301665G02	for optional right hand door swing	
Operational Manual	305432H01	1	1
Supplemental Manual	311831H01	1	1
Wiring Diagram	304258I01	1	1

Model BF51842PC,Box,Furnace,1200°C

Description	**Item**	**BF51842PFMC-1**	**BF51842PFMBC-1**
Heater-Chamber, top or bottom	300880H01	2	2
Hearth Plate	300807H01	1	1
Shelf, Half-depth	7221-2067-001	2	2
Exhaust Port Cover	7221-2063-00A	1	1
Gas Inlet Assembly	300253G02 S	1	1
Thermocouple, Single	7299-1104-00B S	1	0
Thermocouple, Double	7299-1200-00M S	0	1
T/C Leadwire	33940-006	6 feet	12 feet
Wire Harness	38850G31	1	1
Main Circuit Breaker	302795H05	1	1
Control circuit breaker	21642H01	2	2
Heater fuse	32657-004	2	2
Contactor	300088H01	1	1
Solid State Relay	102460	1	1
Red Pilot Light	33002-01	1	1
Main Controller	303115H19	1	1
Over-temp Controller	303115H05	0	1

Door Insulation Assembly	7221-2048-00A	1	1
Door Switch	46113H02	1	1
Door Catch/Latch	38280H01	2	2
Door Trailing Arm	301667H01	1	1
Cab.Bracket, Trailing Arm rhd	301665G02	for optional right hand door swing	
Operational Manual	305432H01	1	1
Supplemental Manual	311831H01	1	1
Wiring Diagram	304258I01	1	1

On the following page is a wiring diagram for BF51842PC and PBC models.

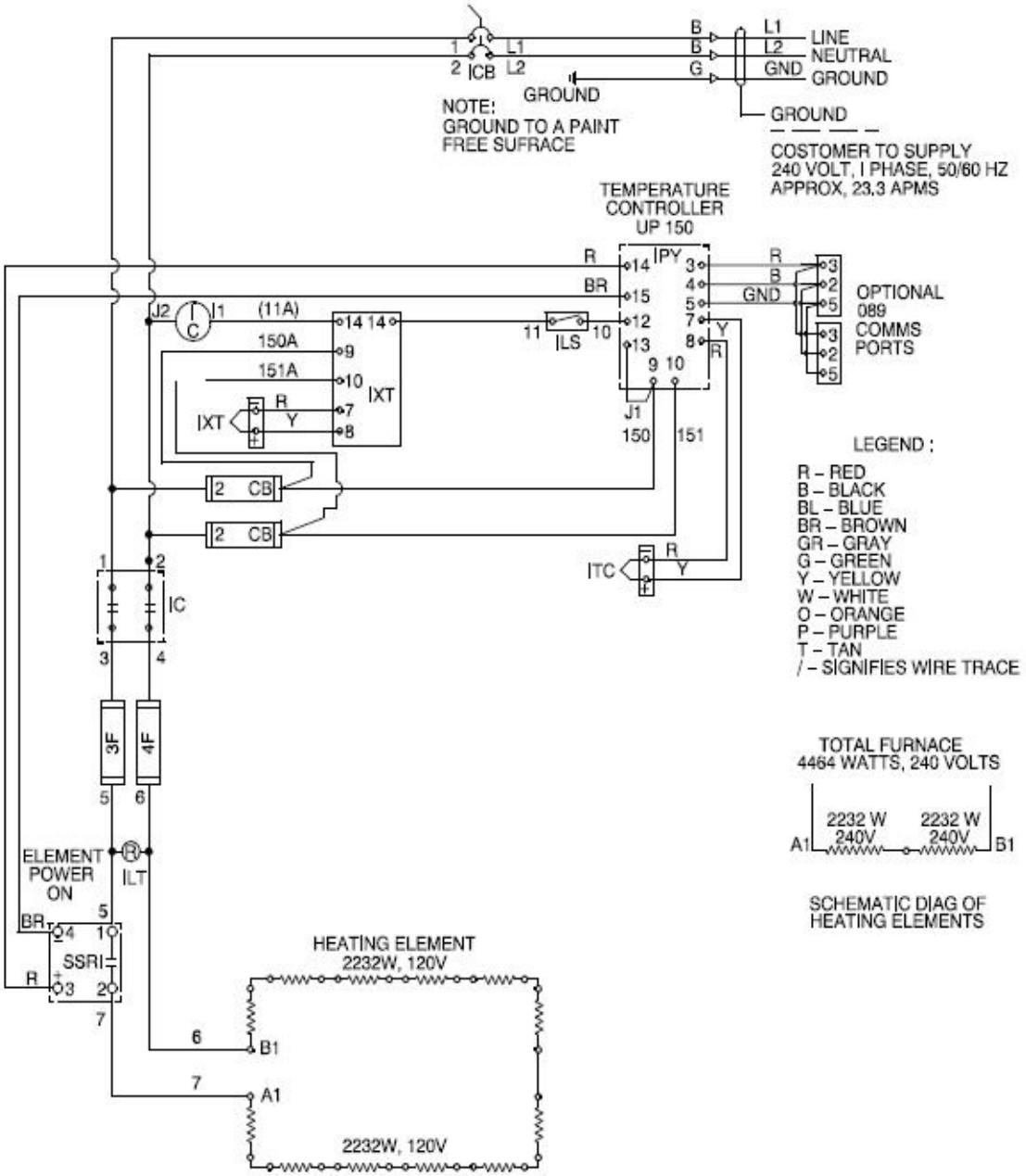

Figure 14. Wiring Diagram

WEEE Compliance

Great Britain

This product is required to comply with the European Union's Waste Electrical & Electronic Equipment (WEEE) Directive 2012/19/EU. It is marked with the following symbol. Thermo Scientific has contracted with one or more recycling disposed companies in each EU Member State, and this product should be disposed of or recycled through them. Further information on Thermo Scientific's compliance with these Directives, the recyclers in your country, and information on Thermo Scientific products which may assist the detection of substances subject to the RoHS Directive are available at www.thermo.com/WEEERoHS

Deutschland

Dieses Produkt muss die EU Waste Electrical & Electronic Equipment (WEEE) Richtlinie 2012/19/EU erfüllen. Das Produkt ist durch folgendes Symbol gekennzeichnet. Thermo Scientific hat Vereinbarungen getroffen mit Venvertungs-IEntsorgungsanlagen in allen EU-Mitgliederstaaten und dieses Produkt muss durch diese Firmen wieder entsorgt werden. Mehr Informationen iiber die Einhaltung dieser Anweisungen durch Thermo Scientific, die Verwerter und Hinweise die Ihnen niitzlich sein kijnnen, die Thermo Scientific Produkte zu identizfizieren, die unter diese RoHS Anweisung fillen, finden Sie unter www.thermo.com/WEEERoHS

Italia

Questo prodotto deve risponderealla direttiva dell'unione Europea 2012/19/EU in merito ai Rifiuti degli Apparecchi Elettrici ed Elearonici (WEEE). k marcato col seguente simbolo. Thermo Scientific ha stipulate contratti con una o diverse societi di ricicliggio/smdtimento in ognuno degli Stati Membri Europei. Questo prodotto verri smaltito o ricidato tramite queste medesirne. Ulteriori informazioni sulla conformi& di Thermo Scientific con queste Direttive, l'elenm dele dine di ricidaggio nel Vostro paese. e informazioni sui prodotti Thermo Scientific che possono essere utili dla rilevazione di sostanze soggette- alla Direttiva RoHS sono disponibili www.thermo.com/WEEERoHS

France

Ce pmduit doit &re conforme 1 la directive europtenne (2012/19/EU) des Dkchets d'Equipements Electriques et Electroniques (DEEE). I1 est merqui par le symbole suivant. Thermo Scientific s'est associi avec une ou plusieurs compagnies de recyclage dans chaque ttat membre de l'union europtenne et ce produit devrait &re collect6 ou recyclt par celles-ci. Davantage &informations sur la conformitt de Thermo Scientific 1 ces directives, les recycleurs dans votre pays et les informations sur les produits Thermo Scientific qui peuvent aider le dttection des substances sujettes i la directive RoHS sont dispoiblseusr www.thermo.com/WEEERoHS

Spare Parts and Accessories

This chapter is not applicable.

Device Log

Laboratory Box Furnaces		**Part number:**	
Serial number:		**Service number:**	
Location		**Operator's note:**	

Work carried out	**Notes**	**Date**	**Signed:**

Contact

Overview of Thermo Fisher International Sales Organization

Postal address in Germany
Thermo Electron LED GmbH
Robert-Bosch-Straße 1
D - 63505 Langenselbold

Enquiries from Germany:

Phone	
Sales	0800 1 536376
Service	0800 1 112110
Fax	
Sales/Service	0800 1 112114
Email	info.labequipment.de@thermofisher.com

Enquiries from Europe, Middle East and Africa:

Phone.	+ 49 (0) 6184 / 90-6940
Fax	+ 49 (0) 6184 / 90-6772
E-Mail	info.labequipment.de@thermofisher.com

Postal address USA:
Thermo Scientific
275 Aiken Road
Asheville, NC 28804
USA

Enquiries from North America:

Phone	+1 800-879 7767
Fax	+1 828-658 0363
E-Maili	info.l abequipment@thermofisher.com

Enquiries from Latin America:

Phone	+1 828-658 2711
Fax	+1 828-645 9466
E-Mail	info.labequipment@thermofisher.com

Enquiries from Asia Pacific:

Phone	+852-2711 3910
Fax	+852-2711 3858
E-Mail	info.labequipment@thermofisher.com