Model 6540 and 6550 Series

Thelco Oven
Operating and Maintenance Manual
3177885 Rev. J Dated 05APR07

Thermo
SCIENTIFIC

Table 1. Models Covered In This Manual

Current Model #	Previous Model #	Voltage
6540	70	120V
6541	70	230V
6545	70D	120V
6546	70D	230V
6550	70M	120V
6551	70M	230V
6555	70DM	120V
6556	70DM	230V
6542	130	120V
6543	130	230V
6547	130D	120V
6548	130D	230V
6552	130M	120V
6553	130M	230V
6557	130DM	120V
6558	130DM	230V
6544	160	230V
6549	160D	230V
6554	160M	230V
6559	160DM	230V

MANUAL NUMBER 3177885

REV	ECR/ECN	DATE	DESCRIPTION	By
J	--	4/07	Corrected P/N 3179481 line cord with 3176836, per D. Gillette	ccs
I	23443	5/06	Consolidated 230V manual (P/N 3179180) with 120V, no CE	ccs
H	--	2/06	Knob part number from 3174902 to 3174903, page 14	
G	--	1/06	Part number from 3176708 to 3176738, page 13	
F	--	11/05	Part number from 3174892 to 3174903, page 14	
E	--	7/05	new manual number (36100120 [34001783]), manufacture location	
D	--	8/03	Add temperature control range specification, page 3-4	
C	--	11/01	Add “plastics can melt”, page 8	
B	--	8/99	Updated for new kit #s, pages 12-14	
A	--	6/99	Initial release	

Important Read this instruction manual. Failure to read, understand and follow the instructions in this manual may result in damage to the unit, injury to operating personnel, and poor equipment performance. ▲

Caution All internal adjustments and maintenance must be performed by qualified service personnel. ▲

Note The 230V models in this manual were designed specifically for the European market and are supplied with a European-style power cord. For domestic use, a U.S.-style cord (P/N 3176836) must be ordered separately. Models 6544, 6549, 6554, 6559 are only available in 230V and are supplied from the factory with both cord styles. ▲

Material in this manual is for information purposes only. The contents and the product it describes are subject to change without notice. Thermo Fisher Scientific makes no representations or warranties with respect to this manual. In no event shall Thermo be held liable for any damages, direct or incidental, arising out of or related to the use of this manual.

©1999 Thermo Fisher Scientific. All rights reserved.

Important operating and/or maintenance instructions. Read the accompanying text carefully.

Potential electrical hazards. Only qualified persons should perform procedures associated with this symbol.

Equipment being maintained or serviced must be turned off and locked off to prevent possible injury.

Hot surface(s) present which may cause burns to unprotected skin, or to materials which may be damaged by elevated temperatures.

Marking of electrical and electronic equipment, which applies to electrical and electronic equipment falling under the Directive 2002/96/EC (WEEE) and the equipment that has been put on the market after 13 August 2005.

This product is required to comply with the European Union's Waste Electrical & Electronic Equipment (WEEE) Directive 2002/96/EC. It is marked with the WEEE symbol. Thermo Fisher Scientific has contracted with one or more recycling/disposal companies in each EU Member State European Country, and this product should be disposed of or recycled through them. Further information on Thermo's compliance with this directive, the recyclers in your country and information on Thermo products will be available at www.thermofisher.com.

- ✔ Always use the proper protective equipment (clothing, gloves, goggles, etc.)
- ✔ Always dissipate extreme cold or heat and wear protective clothing.
- ✔ Always follow good hygiene practices.
- ✔ Each individual is responsible for his or her own safety.

Do You Need Information or Assistance on Thermo Fisher Scientific Products?

If you do, please contact us 8:00 a.m. to 6:00 p.m. (Eastern Time) at:

1-740-373-4763	Direct
1-888-213-1790	Toll Free, U.S. and Canada
1-740-373-4189	FAX
http://www.thermo.com/forma	Internet Worldwide Web Home Page
services.controlenv@thermo.com	Service E-Mail Address

Our **Sales Support** staff can provide information on pricing and give you quotations. We can take your order and provide delivery information on major equipment items or make arrangements to have your local sales representative contact you. Our products are listed on the Internet and we can be contacted through our Internet home page.

Our **Service Support** staff can supply technical information about proper setup, operation or troubleshooting of your equipment. We can fill your needs for spare or replacement parts or provide you with on-site service. We can also provide you with a quotation on our Extended Warranty for your Thermo products.

Whatever Thermo products you need or use, we will be happy to discuss your applications. If you are experiencing technical problems, working together, we will help you locate the problem and, chances are, correct it yourself...over the telephone without a service call.

When more extensive service is necessary, we will assist you with direct factory trained technicians or a qualified service organization for on-the-spot repair. If your service need is covered by the warranty, we will arrange for the unit to be repaired at our expense and to your satisfaction.

Regardless of your needs, our professional telephone technicians are available to assist you Monday through Friday from 8:00 a.m. to 6:00 p.m. Eastern Time. Please contact us by telephone or fax. If you wish to write, our mailing address is:

Thermo Fisher Scientific Inc
Controlled Environment Equipment
401 Millcreek Road, Box 649
Marietta, OH 45750

International customers, please contact your local Thermo distributor.

Table of Contents

Section 1 Introduction 1-1

Section 2 Unpacking and Damage 2-1

Section 3 General Information 3-1

Section 4 Specifications 4-1

Section 5 Installation 5-1

Location 5-1
Electrical Connections 5-1

Section 6 Explanation of Controls 6-1

Section 7 Operation 7-1

Loading 7-3
Safety 7-4
Cleaning 7-5
Periodic Safety Check 7-6

Section 8 Maintenance and Service 8-1
Temperature Variance or Fluctuation 8-1
Temperature Offset 8-2
Calibration (Digital Models Only) 8-2
Heat Loss 8-3
Heater Resistance Check 8-3

Section 9 Parts Replacement 9-1
Heater Replacement 9-1
Heater Wire Replacement 9-1
Probe Replacement 9-2
Motor Replacement (Mechanical Models) 9-2
Control Replacement (Analog Models) 9-2
Control Replacement (Digital Models) 9-3
Door and Latch Repair 9-3
Door Latch Grabber (on body of oven) 9-4

Section 10 Electrical Schematics 10-1

Section 11 Warranty 11-1

Section 1 Introduction

Your satisfaction and safety are important to Thermo and a complete understanding of this unit is necessary to attain these objectives.

As the ultimate user of this apparatus, you have the responsibility to understand the proper function and operational characteristics of your oven. This instruction manual should be thoroughly read and all operators given adequate training before attempting to place this unit in service. Awareness of the stated cautions and warnings, and compliance with recommended operating parameters — together with maintenance requirements — are important for safe and satisfactory operation. The unit should be used for its intended application; alterations or modifications will void the warranty.

Warning As a routine laboratory precaution, always wear safety glasses when working with this apparatus. ▲

Warning This product is not intended, nor can it be used, as a sterile or patient connected device. In addition, this apparatus is not designed for use in Class I, II, or III locations as defined by the National Electrical Code. ▲

Warning When unpacking this unit, use a mechanical lifting device or enough people to easily lift the unit and place it in it's proper location. ▲

Caution The benchtop, or other mounting surface, must be rigidly constructed and capable of comfortably supporting the unit weight. Do not mount this equipment on a flammable surface. ▲

Section 2 Unpacking and Damage

Save all packing material if apparatus is received damaged. This product was carefully packed and thoroughly inspected before leaving our factory.

Responsibility for safe delivery was assumed by the carrier upon acceptance of the shipment; therefore, claims for loss or damage sustained in transit must be made upon the carrier by the recipient as follows:

1. Visible Loss or Damage: Note any external evidence of loss or damage on the freight bill or express receipt, and have it signed by the carrier's agent. Failure to adequately describe such external evidence of loss or damage may result in the carrier's refusing to honor your damage claim. The form required to file such claim will be supplied by the carrier.

2. Concealed Loss or Damage: Concealed loss or damage means loss or damage which does not become apparent until the merchandise has been unpacked and inspected. Should either occur, make a written request for inspection by carrier's agent within 15 days of the delivery date; then file a claim with the carrier since the damage is the carrier's responsibility.

If you follow the above instructions carefully, we will guarantee our full support of your claim to be compensated for loss from concealed damage.

DO NOT — for any reason — return this unit without first obtaining authorization. In any correspondence to Thermo, please supply the nameplate data, including catalog number and serial number.

Section 3 General Information

This instruction manual encompasses the following models and their specific electrical characteristics.

- Models 6540/6541, 6545/6546, 6542/6543, 6547/6548, 6544, and 6549 employ gravity convection as a method of heat transfer. Gravity convection is defined as the natural tendency for heated air to rise due to it's change in density and mass.

  Air is drawn into the chamber through openings in the bottom of the oven then heated as it passes over the electric heating coils and up through the diffuser panel located on the bottom of the inner chamber. A limited amount of the heated air is exhausted out of the chamber through the openings in the vent cap located on the top of the oven and the remaining air recirculates within the chamber.

  Gravity convection ovens are ideal where forced air circulation cannot be tolerated and for situations demanding gentle curing or long term sample storage under closely controlled conditions. Gravity convection ovens are ideal for drying powders, soil samples, paper goods, semiconductors and cosmetics.

- Models 6540/6541, 6542/6543, and 6544 use an analog solid state temperature control with analog solid state safety thermostat.

- Models 6545/6546, 6547/6548 and 6549 use a microprocessor control with digital set point, digital display and digital safety thermostat.

- Models 6550/6551, 6552/6553, 6554, 6555/6556, 6557/6558 and 6559 ovens use mechanical convection as a method of heat transfer. Mechanical convection can be defined as a positive and planned directional air flow or forced air circulation within the chamber. Air is drawn into the chamber through a vent tube located in the bottom of the oven and is heated as it passes over the electric heating coils. The air is blown through the duct network and forced into the chambers through calculated, carefully designed openings in the side diffuser walls.

  A limited amount of the heated air is exhausted out the top of the chamber through the vent shutter cap and the remaining air recirculates within the chamber.

Mechanical convection ovens provide the most efficient means of heat transfer as well as the most reproducible test conditions for repeat operations. Mechanical convection allows for rapid heat up time for high density loads, shortened recovery periods after door openings and improved uniformity for extremely heat sensitive materials.

- Models 6550/6551, 6552/6553 and 6554 provide mechanical convection of heat controlled by an analog solid state control with analog solid state safety thermostat.

- Models 6555/6556, 6557/6558 and 6559 provide mechanical convection of heat controlled by a microprocessor with digital set point, digital display and digital safety thermostat.

- Environmental Conditions -

  This instrument is designed to operate safely under the following conditions:

  - Indoor Use Only
  - Temperature: 5° to 40° C
  - Maximum Relative Humidity: 80% for temperatures to 22°C
  - Maximum Altitude 2000 meters

  Maximum performance is assured across the following temperature range:

  - 15°C to 45°C

Specifications	Gravity Convection					
	Model 6540/6541	**Model 6542/6543**	**Model 6544**	**Model 6545/6546**	**Model 6547/6548**	**Model 6549**
Temperature Control	Electronic			Microprocessor		
Temperature Display	0°C to 250° Thermometer			3 Digit LED		
Temperature Control Range	65°C to 250°					
Temperature @ 100° C	±4.0			±3.5		
Uniformity @ 200° C	±4.5			±4.5		
Sensitivity	±0.3° C			±0.1°C		
Minutes to reach Max. Temperature 250°	60					
***Recovery Time @ 100° C**	8		10			12
(minutes) @ 200° C	5		10			12
Max. Air Changes/Hr	30	23	15	30	23	15
Chamber Volume cu. ft.	2.5	4.5	5.5	2.5	4.5	5.5
liters	71.5	129	157.5	71.5	129	157.5
Net Weight lbs.	100	130	145	100	130	145
kg	45.3	59	65.8	45.3	59	65.8
Dimensions (D x W x H)						
Chamber inches	15-3/4x18-1/2x15	15-3/4x18-1/2x27	15-3/4x18-1/2x33	15-3/4x18-1/2x15	15-3/4x18-1/2x27	15-3/4x18-1/2x33
mm	400x470x381	400x470x686	400x470x838	400x470x381	400x470x686	400x470x838
****Overall inches**	21-1/4x24x28	21-1/4x24x40	21-1/4x24x46	21-1/4x24x28	21-1/4x24x40	21-1/4x24x46
mm	540x610x711	540x610x1016	540x610x1168	540x610x711	540x610x1016	540x610x1168
Electrical 50/60 Hz 115V	1200W 10.4A	1700W 14.8A	N/A N/A	1200W 10.4A	1700W 14.8A	N/A N/A
230V	1200W 5.2A	1700W 7.4A	2000W 8.7A	1200W 5.2A	1700W 7.4A	2000W 8.7A
Shipping Dimensions in.	25x26x31-1/4	25x26x43-1/4	25x26x49-1/4	25x26x31-1/4	25x26x43-1/4	25x26x49-1/4
Shipping Weight lbs.	125	155	170	125	155	170
Max Number of Shelves	6	12	15	6	12	15
****Shelves Supplied**	2					
Shelf Dimensions in.	15.5 x 18					
mm	390 x 455					
Catalog Number 115V	3166782	3166784	- -	3166787	3166789	- -
230V	3166783	3166785	3166786	3166788	3166790	3166791

"* Door Open for 30 seconds

** Overall height includes vent cap and adjustable feet

*** Spacing between shelves is 1-7/8" (48mm)

Specifications	**Mechanical Convection**					
	Model 6550/6551	**Model 6552/6553**	**Model 6554**	**Model 6555/6556**	**Model 6557/6558**	**Model 6559**
Temperature Control	Electronic			Microprocessor		
Temperature Display	0°C to 250° Thermometer			3 Digit LED		
Temperature Control Range	40°C to 250°					
Temperature @ 100° C	±3.0			±2.0		
Uniformity @ 200° C	±3.5			±3.0		
Sensitivity	±0.3°C			±0.1°C		
Minutes to reach Max. Temperature 250°	70					
***Recovery Time @ 100° C**	5		7	10		12
(minutes) @ 200° C	5		7	10		12
Max. Air Changes/Hr	52	34	19	52	34	10
Chamber Volume cu. ft.	2.5	4.5	5.5	2.5	4.5	5.5
liters	71.5	129	157.5	71.5	129	157.5
Net Weight lbs.	110	140	155	110	140	155
kg	50	63.5	70.3	50	63.5	70.3
Dimensions (D x W x H)						
Chamber inches	15-3/4x18-1/2x15	15-3/4x18-1/2x27	15-3/4x18-1/2x33	15-3/4x18-1/2x15	15-3/4x18-1/2x27	15-3/4x18-1/2x33
mm	400x470x381	400x470x686	400x470x838	400x470x381	400x470x686	400x470x838
****Overall inches**	21-1/4x24x28	21-1/4x24x40	21-1/4x24x46	21-1/4x24x28	21-1/4x24x40	21-1/4x24x46
mm	540x610x711	540x610x1016	540x610x1168	540x610x711	540x610x1016	540x610x1168
Electrical 50/60 Hz 115V	1300W 11.3A	1800W 15.6A	N/A N/A	1300W 11.3A	1800W 15.6A	N/A N/A
230V	1300W 5.6A	1800W 7.8A	2100W 9.1A	1300W 5.6A	1800W 7.8A	2100W 9.1A
Shipping Dimensions in.	25x26x31-1/4	25x26x43-1/4	25x26x49-1/4	25x26x31-1/4	25x26x43-1/4	25x26x49-1/4
Shipping Weight lbs.	135	165	180	135	165	180
Max Number of Shelves	6	12	15	6	12	15
***Shelves Supplied**	2					
Shelf Dimensions in.	15.5 x 18					
mm	390 x 455					
Catalog Number 115V	3166792	3166794	- -	3166797	3166799	- -
230V	3166793	3166795	3166796	3166798	3166800	3166801

"* Door Open for 30 seconds

** Overall height includes vent cap and adjustable feet

*** Spacing between shelves is 1-7/8" (48mm)

Section 5 Installation

Caution Installation should be completed by qualified instrument personnel only. ▲

Location

The most uniform operating conditions will be obtained by placing the oven in an area remote from drafts, ventilating outlets, radiators, and other rapidly changing ambient conditions. To assure proper ventilation, allow a minimum of 3 inches of clearance between the rear, top and sides of the oven and adjacent walls. If two or more ovens are to be placed side by side, allow 6 inches between them. The four legs on the bottom of the oven can be turned to raise or lower the corners of the oven so that it sits level on the table.

Warning For personal safety, this apparatus must be properly grounded. ▲

Electrical Connections

Most units detailed in this manual are equipped with three-pronged (grounded) plug power cords. These mate with standard three-prong receptacles to minimize the possibility of electric shock. The user should have the wall receptacle and circuit checked by a qualified electrician to make sure the receptacle is properly grounded.

Where a standard two-prong wall receptacle is encountered, it is the personal responsibility and obligation of the user to have it replaced with a properly grounded three-prong wall receptacle.

Warning Do not, under any circumstances, cut or remove the third (ground) prong from the power cord. Do not use a two-prong adapter. ▲

Determine the total amount of current being used by other apparatus connected to the same circuit as this unit. It is critical that the added current demand (see nameplate) of this and other equipment used on the same circuit does not exceed the rating of the fuse or circuit breaker.

Caution Be sure that the power supply is of the same voltage as specified on the nameplate. ▲

Electrical Connections (continued)

Caution Be sure the wall receptacle is readily identifiable and easily reached to disconnect the unit from the power source. ▲

Model 6557 115V units (Cat. No. 3166789) are equipped with non-standard plugs (one horizontal and one vertical blade) and require installation of a special matching receptacle. To be in compliance with the National Electrical Code, non-standard plugs and receptacles are required to accommodate higher current draw. Model 6557 115V units are rated at 15.6 amps.

Section 6 Explanation of Controls

Models 6540/6541, 6550/6551, 6542/6543, 6552/6553, 6544, and 6554

On/Off Switch - The on/off switch controls the flow of all electric power to the oven. The blower motor in the mechanically convected models will only be in operation with the power switch ON, and the timer not at setting "0".

Temperature Control Knobs - Two control knobs, Temperature Control and High Temperature Limit, set the operating temperature and safety set points respectively. The numerical graduations do not refer to any specific temperature, but are simply for reference.

Temperature Control Pilot Lamps - These lamps indicate the status of the controls. When the lamp above the Temperature Control is illuminated, electric current is being applied to the heater. It is normal for this lamp to cycle on and off during the operation of the oven. The lamp above the High Temperature Limit is illuminated only when first set. If this lamp is ON, it indicates that oven is controlling on the High Temperature Limit thermostat which has taken over control from the Temperature Control thermostat.

When the High Temperature Limit lamp comes on, it is due to either a Temperature Control thermostat failure, or the High Temperature Limit thermostat being set too close in value to the temperature control. In this case, a slight turn clockwise of the High Temperature Knob should increase the span between them.

Timer - The timer controls how long the oven will stay on if a predetermined time between one to twelve hours is desired. With the Timer set to the HOLD position, the oven will run continuously. If the Timer knob is first turned past two hours, then set to some value, the oven will turn off after that value has timed out.

Glass Thermometer - Used to indicate oven temperature and determine proper thermostat settings.

Light Switch - Turns interior lamp on and off.

Models 6545/6546, 6555/6556, 6547/6548, 6557/6558, 6549, and 6559

On/Off Switch - The on-off switch controls the flow of all electric power to the oven. The blower motor in the mechanically convected models will always be in operation with the power switch "ON".

Digital Displays - Three digital displays show actual temperature, set point temperature and hours.

Arrows - The arrow buttons allow you to increase (^) or decrease (v) the displayed temperature or time set point values.

Temp - The Temp button will allow you to select a set point value for desired temperature.

High Limit - The High Limit button allows you to select a set point value for the desired high temperature limit.

Set - The Set button allows you to enter the selected value using the arrow buttons while in Temp or High Limit mode.

Mute - The Mute button silences the audible alarm if activated.

Timer - The Timer Button puts the oven into either Continuous or Timed mode, as indicated by the Hours digital display. When in Continuous mode, the display shows -- (dashes); the Continuous lamp is illuminated, and the oven runs constantly. When in Timed mode, the display shows a numeral.

Start/Stop Button - The Start/Stop button is used to start the Timed operation or to interrupt the Timed cycle. When the Timed lamp is illuminated, the oven will remain at the set point temperature for the time displayed. When the lamp is not illuminated, the oven is not heating and the length of running time can be selected in hour increments using the arrow buttons.

Light On/Off - The Light ON/OFF switch operates the interior chamber lamp.

Section 7 Operation

Warning This equipment has reachable hot surfaces. The operator should take any precaution to avoid contact with these parts. ▲

Fully open the exhaust vent shutter cap on the top of the oven. Keep it open at all times. However, if running the oven at the maximum rated temperature, it may be necessary to turn the cap to a more closed position to retain heat.

Insert shelf supports into the holes punched in the side walls of the inner chamber. Insert the shelves into the shelf supports and try to keep an equal distance between shelves whenever possible. Try to position the shelves so they can be withdrawn more than halfway without falling. Never cover the shelves with foil or reduce their open surface area by more than 75%, this will greatly reduce convection, causing uniformity and control to suffer.

Models 6545/6546, 6555/6556, 6547/6548, 6557/6558, 6549, and 6559

1. Press the ON/OFF switch for power to the ON position.

2. Set desired temperature by pressing TEMP button once and use arrow keys to raise or lower to desired value. When desired value is displayed in the SET POINT window, press the SET button.

3. Set desired high limit value by pressing HIGH LIMIT button and use arrow keys to raise or lower desired values. This value **MUST BE** at least 5° higher than the TEMP set point value previously set. If not, the display will blink "Hi" until an appropriate value is selected. When desired high temp limit value is shown in the SET POINT window, press the SET button.

4. For the oven to run continuously, the Continuous lamp should be on. If it is not, dpress the Timer button to light the Continuous lamp. To run the oven for a set number of hours, dpress the Timer button again; a "0" will be displayed. Use the arrow buttons to enter the desired number of running hours in one hour increments. Press the Start/Stop button once to start timed operation.

5. If the actual temperature exceeds the entered high limit value, the HIGH LIMIT thermostat circuit will take over and the alarm will sound. Press the MUTE button to silence the alarm and check Maintenance and Servicing.

6. If the set point of the oven is lowered while the oven is still hot, and the new HIGH LIMIT value selected is less than the previous SET POINT, the high limit alarm will sound until the oven cools to below the new HIGH LIMIT value. This is normal. Press MUTE to silence the alarm.

Models 6540/6541, 6550/6551, 6542/6543, 6552/6553, 6544, and 6554

A mercury-in-glass thermometer is provided for the models listed above. Insert thermometer through the hole in the vent shutter cap so that the three metal fingers punched in the cap converge toward the center of the cap and the glass ring on the thermometer rests on top of the cap. The metal fingers may have to be bent slightly to grip the thermometer.

1. Press the ON/OFF power switch to the "ON" position.
2. Turn the Timer knob to the “Hold” position.
3. Rotate the High Temperature Limit knob fully clockwise.
4. Rotate the Temperature Control knob to some median position.
5. Allow sufficient time for the chamber to heat and observe the temperature on the thermometer in the vent cap. The lamp above the Temperature Control Knob should turn on and off at fairly regular intervals to indicate that control has stabilized at a particular setpoint.
6. If thermometer indicates that chamber temperature is below desired setpoint, and the lamp above Temperature Control has been turning on and off, rotate Temperature Control slightly clockwise. Turn Temperature Control slightly counterclockwise if the thermometer indicates chamber temperature is above the desired setpoint.
7. When thermometer indicates chamber is at desired temperature and the lamp above Temperature Control is cycling on and off at fairly uniform intervals, begin to turn High Temperature Limit Knob slowly counterclockwise. The moment the lamp above High Temperature illuminates, the lamp above Temperature Control turns off. Rotate High Temperature Limit clockwise just until the lamp above High Temperature Limit is off and the lamp above Temperature Control turns on. The High Temperature Limit has now been properly set.
8. Timed Control - The Timer knob, set in the Hold position, allows the oven to run continuously. To run the oven for any predetermined time between one to twelve hours, first set the oven temperature, using the Temperature Control and High Temperature Limit knobs as previously explained, with the Timer in Hold position. When the oven is holding the desired temperature, turn Timer knob past 2, then set to desired number of hours for the oven to run. When the timer runs out, the oven shuts off.
9. To turn off the oven, press power switch to OFF position. Controls may be left in position to resume at the same temperature later.

Loading

Although the gravity and mechanical convection ovens rely on different methods of air circulation, general loading procedures are applicable to both types and must be followed. It is important for uniformity and recovery that air circulation within the chamber is not restricted.

1. At least 1" (2.5 cm) should be left between objects placed on the shelves.

Note Within the mechanical convection cabinets, objects should not be placed on the shelves in such a manner to block the movement of heated air into the chamber from the sidewall diffuser panels. ▲

2. The bottom floor of the chamber must be kept free and clear of objects and never used as a shelf.

3. At no time should solid shelves be substituted for the shelves that are provided. Additional shelves and shelf supports are available from Thermo.

Safety

1. DO NOT place any explosive, combustible or flammable materials in this chamber.

2. DO NOT place sealed containers in the chamber. Sealed containers, filled with materials, do not provide room for expansion or evaporation and can develop dangerous vapor pressure as the temperature increases.

3. Avoid placing plastic materials in the oven. Extreme temperatures may cause plastics to melt, posing a fire hazard. If plastics are placed in the oven, do not leave the oven unattended.

4. Avoid spillage of liquids or powders within the chamber. Clean all spills as soon as possible. Use caution if oven is still hot.

5. DO NOT evaporate noxious or poisonous fumes.

6. These ovens are not intended for food service or the preparation of meals.

Caution DO NOT store containers filled with acidic or caustic solutions within the chamber, as vapors from these materials will attack the chamber interior and electrical components, thus voiding the warranty. ▲

Warning Explosion, implosion or the release of toxic or flammable gases arising from material being heated is the sole responsibility of the user. ▲

Cleaning

Stainless steel will resist corrosion; however, it is not impervious to it. Proper maintenance of the stainless steel bath chamber will help assure many years of service.

Caution Avoid spilling harsh chemicals inside the chamber, as corrosion of the stainless steel may result. ▲

Important The user has the responsibility for carrying out appropriate decontamination if hazardous material is spilled on or inside chamber. ▲

The chamber should be cleaned regularly with mild soapy water and rinsed with distilled water. Should algae or other undesirable microorganisms form inside the chamber, add a little formaldehyde or quaternary ammonium germicide, available from Thermo (P/N 3166250).

Important If it is necessary to use the following chemicals, limit the time to a maximum of four hours. Clean surfaces immediately after use. ▲

-Aluminum Chloride
-Bichloride of Mercury
-Carbolic Acid
-Citric Acid (boiling)
-Ferrous Chloride
-LysolMercuric Chloride
-Potassium Permanganate
-Potassium Thiocyanate
-Sodium Hypochlorite
-Barium Chloride
-Calcium Chloride
-Chlorinated Lime
-Dakin's Solution
-Mercury Salts
-Phenol
-Stanous Chloride
-Tartaric Acid

Caution Do not use other cleaning or decontamination methods without first contacting the Technical Services department. ▲

Never use the following chemicals:

-Aqua Regia
-Iodine
-Sulfuric Acid
-Ferric Chloride
-Sodium Azide

Cleaning (continued)

Removing Discoloration: Should the stainless steel ever become discolored by iron rust, use the following procedure to remove all traces of the rust and restore the stainless steel.

Warning Observe the following safety precautions! Use heavy gloves or other adequate hand protection. Wear goggles or other adequate eye protection. Only work in areas with adequate ventilation. ▲

Prepare a solution of 20% nitric and 1.5% hydrochloric acid (if preferred, a 2% to 5% solution of warm oxalic acid may be used). Swab solution over surface, allowing it to remain until all rust is loosened. This will usually take 1 to 2 minutes.

As soon as rust is loosened, immediately flush with clean water until all acid is removed.

Periodic Safety Check

Test the operation of the Hi-Limit thermostat, as described previously in this section, every three months.

Section 8 Maintenance and Service

Warning Dangerous voltages exist within this unit. Service should be performed only by qualified personnel. Disconnect the unit from its electrical source. Remove the shelves and thermometer if supplied. Disconnecting any component from the circuit without prior removal of the power source may cause damage to other circuit components. ▲

Temperature Variance or Fluctuation

1. Make sure vent shutter cap is not closed. Open to the maximum position.
2. Test the unit when empty. If results are satisfactory, the chamber was improperly loaded. Redistribute the load.
3. Be sure to allow ample time for an empty chamber to stabilize at the desired temperature setting. It could take over one hour to stabilize, depending upon the difference between ambient and operating temperatures. The mass of the load can also affect stabilization time.
4. Make certain severe line voltage fluctuations are not occurring.
5. Make certain all wire connections are secure at their terminals.
6. Make certain that an intermittent failure of the switch, thermostat or wiring has not occurred. Isolate the cause. Repair or replace.

Temperature Offset (Digital Models Only)

A temperature offset may be required to match a stable oven's actual temperature display to a calibrated thermometer. This is normal and can be adjusted as follows:

1. Allow the oven to stabilize.
2. Press the TEMP button twice. The Actual display will read "OFF".
3. Press the arrow buttons to make the SET POINT display agree with the calibrated thermometer reading.
4. Press SET. The SET POINT display will show the desired set point. The ACTUAL display will agree with the thermometer. The oven will heat or cool as required to the desired set point.

Calibration (Digital Models Only)

Note A resistance decade box capable of 0.01 ohm resolution is required for this procedure. ▲

1. Turn oven power off and disconnect from power.
2. Open control panel by removing top screws securing it. Lift and pull out.
3. Disconnect temperature sensor from CPU board and replace with decade box set at 100.00 ohms.
4. Reconnect oven to power source.
5. Press SET button while turning oven on.
6. Press SET button again, and use the up arrow button to make the display read "12". Press the SET button again.
7. Be sure the decade box is set to 100.00 ohms, then press the down arrow button. The display should read "100". Press the SET button.
8. Set the decade box to 200.00 ohms, then press the down arrow button. The display should read "200". Press the SET button.
9. The oven is now calibrated. Turn oven power off and disconnect from power. Remove decade box and reconnect temperature sensor.
10. Close control panel and secure.

Heat Loss

Inspect door gasket to make certain it fits firmly against cabinet at all points. Replace gasket if torn or damaged.

Improper door closure - Inspect door latches which are spring loaded to see if they pull the door in tightly against the body of the oven. If the "finger" of the latch (in the door) has been sprung into the body of the latch, use a pen or similar object to pop it back out. Check the oven cabinet to see that it is level. Use a spirit level and turn the 4 adjustable feet on the bottom of the oven to make it level.

No Heat - If the chamber does not heat, first check the line voltage, circuit breakers and/or fuses of the line circuit. Check if all electrical connections are secure.

Heater Resistance Check

Warning Disconnect oven from its power source before proceeding. Refer to the appropriate wiring diagram at the end of the manual and locate the electrical leads for the heater. Use the values in the Heater Cold Resistance Table to find the appropriate value. Be sure to disconnect at least one heater lead from the terminal strip before taking the reading with the ohm meter. Again, it is imperative that the unit be completely disconnected from its electrical power source before any readings are taken. ▲

If the heater is open (infinite resistance), it should be replaced. If the heater reads less than five ohms, it is shorted and should be replaced. Check the resistance between each lead of heater and a bare metal point on the oven chassis. If there is less than infinite resistance (a million ohms or greater) between the heater and chassis, the heater is shorted to ground and should be replaced. Also, inspect all wires leading to the heater for signs of shorting or electrical contact to chassis of oven.

Section 9 Parts Replacement

Part replacement procedures follow.

Heater Replacement

1. Disconnect power.
2. Remove screws in front securing lower oven floor and lift floor out.
3. Disconnect heater terminals and heater mounting screws.
4. Replace with new heater. Reassemble in reverse order.

Heater Wire Replacement

1. Disconnect power.
2. Open door as wide as possible.
3. Open control panel by removing two top screws. Set panel aside, exposing controls.
4. Unplug the heater connection located on the board.
5. Remove 2 screws from stainless steel flange just above control panel.
6. The chamber floor is now free. Pull forward and lift out.
7. Disconnect heater leads.
8. Remove heater leads and connector from the opening in control panel.
9. Replace heater leads by reversing these steps.

Probe Replacement

1. Disconnect power.
2. Remove back panel screws.
3. Remove screws in front securing lower oven floor and lift floor out.
4. Pull probe straight out.
5. Open control panel by removing top screws securing it and disconnect probe terminals.
6. Replace with new probe, reinstall in reverse order.

Motor Replacement (Mechanical Models)

1. Disconnect power.
2. Remove screws in front securing lower oven floor and lift floor out.
3. Disconnect heater terminals and heater mounting screws. Remove heater.
4. Detach blower wheel from motor shaft.
5. Open control panel by removing top screws securing it and disconnect motor terminals.
6. Remove motor mounting bracket from underside of oven. Turn oven on its back or side to facilitate this removal.
7. Replace with new motor. Reassemble in reverse order.

Control Replacement (Analog Models)

1. Disconnect power.
2. Open control panel by removing top screws securing it and disconnect leads to control pcb.
3. Remove adjustment knob from potentiometer shaft.
4. Remove control PCB from standoffs.
5. Replace with new control PCB.
6. Reassemble in reverse order.

Control Replacement (Digital Models)

1. Disconnect power.
2. Open control panel by removing top screws securing it and disconnect electrical leads.
3. Remove control PCB from face of panel or power PCB from control base by removing mounting nuts.
4. Replace with new PCBs. Reassemble in reverse order.

Door and Latch Repair

1. Disconnect power.
2. Remove door by unscrewing top hinge plate. Be careful to hold door while removing hinge.
3. Lift door off lower hinge.
4. Replace door in reverse order.

1a. Replace door gasket by removing the screws securing inner door liner. Reassemble in reverse order.

2a. Replace door latches by removing inner door liner, door gasket and door insulation.

3a. Unscrew door latch clips and replace latches.

4a. Reassemble in reverse order.

1b. Replace door handle by removing inner door liner, door gasket and door insulation.

2b. Remove nuts which secure door handle and replace handle.

3b. Reassemble in reverse order.

Door Latch Grabber (on body of oven)

1. Disconnect power.
2. Remove screws securing door latch grabber and remove from front.

Note Retaining nuts will fall into oven body. ▲

3. Insert replacement latch assembly through open slot and fasten with screws and washer provided.

Replacement Parts List - Thelco Oven - All Models				
Model		**70 (All)**	**130 (All)**	**160 (All)**
Part Number	**Description**			
3167086	Door Assembly	X		
3167075	Door Assembly		X	
3167076	Door Assembly			X
3166214	Shelf Kit	X	X	X
3167014	Kit, Oven Packaging Small (120V)	X		
3167019	Kit, Oven Packaging Small (230V)	X		
3164530	Kit, Oven Packaging Med.		X	
3164531	Kit, Oven Packaging Large			X
3167249	Door Gasket Kit	X	X	X
3175318	Switch, DPST, Non-Lighted	X	X	X
3167186	Leveling Foot Kit	X	X	X
3175511	Heater - 1100 Watts	X		
3175512	Heater - 1600 Watts		X	
3175513	Heater - 1900 Watts			X
3176552	Cord and Plug Set	X		
3176562	Cord Set 14GA		X	
3176559	Line Cord 220V 3 Conductor	X	X	X
3177386	Vent Shutter Cap	X	X	X
3164520	Door Handle	X		
3164521	Door Handle		X	X
3167037	Latch Replacement Kit	X	X	X
3172450	Mains Fuse (230V)	X	X	X
3179482	Power Cord (230V)	X	X	X

Replacement Parts List - Thelco Oven - Digital Models							
Model		**70D**	**130D**	**160D**	**70DM**	**130DM**	**160DM**
Part Number	**Description**						
3166924	Power Supply Kit	X	X	X	X	X	X
3176704	Keyboard Digital Oven	X	X	X	X	X	X
3176705	PCB Assembly High Limit	X	X	X	X	X	X
3176706	PCB Assembly C.P.U.	X	X	X	X	X	X
3176738	RTD Sensor	X	X	X	X	X	X
3176758	Interface, High Limit	X	X	X	X	X	X
3167193	Fuse Kit 1/4A 250V (115V)	X	X	X	X	X	X
3175930	Fuse FST 6.3x32 63mA (230V)	X	X	X	X	X	X
3175897	Blower Wheel				X	X	X
3166987	Motor Assembly (115V)				X	X	
3167015	Motor Assembly (230V)				X	X	X
3176726	Wiring Harness	X	X	X	X	X	X
3176736	Interface Cable	X	X	X	X	X	X
3162397	Bottom Plate, Mechanical				X	X	X
3162398	Bottom Plate, Gravity	X	X	X			

Replacement Parts List - Thelco Oven - Analog Models							
Model		**70**	**130**	**160**	**70M**	**130M**	**160M**
Part Number	**Description**						
3167193	Fuse Kit 1/4A 250V	X	X	X	X	X	X
3175931	Fuse, FST 6.3x32 31mA	X	X	X	X	X	X
3175897	Blower Wheel				X	X	X
3166987	Motor Assembly 115V				X	X	
3167015	Motor Assembly 230V				X	X	X
3176028	Timer, 12 Hr. Mechanical	X	X	X	X	X	X
3174903	Knob, Analog Timer	X	X	X	X	X	X
3176728	Wiring Harness	X	X	X	X	X	X
3174903	Knob, Temperature	X	X	X	X	X	X
3162433	Light Assembly 115V	X	X		X	X	
3162434	Light Assembly 230V	X	X	X	X	X	X
3167189	Temperature Controller PCB Kit	X	X	X			
3167188	Hi-Limit Controller PCB Kit	X	X	X	2	2	2
3176739	RTD Assembly, 1000 0HM	X	X	X	X	X	

Accessory List - Thelco Oven							
Model		**70**	**130**	**160**	**70M**	**130M**	**160M**
Part Number	**Description**						
3175130	Bulb, 40W 120V	X	X		X	X	
3175131	Bulb, 50W 230V	X	X	X	X	X	X
3175996	Thermometer 0-250°C	X	X	X	X	X	X
3166245	RS-232 Interface Kit (Digital Models Only)	X	X	X	X	X	X

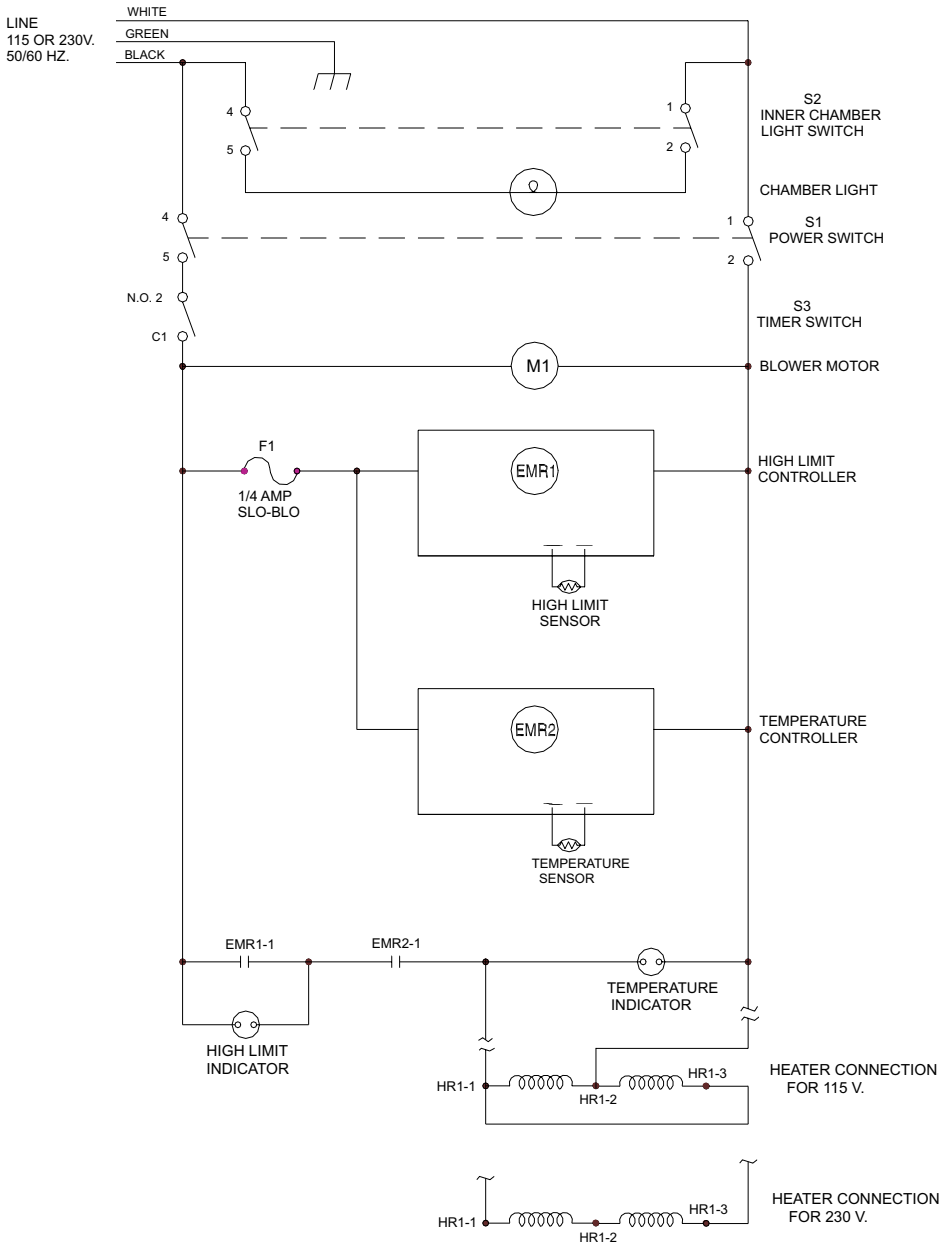

Jouan
170 Marcel Drive Winchester, VA 22602

DWG. TITLE
CONTROL CIRCUIT DIAGRAM
THELCO ANALOG OVENS
MECHANICAL AND GRAVITY

SIZE	SHEET	DWG. NO.	REV.
A	1 OF 1	391202	
	SCALE: NONE		

REVISIONS				
LTR	ECN	ENGR / DFTR	DATE	INIT
	27749	MR / MR	12-6-93	
	RELEASE NEW DRAWING			
A		D.G./ ADL	22MAR99	
	UPDATE FILE FORMAT AND P/N'S			

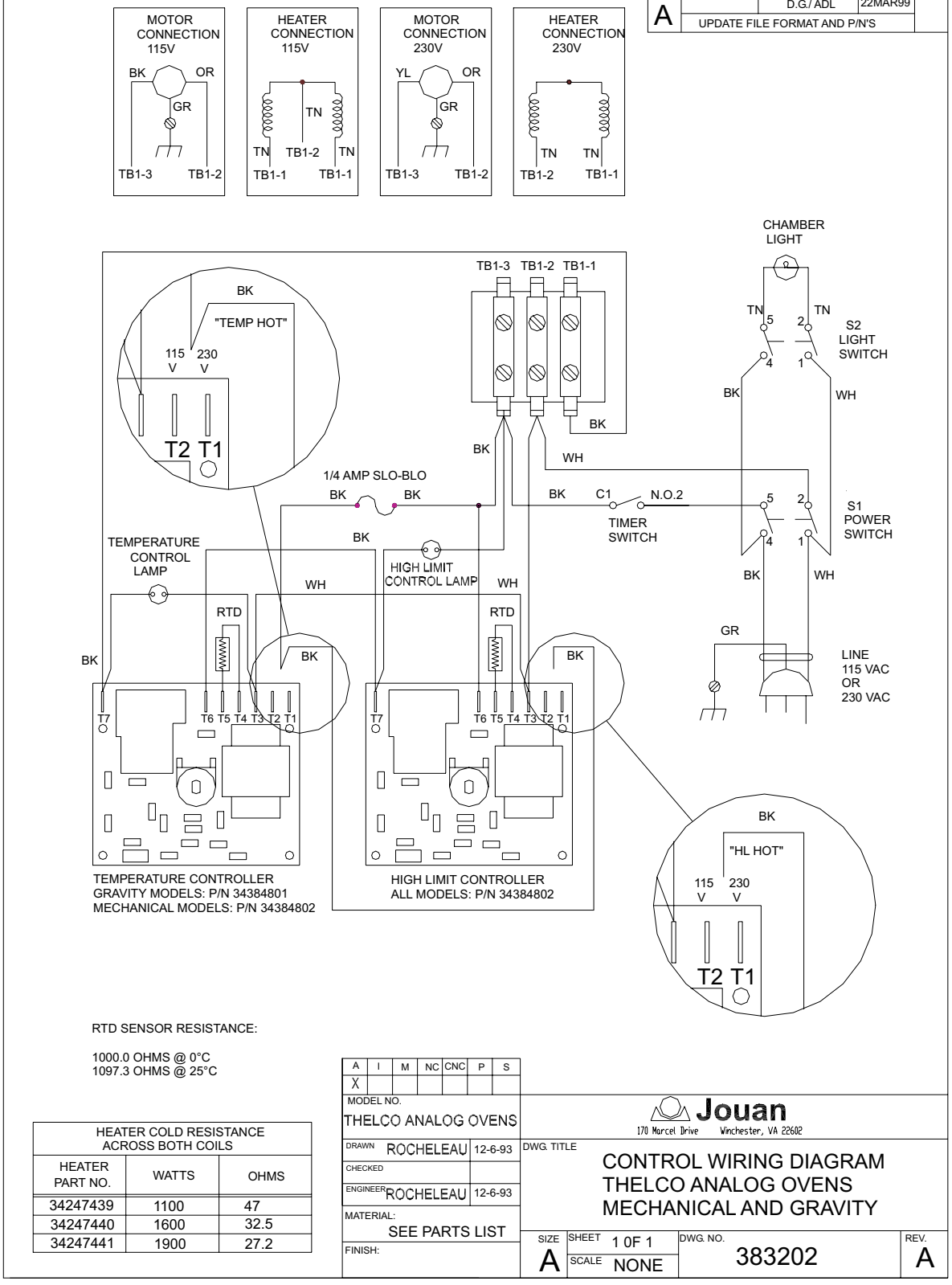

RTD SENSOR RESISTANCE:

1000.0 OHMS @ 0°C
1097.3 OHMS @ 25°C

HEATER COLD RESISTANCE ACROSS BOTH COILS		
HEATER PART NO.	WATTS	OHMS
34247439	1100	47
34247440	1600	32.5
34247441	1900	27.2

A	I	M	NC	CNC	P	S
X						

MODEL NO.
THELCO ANALOG OVENS

Jouan
170 Marcel Drive Winchester, VA 22602

DRAWN ROCHELEAU 12-6-93
CHECKED
ENGINEER ROCHELEAU 12-6-93
MATERIAL: SEE PARTS LIST
FINISH:

DWG. TITLE
CONTROL WIRING DIAGRAM
THELCO ANALOG OVENS
MECHANICAL AND GRAVITY

SIZE A | SHEET 1 0F 1 | SCALE NONE | DWG. NO. 383202 | REV. A

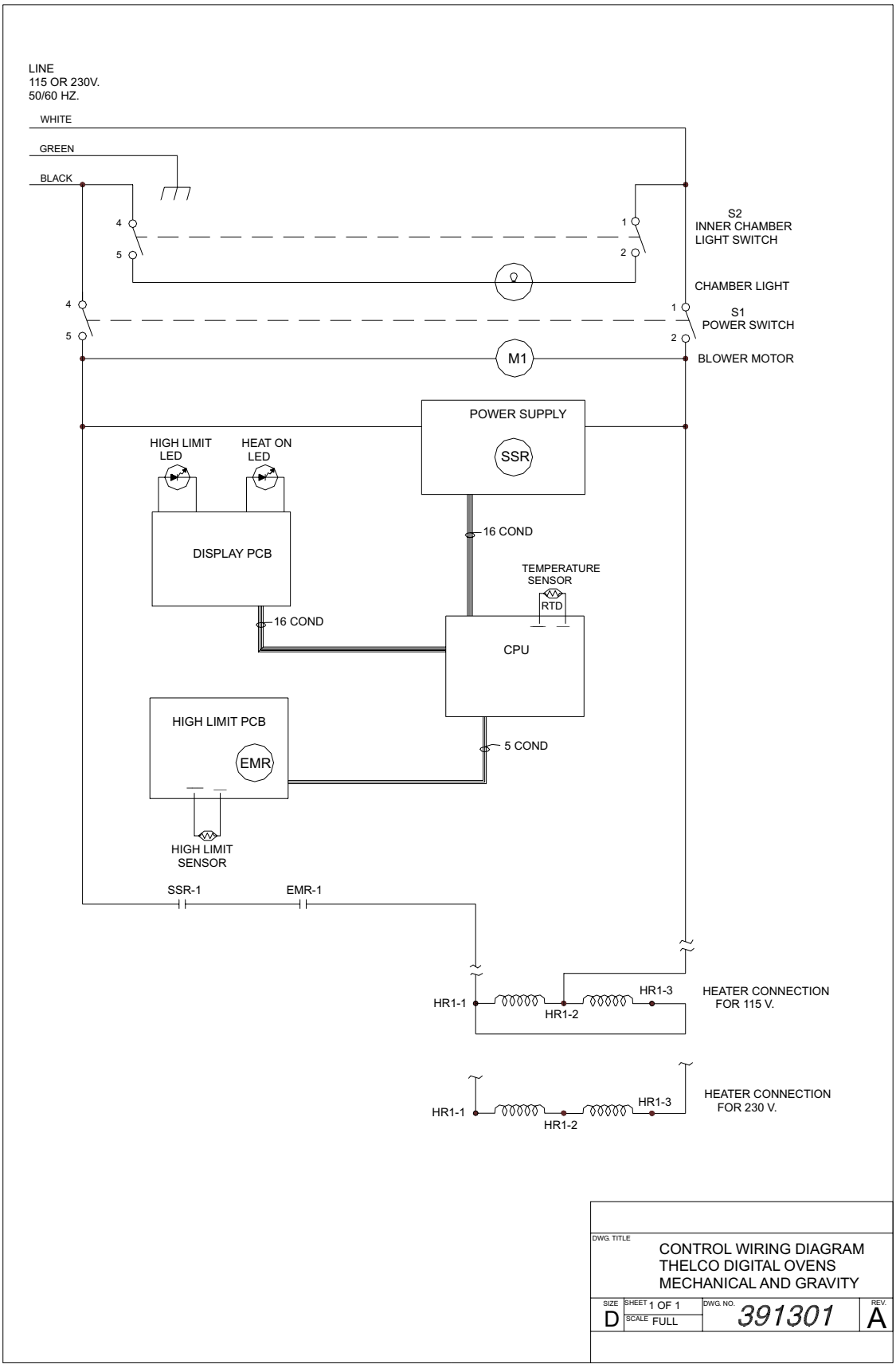
LINE
115 OR 230V.
50/60 HZ.
WHITE
GREEN
BLACK
4
5
1
2
S2
INNER CHAMBER
LIGHT SWITCH
CHAMBER LIGHT
4
5
1
2
S1
POWER SWITCH
M1
BLOWER MOTOR
POWER SUPPLY
SSR
HIGH LIMIT
LED
HEAT ON
LED
16 COND
DISPLAY PCB
TEMPERATURE
SENSOR
RTD
16 COND
CPU
HIGH LIMIT PCB
EMR
5 COND
HIGH LIMIT
SENSOR
SSR-1
EMR-1
HR1-1
HR1-2
HR1-3
HEATER CONNECTION
FOR 115 V.
HR1-1
HR1-2
HR1-3
HEATER CONNECTION
FOR 230 V.
DWG. TITLE
CONTROL WIRING DIAGRAM
THELCO DIGITAL OVENS
MECHANICAL AND GRAVITY
SIZE
D
SHEET
1 OF 1
SCALE
FULL
DWG. NO.
391301
REV.
A

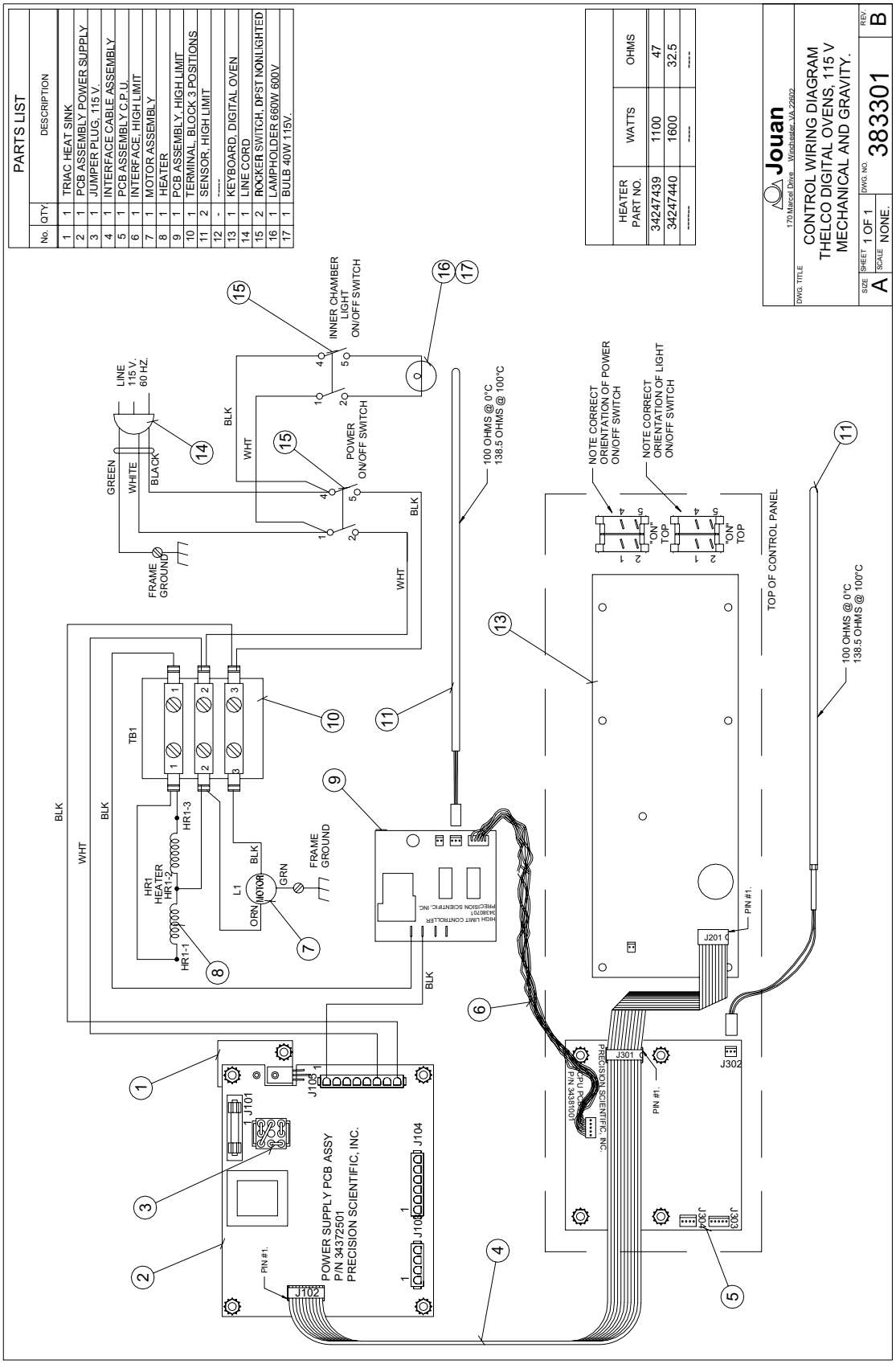
PARTS LIST
No. QTY DESCRIPTION
1 1 TRIAC HEAT SINK
2 1 PCB ASSEMBLY POWER SUPPLY
3 1 JUMPER PLUG, 115 V.
4 1 INTERFACE CABLE ASSEMBLY
5 1 PCB ASSEMBLY C.P.U.
6 1 INTERFACE, HIGH LIMIT
7 1 MOTOR ASSEMBLY
8 1 HEATER
9 1 PCB ASSEMBLY, HIGH LIMIT
10 1 TERMINAL, BLOCK 3 POSITIONS
11 2 SENSOR, HIGH LIMIT
12 - -----
13 1 KEYBOARD, DIGITAL OVEN
14 1 LINE CORD
15 2 ROCKER SWITCH, DPST NONLIGHTED
16 1 LAMPHOLDER 660W 600V
17 1 BULB 40W 115V.
HEATER PART NO. WATTS OHMS
34247439 1100 47
34247440 1600 32.5
------ ----- ----
Jouan
170 Marcel Drive Winchester, VA 22602
DWG. TITLE
CONTROL WIRING DIAGRAM
THELCO DIGITAL OVENS, 115 V
MECHANICAL AND GRAVITY.
SIZE A
SHEET 1 OF 1
SCALE NONE.
DWG. NO. 383301
REV. B
LINE 115 V. 60 HZ.
GREEN
WHITE
BLACK
FRAME GROUND
POWER ON/OFF SWITCH
INNER CHAMBER LIGHT ON/OFF SWITCH
BLK
WHT
100 OHMS @ 0°C
138.5 OHMS @ 100°C
NOTE CORRECT ORIENTATION OF POWER ON/OFF SWITCH
NOTE CORRECT ORIENTATION OF LIGHT ON/OFF SWITCH
"ON" TOP
TOP OF CONTROL PANEL
TB1
HR1 HEATER
HR1-1
HR1-2
HR1-3
L1
MOTOR
ORN
GRN
HIGH LIMIT CONTROLLER
PRECISION SCIENTIFIC INC.
POWER SUPPLY PCB ASSY
P/N 34372501
PRECISION SCIENTIFIC, INC.
J101
J102
J103
J104
J105
J106
J201
J301
J302
PIN #1.

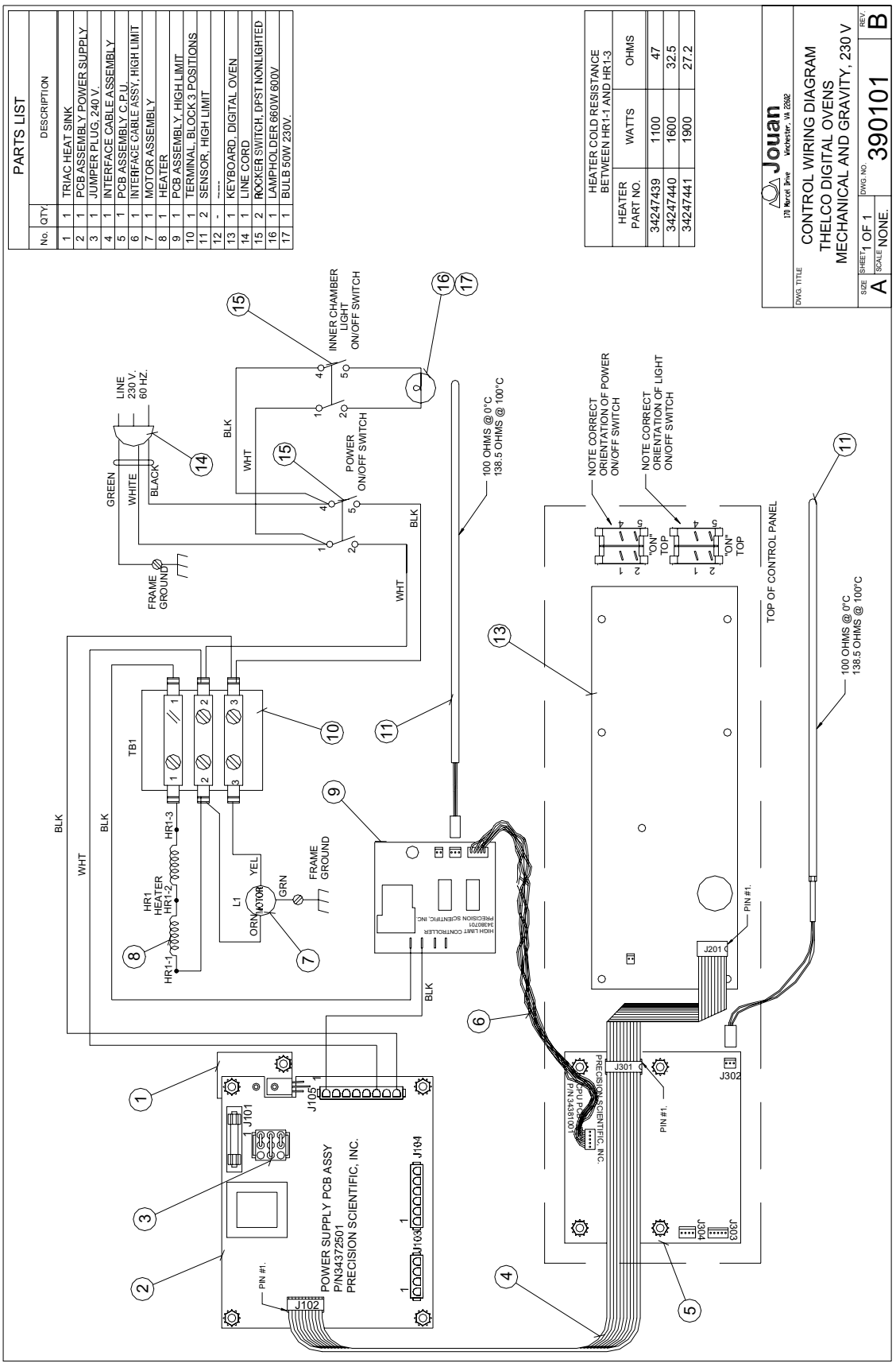
PARTS LIST
No. QTY. DESCRIPTION
1 1 TRIAC HEAT SINK
2 1 PCB ASSEMBLY POWER SUPPLY
3 1 JUMPER PLUG, 240 V.
4 1 INTERFACE CABLE ASSEMBLY
5 1 PCB ASSEMBLY C.P.U.
6 1 INTERFACE CABLE ASSY, HIGH LIMIT
7 1 MOTOR ASSEMBLY
8 1 HEATER
9 1 PCB ASSEMBLY, HIGH LIMIT
10 1 TERMINAL, BLOCK 3 POSITIONS
11 2 SENSOR, HIGH LIMIT
12 - ----
13 1 KEYBOARD, DIGITAL OVEN
14 1 LINE CORD
15 2 ROCKER SWITCH, DPST NONLIGHTED
16 1 LAMPHOLDER 660W 600V
17 1 BULB 50W 230V.
HEATER COLD RESISTANCE BETWEEN HR1-1 AND HR1-3
HEATER PART NO. WATTS OHMS
34247439 1100 47
34247440 1600 32.5
34247441 1900 27.2
Jouan
170 Marcel Drive Winchester, VA 22602
DWG. TITLE
CONTROL WIRING DIAGRAM
THELCO DIGITAL OVENS
MECHANICAL AND GRAVITY, 230 V
SIZE A
SHEET 1 OF 1
SCALE NONE.
DWG. NO. 390101
REV. B
INNER CHAMBER LIGHT ON/OFF SWITCH
POWER ON/OFF SWITCH
LINE 230 V. 60 HZ.
GREEN
WHITE
BLACK
FRAME GROUND
BLK
WHT
100 OHMS @ 0°C
138.5 OHMS @ 100°C
NOTE CORRECT ORIENTATION OF POWER ON/OFF SWITCH
NOTE CORRECT ORIENTATION OF LIGHT ON/OFF SWITCH
"ON" TOP
TOP OF CONTROL PANEL
TB1
HR1-3
HR1 HEATER
HR1-2
HR1-1
L1
MOTOR
ORN
YEL
GRN
HIGH LIMIT CONTROLLER
PRECISION SCIENTIFIC, INC.
PIN #1.
J201
J301
J302
J303
J304
J101
J102
J103
J104
J105
POWER SUPPLY PCB ASSY
P/N34372501
PRECISION SCIENTIFIC, INC.
CPU PCB
P/N 34381001

THERMO FISHER SCIENTIFIC STANDARD PRODUCT WARRANTY

The Warranty Period starts two weeks from the date your equipment is shipped from our facility. This allows for shipping time so the warranty will go into effect at approximately the same time your equipment is delivered. The warranty protection extends to any subsequent owner during the first year warranty period.

During the first year, component parts proven to be non-conforming in materials or workmanship will be repaired or replaced at Thermo's expense, labor included. Installation and calibration are not covered by this warranty agreement. The Technical Services Department must be contacted for warranty determination and direction prior to performance of any repairs. Expendable items, glass, filters and gaskets are excluded from this warranty.

Replacement or repair of components parts or equipment under this warranty shall not extend the warranty to either the equipment or to the component part beyond the original warranty period. The Technical Services Department must give prior approval for return of any components or equipment. At Thermo's option, all non-conforming parts must be returned to Thermo Electron Corporation postage paid and replacement parts are shipped FOB destination.

THIS WARRANTY IS EXCLUSIVE AND IN LIEU OF ALL OTHER WARRANTIES, WHETHER WRITTEN, ORAL OR IMPLIED. NO WARRANTIES OF MERCHANTABILITY OR FITNESS FOR A PARTICULAR PURPOSE SHALL APPLY. Thermo shall not be liable for any indirect or consequential damages including, without limitation, damages relating to lost profits or loss of products.

Your local Thermo Sales Office is ready to help with comprehensive site preparation information before your equipment arrives. Printed instruction manuals carefully detail equipment installation, operation and preventive maintenance.

If equipment service is required, please call your Technical Services Department at 1-888-213-1790 (USA and Canada) or 1-740-373-4763. We're ready to answer your questions on equipment warranty, operation, maintenance, service and special application. Outside the USA, contact your local distributor for warranty information.

Rev. 3 2/07

ISO 9001 REGISTERED

THERMO FISHER SCIENTIFIC INTERNATIONAL DEALER WARRANTY

The Warranty Period starts two months from the date your equipment is shipped from our facility. This allows for shipping time so the warranty will go into effect at approximately the same time your equipment is delivered. The warranty protection extends to any subsequent owner during the first year warranty period. Dealers who stock our equipment are allowed an additional six months for delivery and installation, provided the warranty card is completed and returned to the Technical Services Department.

During the first year, component parts proven to be non-conforming in materials or workmanship will be repaired or replaced at Thermo's expense, labor excluded. Installation and calibration are not covered by this warranty agreement. The Technical Services Department must be contacted for warranty determination and direction prior to performance of any repairs. Expendable items, glass, filters, reagents, tubing, and gaskets are excluded from this warranty.

Replacement or repair of components parts or equipment under this warranty shall not extend the warranty to either the equipment or to the component part beyond the original warranty period. The Technical Services Department must give prior approval for return of any components or equipment. At Thermo's option, all non-conforming parts must be returned to Thermo postage paid and replacement parts are shipped FOB destination.

THIS WARRANTY IS EXCLUSIVE AND IN LIEU OF ALL OTHER WARRANTIES, WHETHER WRITTEN, ORAL OR IMPLIED. NO WARRANTIES OF MERCHANTABILITY OR FITNESS FOR A PARTICULAR PURPOSE SHALL APPLY. Thermo shall not be liable for any indirect or consequential damages including, without limitation, damages relating to lost profits or loss of products.

Your local Thermo Sales Office is ready to help with comprehensive site preparation information before your equipment arrives. Printed instruction manuals carefully detail equipment installation, operation and preventive maintenance.

If equipment service is required, please call your Technical Services Department at 1-888-213-1790 (USA or Canada), or 1-740-373-4763. We're ready to answer your questions on equipment warranty, operation, maintenance, service and special application. Outside the USA, contact your local distributor for warranty information.

Rev. 3 2/07

ISO 9001 REGISTERED

Thermo Fisher Scientific
Controlled Environment Equipment
401 Millcreek Road, Box 649
Marietta, Ohio 45750
United States

www.thermofisher.com