Model 6520 Series

Economy Oven

Operating and Maintenance Manual

3177886 Rev. F

Analyze • Detect • Measure • Control™

Thermo
ELECTRON CORPORATION

Models Covered By This Manual

Current Model Number	Previous Model Number	Voltage
6520	14EG	120V
6521	14EG	230V
6522	25EG	120V
6523	25EG	230V
6524	45EG	120V
6525	45EG	230V
6526	25EM	120V
6527	25EM	230V
6528	45EM	120V
6529	45EM	230V

MANUAL NUMBER 3177886

REV	ECR/ECN	DATE	DESCRIPTION	By
F	23443	5/06	Removed CE symbol and declaration	ccs
--	23496	5/06	Matched electrical specs to UL report	ccs
E	--	8/05	New manual number (previous number 36100121) and manufacture location	
D	--	9/04	Corrected safety thermostat callout - pages 12, 13	
C	020809A	11/02	High limit cutout for Models 6522/6523, 6524/6525, 6526/6527, 6528/6529, replaced by hydraulic thermostat - pages 2, 5, 7, 8, 11	
B	--	11/01	Add “plastics can melt” on page 6	
A	--	6/99	Initial release	

Important Read this instruction manual. Failure to read, understand and follow the instructions in this manual may result in damage to the unit, injury to operating personnel, and poor equipment performance. ▲

Caution All internal adjustments and maintenance must be performed by qualified service personnel. ▲

Material in this manual is for information purposes only. The contents and the product it describes are subject to change without notice. Thermo Electron Corporation makes no representations or warranties with respect to this manual. In no event shall Thermo be held liable for any damages, direct or incidental, arising out of or related to the use of this manual.

©2003 Thermo Electron Corporation. All rights reserved.

Important operating and/or maintenance instructions. Read the accompanying text carefully.

Potential electrical hazards. Only qualified persons should perform procedures associated with this symbol.

Equipment being maintained or serviced must be turned off and locked off to prevent possible injury.

Hot surface(s) present which may cause burns to unprotected skin, or to materials which may be damaged by elevated temperatures.

Marking of electrical and electronic equipment, which applies to electrical and electronic equipment falling under the Directive 2002/96/EC (WEEE) and the equipment that has been put on the market after 13 August 2005.

This product is required to comply with the European Union's Waste Electrical & Electronic Equipment (WEEE) Directive 2002/96/EC. It is marked with the WEEE symbol. Thermo Electron has contracted with one or more recycling/disposal companies in each EU Member State European Country, and this product should be disposed of or recycled through them. Further information on Thermo Electron's compliance with this directive, the recyclers in your country and information on Thermo Electron products will be available at www.thermo.com.

- ✔ Always use the proper protective equipment (clothing, gloves, goggles, etc.)
- ✔ Always dissipate extreme cold or heat and wear protective clothing.
- ✔ Always follow good hygiene practices.
- ✔ Each individual is responsible for his or her own safety.

Do You Need Information or Assistance on Thermo Electron Corporation Products?

If you do, please contact us 8:00 a.m. to 6:00 p.m. (Eastern Time) at:

1-740-373-4763	Direct
1-888-213-1790	Toll Free, U.S. and Canada
1-740-373-4189	FAX
http://www.thermo.com/forma	Internet Worldwide Web Home Page
services.controlenv@thermo.com	Service E-Mail Address

Our **Sales Support** staff can provide information on pricing and give you quotations. We can take your order and provide delivery information on major equipment items or make arrangements to have your local sales representative contact you. Our products are listed on the Internet and we can be contacted through our Internet home page.

Our **Service Support** staff can supply technical information about proper setup, operation or troubleshooting of your equipment. We can fill your needs for spare or replacement parts or provide you with on-site service. We can also provide you with a quotation on our Extended Warranty for your Thermo products.

Whatever Thermo products you need or use, we will be happy to discuss your applications. If you are experiencing technical problems, working together, we will help you locate the problem and, chances are, correct it yourself...over the telephone without a service call.

When more extensive service is necessary, we will assist you with direct factory trained technicians or a qualified service organization for on-the-spot repair. If your service need is covered by the warranty, we will arrange for the unit to be repaired at our expense and to your satisfaction.

Regardless of your needs, our professional telephone technicians are available to assist you Monday through Friday from 8:00 a.m. to 6:00 p.m. Eastern Time. Please contact us by telephone or fax. If you wish to write, our mailing address is:

Thermo Electron Corporation
Controlled Environment Equipment
Millcreek Road, PO Box 649
Marietta, OH 45750

International customers, please contact your local Thermo Electron distributor.

Table of Contents

Section 1 Introduction 1-1

Section 2 Unpacking and Damage 2-1

Section 3 General Information 3-1

Section 4 Specifications 4-1

Section 5 Installation 5-1
Location 5-1
Electrical Connections 5-1

Section 6 Explanation of Controls 6-1

Section 7 Operation 7-1
Loading 7-2
Safety 7-2

Section 8 Maintenance and Servicing 8-1
Temperature Variance or Fluctuation 8-1
Heat Loss 8-1
Heater Resistance Check 8-2

Section 9 Parts Replacement 9-1
Heater Replacement 9-1
Probe Replacement 9-1
Motor Replacement 9-2
Control Replacement 9-2
Thermostat Replacement 9-3
Door and Latch Repair 9-4

Section 10 Electrical Drawings 10-1

Section 1 Introduction

Your satisfaction and safety are important to Thermo and a complete understanding of this unit is necessary to attain these objectives.

As the user of this apparatus, you have the responsibility to understand the proper function and operational characteristics of it. This instruction manual should be thoroughly read and all operators given adequate training before attempting to place this unit in service. Awareness of the stated cautions and warnings, and compliance with recommended operating parameters -- together with maintenance requirements -- are important for safe and satisfactory operation. The unit should be used for its intended application; alterations or modifications will VOID THE WARRANTY.

Warning As a routine laboratory precaution, always wear safety glasses when working with this apparatus. ▲

This product is not intended, nor can it be used, as a sterile or patient connected device. In addition, this apparatus is not designed for use in Class I, II or III locations as defined by the National Electrical Code.

Section 2 Unpacking and Damage

Save all packing material if apparatus is received damaged. This merchandise was carefully packed and thoroughly inspected before leaving our factory.

Responsibility for safe delivery was assumed by the carrier upon acceptance of the shipment; therefore, claims for loss or damage sustained in transit must be made upon the carrier by the recipient as follows:

1. Visible Loss or Damage: Note any external evidence of loss or damage on the freight bill, or express receipt, and have it signed by the carrier's agent. Failure to adequately describe such external evidence of loss or damage may result in the carrier's refusing to honor your damaged claim. The form required to file such claim will be supplied by the carrier.

2. Concealed Loss or Damage: Concealed loss or damage means loss or damage which does not become apparent until the merchandise has been unpacked and inspected. Should either occur, make a written request for inspection by carrier's agent within fifteen (15) days of the delivery date; then file a claim with the carrier since the damage is the carrier's responsibility.

If you follow the above instructions carefully, we will guarantee our full support of your claim to be compensated for loss or concealed damage.

DO NOT -- FOR ANY REASON -- RETURN THIS UNIT WITHOUT FIRST OBTAINING AUTHORIZATION. In any correspondence to Thermo, please supply the nameplate data, including catalog number and serial number.

Section 3 General Information

This instruction manual includes information on the following models and their specific electrical characteristics.

Models 6520/6521, 6522/6523, and 6524/6525 employ gravity convection as a method of heat transfer. Gravity convection is defined as the natural tendency for heated air to rise due to it's change in density and mass.

> Air is drawn into the chamber through openings in the bottom of the oven and then heated as it passes over the electric heating coils and up through the openings in the diffuser panel located on the bottom of the inner chamber. A limited amount of heated air is exhausted out of the top of the chamber through the vent shutter cap and the remaining air recirculates within the chamber.
>
> Gravity convection ovens are ideal where forced air circulation cannot be tolerated and for situations demanding gentle curing or long term sample storage under closely controlled conditions. Gravity convection ovens are ideal for drying powders, soil samples, paper goods, semiconductors and cosmetics.

Models 6526/6527 and 6528/6529 use mechanical convection as a method of heat transfer. Mechanical convection can be defined as a positive and planned directional air flow or forced air circulation within the chamber.

> Air is drawn into the chamber through vent tubes located in the bottom of the oven and is heated as it passes over the electric heating coils. The air is blown through openings in the bottom of the inner chamber. A limited amount of heated air is exhausted out the top of the chamber through the vent shutter cap and the remaining air recirculates within the chamber.
>
> Mechanical convection ovens provide the most efficient means of heat transfer as well as the most reproducible test conditions for repeat operations. Mechanical convection allows for rapid heat up time for high density loads, shortened recovery periods after door openings and improved uniformity for extremely heat sensitive samples.

All models use a hydraulic thermostat for temperature safety limit control.

Section 4 Specifications

Model Number	6520/6521	6522/6523	6526/6527	6524/6525	6528/6529
Convection Technique	Gravity	Gravity	Mechanical	Gravity	Mechanical
Temperature Control	Hydraulic	Electronic	Electronic	Electronic	Electronic
Temperature Display	0° to 250°C Thermometer	0° to 250°C Thermometer	0° to 250°C Thermometer	0° to 250°C Thermometer	0° to 250°C Thermometer
Temperature					
Range, Sensitivity	65° to 210°C, ±0.5°C	65° to 210°C, ±0.3°C	50° to 210°C, ±0.3°C	65° to 210°C, ±0.3°C	50° to 210°C, ±0.3°C
Dimensions (LxWxH)					
Chamber	14 x 12.5 x 13.75 in.	15.5 x 18.5 x 15 in.	15.5 x 18.5 x 15 in.	15.5 x 18.5 x 27 in.	15.5 x 18.5 x 27 in.
	356 x 318 x 349 mm	390 x 470 x 380 mm	390 x 470 x 380 mm	390 x 470 x 685 mm	390 x 470 x 685 mm
Shelf (each)	13.5 x 12.5 in.	15.5 x 18 in.	15.5 x 18 in.	15.5 x 18 in.	15.5 x 18 in.
	343 x 318 mm	390 x 455 mm	390 x 455 mm	390 x 455 mm	390 x 455 mm
Exterior*	19.5 x 18 x 28 in	21.5 x 24 x 28 in.	21.5 x 24 x 28 in.	21.5 x 24 x 28 in.	21.5 x 24 x 28 in.
	495 x 457 x 711 mm	550 x 610 x 715 mm	550 x 610 x 715 mm	550 x 610 x 715 mm	550 x 610 x 715 mm
Net Weight	69 lbs., 31 kg	93 lbs., 42.4 kg	103 lbs., 46.7 kg	120 lbs., 54.4 kg	130 lbs., 59 kg
Chamber Volume	1.4 cu.ft.	2.5 cu.ft.	2.5 cu.ft.	4.5 cu.ft.	4.5 cu.ft.
	39 liters	71.5 liters	71.5 liters	129 liters	129 liters
Shelves**					
Supplied	2	2	2	2	2
Maximum	6	6	6	10	10
Electrical Data* (all models 50/60 Hz)**					
115V	0.8 kW, 7.1 A	1.1 kW, 10.4 A	1.3 kW, 11.3 A	1.7 kW, 14.8 A	1.8 kW,15.6 A
230V	0.8 kW, 3.5 A	1.1 kW, 5.2 A	1.3 kW, 5.6 A	1.7 kW, 7.4 A	1.8 kW, 7.8 A
Shipping Data					
Dimensions	24 x 23 x 30 in.	25 x 26 x 31.5 in.	25 x 26 x 31.5 in.	25 x 26 x 43.5 in.	25 x 26 x 43.5 in.
(LxWxH)	609 x 584 x 762 mm	635 x 660 x 800 mm	635 x 660 x 800 mm	635 x 660 x 1105 mm	635 x 660 x 1105 mm
Weight	79 lbs., 35.5kg	117 lbs., 53.1 kg	127 lbs., 59.6 kg	145 lbs., 65.8 kg	155 lbs., 70.3 kg
Volume	9.8 cu.ft.	11.7 cu.ft.	11.7 cu.ft.	16.3 cu.ft. cu.ft.	16.3 cu.ft.
	0.28 cu. meters	0.33 cu. meters	0.33 cu. meters	0.46 cu. meters	0.46 cu. meters
Catalog Number					
115 V	3166767	3166769	3166773	3166771	3166775
230 V	3166768	3166770	3166774	3166772	3166776

* Exterior height includes vent cap and adjustable feet

** Spacing between shelves is 2 inches (50mm)

*** All ovens equipped with line cord and plug

Section 5 Installation

Warning Installation should be completed by qualified personnel only. ▲

Location

The most uniform operating conditions will be obtained by placing the oven in an area remote from drafts, ventilating outlets, radiators, and other rapidly changing ambient conditions. To assure proper ventilation, allow a minimum of three (3) inches of clearance between the rear, top and sides of the oven and adjacent walls. If two or more ovens are to be placed side by side, then allow six (6) inches between them. The four legs on the bottom of the oven can be turned to raise or lower the corners so that it sits level on the table.

Electrical Connections

1. The 14EG, 25EG and 25EM are provided with a 120V, 15 amp, three-prong (grounding) plug. The 45EG and 45 EM come equipped with a 120V, 20 amp, three-prong (grounding) plug. Both plug configurations are industry standard, and mate with standard three-prong grounding wall receptacles to minimize the possibility of electric shock hazard from this apparatus. If in doubt the user should have the wall receptacle and circuit checked by a qualified electrician to make sure the receptacle can provide adequate current and is properly grounded.

Warning For personal safety this apparatus must be properly grounded. ▲

2. When a standard two-prong wall receptacle is encountered, it is the personal responsibility and obligation of the user to have it replaced with a properly grounded three-prong wall receptacle. Do not, under any circumstances, cut or remove the third (ground) prong from the power cord. Do not use a two-prong adapter plug.

3. Determine the total amount of current being used by other apparatus connected to the circuit to be used for this apparatus. It is critical that the added current demand of this (see nameplate) and other equipment on the same circuit does not exceed the rating of the fuse or circuit breaker.

Caution Be sure that the power supply is the same voltage as specified on the nameplate. ▲

Section 6 Explanation of Controls

On/Off Switch - The on/off switch controls the flow of all electric power to the oven. The blower motor in the mechanically convected models will always be in operation with the power switch ON.

Three-Heat Switch - Model 6250 Series has a three heat switch. This switch also functions as the main "on/off" switch. With this switch it is possible to supply maximum wattage to the unit for initial heat-up and then reduce the wattage when operating temperature is reached. Low setting may be used for temperatures up to approximately 115°C, medium setting from 115°C to 175°C and high setting above 175°C. Most uniform control is achieved when setting is just high enough to maintain desired temperature.

Temperature Control Knob - The Temperature Control knob is used to set the operating temperature. Numerical graduations do not refer to any specific temperature but are simply for reference. As you become familiar with operating your oven, record dial settings which correspond to your preferred operating temperatures.

Temperature Control Pilot Lamp - When the lamp above the Temperature Control is illuminated, this indicates electric current is being applied to the heater. It is normal for this lamp to cycle on and off during the operation of the oven.

Safety Control Knob - Model 6250 Series has a safety control knob to set the desired safety control temperature.

Safety Cutout Pilot Lamp - When the Safety Cutout Pilot Lamp is illuminated, this indicates that either the Temperature Control Thermostat or sensor has failed and that the oven is controlling from the Safety Controller.

Glass Thermometer - Used to indicate oven temperature and determine proper thermostat settings.

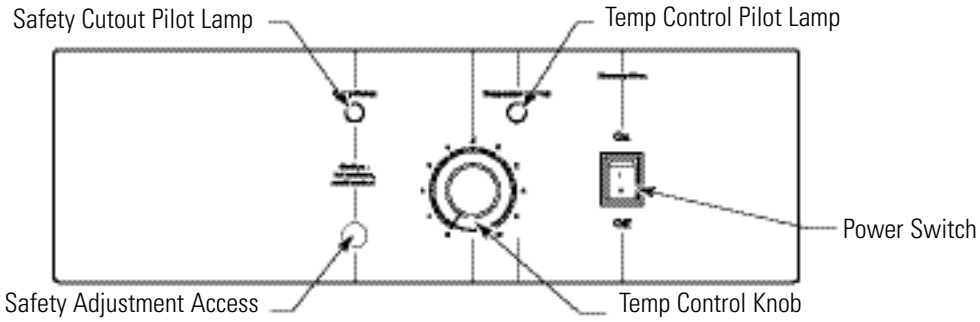

Figure 6-1. Controls

Section 7 Operation

Fully open the exhaust vent shutter cap on the oven top. Keep it open at all times. However, if running the oven at maximum rated temperature, it may be necessary to turn the cap to a more closed position to retain heat.

Insert shelf supports into the holes in the side walls of the inner chamber. Insert the shelves into the shelf supports and try to keep an equal distance between shelves whenever possible. Never cover the shelves with foil or reduce their open surface area by more than 75%, as this will greatly reduce convection, causing uniformity and control to suffer.

Insert the provided thermometer through the hole in the vent shutter cap so that the three metal fingers punched in the cap converge toward the center of the cap and the thermometer's glass ring rests on the cap top. The metal fingers may have to be bent slightly to grip the thermometer.

1. Press the ON/OFF power switch to the ON position. For Model 6520/6521 only, select the desired temperature range.

2. Rotate the safety control adjustment fully clockwise.

3. Rotate the Temperature Control knob to some median position.

4. Allow the chamber sufficient time to heat, while observing the temperature on the thermometer in the vent cap. The lamp above the Temperature Control knob should turn on and off at regular intervals, indicating the control has stabilized at a particular set point.

5. If the thermometer indicates that the chamber temperature is below the desired set point and the lamp above the Temperature Control has been turning on and off, rotate the Temperature Control slightly in a clockwise direction. Turn the Temperature Control slightly counterclockwise if the thermometer indicates the chamber temperature is above the desired set point.

6. Set the safety adjustment: When the thermometer indicates the chamber is at the desired temperature and the lamp above the temperature control is cycling on and off at fairly uniform intervals, turn the safety adjustment slowly counterclockwise. At the moment the safety lamp illuminates, the lamp above the temperature control turns off. Rotate clockwise until the lamp above the safety adjustment is off and the lamp above the temperature control is back on. The safety limit is now been set.

When you are finished using the oven, simply press the ON/OFF power switch to the OFF position. The temperature controls can be left in their set positions if operation is to be resumed at that temperature later.

Loading

Although the gravity and mechanical convection ovens rely on different methods of air circulation, general loading procedures are applicable to both types and must be followed. It is important for uniformity and recovery that air circulation within the chamber is not restricted.

1. At least one (1) inch (2.5 cm) should be left between objects placed on the shelves.

Note Within the mechanical convection cabinets, objects should not be placed on the shelves in such a manner to block the movement of heated air into the chamber. ▲

2. The bottom floor of the chamber must be kept free and clear of objects and never used as a shelf.

3. At no time should solid shelves be substituted for provided shelves. Additional shelves and shelf supports are available from Thermo.

Safety

1. DO NOT place any explosive, combustible or flammable materials in this chamber.

2. DO NOT place sealed containers in the chamber. Sealed containers, filled with materials, do not provide room from expansion or evaporation and can develop dangerous vapor pressure as temperature increases.

3. Avoid placing plastic materials in the oven. Extreme temperatures may cause plastics to melt, posing a fire hazard. If plastics are placed in the oven, do not leave the oven unattended.

4. Avoid spillage of liquids or powders within the chamber. Clean all spills as soon as possible. Use caution if oven is still hot.

5. DO NOT evaporate noxious or poisonous fumes.

6. These ovens are not intended for food service or preparation of meals.

7. DO NOT store containers filled with acidic or caustic solutions within the chambers, as vapors from these materials will attack the chamber interior and electrical components, thus voiding the warranty.

Section 8 Maintenance and Servicing

Warning Dangerous voltages exist within this unit. Service should be performed only by qualified personnel. Disconnect the unit from its electrical source. Remove the shelves and thermometer if installed. Disconnecting any component from the circuit without prior removal of the power source may cause damage to other circuit components. ▲

Temperature Variance or Fluctuation

1. Make sure vent shutter cap is not closed. Open to the maximum position.
2. Test unit when empty; if results are satisfactory the chamber was improperly loaded. Redistribute the load.
3. Be sure to allow ample time for an empty chamber to stabilize at the desired temperature setting. It could take over one hour to equilibrate depending upon the differences between ambient and operating temperatures. The mass of the load can also affect stabilization time.
4. Make certain severe line voltage fluctuations are not occurring.
5. Make certain all wire connections are secure at their terminals.
6. Make certain that an intermittent failure of the switch, thermostat or wiring has not occurred. Isolate the cause; repair or replace.

Heat Loss

Inspect door gasket to make certain it fits firmly against the cabinet at all points. Replace gasket if torn or damaged.

Improper Door Closure - Inspect spring-loaded door latches to see if the door is pulled tightly against the oven body. If the "finger" of the latch (in the door) has been sprung into the body of the latch, use a pen or similar object to pop it back out. Check the oven cabinet to see that it is level. Use a spirit level and adjust the four feet on the oven bottom, if needed.

No Heat - If the chamber does not heat, first check the line voltage, circuit breakers and/or fuses of the line circuit. Check if all electrical connections are secure.

Heater Resistance Check

Warning Disconnect oven from its power source before proceeding. Refer to the appropriate wiring diagram at the end of the manual and locate the electrical leads for the heater. Use the values in the Heater Cold Resistance Table to find the appropriate value. Be sure to disconnect at least one heater lead from the terminal strip before taking the rating with your ohm meter. Again, it is imperative that the unit be completely disconnected from its electrical power source before any readings are taken. ▲

If the heater is open (infinite resistance), it should be replaced. If the heater reads less than five ohms, it is shorted and should be replaced. Check the resistance between each lead of the heater and a base metal point on the oven chassis. If there is less than infinite resistance (a million ohms or greater) between the heater and chassis, the heater is shorted to the ground and should be replaced. Also, inspect all wires leading to the heater for signs of shorting or electrical contact to chassis of oven.

Section 9 Parts Replacement

Replacement procedures for various components follow.

Heater Replacement

1. Disconnect power.
2. Remove the clamps securing the thermostat bulbs to the floor. Carefully bend the bulbs to a vertical position.
3. Remove two screws securing control panel. Carefully lift control panel and lay it on it's face. Remove ten screws that secure floor and lift out.

   Model 6520/6521 only: Remove three screws securing the front z-bracket,screws are located directly above the control panel. Remove one screw on back wall that secures the oven floor. Lift bottom floor straight up and out to remove it.
4. Disconnect heater terminals and heater mounting screws. Carefully lift straight up and out.
5. Replace with new heater, reinstall in reverse order.

Probe Replacement

Note This procedure is not applicable to Model 6520/6521. ▲

1. Disconnect power.
2. Remove back panel screws.
3. Pull probe straight out.
4. Open control panel by removing top screws that secure it and disconnect probe terminals.
5. Replace with new probe, reinstall in reverse order.

Motor Replacement

Note The following procedure applies to mechanical models only. ▲

1. Disconnect power.
2. Open control panel by removing top screws that secure it and disconnect motor and heater terminals.
3. Remove screws that secure lower floor and lift out.
4. Disconnect/remove heater mounting screws. Remove heater and wires.
5. Detach blower wheel from motor shaft.
6. Turn oven on its back or side and remove bottom plate. Remove motor mounting bracket from underside of oven.
7. Replace with new motor, reinstall in reverse order.

Control Replacement

Note The following procedure does not apply to Model 6520/6521. ▲

1. Disconnect power
2. Open control panel by removing top screws that secure it and disconnect leads to control PCB.
3. Remove control PCB.
4. Replace with new control PCB. Reinstall in reverse order.

Thermostat Replacement

1. UNPLUG UNIT FROM ELECTRICAL SOURCE.

2. Loosen thermostat bulbs by removing two clamps secured to chamber bottom floor.

3. Remove two screws securing control panel. Carefully lift control panel and lay it on it's face.

4. Remove ten screws that secure floor and lift out. Be careful with the thermostat bulb.

   Model 6520/6521: Remove three screws securing the front z-bracket (screws are located directly above the control panel). Remove screw securing the oven floor. Lift bottom floor straight up and out. Be careful with the thermostat bulbs.

5. Remove knobs by loosening two setscrews on each knob (Model 6520/6521 only).

6. Tag lead wires and detach from thermostats.

7. Remove thermostat bracket from control panel. Remove thermostat from bracket. Remove knob from thermostat.

   Model 6520/6521: Remove screws securing thermostat to control panel. Remove two screws securing angle cover, located inside of inner chamber on the front left side. This will give you room to pull thermostat bulbs out.

8. Pull thermostat bulbs through chamber and out the front.

9. Retrace preceding steps to install the new thermostat assembly.

Caution Do not crimp or sharply bend capillaries. Provide adequate clearance between capillary and heater coils to prevent electrical short. ▲

Door and Latch Repair

To replace **door assembly**, follow procedure below.

1. Disconnect power
2. Remove door by unscrewing top hinge plate, be careful to hold door while removing hinge.
3. Lift door off lower hinge.
4. Replace door in reverse order.

To replace **door latches**, follow the steps below.

1. Replace door gasket by removing the screws that secure inner door liner. Reassemble in reverse order.
2. Replace door latches by removing inner door liner, door gasket and door insulation.
3. Unscrew door latch clips and replace latches.
4. Reassemble in reverse order.

To replace **door handle**, follow the procedure below.

1. Replace door handle by removing inner door liner, door gasket and door insulation.
2. Remove screws that secure door handle and replace handle.
3. Reassemble in reverse order.

See the steps below to replace the **door latch grabber** on the body of the unit.

1. Disconnect power.
2. Remove screws that secure door latch grabber and remove them from front.

Note Used retaining nuts will fall into oven body. ▲

3. Insert replacement latch assembly through open slot and fasten with screws and washers provided.

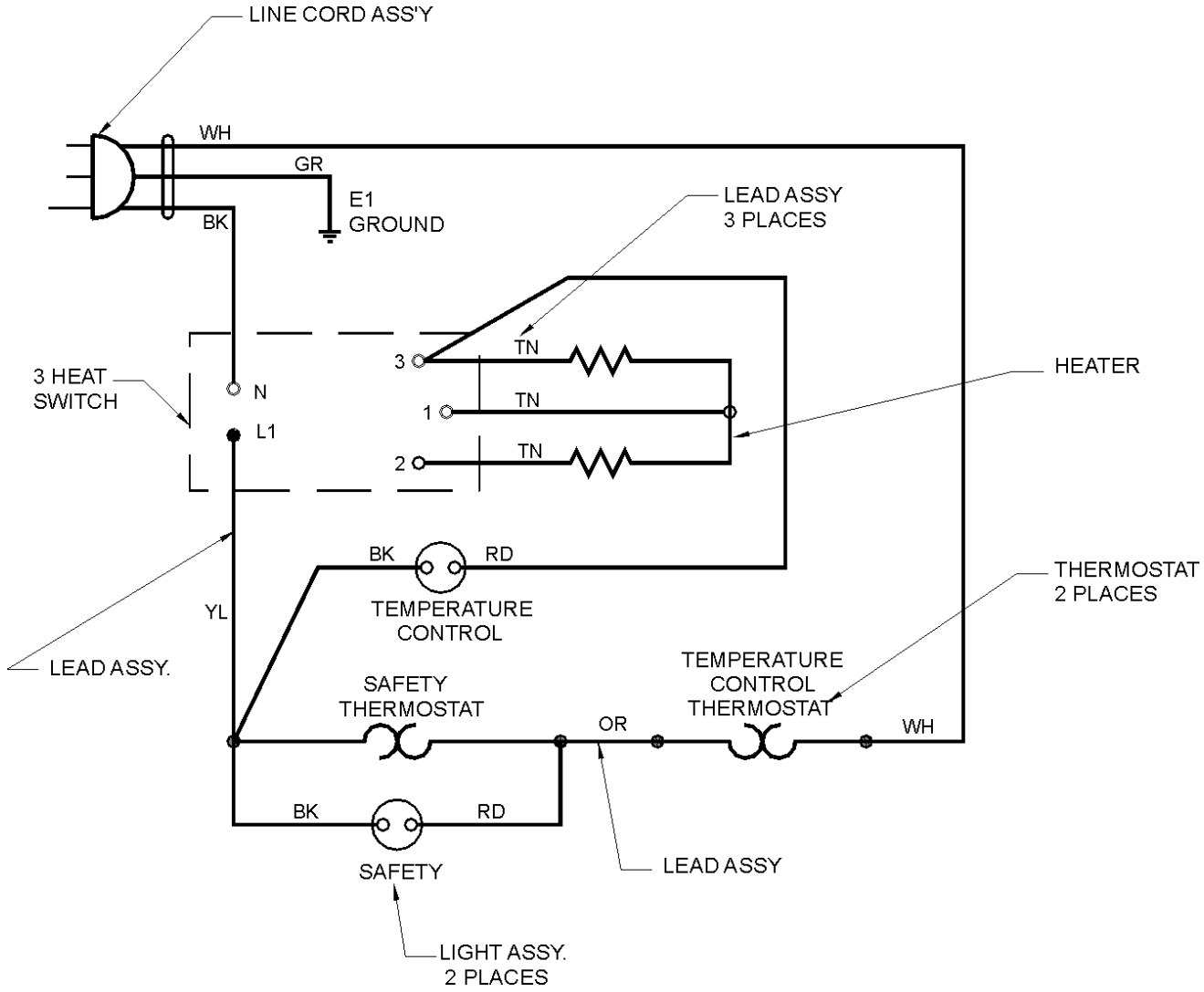

INTERNAL SWITCH CONNECTIONS

OFF	N →	NO CONNECTION
	LI →	NO CONNECTION
LOW	N →	3
	LI →	2
MED	N →	3
	LI →	1
HIGH	N →	2 & 3
	LI →	1

WIRING DIAGRAM - MODEL 6520/6521

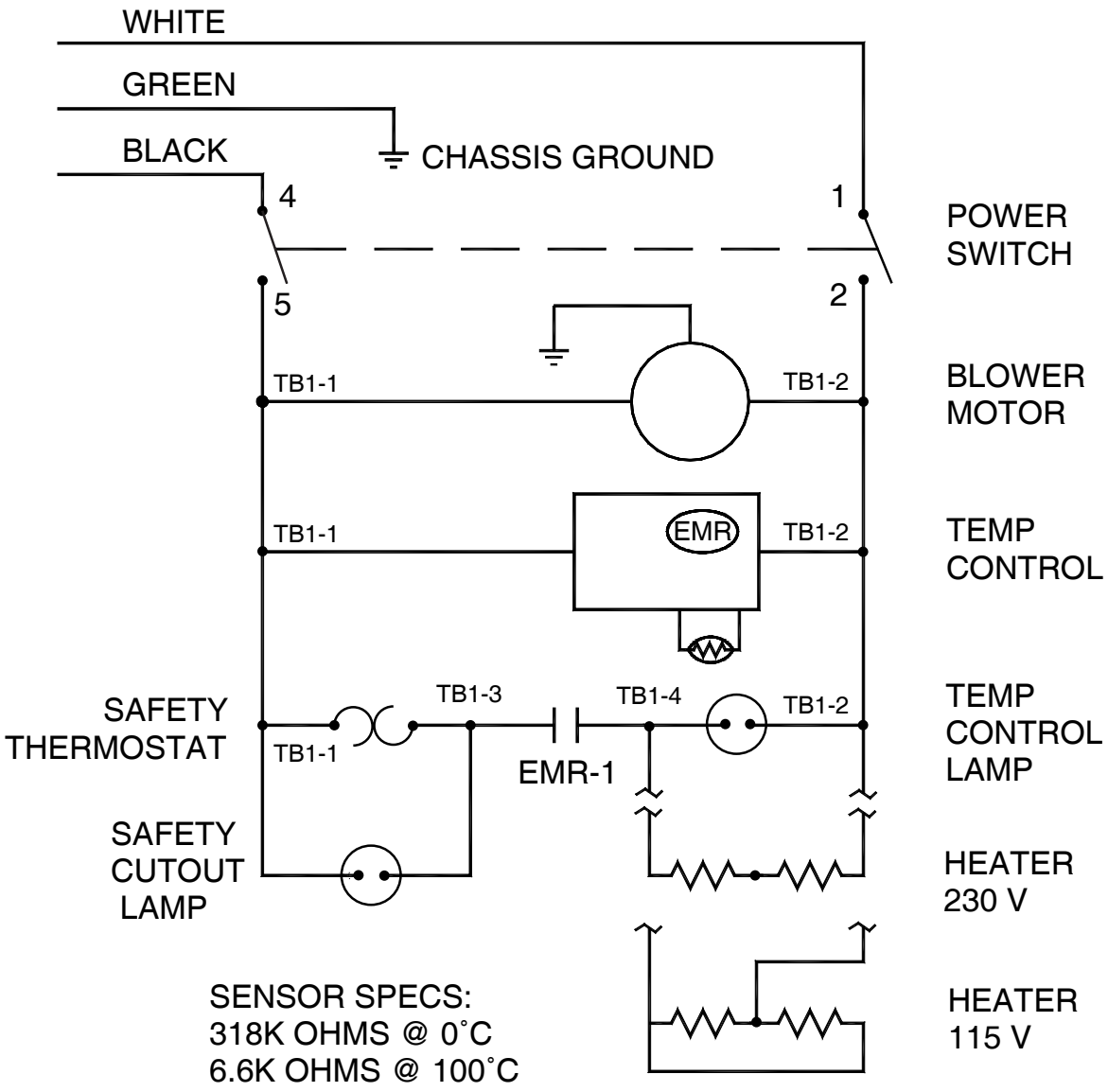

HEATER COLD RESISTANCE BETWEEN TB1-4 AND TB1-2		
HEATER PART NO.	WATTS	OHMS
34247439	1100	47
34247440	1600	32.5

WIRING DIAGRAM

DOES NOT APPLY TO MODEL 6520/6521

REPLACEMENT PARTS LIST - ECONOMY OVEN - ALL MODELS			
	MODEL 6520/6521	**MODEL 6522/6523, 6526/6527**	**MODEL 6524/6525, 6528/6529**
VENT SHUTTER CAP	3177386		
DOOR HANDLE	3174923		
KNOB, TEMPERATURE CONTROL	3174903		
THERMOMETER 0-250°C	3175996		
TOP HINGE	316231		
BOTTOM HINGE	316232		
DOOR HINGE BUSHING	3177622		
SHELF KIT	3166212	3166214	
HEATER ASSY, 115V	3175450	3175511	3175512
HEATER ASSY, 220V	3175473	3175511	3175512
LATCH REPLACEMENT KIT	3167037		
SHELF SUPPORT	316239	316225	
WIRE SHELF	3177372	3177585	
DOOR GASKET	3174681		
SAFETY THERMOSTAT	3175234		
SWITCH, DPST, NON-LIGHTED	N/A	3175318	
SWITCH, 3 HEAT	3175269	N/A	
LEVELING FOOT, 5/16 - 18	3175336		
TEMPERATURE CONTROLLER	3175234	3176730	
TEMPERATURE SENSOR	N/A	3176735	
ECONOMY OVEN HARNESS	N/A	3176727	
TERM BLOCK 6 POSITION	N/A	3175416	
DOOR SUPPORT ANGLE	316236		
DOOR STRIKER ANGLE	316237		
LIGHT ASSEMBLY, 115V	3162435	3162433	
LIGHT ASSEMBLY, 230V	3162436	3162434	
KIT, OVEN PACKAGING	3167299	3167252	3167253
CORD SET 115V	3165481	3176552	3176562
CORD SET 220V	3165488	3176559	
MECHANICAL MODELS ONLY			
BLOWER WHEEL	N/A	3175897	
MOTOR ASSY, 115V	N/A	3166987	
MOTOR ASSY, 230V	N/A	3167015	

THERMO ELECTRON CORPORATION STANDARD PRODUCT WARRANTY

The Warranty Period starts two weeks from the date your equipment is shipped from our facility. This allows for shipping time so the warranty will go into effect at approximately the same time your equipment is delivered. The warranty protection extends to any subsequent owner during the first year warranty period.

During the first year, component parts proven to be non-conforming in materials or workmanship will be repaired or replaced at Thermo's expense, labor included. Installation and calibration are not covered by this warranty agreement. The Technical Services Department must be contacted for warranty determination and direction prior to performance of any repairs. Expendable items, glass, filters and gaskets are excluded from this warranty.

Replacement or repair of components parts or equipment under this warranty shall not extend the warranty to either the equipment or to the component part beyond the original warranty period. The Technical Services Department must give prior approval for return of any components or equipment. At Thermo's option, all non-conforming parts must be returned to Thermo Electron Corporation postage paid and replacement parts are shipped FOB destination.

THIS WARRANTY IS EXCLUSIVE AND IN LIEU OF ALL OTHER WARRANTIES, WHETHER WRITTEN, ORAL OR IMPLIED. NO WARRANTIES OF MERCHANTABILITY OR FITNESS FOR A PARTICULAR PURPOSE SHALL APPLY. Thermo shall not be liable for any indirect or consequential damages including, without limitation, damages relating to lost profits or loss of products.

Your local Thermo Sales Office is ready to help with comprehensive site preparation information before your equipment arrives. Printed instruction manuals carefully detail equipment installation, operation and preventive maintenance.

If equipment service is required, please call your Technical Services Office at 1-888-213-1790 (USA and Canada) or 1-740-373-4763. We're ready to answer your questions on equipment warranty, operation, maintenance, service and special application. Outside the USA, contact your local distributor for warranty information.

ISO 9001 REGISTERED

Rev. 2 1/03

THERMO ELECTRON CORPORATION INTERNATIONAL DEALER WARRANTY

The Warranty Period starts two months from the date your equipment is shipped from our facility. This allows for shipping time so the warranty will go into effect at approximately the same time your equipment is delivered. The warranty protection extends to any subsequent owner during the first year warranty period. Dealers who stock our equipment are allowed an additional six months for delivery and installation, provided the warranty card is completed and returned to the Technical Services Department.

During the first year, component parts proven to be non-conforming in materials or workmanship will be repaired or replaced at Thermo's expense, labor excluded. Installation and calibration are not covered by this warranty agreement. The Technical Services Department must be contacted for warranty determination and direction prior to performance of any repairs. Expendable items, glass, filters, reagents, tubing, and gaskets are excluded from this warranty.

Replacement or repair of components parts or equipment under this warranty shall not extend the warranty to either the equipment or to the component part beyond the original warranty period. The Technical Services Department must give prior approval for return of any components or equipment. At Thermo's option, all non-conforming parts must be returned to Thermo postage paid and replacement parts are shipped FOB destination.

THIS WARRANTY IS EXCLUSIVE AND IN LIEU OF ALL OTHER WARRANTIES, WHETHER WRITTEN, ORAL OR IMPLIED. NO WARRANTIES OF MERCHANTABILITY OR FITNESS FOR A PARTICULAR PURPOSE SHALL APPLY. Thermo shall not be liable for any indirect or consequential damages including, without limitation, damages relating to lost profits or loss of products.

Your local Thermo Sales Office is ready to help with comprehensive site preparation information before your equipment arrives. Printed instruction manuals carefully detail equipment installation, operation and preventive maintenance.

If equipment service is required, please call your Technical Services Department at 1-888-213-1790 (USA or Canada), or 1-740-373-4763. We're ready to answer your questions on equipment warranty, operation, maintenance, service and special application. Outside the USA, contact your local distributor for warranty information.

ISO 9001 REGISTERED

Rev. 2 1/03

Thermo Electron Corporation
Controlled Environment Equipment
401 Millcreek Road
Marietta, Ohio 45750
United States

www.thermo.com