Thermo Scientific Programmable Vacuum Oven

Operating Manual 107568 (7006253 Rev. 3)

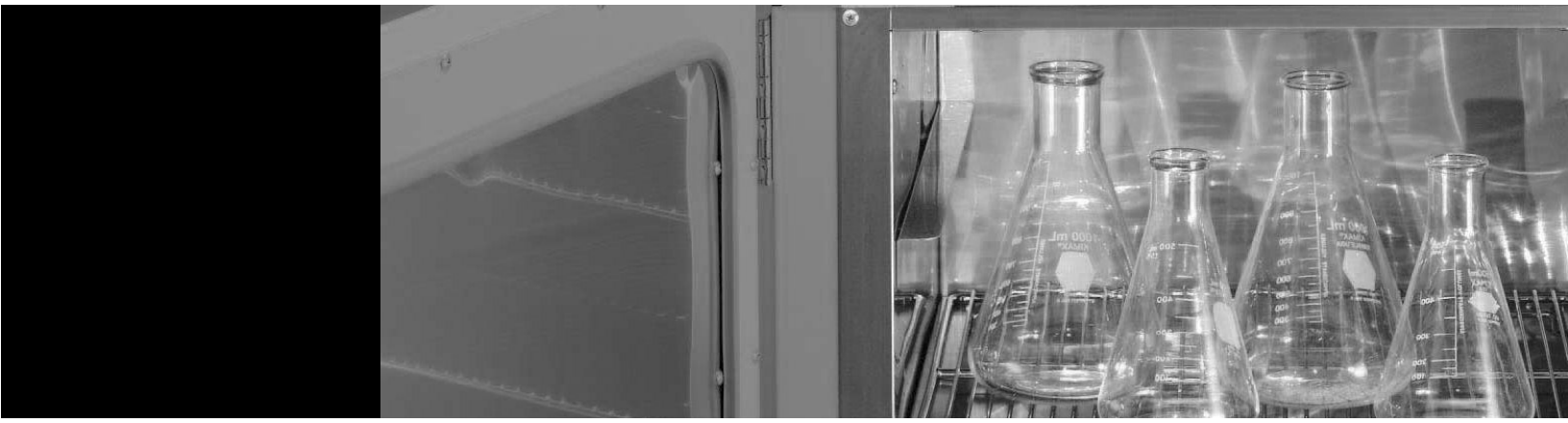

Visit us online to register your warranty
www.thermoscientific.com/warranty

Thermo
SCIENTIFIC

Models covered in this manual		
Catalog numbers	**Model numbers**	**Voltage**
3628A	6253	115V
3628A-1	6254	230V

MANUAL NUMBER 107568 (7006253)

REV	ECR/ECN	DATE	DESCRIPTION	By
3	ECNM-000078	8/02/18	Included correct vacuum in the temperature uniformity specification on page 1-2	TFI
2	28670	6/13/12	Update factory set heater runaway safety setting to 325°C, ±12° on pg 3-4	ccs
1	26565/SI-10360	11/1/10	Repl readout thermocouple kit w 255036	ccs
0	--	3/31/10	Transfer to Marietta (was 107568 2/9/09)	ccs

Important Read this instruction manual. Failure to read, understand and follow the instructions in this manual may result in damage to the unit, injury to operating personnel, and poor equipment performance. ▲

Caution All internal adjustments and maintenance must be performed by qualified service personnel. ▲

Material in this manual is for information purposes only. The contents and the product it describes are subject to change without notice. Thermo Fisher Scientific makes no representations or warranties with respect to this manual. In no event shall Thermo be held liable for any damages, direct or incidental, arising out of or related to the use of this manual.

©2018 Thermo Fisher Scientific. All rights reserved.

Important operating and/or maintenance instructions. Read the accompanying text carefully.

Potential electrical hazards. Only qualified persons should perform procedures associated with this symbol.

Equipment being maintained or serviced must be turned off and locked off to prevent possible injury.

Hot surface(s) present which may cause burns to unprotected skin, or to materials which may be damaged by elevated temperatures.

Marking of electrical and electronic equipment, which applies to electrical and electronic equipment falling under the Directive 2012/19/EU (WEEE) and the equipment that has been put on the market after 13 August 2005.

This product is required to comply with the European Union's Waste Electrical & Electronic Equipment (WEEE) Directive 2012/19/EU. It is marked with the WEEE symbol. Thermo Fisher Scientific has contracted with one or more recycling/disposal companies in each EU Member State European Country, and this product should be disposed of or recycled through them. Further information on Thermo's compliance with this directive, the recyclers in your country and information on Thermo products will be available at www.thermofisher.com.

- ✔ Always use the proper protective equipment (clothing, gloves, goggles, etc.)
- ✔ Always dissipate extreme cold or heat and wear protective clothing.
- ✔ Always follow good hygiene practices.
- ✔ Each individual is responsible for his or her own safety.

Do You Need Information or Assistance on Thermo Scientific Products?

If you do, please contact us 8:00 a.m. to 6:00 p.m. (Eastern Time) at:

1-740-373-4763	Direct
1-800-438-4851	Toll Free, U.S. and Canada
1-877-213-8051	FAX
http://www.thermofisher.com	Internet Worldwide Web Home Page
service.led.marietta@thermofisher.com	Tech Support Email Address
www.unitylabservices.com	Certified Service Web Page

Our **Sales Support** staff can provide information on pricing and give you quotations. We can take your order and provide delivery information on major equipment items or make arrangements to have your local sales representative contact you. Our products are listed on the Internet and we can be contacted through our Internet home page.

Our **Service Support** staff can supply technical information about proper setup, operation or troubleshooting of your equipment. We can fill your needs for spare or replacement parts or provide you with on-site service. We can also provide you with a quotation on our Extended Warranty for your Thermo Scientific products.

Whatever Thermo Scientific products you need or use, we will be happy to discuss your applications. If you are experiencing technical problems, working together, we will help you locate the problem and, chances are, correct it yourself...over the telephone without a service call.

When more extensive service is necessary, we will assist you with direct factory trained technicians or a qualified service organization for on-the-spot repair. If your service need is covered by the warranty, we will arrange for the unit to be repaired at our expense and to your satisfaction.

Regardless of your needs, our professional telephone technicians are available to assist you Monday through Friday from 8:00 a.m. to 6:00 p.m. Eastern Time. Please contact us by telephone or fax. If you wish to write, our mailing address is:

Thermo Fisher Scientific (Asheville) LLC
401 Millcreek Road, Box 649
Marietta, OH 45750

International customers, please contact your local Thermo Scientific distributor.

Table of Contents

Section 1 Introduction 1-1
Specifications 1-2

Section 2 Unpacking 2-1
LED Indicators 3-1
Temp/Vacuum Display 3-1
Day/Time Display 3-1

Section 3 Controls, Indicators and Connectors 3-1
Connectors and Valves 3-2
Keypad 3-2
Self-Diagnostic Safety Monitors 3-4

Section 4 Installation and Assembly 4-1
Site Requirements 4-1

Section 5 Operation 5-1
Establishing Operating Conditions 5-5
Setting the Temperature 5-6
Operation in a Vacuum Environment 5-7
Operation in a Controlled Environment 5-7
Operation in a Static Environment 5-7
Setting the Time and Day 5-8
Temperature/Pressure Outputs 5-8

Section 6 Programming the Oven 6-1
Program Execution Enabling/Disabling 6-2
Sample Program 6-2

Section 7 Calibration Procedures 7-1
Calibration Mode 7-1
INIT - Initialize Memory 7-2
VCMC - Vacuum Calibration 7-3
TCCB - Thermocouple Calibration 7-3
VCMC - Vacuum Calibration (cont.) 7-4
VCMC - Vacuum Calibration (cont.) 7-5
CJCD-Cold Junction Compensation Display 7-6
D/AC - Temp/Vacuum Recorder Outputs 7-6
Seal Replacement 8-1

Section 8 Maintenance 8-1
Door Alignment Procedure 8-2

Section 9 Service 9-1

Section 10 Replacement Parts 10-1
Ordering Procedures 10-2

Section 1 Introduction

The Thermo Scientific Programmable Vacuum Oven is designed to operate with reduced pressures and/or with inert atmospheres. As such, it is equipped with separate vacuum and gas ports - each with its own control valve. Additionally, a special digital readout display indicates time of day, chamber temperature, pressure and schedules for programmed oven operation.

Temperature settings and vacuum pump operation can be controlled at the touch of a button. A 7-day programmable timer provides automatic temperature/vacuum control in real-time programmable steps. The dual displays provide constant day/time, and temperature/pressure updates every 5 seconds. Chamber temperature and pressure can be externally recorded by connecting to the recorder outputs located on the back of the control board. PURGE and VACUUM valves, conveniently located under the control panel, provide access for a vacuum pump and/or the presence of inert gases into the chamber.

The Vacuum Oven design features a 1.5 cubic-foot stainless steel chamber with fully adjustable shelves. An additional feature is a chamber door with full view, and tempered safety glass.

The stainless steel chamber permits performance of practically every laboratory need associated with general drying, curing, conditioning, desiccating, annealing, and moisture tests. Additional applications include vacuum embedding, out-gassing solids and liquids, aging tests, plating, and electronic process control.

Five built-in, self diagnostic features – open thermocouple, over-temperature, power failure, low battery, and calibration data corruption - on the front panel display to alert the operator of a malfunction and thus prevent damage to both samples and equipment.

Warning This unit is not explosion proof. Do not use in the presence of flammable or combustible materials; fire or explosion may result. Unit contains components that may ignite such materials. Do not place volatile items in the chamber. Fumes and spillage from acidic solutions cause corrosion of the stainless steel chamber and the door gasket. Care should be taken to maintain neutral pH at all times. ▲

Specifications

Performance Characteristics

Temperature Display Range . . .Ambient to 280°C w/ 1°C resolution

Temperature Control Range . . . . . .50 to 280°C w/ 1°C resolution.

Heat Rise time . . . .Ambient to 100°C in <30 minutes, w/ temp set to 200°C

Temperature Set-Point Accuracy . . . . .±2°C from 50 to 280°C

Temperature Set-Point Reproducibility . .±0.1°C

Temperature Stability . . . . . .±0.3°C

Temperature Display . . . . . .4 digit alphanumeric

Average Temperature Uniformity . . . ±5°C at 25" Hg below atmosphere, ≥5" Hg vacuum on the oven's display, based upon measuring points at the geometric center and each corner of oven chamber at 100°C in compliance with DIN 12880 2007-05

Vacuum Specifications

Vacuum Pump Down Time . . To 1.0 in. Hg in 6 mins using 12 LPM vacuum pump

Average Leak Rate . . . . . .<1 in. Hg per 24 hours

Vacuum Display Range . . 0.0 in. Hg to one atmosphere (in. Hg)

Vacuum Display Accuracy . .Average error 0.2 in. Hg after calibration

Atmosphere Control . . Use with non-corrosive, non-flammable gases such as nitrogen and CO_2

Power Requirements

Catalog No. 3628A . . . .115V ±10%, 14.7 Amps, 50/60 Hz

Catalog No. 3628A-1 . . 230V ±10%, 7.4 Amps, 50/60 Hz

Power Consumption . . . . . .1700 watts

Vacuum Pump Contacts (Tabs 3 and 4) . . .15A@ 240VAC, Max

Environmental

Operating Temperature . . . . . .60° to 100°F

Storage Temperature . . . . . .32° to 120°F

Recorder Outputs

Temperature, Pins P3-1, P3-2 . . . . . .10 mv/°C

Chamber Pressure, Pins P3-3, P3-4 . . . 100 mv/in. Hg

Connector Type: AMP 640456-4

Physical Characteristics

External Dimensions . . . . .26″W x 23″D x 22″H

Chamber Size . . . . . .12″W x 18″D x 12″H

Chamber Volume . . . . . .1.5 cu. ft.

Section 2 Unpacking

Refer to the packing list below and be certain that all listed items are present. Inspect to ensure that the unit has not been damaged during shipment. If the unit appears to have sustained shipping damage, contact the distributor from whom you purchased this product or Technical Services.

Quantity	Description
1	Vacuum Oven
2	Shelves (shipped in chamber)
2	Hose Connectors
1	Operating Manual

If any of these items are missing from the carton, contact Technical Services.

Before operating the vacuum oven, the user should ensure that all packing material has been removed from the interior of the chamber.

Section 3 Controls, Indicators and Connectors

Before putting the Vacuum Oven into operation, the user should become thoroughly familiar with the location and function of all controls, indicators, and connectors. Most are clearly labeled and located on or below the front panel, with the exception of the two (PURGE and VACUUM) hose connectors, which are located on the lower, right side of the oven. A set of vacuum pump auxiliary contacts and the temperature/ vacuum recorder output connectors are located on the rear side of the control board. See following pages in this section for instructions on accessing these connectors. The control panel consists of two 14-segment alphanumeric displays, six indicator LEDs, four keypads, and an ON/OFF toggle. The VACUUM and PURGE valves are located just beneath the control panel.

Day/Time Display

A four character alphanumeric readout that alternately displays the day of the week and time of day in 5-second intervals.

Temp/Vacuum Display

A four character alphanumeric readout that alternately displays the temperature (°C) and chamber pressure (in. Hg) in 5-second intervals.

LED Indicators

AM: Indicates first 12 hrs. of a day is being displayed/programmed in the upper display window. Flashes when in Calibration mode.

°C: Indicates chamber temperature (°C) is being displayed/programmed in the lower display window.

in. of Hg: Indicates chamber pressure is being displayed in the lower display window. Also illuminated during vacuum pump program step.

Heater: Indicates heater activation.

Pump: Indicates closed vacuum pump contact condition.

Program: Indicates 7-day program setup or operation.

Keypad

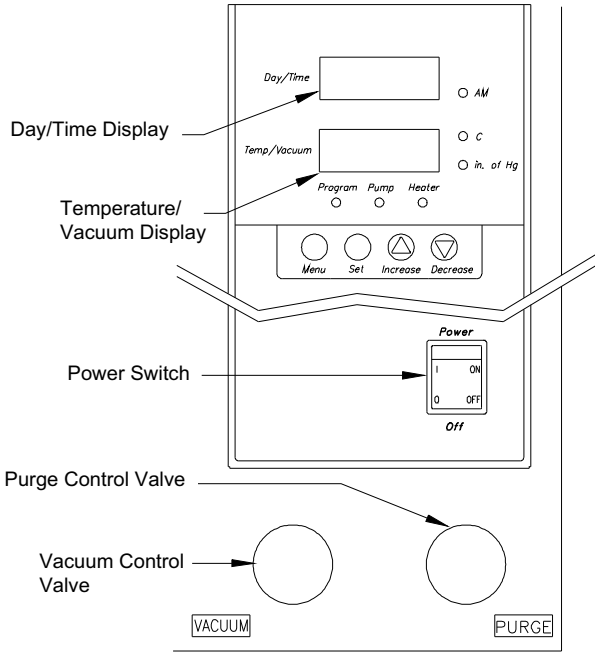

Figure 3-1. Control Panel

Menu: Allows operator to cycle through main menu and calibration menu.

Set: Selects one of six main menu parameters and one of five calibration menu parameters.

Increase: Increments values to be selected for each parameter.

Decrease: Decrements values to be selected for each parameter.

Connectors and Valves

Power Switch: A rocker type switch that controls power to Vacuum Oven.

Vacuum Control Valve: A forged body, shut-off valve used to open and close the connection to an auxiliary vacuum pump. Valve port accepts a supplied serrated fitting to ease in connecting a 1/4-inch (inside diameter) hose.

Purge Control Valve: A forged body, shut-off valve used to open and close the connection to an auxiliary gas source. Valve port accepts a supplied serrated fitting for ease in connecting a 1/4-inch (inside diameter) hose.

Vacuum Inlet Port: A serrated hose fitting used to connect an auxiliary vacuum pump to the oven. Fitting accepts a 1/4-inch (inside diameter) hose.

Connectors and Valves (continued)

Purge Inlet Port: A serrated hose fitting used to connect an auxiliary gas source to the vacuum oven. Fitting accepts a 1/4-inch (inside diameter) hose.

Vacuum Port Auxiliary Contacts: Normally open contacts located at the bottom of the rear side of the control board (Tabs 3 and 4). The contacts close when either the pump is manually activated at the keypad, or by running a program step that calls for pump activation.

Temperature and Vacuum Recorder Outputs: Four pins located on the top, right of the rear side of the control board (P3) which provide a voltage readout corresponding to chamber temperature and/or pressure.

Calibration Jumper Pin (JP4): Group of four pins located in the center of the rear of the control board. The lower two pins when jumped enable calibration mode. See Figure 2 for controller rear view.

Warning Secured access panels, covers, etc., should only be removed from this equipment by trained service personnel. Hazardous voltages are present at various internally exposed points. ▲

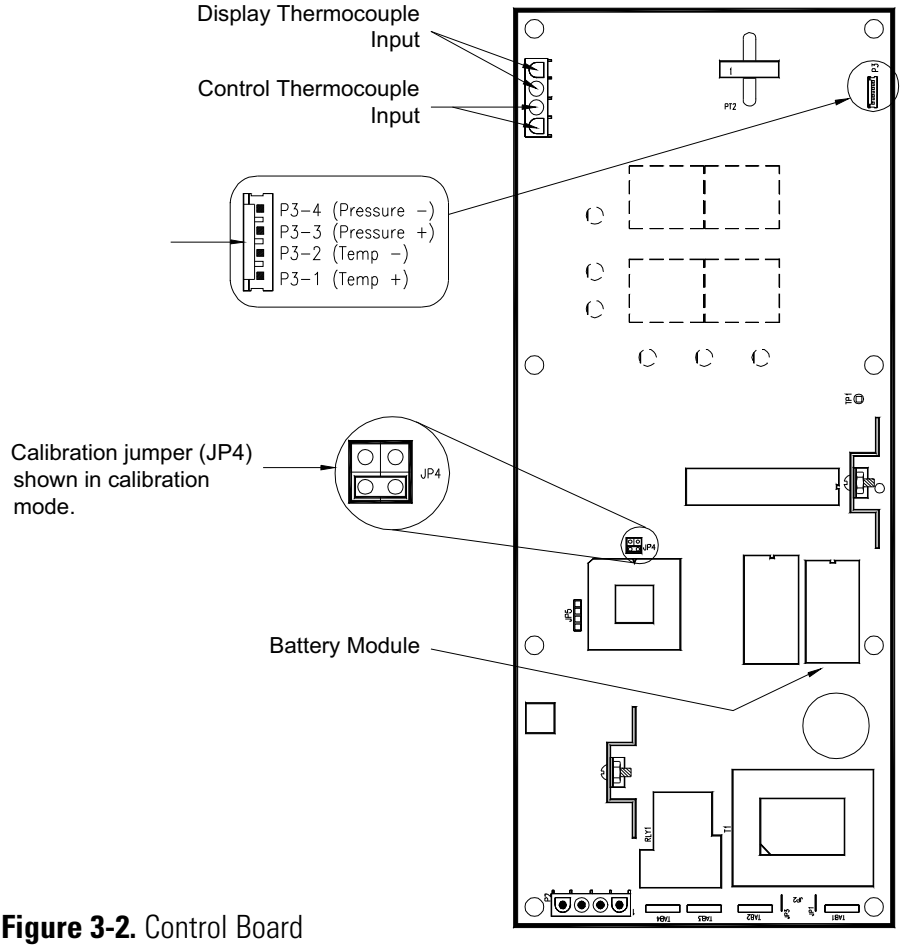

Figure 3-2. Control Board

Self-Diagnostic Safety Monitors

A group of five messages alert the operator to heater and control malfunctions. The OTC (open thermocouple) and OVR (over temperature) errors alternately display in the TEMP/VACUUM display. The PWRF (power failure), BATT LOW (low battery) and CRC (calibration data corruption) are displayed in the DAY/TIME display window. All messages and their meanings are as follows:

OTC (Open Thermocouple)

The TEMP/VACUUM display alternates between OTC and current chamber pressure at 5 second intervals, where OTC replaces the normal process temperature display field. The heaters and vacuum pump (if connected to auxiliary contacts) are forced OFF. Program execution stops.

OVR (Over Temperature)

Activates if oven temperature exceeds the set point +25°C.

PWRF (Power Failure)

Power failure only detected during program mode. The failure must be longer than 2 minutes. Time display alternates between PWRF, HH:MM and DAY(n) at 5 second intervals.

BATT LOW (Low Battery)

Indicates it is time to replace the 6-year battery module. Module is in a socket on the back of the control board. See Fig. 2.

CRC (Calibration Data Corrupted)

Indicates an error in the stored calibration data. The heater and pump relay are forced off. Unit must be calibrated to clear.

Run Away Heater Safety

In the event that the heater triac or control malfunctions and results in a run away heater, a secondary thermostat is in place that will automatically pick up control of the heaters at approximately 325°C. If the set point is above 270°C and the display is indicating a chamber temperature of 325°C (±12°C), this will be an indication that the secondary thermostat has taken over control of the oven. If the set point is at 270°C or below, the temperature display will show OVR at every other temperature display update. In either case, Technical Services should be contacted to check the heater circuit.

Section 4 Installation and Assembly

The Vacuum Oven is shipped assembled and ready for operation. However, before installing the oven, the operating site should be prepared to meet necessary requirements by following the guidelines below.

Site Requirements

The standard plug configurations are shown in Figure 4-1. The 115VAC model is supplied with a 20 amp plug (NEMA 5-20P). The 230VAC model is supplied with a 15-amp plug (NEMA 6-15P). Verify that the appropriate receptacle is at the location the oven will be used.

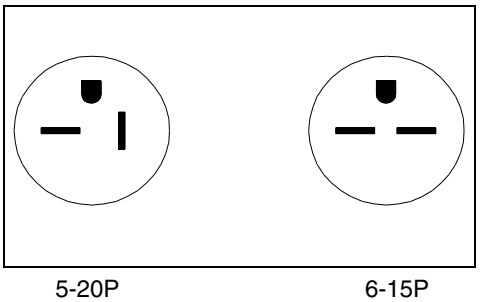

Figure 4-1. Standard Plug Configurations

Warning To avoid the risk of electrical shock, verify that the source plug is properly grounded. ▲

The supporting bench or table must be capable of holding in excess of 200 pounds. The bench should be sufficient to accommodate sample-handling processes. The oven itself is 26-inches wide and 23 inches deep; therefore, the bench surface should be approximately 48 inches wide and 30 inches deep to allow for ventilation clearance at the rear of the oven.

Warning To avoid the risk of fire, provide 6 inches of clearance for the top, back and sides of the oven. Do not set or lean any objects against or on top of the oven while hot. ▲

For installations that may use a tank atmosphere, check that site facilities and tank equipment are in compliance with OSHA requirements for handling compressed gas. Responsible personnel must also be thoroughly knowledgeable in the use, storage, and handling of compressed gases.

When using a tank atmosphere, a 1/4″ tube to 1/4″ pipe adapter is required for the regulator outlet of the tank. This adapter is not supplied. A Swagelok B-400-7-4 adapter, or equivalent, may be used. Also, 9/16″, and 1-1/8″ open-end or, preferably, flare-nut wrenches are required.

Site Requirements (continued)

After verifying all site and safety requirements, the following steps should be completed to prepare the vacuum oven for operation:

1. Verify that all packing items and securing materials have been removed from the oven.

2. Move the oven to the desired location as specified.

3. Locate the two serrated hose fittings, packed in the INSTRUCTIONS envelope accompanying each oven.

4. Install the hose fittings on the VACUUM and PURGE ports located on the lower right side panel. Hose fittings should be installed by turning the fitting nut clockwise until finger-tight then, using a 9/16” wrench, turn the nut an additional 1/4-turn while holding the fitting stationary with a 3/8″ wrench.

5. Close both the PURGE and VACUUM valves by turning the control knob clockwise as far as possible.

6. Connect a vacuum pumping system, including a suitable trap, to the serrated fitting labeled VACUUM. Use 1/4″ I.D. heavy-walled vacuum tubing and secure the connection with a hose clamp.

7. If desired, connect a purge gas supply to the serrated fitting labeled PURGE, using a suitable length of 1/4″ I.D. tubing. Use a two-stage gas flow regulator if gas is to be supplied by a pressurized cylinder.

8. After installing connecting tubing, check that the PURGE CONTROL valve on the unit is closed (full clockwise position), then open the regulator flow control valve to pressurize the line. At this point, check all connections for leaks, using an ordinary soapy water solution.

9. Check data plate and plug line cord into a suitable power receptacle.

Section 5 Operation

Energize the oven by switching the ON/OFF toggle to the ON position. The upper display will show VER while the lower display will show 1.x, where x is the current software version. Next, the DAY/TIME display will begin alternating between the day of week and the time of day. At the same time, the TEMP/VACUUM display will alternate between chamber temperature (°C) and chamber pressure (in. Hg). This is the default display. Press the MENU key to scroll through menus 1-6, then press SET to enter a menu. When there is no keypad activity for 5 seconds, the unit returns to Menu 1 automatically. The following table lists the main menus and their functions. The tables that follow list the subcategories of the main menu and describe the function of each.

Table 5-1. Main Controller Menu

Menu	Prompt	Display Functions	Setup Functions
1	(Default)	Top Display – Day of week, Time of day Bottom Display – Temperature (°C), Pressure (in. Hg)	Adjust temperature control setpoint. Turn vacuum pump contacts ON/OFF
2	ADJT	Display temperature offset value	Adjust temperature control offset
3	ADJP	Displays pressure offset value	Adjust for barometric pressure variations
4	TSET	Displays flashing day or time of day	Set clock and day of the week
5	PRGM	Displays program mode	Start/Stop program mode
6	PSET	Displays day, step and set-point	Program 7 – Day event timer

Table 5-2. Default Menu (Menu 1)

Step	Key Entry	Action	Display
1	Press SET	Enter Temperature Set-point mode with the current set point displayed. Use the UP/DOWN keys to adjust the set point. (Range 16 to 280°C).	SP: 280
2	Press SET 2nd Time	The temperature set point is updated and the vacuum pump ON/OFF option is displayed. Use the UP key to change the bottom display to YES and switch the pump on. Use the DOWN arrow key to change the display back to NO and turn the pump contacts OFF.	PUMP OFF
3	Press SET or wait 2 seconds	The pump contacts are set as desired above. Unit returns to the default menu after 2 seconds of inactivity.	Default

Table 5-3. Adjust Temperature Offset (Menu 2 - ADJT)

Step	Key Entry	Action	Display
1	Press MENU until ADJT is displayed, then press SET. Use the UP/DOWN keys to adjust the temperature offset. (Range ±30°C). ADJT value is added to temperature display.	ADJT 02	ADJT 02
2	Press SET or wait 2 seconds	Unit returns to the default menu.	Default

Table 5-4. Adjust Barometric Pressure (Menu 3 - ADJP)

Step	Key Entry	Action	Display
1	Press MENU until ADJP is displayed, then press SET.	Use the UP/ DOWN keys to adjust the pressure offset. (Range ±8.0 inHg) ADJP value is added to pressure display.	ADJP 0.0
2	Press SET or wait 2 seconds	Unit returns to the default menu.	Default

Table 5-5. Set Time and Day (Menu 4 - TSET)

Step	Key Entry	Action	Display
1	Press MENU until TSET is displayed, then press SET	Unit enters set time and day mode and the current hour and minute is displayed. Hours digits are flashing. Use the UP/DOWN keys to adjust the hour (12 HR clock).	08:00 AM •
2	Press SET	Hours are entered and minutes are flashing. Use the UP/ DOWN keys to adjust minutes.	08:00 AM •
3	Press SET	Day of the week is displayed (flashing). Use the UP/DOWN keys to adjust the day of the week.	MON
4	Wait 2 seconds	Unit returns to default menu.	Default

Table 5-6. Program Mode ON/OFF (Menu 5 - PRGM)

Step	Key Entry	Action	Display
1	Press MENU until PRGM is displayed.	Use the Up arrow key to change the bottom display to ON, or the down arrow key to change the display to OFF.	PGRM ON
2	Press SET or wait 2 seconds	If the program menu was set ON, the program will execute. If it was set to OFF, the control returns to default mode.	Default

Table 5-7. Program Edit Mode (Menu 6 - PSET)

Step	Key Entry	Action	Display
1	Press MENU until PSET is displayed, then press SET	Unit enters the program edit mode and points to MONday, step 1. Use the UP/DOWN keys to select the day and step that your program will begin on.	MON1
2	Press UP or DOWN, then press SET.	Unit displays the program start time for the current step. Hour digits are flashing. Use the UP/DOWN keys to adjust the hour the current step will begin on.	08:00 AM •
3	Press SET	Minutes digits are flashing. Use the UP/DOWN keys to adjust minutes the current step will begin on.	08:00 AM •
4	Press SET	Step time and temperature setpoint is displayed, °C LED is lit. Use the UP/DOWN keys to adjust set-point for the current step.	08:00 280
5	Press SET	Program step time and pump status is displayed, inHg LED is lit. Use the UP/DOWN keys to switch pump ON or OFF for the current step.	08:00 OFF
6	Press SET	The program day and current step are shown in the top display while the bottom display shows 'N ?'. Use the UP/DOWN keys to adjust prompt to Y to accept or N not accept the current program step as is.	08:00 N ?
7	Press SET, then MENU to exit or SET again to continue	Unit displays the next program step. To exit the edit session press MENU, or press SET to view or edit another step.	MON2
8	Press MENU to exit	Unit displays COPY/NO. This option will copy 8 steps forward to each day through the end of the week . Use the UP/DOWN keys to adjust prompt to Y (copy) or N (not copy).	NO

Continue programming the steps as necessary to complete a desired temperature profile. Keep in mind, the heat rate cannot be adjusted, and the time to reach a certain temperature should be noted before programming. A two hour time span is usually adequate for the oven to reach most temperatures.

Establishing Operating Conditions

Establishing the operating conditions consists of setting the desired temperature program and establishing the desired environmental conditions, e.g., vacuum, inert gas atmosphere, or both. Instructions pertaining to connecting a vacuum pump and/or gas supply to the oven are given under the Installation and Assembly section of this manual. Before establishing conditions, be certain that all steps given under the aforementioned section have been completed.

The following procedure describes the proper method of operating a vacuum pump using the auxiliary contacts supplied on the control board (Tabs 3 and 4).

1. Remove power cord from the supply outlet.
2. To access the auxiliary contacts, remove six screws holding the right side panel in place.

Warning High voltages are present when the side panel is removed. Only trained personnel should conduct this procedure. ▲

3. Pull the back edge of the side panel away from the oven and slide the front edge out the front panel slot.
4. Remove the hole-plug located just to the right of the VACUUM port. The keyed hole is properly sized to support a UL/CSA type SR 7W-2 strain relief bushing to be used with 18/2, 18/3, 16/2, 16/3 type S or ST cable. Verify the cable is long enough to reach the pump contacts and then fasten the cable in the keyed hole with a strain relief bushing.

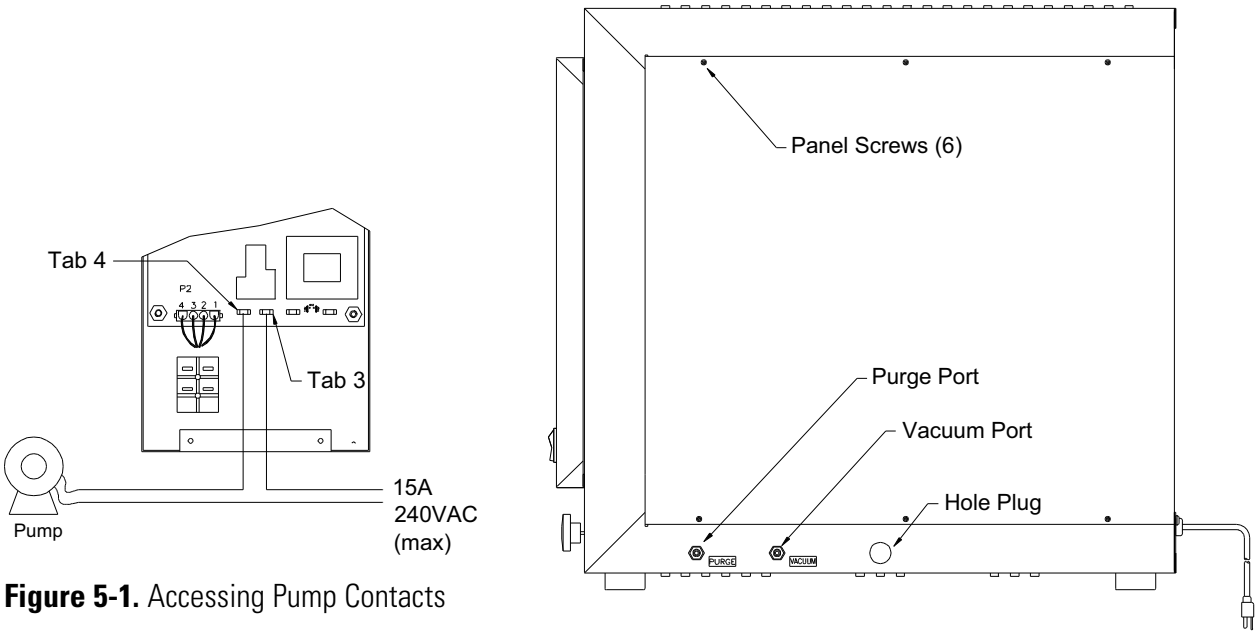

Figure 5-1. Accessing Pump Contacts

Establish Operating Conditions (cont.)

5. Crimp two 1/4″ push-on terminals to the two wires going to tabs 3 and 4.
6. The pump circuit should be connected as shown in Figure 5-1.
7. Once the wires are connected securely to the pump contacts, reattach the side panel using the six side panel screws.

Note Vacuum pump operation can be performed independently as well. ▲

8. Connect the vacuum hose to the Vacuum Inlet Port on the side of the oven and open the Vacuum valve. Close the door and the Purge Inlet Port by turning Purge valve clockwise completely.
9. Plug the oven in and switch the ON/OFF toggle to the ON position. The top and bottom displays will alternately flash between time of day/day of the week and chamber temperature/pressure, respectively.
10. Press the SET key until PUMP is displayed in the upper display window. Press the UP ARROW key. The lower display window should show ON. Press the SET key again or leave as is for two seconds. The contacts will close and the pump should turn on (providing all other switches to the pump are on). Control will then revert to the default mode after five seconds.
11. While the pump evacuates the chamber, the chamber pressure should begin to drop as indicated by the lower display. The bottom display alternately shows chamber pressure (in. Hg) and chamber temperature (°C).
12. To turn off the pump, press the SET key until PUMP is displayed in the upper display window. Press the DOWN ARROW key. OFF should then be displayed in the lower display window. Press SET or leave as is for two seconds. The auxiliary pump contacts will open and the pump should turn off.

Note As noted, the vacuum pump can be controlled as described or manually using an external switch. ▲

Setting the Temperature

To set the oven temperature, begin by pressing the SET key. The upper display will show SP while the lower display indicates the last set temperature or OFF, indicating the heaters are turned off. Next use the UP/DOWN arrow keys to toggle through temperature values. When the desired temperature is displayed, press the SET key to enter the value. Return to the default mode by continuously pressing MENU or leave as is for two seconds and control will revert to the default mode automatically.

Setting the Temperature (cont.)

Note If fast warm up is desired, the temperature can be set at approximately 25°C higher than the final temperature, then set back to the final temperature when the oven is within 10°C of the set point.

Operation in a Static Environment

Static environment is defined as operation at atmospheric pressure and with air, as it is present. In this case, the operator would simply place the sample in the oven chamber and set the desired temperature.

Operation in a Controlled Environment

Controlled environment is defined as operation with the samples in an inert gas. To accomplish this, perform the following:

1. Place samples in the oven chamber then close and lock the chamber door.
2. Close the PURGE CONTROL valve (full clockwise rotation).
3. Open the VACUUM CONTROL valve (full counterclockwise rotation) and turn on the vacuum pumping system.
4. Close the VACUUM CONTROL valve and open the PURGE CONTROL valve slowly to bleed in an inert gas.
5. Close the PURGE CONTROL valve, then set the desired temperature.

Operation in a Vacuum Environment

To operate the oven in a vacuum environment, perform the following:

1. Place samples in the oven then close and lock the oven door. Verify that gasket seal has been coated with high temperature vacuum grease.

Caution Do not use silicone vacuum grease. It will damage the door seal and has restrictions for some types of materials placed in the oven. ▲

2. Connect the vacuum hose to the vacuum port being sure the connection is sealed.
3. Make sure the purge valve is closed (full CW) and the vacuum valve is open (full CCW).
4. Activate the vacuum pumping system.
5. The vacuum, in inches-of-mercury, can be read on the TEMP/ VACUUM Display. A steady decrease in chamber pressure ensures the door is sealed.

Temperature/Pressure Outputs

When the oven reaches a stable operating condition, the display temperature should indicate the actual center chamber temperature (±2.0°C). In the event the displayed temperature is not in agreement with the actual chamber temperature, the offset parameter, located in the MAIN MENU, can compensate for the display error. To enter an offset value, press the MENU key until the upper display window shows ADJT (adjust temperature) then press UP/DOWN arrow keys to enter an offset for the display temperature. Press the Set key or wait 2 seconds and the offset value will update the temperature display.

Example: The oven temperature is set for 200°C. After it has reached a stable state (usually 2 1/2 hours for 200°C) the display indicates the oven temperature is 202°C while a reference thermometer sensor placed in the center of the oven chamber shows a temperature of 200°C. Changing the adjust temperature value (ADJT) from 0 to -2 will decrease the temperature display by 2°C and bring the display in agreement with the actual oven temperature.

Note Adjusting the temperature offset (ADJT) only changes the display temperature. It does not alter the controlled temperature. ▲

The vacuum display can be adjusted in the same way. In the event the displayed chamber pressure is not accurate, press the MENU key until the upper display window shows ADJP (adjust pressure). Use the UP/DOWN keys to enter the desired offset. Press the Set key or wait 2 seconds for the display to update.

Setting the Time and Day

To set the time and day press the MENU key until the upper display shows TSET (time set). Press the SET key and use the UP/DOWN arrow keys to adjust the hour of the day. When the current hour is displayed enter it by pressing the SET key again. Use the UP/DOWN arrow keys to adjust the minutes. When the correct minutes are displayed, press the SET key. Finally, days of the week can also be adjusted by pressing the UP/DOWN arrow keys. Press the SET key again to enter the day of the week. For additional information on the menus, see Tables 5-1 through 5-8.

Section 6 Programming the Oven

The oven controller is capable of handling 8 instructions per day, 7 days a week. The PSET table under OPERATION can be used in conjunction with the following description to aide in programming the control to suite a particular application.

To enter the Program Edit Mode, press the MENU key until the upper display shows PSET. The upper display will then show MON1, indicating it is ready to program Step #1 which will begin on the next Monday encountered by the controller's real-time clock. Use the UP/DOWN arrow keys to progress through the programming steps on Monday or whatever day the program should begin on. When the desired step is reached, press SET. Use the UP/DOWN arrow keys to adjust the starting hour the current program step should begin execution on, press SET to select the desired hour. Repeat for minutes, desired temperature and vacuum pump activation. The next prompt (N ?) asks the user to copy the current step to the remaining steps in the day, in other words, if you want to control at the same temperature and keep the pump contacts in the same state for the remainder of the day, use the UP arrow key to select Y (yes) then press the SET key or no key for two seconds. The remaining step(s) in that day will be programmed the same. Note that the "N ?" prompt will not appear if the current program step was not changed. Leaving the "N ?" as is and pressing the SET key or no key after 2 seconds, will bring up the next program step for that day (MON2 if the previous step was MON1), at that point, additional step(s) can be programmed. Repeat this procedure for entering new steps. When all steps on a given day are programmed, press the MENU key. The control will prompt the user to copy that day's program for the remainder of the week. The upper display will show COPY, while the lower display shows NO. To copy that day's program through the rest of the week (or part of the week), use the UP arrow key to change the NO to YES. Press the SET key and the previous day's program is copied to the end of the week. If the following day should be programmed differently, simply use the UP/DOWN arrow key to advance the menu to the next day and continue programming.

Note The program week begins on Monday and ends on Sunday. That means whatever is programmed on Monday can be copied through to Sunday. ▲

Sample Program

The operator wishes to run the oven up to 100°C with an evacuated chamber for 3 hours. It will take the oven approximately 1 hour to attain the set temperature and 10 minutes to evacuate the chamber. The program should start on Monday morning at 8AM.

After the 3 hours is up, the oven should shut down until Tuesday, 5AM when the user wants the oven to heat to 200°C, which will take approximately 2 hours to attain, then hold at 200°C for 4 hours. It should remain at atmospheric pressure (no automatic pump activation) throughout the day (Tuesday). The oven should continue the profile it ran on Tuesday through Friday, then shut down for Saturday and Sunday.

Table 9 graphically shows what the program array would look like. The default settings for any step are: TEMP- OFF, PUMP- OFF, and TIME- 12:00 AM. The outlined areas on Table 9 indicate actual program editing. Notice the final step programmed for each day is copied through to the end of that day. This was accomplished by selecting Y (yes) at the '?' menu. Also, the program steps edited for Tuesday were copied through to Friday. Since oven operation should stop on Saturday, Steps 1 and 2 on Saturday are programmed to shut the heaters down. The program execution can be terminated at any time by following the procedure for Disabling program execution given below.

Program Execution Enabling/Disabling

To **execute** a program, press the MENU key until the upper display shows PGRM. Press the UP key to display ON, then press SET or wait 2 seconds and control will return to the default mode automatically. The program will then search for the current day and begin execution at the step with the most recent start time.

To **stop** program execution, press the MENU key until the upper display again shows PRGM. Press the DOWN arrow key to display OFF, then press SET or wait 2 seconds for the program to stop automatically, with the temperature set to the last value encountered during the program execution.

Table 6-1. Sample Program Array

Steps	Monday	Tuesday	Wednesday	Thursday	Friday	Saturday	Sunday
1	Temp: 100° C Pump: ON Time: 8:00 AM	Temp: 200° C Pump: OFF Time: 5:00 AM	Temp: 100° C Pump: OFF Time: 5:00 AM	Temp: 100° C Pump: OFF Time: 5:00 AM	Temp: 100° C Pump: OFF Time: 5:00 AM	Temp: OFF Pump: OFF Time: 12:00 AM	Temp: OFF Pump: OFF Time: 12:00 AM
2	Temp: 100° C Pump: OFF Time: 8:10 AM	Temp: OFF Pump: OFF Time: 11:00 AM	Temp: OFF Pump: OFF Time: 11:00 AM	Temp: OFF Pump: OFF Time: 11:00 AM	Temp: OFF Pump: OFF Time: 11:00 AM	Temp: OFF Pump: OFF Time: 12:00 AM	Temp: OFF Pump: OFF Time: 12:00 AM
3	Temp: OFF Pump: OFF Time: 12:00 PM	Temp: OFF Pump: OFF Time: 11:00 AM	Temp: OFF Pump: OFF Time: 11:00 AM	Temp: OFF Pump: OFF Time: 11:00 AM	Temp: OFF Pump: OFF Time: 11:00 AM	Temp: OFF Pump: OFF Time: 12:00 AM	Temp: OFF Pump: OFF Time: 12:00 AM
4	Temp: OFF Pump: OFF Time: 12:00 PM	Temp: OFF Pump: OFF Time: 11:00 AM	Temp: OFF Pump: OFF Time: 11:00 AM	Temp: OFF Pump: OFF Time: 11:00 AM	Temp: OFF Pump: OFF Time: 11:00 AM	Temp: OFF Pump: OFF Time: 12:00 AM	Temp: OFF Pump: OFF Time: 12:00 AM
5	Temp: OFF Pump: OFF Time: 12:00 PM	Temp: OFF Pump: OFF Time: 11:00 AM	Temp: OFF Pump: OFF Time: 11:00 AM	Temp: OFF Pump: OFF Time: 11:00 AM	Temp: OFF Pump: OFF Time: 11:00 AM	Temp: OFF Pump: OFF Time: 12:00 AM	Temp: OFF Pump: OFF Time: 12:00 AM
6	Temp: OFF Pump: OFF Time: 12:00 PM	Temp: OFF Pump: OFF Time: 11:00 AM	Temp: OFF Pump: OFF Time: 11:00 AM	Temp: OFF Pump: OFF Time: 11:00 AM	Temp: OFF Pump: OFF Time: 11:00 AM	Temp: OFF Pump: OFF Time: 12:00 AM	Temp: OFF Pump: OFF Time: 12:00 AM
7	Temp: OFF Pump: OFF Time: 12:00 PM	Temp: OFF Pump: OFF Time: 11:00 AM	Temp: OFF Pump: OFF Time: 11:00 AM	Temp: OFF Pump: OFF Time: 11:00 AM	Temp: OFF Pump: OFF Time: 11:00 AM	Temp: OFF Pump: OFF Time: 12:00 AM	Temp: OFF Pump: OFF Time: 12:00 AM
8	Temp: OFF Pump: OFF Time: 12:00 PM	Temp: OFF Pump: OFF Time: 11:00 AM	Temp: OFF Pump: OFF Time: 11:00 AM	Temp: OFF Pump: OFF Time: 11:00 AM	Temp: OFF Pump: OFF Time: 11:00 AM	Temp: OFF Pump: OFF Time: 12:00 AM	Temp: OFF Pump: OFF Time: 12:00 AM

Section 7 Calibration Procedures

The Vacuum Oven is carefully calibrated before leaving the factory. However, re-calibration may become necessary if the controller or thermocouples are ever replaced. It may be necessary to re-calibrate the chamber pressure display if critical vacuum levels are required to meet particular applications due primarily to altitude and atmospheric conditions.

Warning High voltages are present when the side panel is removed. Only trained personnel should conduct this procedure. ▲

Calibration Mode

Follow the instructions below to access the calibration mode:

1. Unplug the power cord from the supply.
2. Remove the right side panel (6 screws) from the Vacuum Oven.
3. Locate two sets of jumpers on the back of the control board labeled JP4. To enter the calibration mode, remove the bottom jumper and place it across the bottom pins as shown in Figure 7-1.

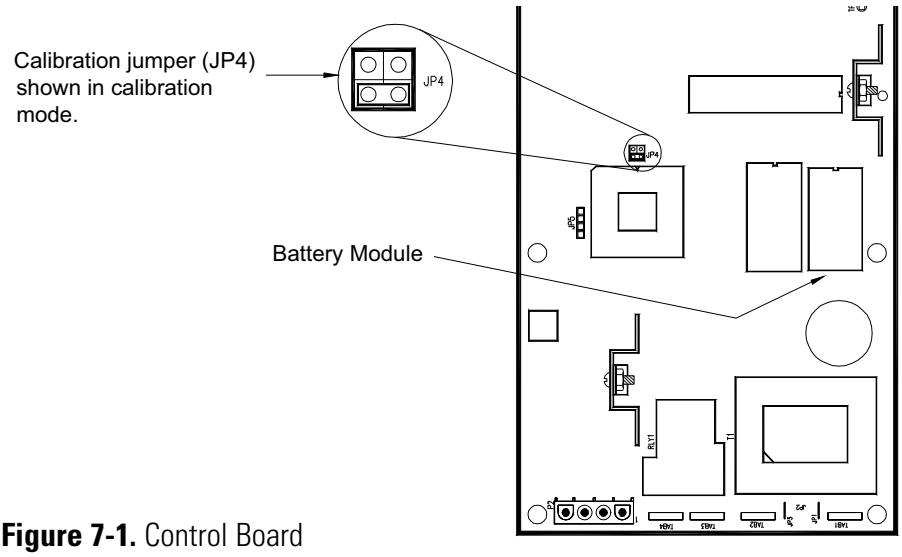

Figure 7-1. Control Board

4. Plug the power cord in and switch on the power switch. The upper display will show INIT, which is the first calibration menu. By pressing the MENU key repeatedly, all calibration menus can be viewed in the upper display. Table 5-7 summarizes the calibration menus.

Calibration Mode (continued)

5. To abort a calibration and return to the control mode, unplug the power cord and remove the jumper from across JP4. If the calibration didn't proceed completely, the original calibration data will not be affected.

Note Any part of the calibration can be conducted individually without altering data from the others. ▲

Table 7-1. Calibration Menus

Prompt	Calibration Routine	Comments
INIT	Initialize data memory.	Four options. Selectively clears data variables, program and clock. Resets all calibration data to defaults.
TCCB	Measure and Control thermocouple calibration.	Attempts to control @ 50 and 200°C. When the oven is stable, match the display with a reference temperature from inside the unit.
VCMC	Pressure sensor.	Requires two pressures, ambient plus second point near 0 in Hg.
D/AC	Temperature and vacuum recorder outputs	Adjust full scale. Temperature, vacuum inputs not required.
CJCD	Cold junction compensation temperature	Display for verification only. No adjustment

INIT - Initialize Memory

The INIT menu allows the operator to selectively clear data stored for program, calibration and/or clock functions. To select one of the functions, simply press the SET key when the upper display shows the INIT menu. Next, use the UP/Down arrow keys to select which data to clear. The choices are as follows:

VAR - Miscellaneous Variables

PRG - Program Data

TIM - Time Data

CBR - Calibration Data

Finally, with the desired data type displayed in the lower display, press the SET key again to reset the data to the factory set values. The lower display will show CLR indicating the data has been cleared.

TCCB - Thermocouple Calibration

Before beginning the temperature calibration, place a NIST calibrated thermometer in the center of the vacuum oven chamber and close the door. With the calibration jumper in place, press the MENU key until the upper display shows TCCB, then press the SET key. The unit enters the thermocouple calibration mode and displays the first temperature set-point (50°C). The control will attempt to control at 50°C. Allow the unit ample time to reach 50°C. From ambient, a 50°C calibration point will take approximately 2 hours to fully stabilize. When the chamber temperature has completely stabilized, record the temperature of the thermometer in the chamber center. Using that value as the reference, use the UP/DOWN keys to match the oven display temperature to the reference temperature. Press the SET key. The controller will WAIT then SAMPLE values. When finished, it will automatically begin controlling to 200°C. Allow an additional 2 hours for the oven to stabilize at 200°C. Use the UP/DOWN arrow keys to adjust the display to match the reference temperature. Press SET. The controller will WAIT then SAMPLE the data. When the calibration is finished, the display will show DONE CAL. It will then advance to the next calibration menu (VCMC).

VCMC - Vacuum Calibration

Before calibrating the vacuum readout system, it is necessary that the barometric or atmospheric pressure be known. One way of doing this is to contact the U.S. Weather Bureau in the installation area. The bureau will provide the barometric pressure corrected to sea level, this pressure must then be corrected to the altitude where the calibration will be performed. This can be done by interpolating the data from Table 11. Once a pressure for the calibration altitude is obtained, the value is subtracted from the sea level value on Table 11 to obtain the correction factor. The correction factor will then be subtracted from the value obtained from the bureau. Obviously, the corrected value obtained will be only as accurate as the accuracy to which the exact elevation is known.

Example: The barometric pressure corrected to sea level, as reported by the U.S. Weather Bureau on June 13, 1983, was 30.19 in. of Hg, in Pittsburgh, PA. The elevation at the calibration site, also in Pittsburgh, is 850 ft. above sea level. Interpolating the data from Table 11 the pressure at 850 ft. is 29.02 in. of Hg; subtracting this value from 29.92 (sea level pressure) gives a correction factor of 0.9. The actual pressure at the calibration site is: 30.19 - 0.9 = 29.29 in of Hg. Another method is to read the pressure directly from a temperature compensated barometer that can be adjusted for altitude. This method will give the pressure at the elevation of the calibration site without the need for any additional calculations or corrections. Generally, the pressure value measured should fall within the 29 to 30 inches-of-mercury range. In fact, measurements outside this range should be suspect.

VCMC - Vacuum Calibration (cont.)

Table 7-2. Pressure at Atmosphere (Source U.S. Standard Atmosphere, P. 62 [NASA])

Altitude (ft.)	Inches of Hg	Torr (mm of Hg)	PSI
-1000	31.02	787.87	15.25
-500	30.47	773.83	14.94
Sea Level (0)	29.92	760.00	14.70
500	29.38	746.37	14.43
1000	28.86	732.93	14.18
1500	28.33	719.70	13.90
2000	27.82	706.66	13.67
2500	27.31	693.81	13.41
3000	26.81	681.15	13.19
3500	26.32	668.69	12.92
4000	25.84	656.40	12.70
4500	25.36	644.30	12.45
5000	24.89	632.38	12.23
5500	24.43	620.65	12.00
6000	23.98	609.09	11.77
6500	23.53	597.70	11.56
7000	23.09	586.49	11.34
7500	22.65	575.45	11.12
8000	22.23	564.58	10.90
8500	21.81	553.88	10.70
9000	21.38	543.34	10.50
9500	20.98	532.97	10.30
10000	20.58	522.75	10.10

Slight variations will exist usually because of pressure variations due to weather conditions. Therefore, the most accurate way to calibrate the vacuum readout system is to first obtain the atmospheric pressure using one of the methods described above.

Note The procedure below for calibrating the vacuum display assumes the vacuum pump is being controlled by the Auxiliary Contacts, Tabs 3 & 4. The vacuum display can be calibrated with manual pump operation, as well. ▲

To calibrate the vacuum display, perform the following:

1. While in the VCMC calibration mode, open the vacuum (full-CCW) valve to expose the chamber to atmospheric pressure.

2. Connect a suitable vacuum pump to the PURGE port along with a vacuum gauge (Figure 7-2).

3. Press the SET key to enable vacuum calibration. The upper display will show PRSR with the AM LED flashing. The lower display will indicate 29.0 in. Hg.

VCMC - Vacuum Calibration (cont.)

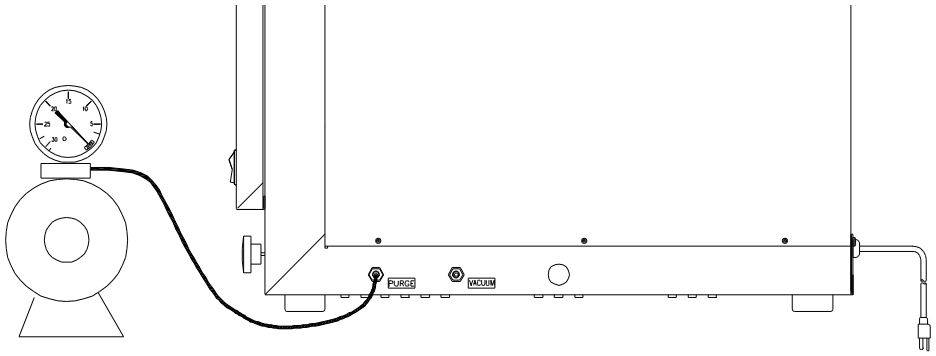

Figure 7-2. Vacuum Pump Hookup

4. Use the UP/DOWN arrow keys to set the displayed pressure to match the atmospheric pressure.

5. Press the SET key again to enter the value. The controller will sample the pressure and adjust the display to it.

Note The controller will sample the vacuum data, then automatically close the auxiliary vacuum pump contacts for the second-point calibration. ▲

6. Rotate the PURGE valve about two turns counterclockwise from the closed position

7. Rotate the VACUUM valve to the full clockwise (closed) position.

8. Allow time to for the pump to evacuate the oven chamber as much as possible (about 10 minutes).

9. After vacuum equilibrates, read the vacuum gauge. Using the UP/DOWN arrow keys, adjust the vacuum display to match the reading on a reference gauge (in. Hg).

10. Press the SET key. The controller will sample the vacuum data, then indicate when it is done.

11. If it is desired, check for chamber leakage by rotating the PURGE valve to the full clockwise position. Leakage should be less than 0.5 inch-of-mercury in one hour.

12. Open the VACUUM valve (rotate counterclockwise) and allow air to bleed into the chamber.

13. Verify the atmospheric pressure is shown in the lower display. Repeat the procedure if necessary by pressing the MENU key until the upper display again reads VCMC.

D/AC - Temp/Vacuum Recorder Outputs

Connector P3 is the Temperature/Pressure Recorder Output interface. Output pins P3-1 and P3-2 provide an output voltage proportional to the chamber temperature, while the pins P3-3 and P3-4 provide a similar voltage proportional to the chamber pressure. To begin calibrating the Recorder Outputs, press the menu key until the upper display shows D/AC, then press the SET key. The lower display will show CAL and then enter the temperature D/A calibration (D/AT). Connect a voltmeter across output pins P3-1 (+) and P3-2 (-). The upper display will show a number that corresponds to the temperature output voltage. Use the UP/DOWN arrow keys to adjust the corresponding display value to increase or decrease the temperature output voltage, then press the SET key to enter the new value. The output voltage will be change. Repeat the process until the voltmeter indicates +3.00VDC. Press the MENU key to accept the new calibration data and enter the vacuum pressure recorder calibration, indicated by D/AV in the upper display.

To begin calibrating the vacuum pressure recorder output, move the voltmeter leads to output pins P3-3 (+) and P3-4 (-). The lower display again indicates a number corresponding to the vacuum recorder voltage.

Use the UP/DOWN arrow keys to increase or decrease the vacuum output voltage then press the SET key to enter the new value. The output voltage will be updated. Repeat the process until the vacuum output voltage is +3.00VDC. When complete, press the MENU key to accept the data. The calibration is complete when both displays indicate DONE CAL.

CJCD-Cold Junction Compensation Display

The cold junction calibration is a self-calibrating procedure. To initialize the CJCD process, press the SET key when the upper display shows CJCD. The upper display will then indicate CJC with the lower display showing the cold junction temperature. There is no adjustment to be made, simply press the SET key again to conclude the calibration. The next menu to appear in the upper display is the INIT menu. Remove the jumper at JP4 to return to normal operating mode (see Step #5 under Calibration Mode).

Section 8 Maintenance

The Vacuum Oven is constructed and finished with materials that provide long maintenance-free service. All that is normally required is a routine cleaning of the exterior surfaces, oven shelf, and oven floor. Use a mild detergent for this purpose. Additionally, all external line connections for inert atmospheres should be checked for tightness on a weekly basis. The oven door seal should also be visually checked for deterioration such as cracks or loss of flexibility. A good seal is necessary to ensure proper operation of the instrument.

Warning Secured access panels, covers, etc., should only be removed from this equipment by experienced service personnel. Hazardous line voltages are present at various internally exposed points. Contact Technical Services with any service problems. A separate section is included in this manual for qualified service personnel.

Seal Replacement

To replace the oven seal, remove the old seal and perform the following:

1. Clean the edge of the chamber with Xylene or similar.
2. Apply a thin bead of Dow Corning RTV-736 red silicone rubber adhesive to the edge of the chamber.
3. Install gasket and close door.
4. Keep door closed for a minimum of 16 hours with 1-2 inches of vacuum before using.

Door Alignment Procedure

A good seal around the door is critical, particularly when operating the oven with a vacuum environment. Therefore, the following procedure should be performed carefully. Refer to the illustrations shown below and perform the following.

1. Loosen, but do not remove, the four (two in both the top and bottom hinge) screws securing the door hinges.

2. Loosen the three door bracket screws (located next to the control panel) that hold the bracket to the cabinet.

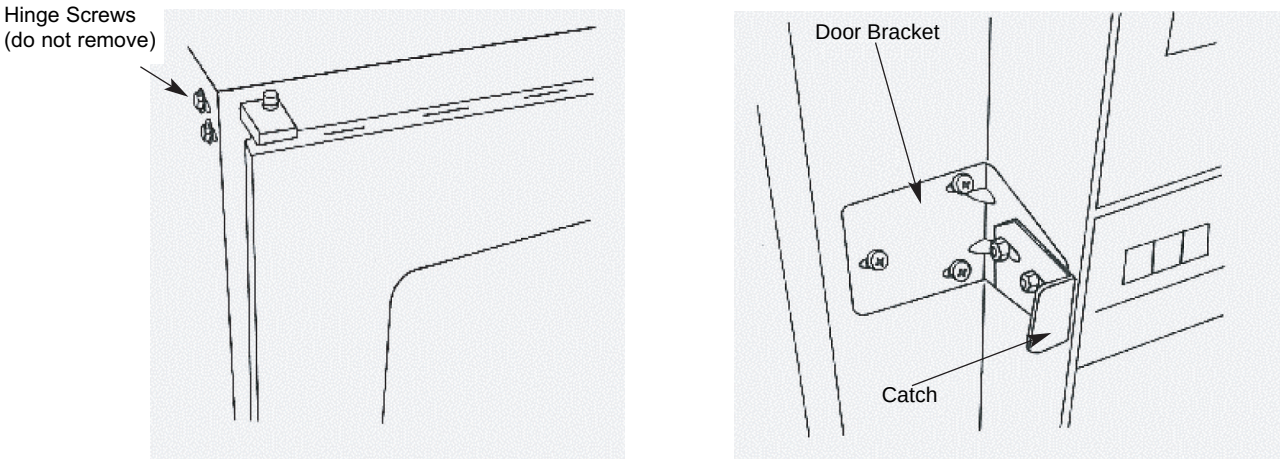

1. Loosen top and bottom hinges.

2. Loosen door bracket screws (3) and slide door bracket to right, loosen side - adjust nuts (2) and slide catch outward.

Figure 8-1. Door Alignment

3. Slide the bracket all the way to the right. Securely tighten the three screws.

4. Loosen the two slide-adjust nuts on the bracket and slide the catch outward.

5. Align the top door edge parallel to the top surface of the chassis to within 1/16 inch.

6. Draw a vacuum on the chamber while pressing in on both left and right sides of the door using your hands. Close vacuum valve at approximately 25 in. of Hg.

7. Tighten the two bolts for each hinge while lightly pressing each corner of the door in the area of the hinge being tightened.

Door Alignment Procedure (cont.)

8. Slide the cam assembly to engage the catch, and then turn the handle down so that the flat on the cam is vertical. Push gently on the catch until it touches the flat on the cam.

9. Insert a 1/32-inch thick shim (not supplied) between the catch and flat side of cam, and securely tighten the two nuts on the catch while applying vacuum.

10. Remove the shim. Then release vacuum and open door.

11. Try cam mechanism for clearance of both door edge and cam. If there is a clearance of more than 1/16 inch between the end of the cam and catch projection, adjust spacing by loosening the three catch screws and readjust catch.

12. Secure the three screws and check clearance of Step 11. Check that oven door positively seals after completion of this procedure.

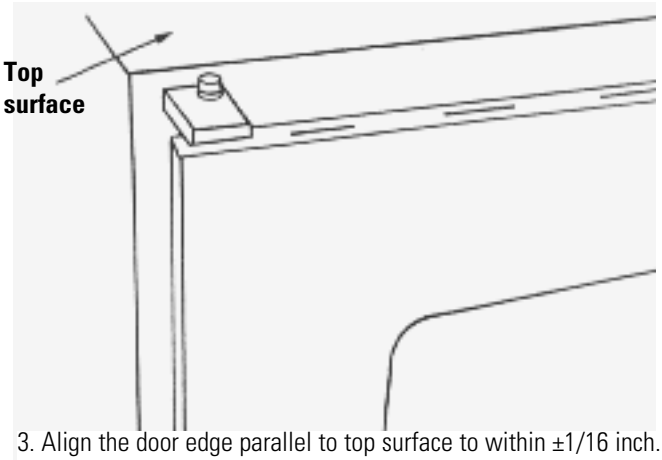

3. Align the door edge parallel to top surface to within ±1/16 inch.

4. Draw a 25 in. Hg ABS vacuum, then maintain vacuum and tighten hinges. Engage catch with cam so that cam-flat is vertical (handle down). Set clearance between flat and catch to 1/32 inch. Tighten nuts on catch.

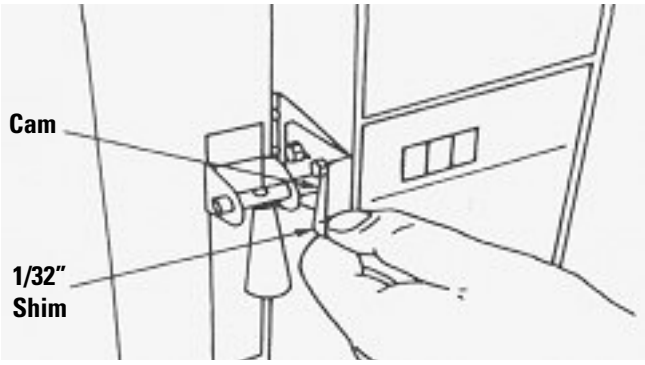

5. Clearance between end of cam should be no more than 1/16 of an inch. If greater than 1/16 inch, loosen bracket and shift as needed. Recheck alignment.

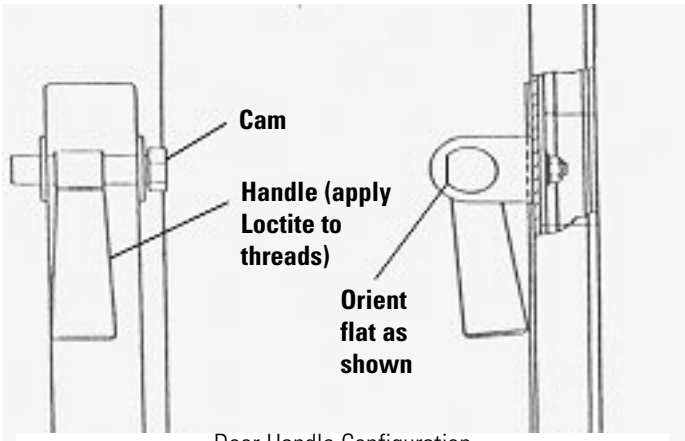

Door Handle Configuration

Section 9 Service

Correcting a malfunction in the Vacuum Oven primarily involves replacing the defective component. Components that can be replaced are listed in Replacement Parts. Most components can be accessed by removing the right side panel. There are six screws that hold the panel to the oven chassis.

Warning Secured access panels, covers, etc., should only be removed by experienced service personnel. Hazardous line voltages are present at various internally exposed points. ▲

Heater replacement is a much larger task, requiring near complete disassembly of the oven by two persons. Therefore it is recommended that when required, heaters be replaced by returning the oven to Thermo Fisher Scientific. It should be noted that, because of the very low watt density of the heater elements, an almost indefinite life is expected.

Because the Vacuum Oven is equipped with self-diagnostic features, the service recommendations here are limited to the Trouble Analysis Chart following which incorporates these features. To use this chart effectively, select the Symptom category(s) that best describes the observable malfunction, in particular the error codes. Proceed to the Probable Cause description(s) and take the necessary Corrective Action.

Table 9-1. Trouble Analysis Chart

Symptom	Probable Cause	Corrective Action
Oven does not heat. CRC error.	Error found in calibration data.	Perform temperature calibration.
Oven does not heat. OTC error.	Open Control Thermocouple.	Check control (lower) thermocouple continuity; replace if open.
Oven does not heat.	Current set point too low.	Increase set point.
	Open triac.	Check triac located in large heatsink.
	Oven heaters.	Check cold resistance across heaters, 7-8.5½ (115V) or 28-34½ (230V).
	Heater power turned off during program execution.	Enter Program Edit Mode. Check current step for heater operation.
OVR error.	"Over Range Error" Oven temp 25°C higher than set temp.	If set temperature is 25°C or more than actual chamber temperature, increase set point temporarily until oven temp decreases to within 25°C of desired value.
	Run-Away Heater	Check for shorted triac or controller malfunction.
Pressure readout indicates wrong pressure.	Calibration incorrect.	Perform Calibration procedure in this manual.
	Offset value incorrect.	Change offset so display value matches actual chamber pressure.
Temperature readout indicates wrong temperature.	Calibration incorrect.	Perform Calibration procedure in this manual.
	Offset value incorrect.	Change offset so display value matches actual temperature.
Vacuum readout indicates atmospheric pressure with vacuum being drawn on the oven at vacuum valve.	PURGE valve open.	Close PURGE valve.
	VACUUM valve closed.	Open VACUUM valve.
	Faulty door seal.	Grease or replace seal.
	Internal tygon tubing between inlet port and vacuum sensor disconnected or leaking.	Reconnect tubing, replace if necessary.
	Door improperly aligned.	Realign door following instruction given in this manual.

Section 10 Replacement Parts

The replacement parts and their corresponding numbers are provided in this section. Note that parts information is only valid at the publication date (see front cover of this manual), and subsequent revisions may have occurred after publication.

Description	Part Number
Control P.C. Board (115/230V)	LL103305
Power Switch (S1)	LL102627
Heater (HTR1, HTR2)	LL50098
Triac (Q1) LL	LL52563
Thermostat	LL52018
Control Thermocouple (TC1)	LL52025
Readout Thermocouple (TC2)	255036
Seal Replacement Kit	LL70435
Shelf	LL52002
Valve (Vacuum or Purge)	LL44342
Handle	LL02335
Cam	LL02371
Hose Connector	LL52062

Ordering Procedures

Please refer to the Specification Plate for the complete model number, serial number, and series number when requesting service, replacement parts or in any correspondence concerning this unit.

All parts listed herein may be ordered from the Thermo Scientific dealer from whom you purchased this unit or can be obtained promptly from the factory. When service or replacement parts are needed, check first with your dealer. If the dealer cannot process your request, then contact our Technical Services Department.

Prior to returning any materials, please contact our Technical Services Department for a “Return Materials Authorization” number (RMA). Material returned without an RMA number will be refused.

120V Schematic

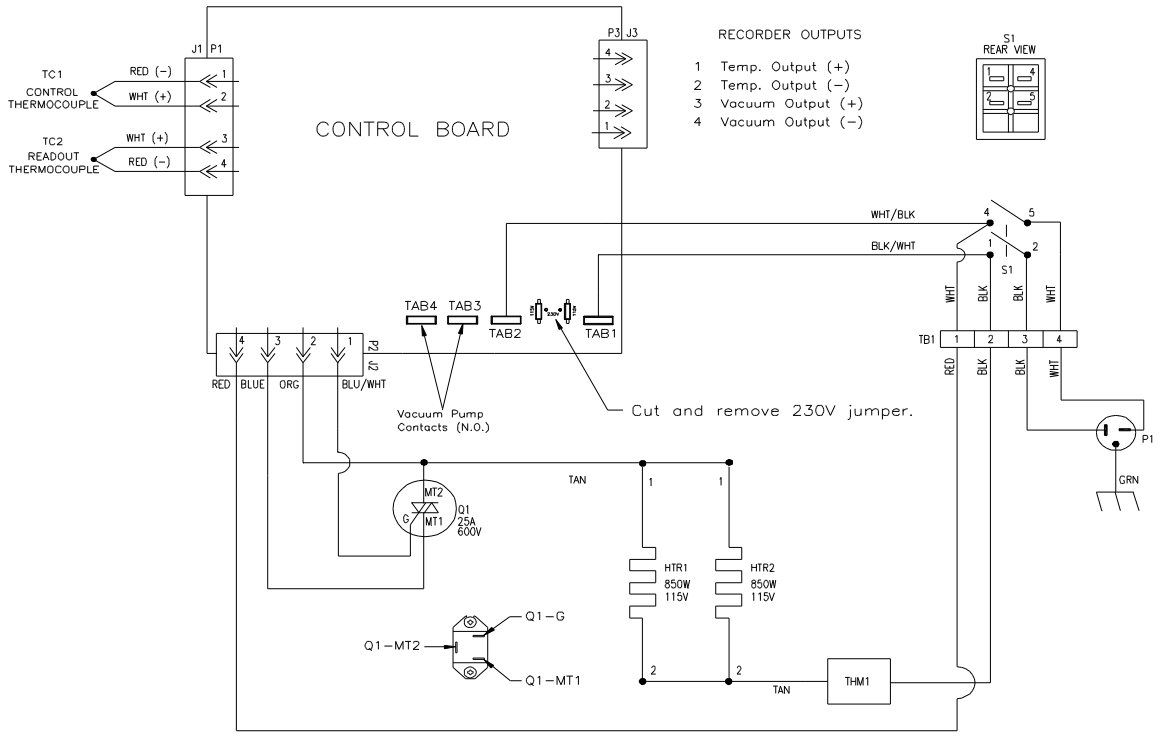

230V Schematic

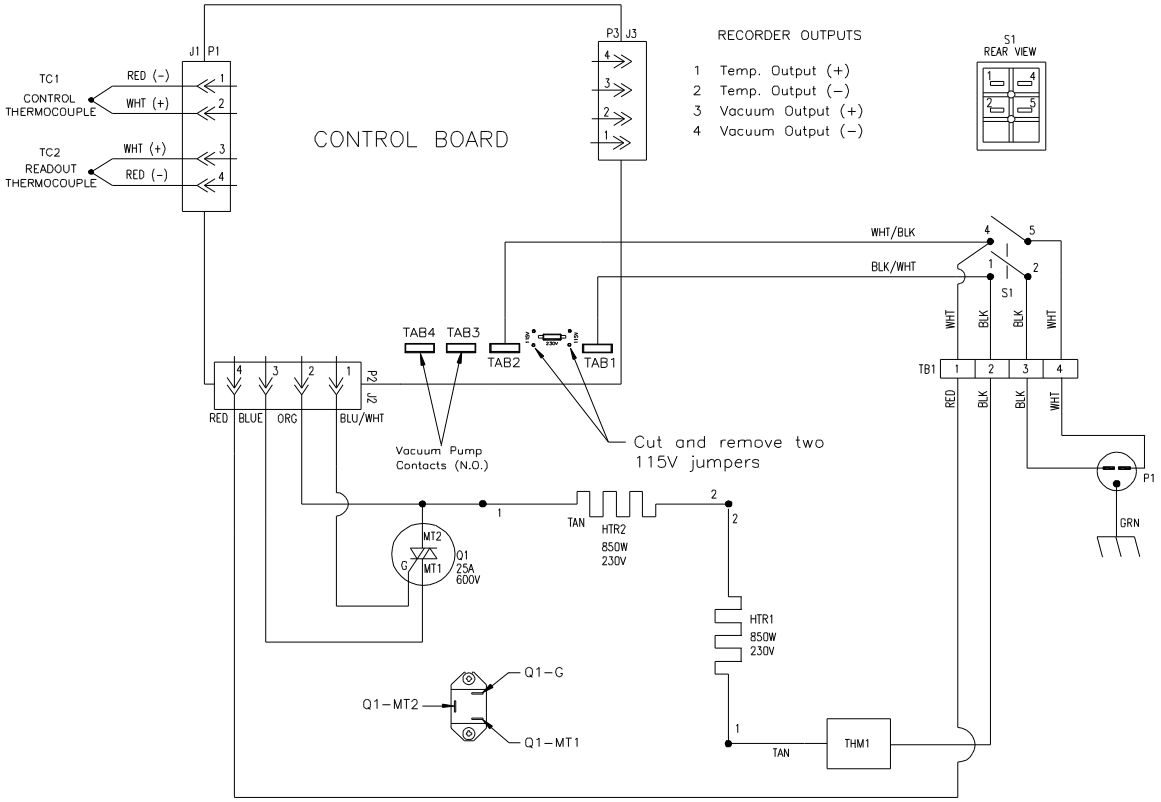

Thermo Scientific
401 Millcreek Road
Marietta, Ohio 45750
United States

www.thermofisher.com

ThermoFisher
SCIENTIFIC