Forma Scientific, Inc.

Model: 3110 Series*

Single Chamber Water Jacket Incubator

Model: 3210 Series*

Dual Chamber Water Jacket Incubator

Operating and Maintenance Manual

Manual No: 7033110 Rev. 2

Refer to listing of all models on Page i.

Read This Instruction Manual.

Failure to read, understand and follow the instructions in this manual may result in damage to the unit, injury to operating personnel, and poor equipment performance.

CAUTION! All internal adjustments and maintenance must be performed by qualified service personnel.

Refer to the serial tag on the back of this manual.

The material in this manual is for information purposes only. The contents and the product it describes are subject to change without notice. Forma Scientific, Inc. makes no representations or warranties with respect to this manual. In no event shall Forma Scientific, Inc. be held liable for any damages, direct or incidental, arising out of or related to the use of this manual.

Single Chamber Models			
Model	**CO_2 Sensor****	**O_2**	**Voltage*****
3110	T/C	No	115
3111	T/C	No	230
3120	IR	No	115
3121	IR	No	230
3130	T/C	Yes	115
3131	T/C	Yes	230
3140	IR	Yes	115
3141	IR	Yes	230

Dual Chamber Models			
Model*	**CO_2 Sensor****	**O_2**	**Voltage*****
3210	T/C	No	115
3211	T/C	No	230
3220	IR	No	115
3221	IR	No	230
3230	T/C	Yes	115
3231	T/C	Yes	230
3240	IR	Yes	115
3241	IR	Yes	230

*The models listed as dual chamber models are stacked or dual chamber units. These units arrive as single stand-alone units. They may be stacked one on top of the other or configured side by side with opposite door swing.

**T/C is a thermal conductivity sensor. IR is an infrared sensor.

***All units are 50/60 Hz.

MANUAL NUMBER 7033110

REV	ECR/ECN	DATE	DESCRIPTION	By
2	--	4/10/00	Quark format	ccs
1	18891/SI-7832	2/23/00	Change cooling coil tubing from copper to vinyl, newloc fittings	ccs
0	--	1/3/00	Release 4, Class 100 updates	ccs

Important operating and/or maintenance instructions. Read the accompanying text carefully.

Ce symbole attire l'attention de l'utilisateur sur des instructions importantes de fonctionnement et/ou d'entretien. Il peut être utilisé seul ou avec d'autres symboles de sécurité. Lire attentivement le texte d'accompagnement.

Wichtige Betriebs- und/oder Wartungshinweise. Lesen Sie den nachfolgenden Text sorgfältig.

Importante instruccions de operacion y/o mantenimiento. Lea el texto acompanante cuidadosamente.

Potential electrical hazards. Only qualified persons should perform procedures associated with this symbol.

Ce symbole attire l'attention de l'utilisateur sur des risques électriques potentiels. Seules des personnes qualifiées doivent appliquer les instructions et les procédures associées à ce symbole.

Gefahr von Stromschlägen. Nur qualifizierte Personen sollten die Tätigkeiten ausführen, die mit diesem Symbol bezeichnet sind.

Potencial de riesgos electricos. Solo personas das capacitadadas deben ejecutar los procedimientos asociadas con este simbulo.

Equipment being maintained or serviced must be turned off and locked off to prevent possible injury.

Risques potentiels liés à l'énergie. L'équipement en entretien ou en maintenance doit être éteint et mis sous clé pour éviter des blessures possibles.

Geräte, an denen Wartungs- oder Servicearbeiten durchgeführt werden, müssen abgeschaltet und abgeschlossen werden, um Verletzungen zu vermeiden.

El equipo recibiendo servicio o mantenimiento debe ser apagado y segurado para prevenir danos.

Hot surface(s) present which may cause burns to unprotected skin, or to materials which may be damaged by elevated temperatures.

Présence de surface(s) chaude(s) pouvant causer des brûlures sur la peau non protégée, ou sur des matières pouvant être endommagées par des températures élevées.

Heiße Oberfläche(n) können ungeschützter Haut Verbrennungen zufügen oder Schäden an Materialien verursachen, die nicht hitzebeständig sind.

Superficias calientes que pueden causar quemaduras a piel sin proteccion o a materiales que pueden estar danados por elevadas temperaturas.

- √ Always use the proper protective equipment (clothing, gloves, goggles, etc.)
- √ Always dissapate extreme cold or heat and waer protective clothing.
- √ Always follow good hygiene practices.
- √ Each individual is responsible for his or her own safety.

Do You Need Information or Assistance on Forma Scientific Products?

If you do, please contact us 8:00 a.m. to 7:00 p.m. (Eastern Time) at:

1-740-373-4763	Direct
1-888-213-1790	Toll Free, U.S. and Canada
1-740-373-4189	FAX
http://www.forma.com	Internet Worldwide Web Home Page
fservice@forma.com	Service E-Mail Address

Our **Sales Support** staff can provide information on pricing and give you quotations. We can take your order and provide delivery information on major equipment items or make arrangements to have your local sales representative contact you. Our products are listed on the Internet and we can be contacted through our Internet home page.

Our **Service Support** staff can supply technical information about proper setup, operation or troubleshooting of your equipment. We can fill your needs for spare or replacement parts or provide you with on-site service. We can also provide you with a quotation on our Extended Warranty for your Forma products.

Whatever Forma® products you need or use, we will be happy to discuss your applications. If you are experiencing technical problems, working together, we will help you locate the problem and, chances are, correct it yourself...over the telephone without a service call.

When more extensive service is necessary, we will assist you with direct factory trained technicians or a qualified service organization for on-the-spot repair. If your service need is covered by the warranty, we will arrange for the unit to be repaired at our expense and to your satisfaction.

Regardless of your needs, our professional telephone technicians are available to assist you Monday through Friday from 8:00 a.m. to 7:00 p.m. Eastern Time. Please contact us by telephone or fax. If you wish to write, our mailing address is:

Forma Scientific, Inc.
Millcreek Road, PO Box 649
Marietta, OH 45750

International customers please contact your local Forma Scientific distributor.

Table of Contents

Section 1 - Installation and Start-up . . . . . .1 - 1
1.1 Name and Description of Parts . . . . . .1 - 1
1.2 Control Panel Keys, Displays and Indicators . . . . . .1 - 2
1.3 Operating the Control Panel . . . . . .1 - 2
1.4 Displays . . . . . .1 - 3
1.5 Installing the Unit . . . . . .1 - 4
a. Choosing the Location . . . . . .1 - 4
b. Stacking the Incubators . . . . . .1 - 4
c. Preliminary Cleaning and Disinfecting . . . . . .1 - 5
d. Installing the Shelves . . . . . .1 - 5
e. Installing the Access Port Stopper . . . . . .1 - 6
f. Installing the HEPA Filter . . . . . .1 - 6
g. Leveling the Unit . . . . . .1 - 6
h. Connecting the Unit to Electrical Power . . . . . .1 - 6
i. Filling the Water Jacket . . . . . .1 - 6
j. Filling the Humidity Pan . . . . . .1 - 6
k. Connecting the CO_2 Gas Supply . . . . . .1 - 7
l. Connecting the N_2 Gas Supply . . . . . .1 - 8
1.6 Incubator Start-Up . . . . . .1 - 8
a. Setting the Operating Temperature . . . . . .1 - 8
b. Setting the Overtemp Setpoint . . . . . .1 - 8
c. Setting the CO_2 Setpoint . . . . . .1 - 9
d. Setting the O_2 Setpoint . . . . . .1 - 9
Section 2 - Calibration . . . . . .2 - 1
2.1 Calibration Mode . . . . . .2 - 1
a. Calibrating the Temperature . . . . . .2 - 1
b. Calibrating Thermal Conductivity CO_2 System . .2 - 1
c. Calibrating the T/C %CO_2 Zero to Ambient . . . .2 - 1
d. Calibrating the T/C %CO_2 Span . . . . . .2 - 2
e. Calibrating the Infra-Red CO_2 System. . . . . .2 - 2
f. Calibrating the O_2 system . . . . . .2 - 3
g. Calibrating Relative Humidity . . . . . .2 - 3
Section 3 - Configuration . . . . . .3 - 1
3.1 Configuration Mode . . . . . .3 - 1
a. Turning the Audible Alarm ON/OFF . . . . . .3 - 1
b. Setting an Access Code . . . . . .3 - 1
c. Setting Low Temp Alarm Limit (tracking alarm) 3 - 1
d. Setting High Temp Alarm Limit (tracking alarm) 3 - 1
e. Enabling Temperature Alarms to Trip Contacts . .3 - 1
f. Setting Low CO_2 Alarm Limit (tracking alarm) .3 - 2
g. Setting High CO_2 Alarm Limit (tracking alarm) .3 - 2
h. Enabling CO_2 Alarms to Trip Contacts . . . . . .3 - 2
i. Setting New Zero Number for T/C CO_2 Sensors .3 - 2
j. Setting New Span Number for T/C CO_2 Sensors .3 - 2
k. Setting a Low RH Alarm Limit . . . . . .3 - 2
l. Enabling RH Alarms to Trip Contacts . . . . . .3 - 3
m. New O_2 Cell . . . . . .3 - 3
n. Setting a Low O_2 Alarm Limit (tracking alarm) .3 - 3
o. Setting a High O_2 Alarm Limit (tracking alarm) .3 - 3
p. Enabling O_2 Alarms to Trip Contacts . . . . . .3 - 3
q. Enabling Temp/RH to be Displayed . . . . . .3 - 3
r. Enabling CO_2/O_2 to be Displayed . . . . . .3 - 4
s. Enabling O2 Compensation for T/C CO_2 Systems 3 - 4
t. Setting a RS485 Communications Address (1535 compatible only) . . . . . .3 - 4
u. Selecting Primary Tank with Gas Guard Option .3 - 4
v. Enabling the Gas Guard System . . . . . .3 - 4
w. Setting the Door Heat . . . . . .3 - 4
Section 4 - Alarms . . . . . .4 - 1
4.1 Alarms . . . . . .4 - 1
4.2 Sensor Fault Alarms . . . . . .4 - 2
4.3 REPL O2 SNSR (Alarm) . . . . . .4 - 2
4.4 REPL IR SNSR (Alarm) . . . . . .4 - 2
4.5 CO2 SENS ERR . . . . . .4 - 2
I/R Units . . . . . .4 - 2
4.6 IR AUTOZ ERR . . . . . .4 - 2
Section 5: Routine Maintenance . . . . . .5 - 1
5.1 Disinfecting the Incubator Interior . . . . . .5 - 1
5.2 Cleaning the Cabinet Exterior . . . . . .5 - 1
5.3 Cleaning the Humidity Pan . . . . . .5 - 1
5.4 Reversing the Door Swing . . . . . .5 - 2
a. Reversing the Hinges for the Exterior Door . . . .5 - 2
5.5 Replacing Fuses . . . . . .5 - 3
5.6 HEPA Filter Maintenance . . . . . .5 - 3
5.7 Draining Water Jacket . . . . . .5 - 6
Section 6 - Factory Installed Options . . . . . .6 - 1
6.1 Connections to External Equipment . . . . . .6 - 1
a. Connecting the Remote Alarm Contacts . . . . . .6 - 1
b. Connecting the RS485 Interface (190523) . . . . .6 - 1
c. Connecting the Analog Output Boards (190512, 190543, 190544) . . . . . .6 - 1
6.2 Gas Guard for CO_2 or N_2 (190640/190642) . . . . . .6 - 2
a. Connecting the CO_2 Gas Supplies (refer to Figures 6-7 and 6-9): . . . . . .6 - 2
b. Connecting the N_2 Gas Supplies (refer to Figure 6-8): . . . . . .6 - 2
c. Activating the Built-in Gas Guard: . . . . . .6 - 3
d. Operation of the CO_2 or N_2 Gas Guard: . . . . . .6 - 3
6.3 Humidity Readout (190643) . . . . . .6 - 3
a. Factors Affecting Humidity Level in Chamber: . .6 - 3
b. Accuracy of the Humidity Readout: . . . . . .6 - 4
6.4 Factory Installed Cooling Coil . . . . . .6 - 4
a. Installing the Cooling Coil Incubator . . . . . .6 - 4
Section 7 - Specifications . . . . . .7 - 1
Section 8 - Spare Parts . . . . . .8 - 1
a. All Models . . . . . .8 - 1
b. Spare Parts for 230 V units (3111, 3121, 3131, 3141): . . . . . .8 - 1
c. Spare Parts for IR or O2 units (3120, 3121, 3130, 3131, 3140 and 3141): . . . . . .8 - 1
d. Spare Parts for Gas Guards (190640/190642): . .8 - 1
e. Spare Parts for Humidity Readout (190643): . . .8 - 1
f. Spare Parts for Data Output Options: . . . . . .8 - 1
Section 9 - Electrical Schematics . . . . . .9 - 1
Appendix A . . . . . .A - 1

Section 1 - Installation and Start-up

1.1 Name and Description of Parts

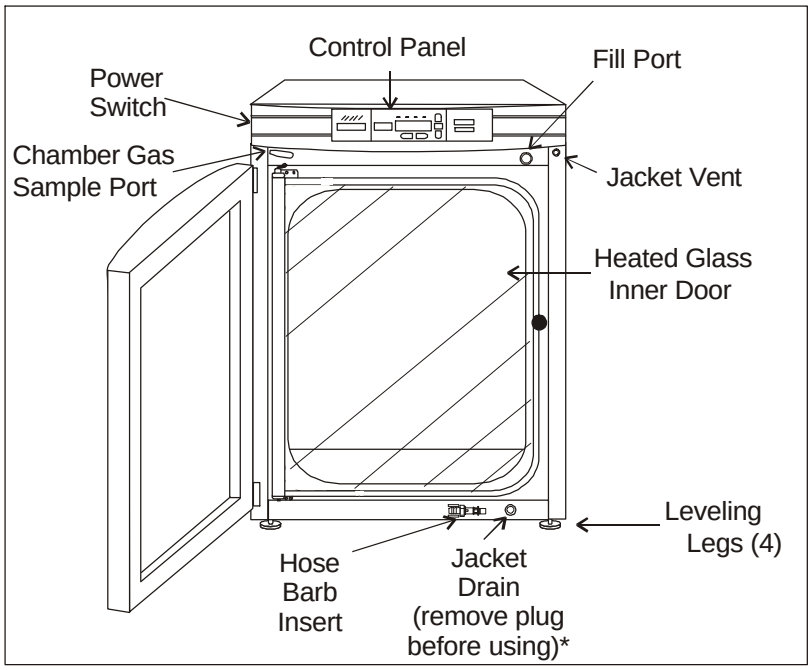

Figure 1-1
Water Jacket Incubator

- Outer Door - Reversible to opposite swing, see Section 5.4
- Heated Inner Door - Keeps chamber interior dry. Reversible to opposite swing, see Section 5.4.
- Chamber Gas Sample Port - Used for sampling chamber CO_2 content, using a Fyrite or similar instrument.

Note: The port must remain capped when not in use.

- Main Power Switch
- Control Panel - Keypad, Displays and Indicators. (See Figure 1-2).
- Fill Port - Used for filling the water jacket.
- Water Jacket Vent- Do not cover! Allows air to escape from the water jacket during filling and normal expansion and contraction when the incubator heats or cools.
- Leveling Legs - Used to level the unit.
- Water Jacket Drain – Remove plug and use hose barb insert included. Plug when not in use.

Note: The incubators are stackable. See Section 1.5.

*When setting up the incubator, install the cover plate packed inside the incubator shipping carton.

1.2 Control Panel Keys, Displays and Indicators

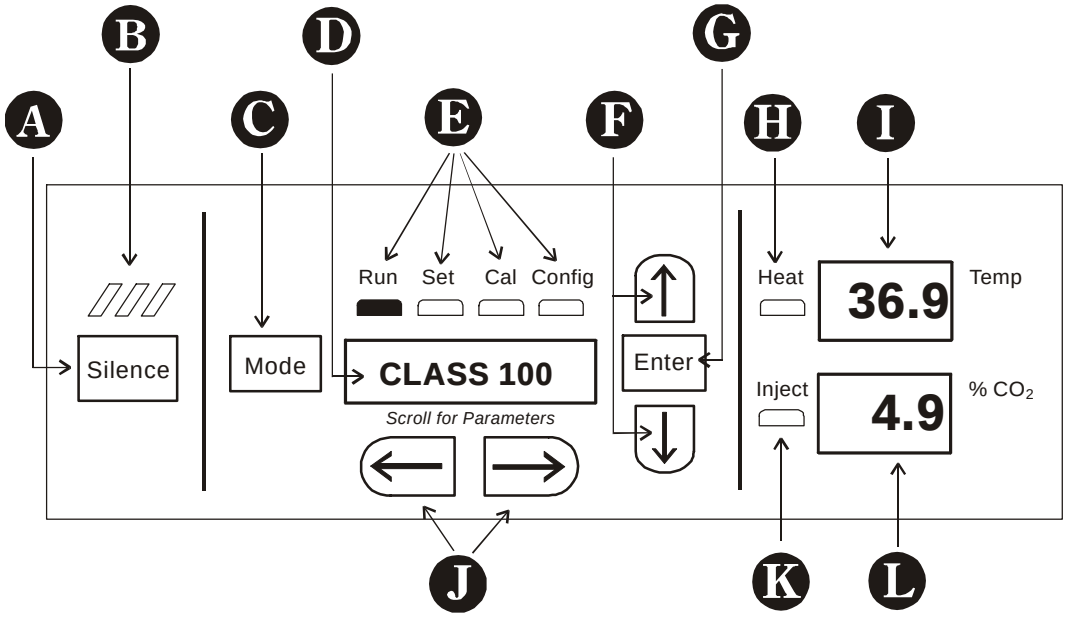

Figure 1-2 Control Panel

A SILENCE - Silences the audible alarm.

B Alarm Indicator - Pulses on/off during an alarm condition in the cabinet.

C MODE Select Switch - Used to select Run, Setpoints, Calibration and System Configuration Modes.

D Message Center - Displays system status.

E Mode Select Indicators-

Run: Run Menu

Set: Set Points Menu

Cal: Calibrate Menu

Config: Configuration Menu

F Up and Down Arrows: Increases or decreases the parameter values that are numbers, toggles the parameter values that are choices.

G Enter: Accepts changes to the calibration settings

H Heat Indicator: Lights when power is applied to the heaters.

I Temp Display: Can be programmed to display temperature continuously, RH continuously (with RH option), or toggle between temperature and humidity (with RH option). See Section 3.1, Configuration.

J Scoll for Parameters Keys: Scrolls the operator through the parameters of the mode that is selected.

K Inject Indicator: Lights when gas is being injected into the incubator. If the %CO2/O2 display (item L) is continuously displaying CO2, the light indicates CO_2 injection only. If the %CO2/O2 display is continuously displaying O2, light indicates N_2 injection. If the %CO2/O2 is toggling, either a CO_2 or N_2 injection will cause the indicator to light.

L %CO2/O2 display: Can be programmed to display CO2 continuously or O2 continuously (on units equipped with O_2), or toggle between CO2 and O2 (on units equipped with O_2) See Section 3.1, Configuration.

1.3 Operating the Control Panel

The Model 3110 Series water jacket incubator has four basic modes, which allow incubator setup. The modes are as follows: Run, Setpoints, Calibration and System Configuration.

- **Run** is the default mode that the incubator will normally be in during operation.
- **Set** is used to enter system setpoints for incubator operation.
- **Cal** is used to calibrate various system parameters to the customer's satisfaction.
- **Config** is the system configuration mode that allows for custom setup of various options.

The chart below shows the selections under each of the modes.

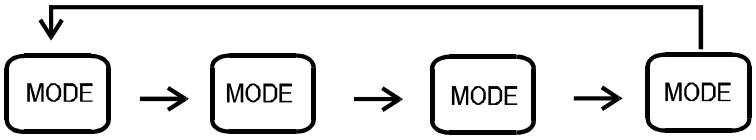

RUN	SETPOINT	CALIBRATION	CONFIGURATION
Default Mode	**Temperature**	**Temp Offset**	**Audible**
	Overtemp	**CO2 Zero**	**Access Code**
	CO2	**CO2 Span**	**Temp Lo Alarm**
	O2	*IR CO2 Span*	**Temp Hi Alarm**
		O2 Span	**Temp Relay**
		RH Offset	**CO2 Lo Alarm**
			CO2 Hi Alarm
			CO2 Relay
			CO2 Z & S #'s
			RH Lo Alarm
			RH Relay
			O2 Hi Alarm
			O2 Lo Alarm
			O2 Relay
			Display 1 Setup
			Display 2 Setup
			O2 Compensation
			RS485 Address
			Gas Guard Setup
			Door Heat

****Base Unit Displays**
***Option Displays*

Scroll for Parameters Keys: Steps the operator through the parameters of SET, CAL and CONFIG Modes. The !right arro!w goes to the next parameter, the left arrow returns to the previous parameter.

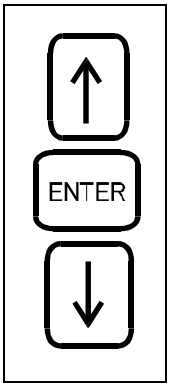

Up Arrow: Increases or toggles the parameter value that has been selected in the SET, CAL, and CONFIG Modes.

Enter: Must press Enter key to save to memory all changed values.

Down Arrow: Decreases or toggles the parameter values that have been selected in the SET, CAL and CONFIG Modes.

Silence Key: Press to silence the audible alarm. See Section 4 for alarm ringback times.

1.4 Displays

Message Center

Displays the system status (Mode) at all times. Displays CLASS 100 during normal operation, or alarm messages if the system detects an alarm condition. See Section 4.1, Alarms.

Upper and Lower Displays

These 7-segment displays vary depending upon the options present and the configuration chosen. The upper display can display temp or RH, or toggle between them. The bottom display can display CO2 or O2, or toggle between them. See Section 3.1, Configuration.

1.5 Installing the Unit

a. Choosing the Location

1. Locate the unit on a firm, level surface capable of supporting the unit's operational weight of 365 lbs. (166 kg).
2. Locate away from doors and windows and heating and air conditioning ducts.
3. Allow enough clearance behind the unit for electrical and gas hook-up.

b. Stacking the Incubators

If the units have been in service, disconnect the power cord connector and drain the water jacket of the designated top unit before stacking.

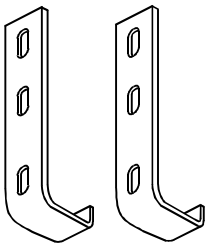

Note: Stacking brackets (shown at left) stacking bolts, washers, and bolts for stacking are included with each unit.

Figure 1-3 Stacking brackets

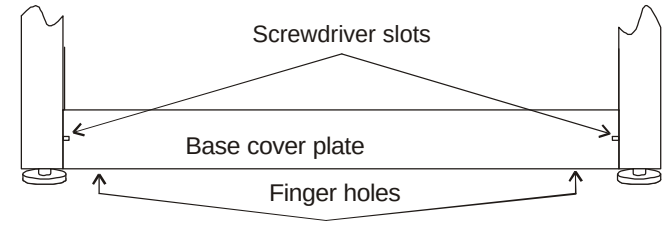

Front of top Incubator **Figure 1-4**

1. Designate one incubator to be the top unit and the other as the bottom unit. Remove the base cover plate from the top unit using the finger holes in the base or using a slotted screwdriver. (Figure 1-4)

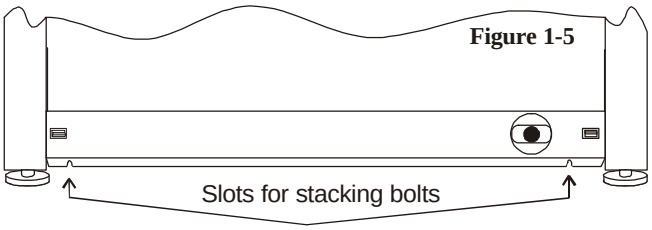

Figure 1-5

Front of top Incubator, base cover plate removed

2. Note the two slots in the base of the incubator which accommodate the stacking bolts. Refer to Figure 1-5.

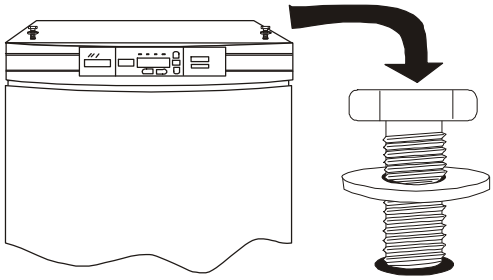

Figure 1-6

3. Remove the two plastic plugs from the bolt holes in the exterior top of the bottom unit. Install the 1/2" long 5/16-18 stacking bolts and washers into the bolt holes - do not tighten the bolts at this time. Refer to Figure 1-6.
4. Unscrew and remove the leveling feet from the top unit and lift it onto the bottom unit, off-setting the base of the top unit approximately 2-3 inches behind the stacking bolts and washers.

This incubator weighs 265 lbs (120kg) before filling. Have sufficient personnel to lift it.

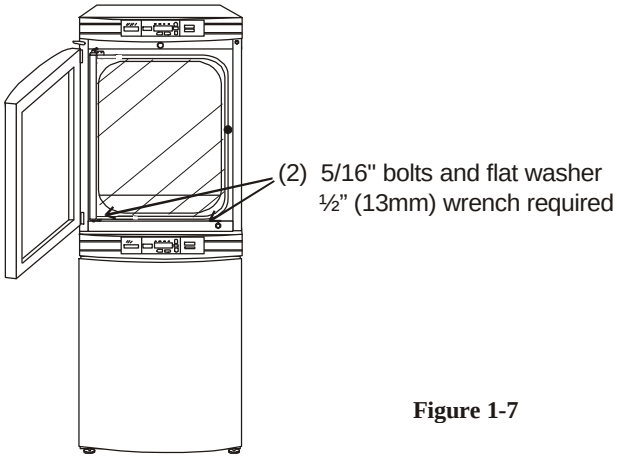

Figure 1-7

5. Align the sides of the top unit with the bottom unit and slide the top unit forward until the slots in the base of the top unit align with the 5/16" - 18 stacking bolts in the exterior top of the bottom unit. Refer to Figure 1-7.

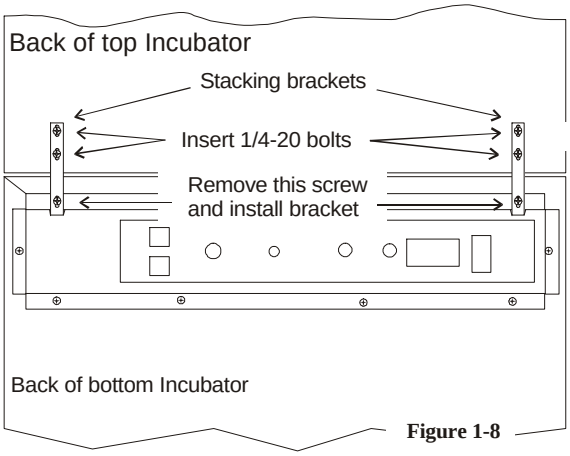

Figure 1-8

6. Remove and save the two screws from the back of the control panel on the bottom unit as identified in Figure 1.8.
7. Insert the stacking brackets into the slots on the rear of the control panel of the bottom unit as shown in Figure 5-6. Align the slots in the brackets with the mounting holes on the rear of the incubators. Secure the brackets with the screws saved above and the 1/4-20 bolts provided in the stacking kit. A 7/16” wrench or socket will be required for the bolts.
8. Secure the base of the top unit to the exterior top of the bottom unit by tightening the 5/16-18 stacking bolts using a 1/2” (13mm) wrench or suitable tool.
9. Replace the base cover on the top unit.
10. The stacked units are ready to be placed into service.

c. Preliminary Cleaning and Disinfecting

1. Remove the protective plastic coating on the shelf supports and air duct, if present.
2. Using a suitable laboratory disinfectant, disinfect all interior surfaces including shelves and shelf supports, door gaskets, blower wheel and CO_2 sensor. Refer to Section 5.1.

d. Installing the Shelves

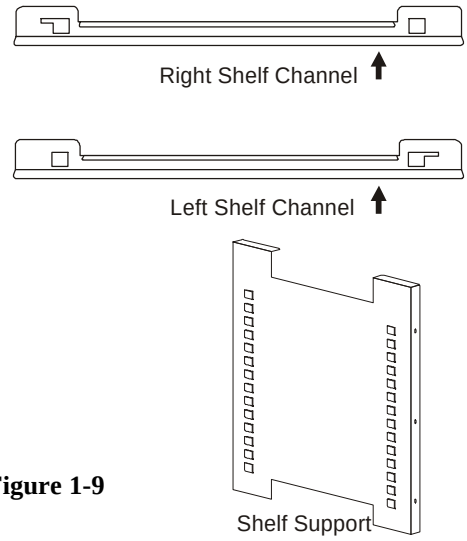

Figure 1-9

1. Install the shelf supports with the tabs facing into the center of the chamber with their slots up. There are no right side or left side supports, simply rotate one of them to fit the opposite side. Tilt the shelf supports as they are placed in the chamber so the tops fit into the top air duct, then guide them into the vertical position. Figure 1-9 shows the support as it would be oriented for the right side of the chamber.
2. Referring to Figure 1-9, note that there are left side and right side shelf channels.

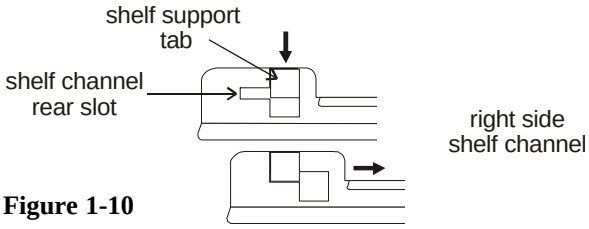

Figure 1-10

3. Install the shelf channels by placing the channel’s rear slot over the appropriate rear tab on the shelf support. Pull the shelf channel forward and engage the channel’s front slot into the shelf support’s appropriate forward tab. Refer to Figure 1-10.
4. Figure 1-11 shows one of the channels installed on the right shelf support.

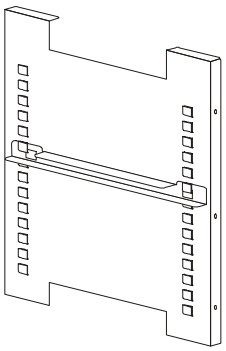

Figure 1-11

e. Installing the Access Port Stopper

Locate the opening in the top left corner of the interior chamber. Install the beveled end of the neoprene stopper in the opening.

f. Installing the HEPA Filter

1. Remove the filter from the shipping box.
2. Remove the plastic coating from the filter, using caution not to touch the filter media.
3. Install the filter as shown in Figure 1-12.
4. Refer to Section 5.6 for HEPA filter maintenance.

Use caution when handling the filter. The media can be damaged if it is mishandled.
To avoid damage to the incubator, do not operate the unit without the HEPA filter in place.

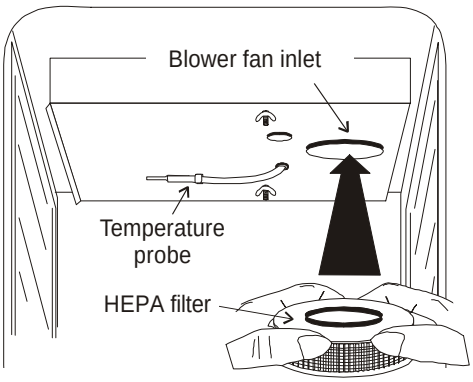

Figure 1-12

g. Leveling the Unit

Check the unit for being level by placing a bubble-style level on one of the shelves. Turn the hex nut on the leveler counterclockwise to lengthen the leg, or clockwise to shorten it. Level the unit front-to-back and left-to-right.

h. Connecting the Unit to Electrical Power

See the serial tag on the side of the unit for electrical specifications, or refer to the electrical schematics in Section 9 of this manual.

Connect the incubator to a grounded dedicated circuit only.
The power cord connector is the mains disconnect device for the incubator. Position the unit so that it can be easily disconnected.

Plug the provided power cord into the power inlet connector (See Figure 1-13) and into the grounded dedicated circuit.

Electrical Specifications

Models 3110, 3120, 3130, 3140:
115V, 50/60Hz, 3.6A, 1 PH, 2W

Models 3111, 3121, 3131, 3141:
230V, 50/60Hz, 2.0A, 1 PH, 2W

i. Filling the Water Jacket

Turn the power switch on. ADD WATER will appear in the message center. Press the Silence key to silence the alarm.

Note: The fill port has a plug that must be removed before filling and replaced after filling is complete.

Fill the water jacket with 11.7 gallons (43.5 liters) of water with a quality of 50K ohm to 1M ohm. Vinyl tubing and funnel for filling are included in the accessory bag shipped with the unit. Connect vinyl tubing to the fill port. See Figure 1.1.

When the jacket is full, the audible alarm will sound a continuous tone for 10 seconds and the alarm condition will be cleared. Refer to Section 4.1, Table of Alarms.

j. Filling the Humidity Pan

For best operation of the incubator, sterilized distilled, demineralized or de-ionized water should be used in the humidity pan. Water purity should be in the resistance range of 50K Ohm/cm to 1M Ohm/cm, or a conductivity range of 20.0 uS/cm to 1.0 uS/cm. Refer to ASTM Standard D5391-93 or D4195-88 for measuring water purity.

Distillation systems, as well as some types of reverse osmosis water purity systems, can produce water in the quality range specified. Tap water is not recommended as it may contain chlorine, which can deteriorate the stainless steel. Tap water may also have a high mineral content, which would produce a build-up of scale in the reservoir. High purity, ultra pure or milli-q water is not recommended as it is an extremely aggressive solvent and will deteriorate the stainless steel. High purity water has a resistance of above 1M Ohm to 18M Ohm. Even high purity water can contain bacteria and organic contaminants. Water should always be sterilized or treated with a decontaminant, safe for use with stainless steel as well as safe for the product, prior to being introduced into the humidity pan.

Distilled or de-ionized water used in the humidity pan must be within a water quality resistance range of 50K Ohm/cm to 1M Ohm/cm to protect and prolong the life of the stainless steel. Use of water outside the specified range will decrease the operating life of the unit and may void the warranty.

Fill the humidity pan with 0.8 gallons (3 liters) of sterile, distilled water. Place the pan directly on the incubator floor to ensure best humidity and temperature response.

Check the water level and change it frequently to avoid contamination. Do not allow the water level to fluctuate significantly. “Dry-outs” will have an adverse effect on the humidity level.

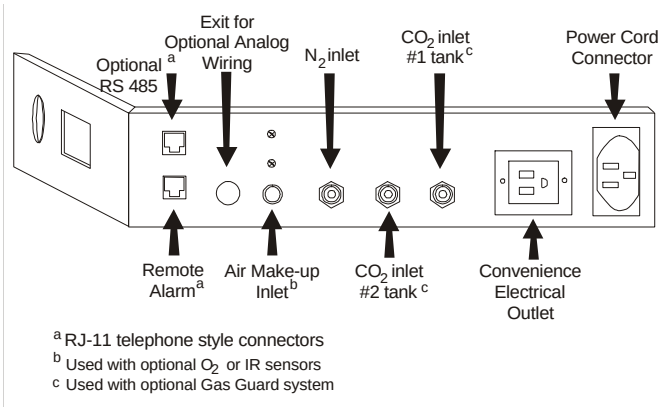

Figure 1-13,
Rear Panel View, showing all options

k. Connecting the CO_2 Gas Supply

High concentrations of CO_2 gas can cause asphyxiation! OSHA Standards specify that employee exposure to carbon dioxide in any eight-hour shift of a 40-hour work week shall not exceed the eight-hour time weighted average of 5000 PPM (0.5% CO_2). The short term exposure limit for 15 minutes or less is 30,000 PPM (3% CO_2). Carbon dioxide monitors are recommended for confined areas where concentrations of carbon dioxide gas can accumulate.

The CO_2 gas supply being connected should be industrial grade 99.5% pure and should not contain siphon tubes. Install a two-stage pressure regulator at the cylinder outlet. The high pressure gauge at the tank should have 0-2000 psig range and the low pressure gauge, at the incubator inlet, should have a 0-30 psig range. Input pressure to the incubator must be maintained at 15 psig (103.4 kPa).

The incubator has serrated fittings on the back of the cabinet to connect the gas supply. Refer to Figure 1-13. The fitting is labeled CO2 inlet #1 Tank. Make sure that the connections are secured with clamps. Check all fittings for leaks.

For units having the CO_2 Gas Guard option, refer to Section 6.2.

This incubator is designed to be operated with CO_2 gas only. Connecting a flammable or toxic gas can result in a hazardous condition.
Gases other than CO_2 should not be connected to this equipment. CO_2 gas cylinders have UN1016 labeled on the cylinder and are equipped with a CGA 320 outlet valve. Check the gas cylinder for the proper identification labels.
The CO_2 gas supply being connected to the incubator should be industrial grade, 99.5% pure. Do not use CO_2 gas cylinders equipped with siphon tubes. A siphon tube is used to extract liquid CO_2 from the cylinder, which can damage the pressure regulator. Consult with your gas supplier to ensure that the CO_2 cylinder does not contain a siphon tube. Gas cylinders should also be secured to a wall or other stationary object to prevent them from tipping.
A two-stage CO_2 pressure regulator is required to be installed on the outlet valve of the gas cylinder. Input pressure to the incubator must be maintained at 15 psig (103.4 kPa) for proper performance of the CO_2 control system. (A single stage CO_2 pressure regulator will not maintain 15 psig (103.4 kP).
If higher purity CO_2 is desired inside the incubator (greater than 99.5% pure), the pressure regulator should be constructed with a stainless steel diaphragm along with specifying the purity of the CO_2 from the gas supplier. Follow the manufacture's instructions to ensure proper and safe installation of the pressure regulator on the gas cylinder.
Consult your facility safety officer to ensure that the equipment is installed in accordance with the codes and regulations that are applicable in your area.

l. Connecting the N_2 Gas Supply

This connection applies only to those units that have an O_2 system. The N_2 gas supply being connected should be 99.99% pure. Do not use liquid nitrogen. Follow the same steps as in the section above for preparing the N_2 tank for hookup to the incubator. For units having the N_2 Gas Guard option, refer to Section 6.2. Connect the vinyl lines from the N_2 tank to the serrated fitting labeled N_2 Inlet and secure with the provided clamp. Check all fittings for leaks.

1.6 Incubator Start-Up

Now that the incubator has been properly installed, connected to power, filled with water, humidity pan filled, and connected to gas supplies, system setpoints can be entered. The following setpoints can be entered in set mode: temperature, over temperature, CO_2, and O_2. To enter Set Mode, press the mode key until the Set indicator lights. Press the right and/or left arrow keys until the proper parameter appears in the message center. See Chart 1-1 for more detail.

a. Setting the Operating Temperature

Incubator Models 3110, 3111 have an operating temperature range of 10 to 55°C, models 3120, 3121 at 10 to 50°C, and models 3130, 3131, 3140, and 3141, at 10 to 45°C. All units require the cooling coil option to run at any temperature lower that 5°C above ambient. The incubator is shipped from the factory with a temperature setpoint of 10°C. At this setting all heaters and alarms are turned off.

To change the operating temperature setpoint:

1. Press the Mode key until the Set indicator lights.
2. Press the right arrow until Temp XX.X is displayed in the message center.
3. Press the up/down arrow until the desired temperature setpoint is displayed.
4. Press Enter to save the setpoint.
5. Press the Mode key until the Run Indicator lights to go to run mode or right/left to go to next/previous parameter.

b. Setting the Overtemp Setpoint

The independent overtemp circuit is designed as a safety to protect the incubator only. It is not intended to protect or limit the maximum temperature of the cell cultures or customer's equipment inside the incubator if an overtemp condition occurs.

The incubator is equipped with an independent circuit that monitors the air temperature in the cabinet. The independent overtemp circuit is designed as a safety for the incubator only. Should the system's temperature control fail, this circuit would cut out all heaters when the cabinet's temperature reaches the Overtemp setpoint. When an incubator is operating in an overtemp condition, the temperature control in the incubator will be ±1°C around the overtemp setpoint.

The overtemp's function is to prevent abnormally high temperatures that will occur if the heaters are locked on as a result of a failure in the main temperature control. Although the overtemp circuit will control the chamber temperature close to the overtemp setpoint, it is not intended to protect or limit the maximum temperature of the cell cultures or the equipment inside the chamber when the overtemp condition occurs.

The factory setting for the Overtemp is 40°C. It can be set over a range of temp setpoint + 0.5°C to 60°C. If the temperature setpoint is moved above the Overtemp setpoint, the Overtemp will automatically update to 1.0°C + the temp setpoint. It is recommended that the Overtemp setpoint be 1°C over the temp setpoint.

To set the Overtemp setpoint:

1. Press the Mode key until the Set indicator lights.
2. Press the right arrow until Otemp XX.X is displayed in the message center.
3. Press the up/down arrow until the desired Overtemp setpoint is displayed.
4. Press Enter to save the setpoint.
5. Press the Mode key until the Run Indicator lights to go to run mode or right/left to go to next/previous parameter.

c. Setting the CO_2 Setpoint

All T/C CO_2 cells are precalibrated at the factory at 37°C, high humidity, and 10% CO_2. Therefore, if a temperature setpoint of 37°C has been entered, the humidity pan filled, and the CO_2 control is to run between 0-10% with a T/C CO_2 sensor, the CO_2 setpoint may be entered immediately. Otherwise, it is important to allow the unit 12 hours to stabilize at the temperature setpoint before entering the CO_2 setpoint.

All models of the incubator have a CO_2 setpoint range of 0.0% to 20.0%. The incubator is shipped from the factory with a CO_2 setpoint of 0.0%. At this setting, all CO_2 control and alarms are turned off.

To change the CO_2 setpoint:

1. Press the Mode key until the Set indicator lights.
2. Press the right arrow until CO2 XX.X is displayed in the message center.
3. Press the up/down aroow until the desired CO2 setpoint is displayed.
4. Press Enter to save the setpoint.
5. Press the Mode key until the Run Indicator lights to go to run mode or right/left to go to next/previous parameter.

d. Setting the O_2 Setpoint

Models 3130, 3131, 3140, and 3141 of the incubator have a built-in O_2 control system. The O_2 setpoint range is 2.0% to 21.0%. The incubator is shipped from the factory with a O_2 setpoint of 21.0%. At this setting, all O_2 control and alarms are turned off.

To change the O_2 setpoint:

1. Press the Mode key until the Set indicator lights.
2. Press the right arrow until O2 XX.X is displayed in the message center.
3. Press the up/down arrow until the desired O_2 setpoint is displayed.
4. Press Enter to save the setpoint.
5. Press the Mode key until the Run Indicator lights to go to run mode or right/left to go to next/previous parameter.

Chart 1-1

Set Mode

Press MODE to light SET

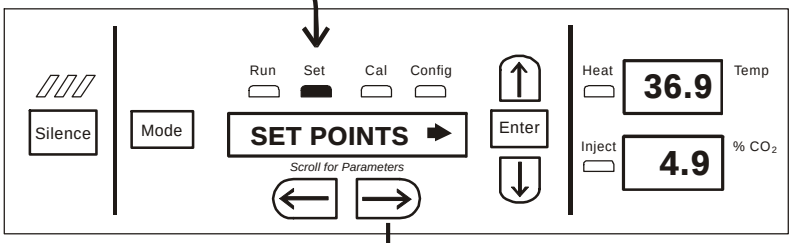

To Set:

Operating Temperature

Press MODE to move to CALIBRATE mode

Mode — TEMP XX.X C — Enter

Scroll for Parameters

Press ← to return to previous parameter

Numbers increase

Press Enter to save setting

Numbers decrease

Over Temperature

Mode — OTEMP XX.X C — Enter

Scroll for Parameters

Press ← to return to previous parameter

Numbers increase

Press Enter to save setting

Numbers decrease

Percent CO_2

Mode — CO2 XX.X% — Enter

Scroll for Parameters

Press ← to return to previous parameter

Numbers increase

Press Enter to save setting

Numbers decrease

Percent O_2
(with O_2 option only)

Mode — O2 XX.X% — Enter

Scroll for Parameters

Press ← to return to previous parameter

Numbers increase

Press Enter to save setting

Numbers decrease

MODES-A2.CDR

Section 2 - Calibration

2.1 Calibration Mode

After the unit has stabilized, several different systems can be calibrated. In the Calibration Mode, the air temperature, CO_2 reading, O_2 reading, and RH reading can all be calibrated to reference instruments. To enter Calibration Mode, press the Mode key until the CAL indicator lights. Press the right and/or left arrow until the proper parameter appears in the message center. See Chart 3-1 for more detail.

Calibration frequency is dependent on use, ambient conditions, and accuracy required. Good laboratory practice would require at least an annual calibration check. On new installations, all parameters should be checked after stabilization periods.

Prior to calibration, the user should be aware of the following system functions. While the unit is in Calibration Mode, all system control functions will be stopped so that the unit remains stable. Readout of the system being calibrated will appear as "—-" on the readout displays. If no keys are pressed for approximately five minutes while in Calibration Mode, the system will reset to Run Mode so that control functions can be reactivated.

Before making an calibration or adjustments to the unit, it is imperative that all reference instruments be properly calibrated.

a. Calibrating the Temperature

Place the calibrated instrument in the center of the chamber. The instrument should be in the airflow, not against the shelf. Before calibration, allow the cabinet temperature to stabilize.

Temperature Stabilization Periods

Start-Up - Allow 12 hours for the temperature in the cabinet to stabilize before proceeding.

Operating Unit -Allow at least two hours after the display reaches setpoint for the temperature to stabilize before proceeding.

1. Press the Mode key until the CAL indicator lights.
2. Press the right arrow until TEMPCAL XX.X appears in the message center.
3. Press the up/down arrow to match the display to a calibrated instrument.
4. Press Enter to store the calibration into memory.
5. Press the Mode key to return to Run, or the right/left arrow to go to the next/previous parameter.

b. Calibrating Thermal Conductivity CO_2 System

Models 3110, 3111, 3130 and 3131 have a thermal conductivity (T/C) CO_2 sensor. Thermal conductivity of the incubator atmosphere is not only effected by the quantity of CO_2 present, but also by the O_2%, the air temperature, and the quantity of water vapor present in the incubator atmosphere. In monitoring the effects of CO_2, O_2%, air temperature, and absolute humidity must be held constant so any change in thermal conductivity is caused only by a change in CO_2 concentration.

Changing temperature or O_2% set points or changing from elevated humidity levels to room ambient humidity levels would necessitate a recalibration of the CO_2 control. Models fitted with the O_2 control option, (Models 3130 and 3131) have an O_2 compensation feature. Refer to the instructions in Section 3.1.s of this manual, for enabling O_2 compensation for T/C systems. When this feature is enabled, the processor will automatically adjust the T/C CO_2 sensor for changes in the O_2 percentage.

New Installation. The CO_2 sensor has been calibrated at the factory for 37°C and elevated humidity. Allow the incubator to run at least 12 hours before checking CO_2 concentration with an independent instrument. If the incubator is operating at 37°C, a zero adjustment is all that is necessary.

1. Press the Mode key until CAL indicator lights.
2. Press the right arrow until CO2ZER0 XX.X is displayed in the message center.
3. Press the up/down arrow to change the display to match the measuring device.
4. Press Enter to store the calibration.
5. Press the Mode key to return to run or right/left arrow to go to next/previous parameter.

If the temperature setpoint is other than 37°, a zero and span adjustment is necessary. Never adjust span without first ensuring the zero is adjusted to ambient CO_2, which is approximately 0% CO_2.

c. Calibrating the T/C %CO2 Zero to Ambient

On models with O_2 control (Models 3130 and 3131), you must disable the O_2 compensation before performing a complete CO2 calibration. Check Section 3.1 Configuration mode, Enabling O_2 Compensation for T/C CO_2 Systems. After completion of the CO_2 calibration, you may return to the Configuration mode and enable the O_2 compensation feature.

T/C CO_2 Sensor Stabilization Periods

Start Up - Set CO_2 set point to 0% (which disables CO_2 valve) or shut CO_2 off at the supply tank. Allow temperature, humidity, and O_2 levels in the chamber to stabilize at least 12 hours before proceeding.

Operating Unit - Set CO_2 set point to 0% (which disables CO_2 valve) or shut off CO_2 at the supply tank. Open both doors and air-out chamber for at least 2 minutes. Close doors and allow temperature, humidity and O_2 levels to stabilize for at least 2 hours before proceeding.

1. Ensure stabilization periods as outlined above are followed.
2. Press the Mode key until the CAL indicator lights.
3. Press the right arrow until CO2 ZERO XX.X is displayed in the message center.
4. Press the up/down arrow to adjust display to 0.0%.
5. Press Enter to store calibration.
6. Press the Mode key to return to Run Mode.

Adjust the CO_2 setpoint to the desired level. Turn on the CO_2 at the supply tank. Allow CO_2 to stabilize at least 15 minutes after CO_2 actual display reaches setpoint. Measure the chamber CO_2 content through the gas sample port with a Fyrite or other independent instrument. Several readings should be taken to ensure accuracy. If the display does not match the independent instrument reading, proceed to the CO_2 span adjustment.

d. Calibrating the T/C %CO_2 Span

To ensure accurate calibration, the unit will not allow CO_2 to be spanned below 3%. If the cabinet does not contain at least 3.0% CO_2, increase the setpoint and allow the unit to stabilize before completing this procedure.

1. Ensure CO_2 zero adjustment has been properly followed before continuing.
2. Press the Mode key until the CAL indicator lights.
3. Press the right arrow until CO2SPAN XX.X appears in the message center.
4. Press the up/down arrow to adjust the display to match the independent instrument reading.
5. Press Enter to store the calibration.
6. Press the Mode key to return to Run Mode.

e. Calibrating the Infra-Red CO2 System.

Models 3120, 3121, 3140 and 3141 have an infra-red CO_2 sensor. Infra-red CO_2 sensors are not effected by chamber atmosphere temperature, humidity and O_2 variations. However, the light detector in the sensor is effected by wide temperature changes. Therefore, changing temperature setpoints could necessitate a recalibration of the CO_2. Chamber temperature should be allowed to stabilize before checking CO_2 concentrations with an independent instrument, especially on start-up.

All models equipped with an IR/CO_2 sensor have an automatic calibration that occurs every 24 hours, and lasts for 5 to 6 minutes. During automatic calibration, the CO_2 display is blanked out and HEPA filtered room air is pumped through the CO2 sensor. A new CO_2 calibration value is stored in memory for use as the 0.0% CO_2 reference point. The keypad/ control panel is “locked up” during calibration, with the message center reading CO_2 AUTO CAL.

IR CO_2 Sensor Stabilization Times

Startup- Allow the temperature and the CO_2 of the cabinet to stabilize at least 12 hours before proceeding.

Operating Unit - Allow CO_2 to stabilize at least 2 hours at set point before proceeding.

To ensure accurate calibration, the unit will not allow CO_2 to be spanned below 3%. If the cabinet does not contain at least 3.0% CO_2, increase the setpoint and allow the unit to stabilize before completing this procedure.

1. Measure the CO_2 concentration in the chamber through the gas sample port with a Fyrite or other independent instrument. Several readings should be taken to ensure accuracy.
2. Press the Mode key until the CAL indicator lights.
3. Press the right arrow until IR CAL XX.X appears in the message center.
4. Press the up/down arrow to adjust the display to match the independent instrument reading.
5. Press Enter to store calibration.
6. After Enter is pressed, the unit will go into a calibration cycle that will last 5 to 6 minutes. The control panel is “locked up” during this calibration cycle.
7. Press the Mode key to return to Run Mode.

f. Calibrating the O_2 system

If using an O_2 Fyrite, the accuracy of the instrument will be greatly affected by the concentration of CO_2 in the cabinet. Refer to the Fyrite operating manual.

Models 3130, 3131, 3140 and 3141 have an O_2 control sensor. The sensor is a fuel cell that puts out a linear millivolt signal based on O_2 content of the chamber. The fuel cell depletes over time depending on O_2 levels. The above models have an automatic calibration to maintain the O_2 calibration as the fuel cell depletes. The automatic calibration occurs every 12 hours and lasts 1 to 3 minutes. During automatic calibration, the O_2 display is locked on the existing O_2 reading and HEPA filtered room air is pumped through the O_2 sensor.

A new O_2 span value is stored in memory for use as the 20.7% O_2 reference point. The keypad/control panel is "locked-up" during automatic calibration.

O_2 Sensor Stabilization Times

Startup - Allow the cabinet to stabilize at least 12 hours before proceeding.

Operating Unit - Allow O_2 to stabilize at least 2 hours at set point before proceeding.

Measure the O_2 concentration in the chamber through the gas sample port with an independent instrument. Several readings should be taken to ensure accuracy.

1. Press the Mode key until the CAL indicator lights.
2. Press the right arrow until O2 CAL XX.X appears in the message center.
3. Press the up/downarrow to adjust display to independent instrument reading.
4. Press Enter to store calibration.
5. Press the Mode key to return to Run Mode.

g. Calibrating Relative Humidity

All 3110 Series incubators can be equipped with an optional direct readout relative humidity sensor. This is a readout only of the chamber relative humidity. It does not provide any control of the relative humidity in the cabinet.

Relative Humidity Stabilization Times

Startup - Allow 12 hours for the relative humidity and temperature in the chamber to stabilize before proceeding.

Operating Unit - Allow at least 2 hours after temperature display reaches set point for relative humidity to stabilize before proceeding.

1. Place an accurate independent instrument in the center of the chamber. Allow at least 30 minutes for RH to stabilize.
2. Press the Mode key until the CAL indicator lights.
3. Press the right arrow key until RH CAL XX appears in the message center.
4. Press the up/down arrow to match the display to the independent instrument.
5. Press Enter to store the calibration.
6. Press the Mode key to return to Run Mode.

If a reliable RH measuring device is not available, you may calibrate the display to a typical level. On units with O_2 control, the nitrogen must be shut off as the incoming nitrogen lowers the optimum achievable level of RH in the chamber. Follow the RH stabilization periods outlined above. With a full humidity pan and stable temperature, the relative humidity in the chamber will be 95%. In step 5 of the relative humidity sensor adjustment, you may adjust the display to 95%. This calibration method should be accurate to within 5%.

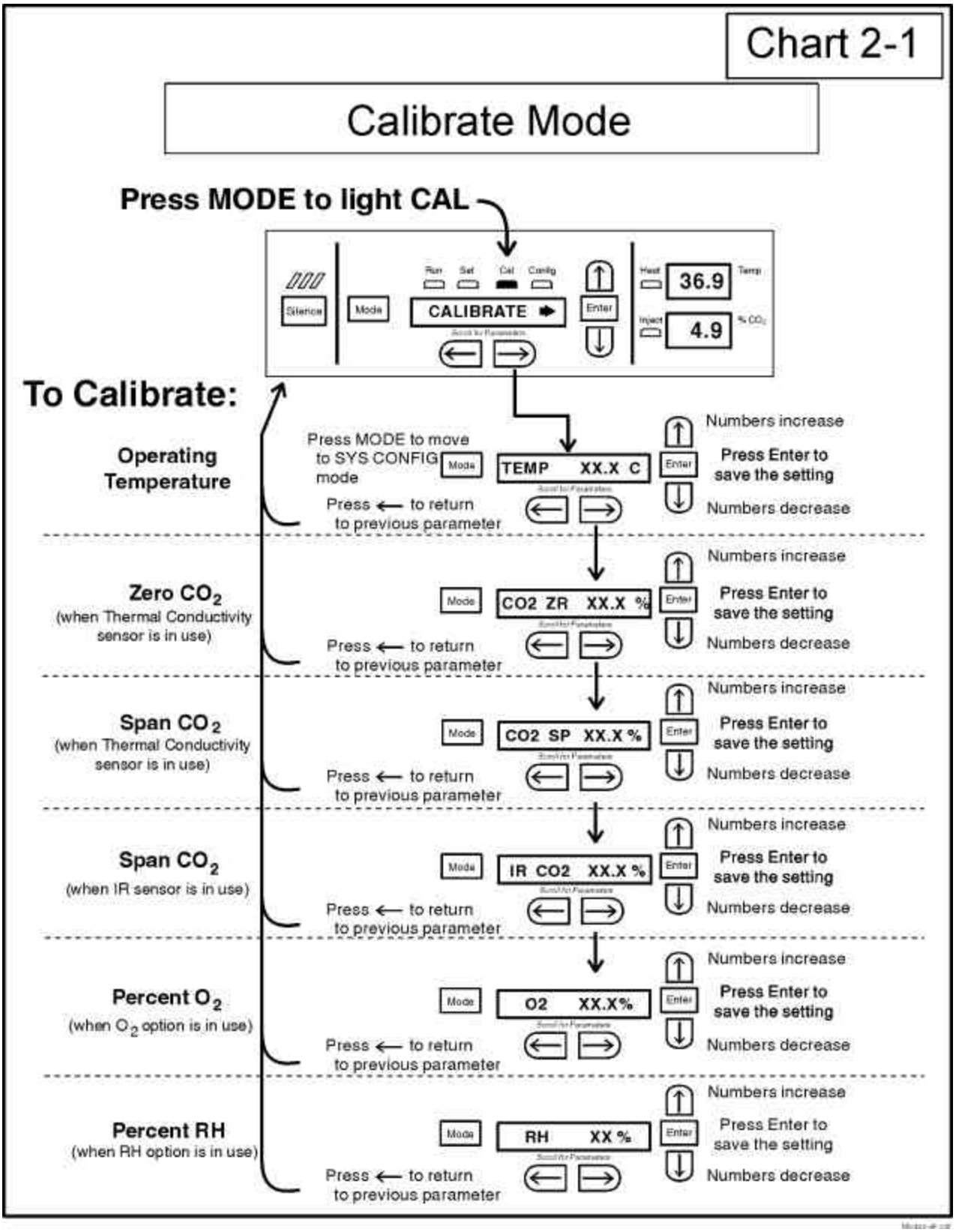
Chart 2-1
Calibrate Mode
Press MODE to light CAL
Run
Set
Cal
Config
Silence
Mode
CALIBRATE
Enter
Heat
36.9
Temp
Inject
4.9
% CO2
To Calibrate:
Operating Temperature
Press MODE to move to SYS CONFIG mode
Mode
TEMP XX.X C
Enter
Numbers increase
Press Enter to save the setting
Numbers decrease
Press ← to return to previous parameter
Zero CO2
(when Thermal Conductivity sensor is in use)
CO2 ZR XX.X %
Span CO2
(when Thermal Conductivity sensor is in use)
CO2 SP XX.X %
Span CO2
(when IR sensor is in use)
IR CO2 XX.X %
Percent O2
(when O2 option is in use)
O2 XX.X%
Percent RH
(when RH option is in use)
RH XX %

Section 3 - Configuration

3.1 Configuration Mode

There are many features available in Configuration Mode that allow custom setup of the incubator. These features are listed and described below. All features may not be necessary in all applications, but are available if needed. To enter Configuration Mode, press the Mode key until the Config indicator lights. Press the right or left arrow until the appropriate parameter appears in the message center. See Chart 3-1 for more detail.

a. Turning the Audible Alarm ON/OFF

The audible alarm can be turned on or off. The factory setting is ON.

1. Press the Mode key until the Config indicator lights.
2. Press the right arrow until Audible XXX is displayed in the message center.
3. Press the up/down arrow to toggle Audible ON/OFF.
4. Press Enter to save the setting.
5. Press the Mode key to return to Run Mode or right/left to go to next/previous parameter.

b. Setting an Access Code

A three-digit Access Code can be entered to avoid unauthorized personnel from changing the setpoints, calibration, or configuration. A setting of 000 will bypass the access code. The factory setting is 000.

1. Press the Mode key until the Config indicator lights.
2. Press the right arrow until Acc Code XXX is displayed in the message center.
3. Press the up/down arrow to change the access code.
4. Press Enter to save the access code.
5. Press the Mode key to return to Run Mode or right/left to go to next/previous parameter.

c. Setting a Low Temp Alarm Limit (tracking alarm)

The low temp alarm limit is the deviation from the temperature setpoint, which will cause a low temp alarm. The low temp alarm is variable from 0.5° below setpoint to 5.0° below setpoint. The factory setting is 1.0° below setpoint. A minus sign (-) in the display indicates that the alarm setting is below the setpoint.

1. Press the Mode key until the Config indicator lights.
2. Press the right arrow until Temp Lo -X.X is displayed in the message center.
3. Press the up/down arrow to change the low temp alarm limit.
4. Press Enter to save the low temp alarm limit.
5. Press the Mode key to return to Run mode or right/left to go to next/previous parameter.

d. Setting a High Temp Alarm Limit (tracking alarm)

The high temp alarm limit is the deviation from the temperature setpoint that will cause a high temp alarm. It should be noted that this varies from the Overtemp setpoint, in that the Overtemp setpoint configures an independent system that monitors temperature and shuts down the system heaters if necessary. The high temp alarm limit is simply set to enable an audible and visual alarm that notifies the user of a problem. The high temp alarm is variable from 0.5° above setpoint to 5.0° above setpoint. The factory setting is 1.0° above setpoint.

1. Press the Mode key until the Config indicator lights.
2. Press the right arrow until Temp Hi X.X is displayed in the message center.
3. Press the up/down arrow to change the high temp alarm limit.
4. Press Enter to save the high temp alarm limit.
5. Press the Mode key to return to Run Mode or right/left to go to next/previous parameter.

e. Enabling Temperature Alarms to Trip Contacts

High and Low temperature alarms can be programmed to trip the remote alarm contacts. A setting of ON will cause this, a setting of OFF will not allow temp alarms to trip the contacts. The factory setting is ON.

1. Press the Mode key until the Config indicator lights.
2. Press the right arrow until Tmp Rly XXX is displayed in the message center.
3. Press the up/down arrow to toggle the setting ON/OFF.
4. Press Enter to save the setting
5. Press the Mode key to return to Run Mode or right/left to go to next/previous parameter.

f. Setting Low CO_2 Alarm Limit (tracking alarm)

The low CO_2 alarm limit is the deviation from the CO_2 setpoint that will cause a low CO_2 alarm. The setpoint is variable from 0.5% CO_2 below setpoint to 5.0% CO_2 below setpoint. The factory setting is 1.0% CO_2 below setpoint. A minus (-) in the display indicates that the alarm setting is below the setpoint.

1. Press the Mode Key until the Config indicator lights.
2. Press the right arrow until CO2 Lo -X.X is displayed in the message center.
3. Press the up/down arrow to change the low CO_2 alarm limit.
4. Press Enter to save the low CO_2 alarm limit.
5. Press the Mode key to return to Run Mode or right/left to go to next/previous parameter.

g. Setting High CO_2 Alarm Limit (tracking alarm)

The high CO_2 alarm limit is the deviation from the CO_2 setpoint that will cause a high CO_2 alarm. The setpoint is variable from 0.5% CO_2 above setpoint to 5.0% CO_2 above setpoint. The factory setting is 1.0% CO_2 above setpoint.

1. Press the Mode key until the Config indicator lights.
2. Press the right arrow until CO2 Hi X.X is displayed in the message center.
3. Press the up/down arrow to change the high CO_2 alarm limit.
4. Press Enter to save the high CO_2 alarm limit.
5. Press the Mode key to return to Run Mode or right/left to go to next/previous parameter.

h. Enabling CO_2 Alarms to Trip Contacts

High and Low CO_2 alarms can be programmed to trip the remote alarm contacts. A setting of ON will cause this; a setting of OFF will not allow CO_2 alarms to trip the contacts. The factory setting is ON.

1. Press the Mode key until the Config indicator lights.
2. Press the right arrow until CO2 Rly XXX is displayed in the message center.
3. Press the up/down arrow to toggle the setting ON/OFF.
4. Press Enter to save the setting.
5. Press the Mode key to return to Run Mode or right/left to go to next/previous parameter.

i. Setting New Zero Number for T/C CO_2 Sensors

If a new T/C CO_2 sensor is being installed, the two numbers on the factory installed sticker on the T/C cell must be entered to calibrate the CO_2 in the unit.

Note: For the technician's convenience, a label containing the two numbers on the T/C cell is affixed inside the electronics drawer.

1. Press the Mode key until the Config indicator lights.
2. Press the right arrow until T/CZ# XXXX is displayed in the message center.
3. Press the up/down arrow to change the zero number to match the sticker.
4. Press Enter to save the setting.
5. Press the Mode key to return to Run Mode or right/left to go to next/previous parameter.

j. Setting New Span Number for T/C CO2 Sensors

If a new T/C CO_2 sensor is being installed, the two numbers on the factory installed sticker on the T/C cell must be entered to calibrate the CO_2 in the unit.

NOTE: For the technician's convenience, a label containing the two numbers on the T/C cell is affixed inside the electronics drawer.

1. Press the Mode key until the Config indicator lights.
2. Press the right arrow until T/CS# XXXX is displayed in the message center.
3. Press the up/down arrow to change the span number to match the sticker.
4. Press Enter to save the setting.
5. Press the Mode key to return to Run Mode or right/left to go to next/previous parameter.

k. Setting a Low RH Alarm Limit

On units that have the RH option installed, a low RH alarm limit may be entered. The low RH alarm limit is the %RH in the cabinet that will cause a low RH alarm. The setpoint is variable from setpoint 0 to 90 %RH. The factory setting is 0% RH, which will disable the alarm.

1. Press the Mode key until the Config indicator lights.
2. Press the right arrow until RH Lo XX is displayed in the message center.
3. Press the up/down arrow to change the RH low alarm limit.
4. Press Enter to save the RH low alarm limit.
5. Press the Mode key to return to Run Mode or right/left to go to next/previous parameter.

l. Enabling RH Alarms to Trip Contacts

The low RH alarm can be programmed to trip the remote alarm contacts. A setting of ON will cause this, a setting of OFF will not allow the RH alarm to trip the contacts. The factory setting is ON.

1. Press the Mode key until the Config indicator lights.
2. Press the right arrow until RH Rly XXX is displayed in the message center.
3. Press the up/down arrow to toggle the setting ON/OFF.
4. Press Enter to save the setting.
5. Press the Mode key to return to Run Mode or right/left to go to next/previous parameter.

m. New O_2 Cell

On models equipped with the O_2 control option, the unit's microprocessor monitors the life of the O_2 sensor. When the O_2 sensor needs replaced, an alarm will sound and the message REPL O2 SNSR will be displayed. Once a new O_2 sensor is installed, this menu will allow it to be automatically calibrated.

To perform the automatic calibration:

1. Press the Mode key until the Config indicator lights.
2. Press the right arrow until NEW O2 CELL is displayed in the message center.
3. Press Enter to start calibration.
4. Calibration will take 3-5 minutes. Once completed, press the Mode key to return to Run Mode.

n. Setting a Low O_2 Alarm Limit (tracking alarm)

On models with a O_2 control system, O_2 alarms may be configured. The low O_2 alarm limit is the deviation from the O_2 setpoint that will cause a low O_2 alarm. The setpoint is variable from 0.5% O_2 below setpoint to 5.0% O_2 below setpoint. The factory setting is 1.0% O_2 below setpoint. A minus (-) in the display indicates that the alarm setting is below setpoint.

1. Press the Mode key until the Config indicator lights.
2. Press the right arrow until O2 Lo -X.X is displayed in the message center.
3. Press the up/down arrow to change the low O_2 alarm limit.
4. Press Enter to save the low O_2 alarm limit.
5. Press the Mode key to return to Run Mode or right/left to go to next/previous parameter.

o. Setting a High O_2 Alarm Limit (tracking alarm)

On models with a O_2 control system, O_2 alarms may be configured. The high O_2 alarm limit is the deviation from the O_2 setpoint that will cause a high O_2 alarm. The setpoint is variable from 0.5% O_2 above setpoint to 5.0% O_2 above setpoint. The factory setting is 1.0% O_2 above setpoint.

1. Press the Mode key until the Config indicator lights.
2. Press the right arrow until O2 Hi X.X is displayed in the message center.
3. Press the up/down arrow to change the high O_2 alarm limit.
4. Press Enter to save the high O_2 alarm limit.
5. Press the Mode key to return to Run Mode or right/left to go to next/previous parameter.

p. Enabling O_2 Alarms to Trip Contacts

On models with an O_2 control system, O_2 alarm contacts may be configured to trip the contacts. A setting of ON will cause this, a setting of OFF will not allow O_2 alarms to trip the contacts. The factory setting is ON.

1. Press the Mode key until the Config indicator lights.
2. Press the right arrow until O2 Rly XXX is displayed in the message center.
3. Press the up/down arrow to toggle the setting ON/OFF.
4. Press Enter to save the setting.
5. Press the Mode key to return to Run mode or right/left to go to next/previous parameter.

q. Enabling Temp/RH to be Displayed

On units that are equipped with the RH option, the upper seven-segment display on the control panel can be configured to display Temp continuously, RH continuously, or toggle between Temp and RH. If the units does not have RH, the upper display will always display temperature. If temperature is set to ON and the RH is set OFF, temperature will be displayed continuously. If temperature is set to OFF and RH is set to ON, RH will be displayed continuously. If both are turned ON, the display will toggle between the two. The factory setting will default to toggle mode if the RH option is present.

1. Press the Mode key until the Config indicator lights.
2. Press the right arrow until Disp Tmp XXX or Disp RH XXX is displayed in the message center.
3. Press the up/down arrow to toggle the setting ON/OFF.
4. Press Enter to save the setting.
5. Press the Mode key to return to Run mode or right/left to go to next/previous parameter.

r. Enabling CO_2/O_2 to be Displayed

On models that are equipped with the O_2 system, the lower seven-segment display on the control panel can be configured to display CO_2 continuously, O_2 continuously, or toggle between CO_2 and O_2. If the units does not have O_2, the lower display will always display CO_2. If CO_2 is set to ON and the O_2 is set OFF, CO_2 will be displayed continuously. If CO_2 is set to OFF and O_2 is set to ON, O_2 will be displayed continuously. If both are turned ON, the display will toggle between the two. The factory setting will default to toggle mode if the O_2 system is present.

1. Press the Mode key until the Config indicator lights.
2. Press the right arrow until Disp CO2 XXX or Disp O2 XXX is displayed in the message center.
3. Press the up/down arrow to toggle the setpoint.
4. Press Enter to save the setpoint.
5. Press the Mode key to return to Run mode or right/left to go to next/previous parameter.

s. Enabling O2 Compensation for T/C CO_2 Systems

On models that have T/C CO_2 control and a O_2 control system, the T/C CO_2 reading is susceptible to O_2 levels in the chamber. The incubator is capable of compensating the CO_2 display for the varying O_2 level. A setting of ON will allow such compensation. The factory setting is OFF.

1. Press the Mode key until the Config indicator lights.
2. Press the right arrow until O2 Comp XXX is displayed in the message center.
3. Press the up/down arrow to toggle the setting ON/OFF.
4. Press Enter to save the setting.
5. Press the Mode key to return to Run mode or right/left to go to next/previous parameter.

t. Setting a RS485 Communications Address (1535 compatible only)

On units that have the RS485 option, direct communication with the Forma 1535 Model alarm system can be established. Each piece of equipment connected to the 1535 must have a unique address. An address of 0-24 can be entered for the incubator. A setting of 0 is an invalid address that the 1535 will ignore. The factory setting for the RS485 address is 0.

1. Press the Mode key until the Config indicator lights.
2. Press the right arrow until RS485 XX is displayed in the message center.
3. Press the up/down arrow to move the RS485 address.
4. Press Enter to save the RS485 address.
5. Press the Mode key to return to Run mode or right/left to go to next/previous parameter.

u. Selecting a Primary Tank with the Gas Guard Option

On units equipped with the Gas Guard option, a primary tank can be selected. The primary tank will be either Tank 1 or Tank 2. The factory setting is Tank 1.

1. Press the Mode key until the Config indicator lights.
2. Press the right arrow until Tnk Sel X is displayed in the message center.
3. Press the up/down arrow to toggle the setting between 1 and 2 .
4. Press Enter to save the setting.
5. Press the Mode key to return to Run mode or right/left to go to next/previous parameter.

v. Enabling the Gas Guard System

On units equipped with the Gas Guard option, the Gas Guard system may be turned ON or OFF if it is not in use. The factory setting is OFF.

1. Press the Mode key until the Config indicator lights.
2. Press the right arrow until Gas Grd XX is displayed in the message center.
3. Press the up/down arrow to toggle the setting ON/OFF.
4. Press Enter to save the setting.
5. Press the Mode key to return to Run mode or right/left to go to next/previous parameter.

w. Setting the Door Heat

The incubator is equipped with a built-in heater on the inner glass door. The percentage of time that power is applied to this heater as compared to the main heater can be varied from 0 to 99%. The factory setting is 50%. Changing this setting can affect the unit's temperature control and uniformity. Consult the factory before changing this setting.

1. Press the Mode key until the Config indicator lights.
2. Press the right arrow until Dr Heat XX is displayed in the message center.
3. Press the up/down arrow to move the door heat setpoint.
4. Press Enter to save the door heat setpoint.
5. Press the Mode key to return to Run mode or right/left to go to next/previous parameter.

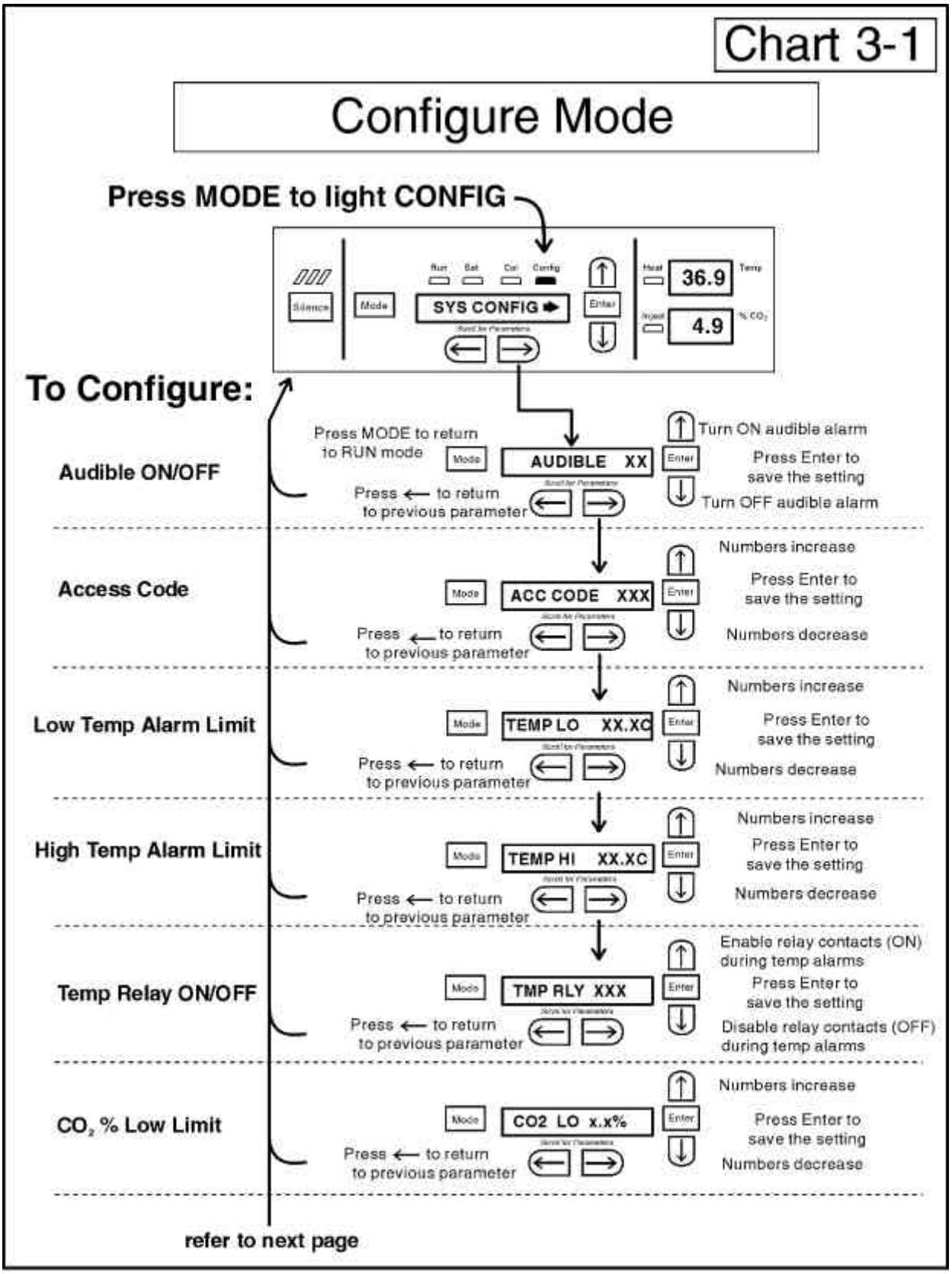
Chart 3-1
Configure Mode
Press MODE to light CONFIG
Run
Bat
Cal
Config
Silence
Mode
SYS CONFIG
Enter
Heat
36.9
Temp
Inject
4.9
% CO2
To Configure:
Audible ON/OFF
Press MODE to return to RUN mode
Mode
AUDIBLE XX
Enter
Turn ON audible alarm
Press Enter to save the setting
Turn OFF audible alarm
Press ← to return to previous parameter
Access Code
ACC CODE XXX
Numbers increase
Press Enter to save the setting
Numbers decrease
Press ← to return to previous parameter
Low Temp Alarm Limit
TEMP LO XX.XC
Numbers increase
Press Enter to save the setting
Numbers decrease
Press ← to return to previous parameter
High Temp Alarm Limit
TEMP HI XX.XC
Numbers increase
Press Enter to save the setting
Numbers decrease
Press ← to return to previous parameter
Temp Relay ON/OFF
TMP RLY XXX
Enable relay contacts (ON) during temp alarms
Press Enter to save the setting
Disable relay contacts (OFF) during temp alarms
Press ← to return to previous parameter
CO2 % Low Limit
CO2 LO x.x%
Numbers increase
Press Enter to save the setting
Numbers decrease
Press ← to return to previous parameter
refer to next page
3-1p1.cdr

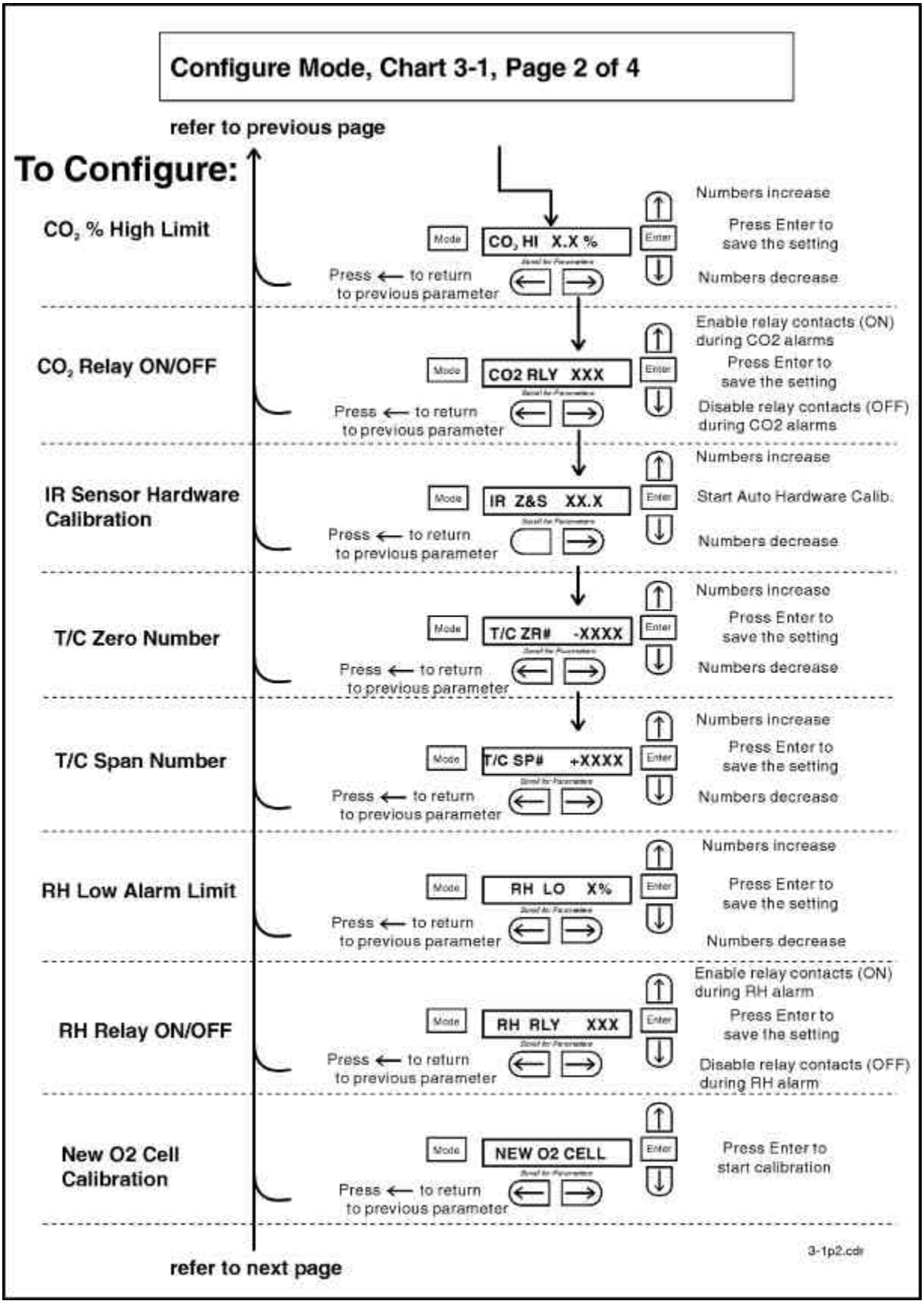
Configure Mode, Chart 3-1, Page 2 of 4
refer to previous page
To Configure:
CO2 % High Limit
Mode
CO2 HI X.X %
Enter
Numbers increase
Press Enter to save the setting
Numbers decrease
Press ← to return to previous parameter
CO2 Relay ON/OFF
CO2 RLY XXX
Enable relay contacts (ON) during CO2 alarms
Press Enter to save the setting
Disable relay contacts (OFF) during CO2 alarms
IR Sensor Hardware Calibration
IR Z&S XX.X
Start Auto Hardware Calib.
T/C Zero Number
T/C ZR# -XXXX
T/C Span Number
T/C SP# +XXXX
RH Low Alarm Limit
RH LO X%
RH Relay ON/OFF
RH RLY XXX
Enable relay contacts (ON) during RH alarm
Disable relay contacts (OFF) during RH alarm
New O2 Cell Calibration
NEW O2 CELL
Press Enter to start calibration
3-1p2.cdr
refer to next page

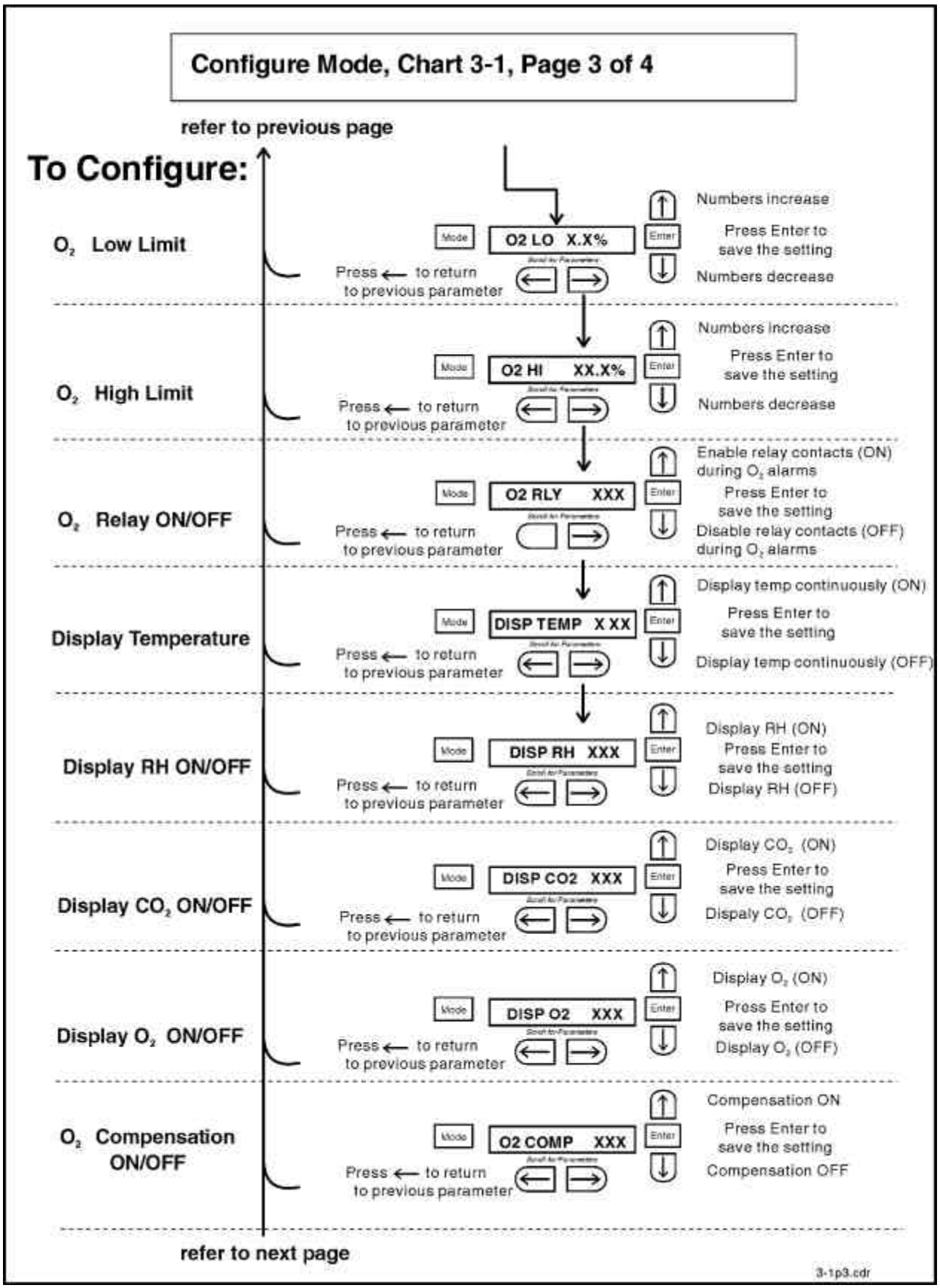
Configure Mode, Chart 3-1, Page 3 of 4
refer to previous page
To Configure:
O2 Low Limit
Mode
O2 LO X.X%
Enter
Numbers increase
Press Enter to save the setting
Numbers decrease
Press ← to return to previous parameter
O2 High Limit
O2 HI XX.X%
O2 Relay ON/OFF
O2 RLY XXX
Enable relay contacts (ON) during O2 alarms
Disable relay contacts (OFF) during O2 alarms
Display Temperature
DISP TEMP X XX
Display temp continuously (ON)
Display temp continuously (OFF)
Display RH ON/OFF
DISP RH XXX
Display RH (ON)
Display RH (OFF)
Display CO2 ON/OFF
DISP CO2 XXX
Display CO2 (ON)
Dispaly CO2 (OFF)
Display O2 ON/OFF
DISP O2 XXX
Display O2 (ON)
Display O2 (OFF)
O2 Compensation ON/OFF
O2 COMP XXX
Compensation ON
Compensation OFF
refer to next page
3-1p3.cdr

Configure Mode, Chart 3-1, Page 4 of 4

refer to previous page

To Configure:

RS485

Mode | RS 485 XX | Enter

Press ← to return to previous parameter

Numbers increase

Press Enter to save the setting

Numbers decrease

Tank Select

Mode | TANK SEL X | Enter

Press ← to return to previous parameter

Tank 1 prime

Press Enter to save the setting

Tank 2 prime

Gas Guard ON/OFF

Mode | GAS GRD XXX | Enter

Press ← to return to previous parameter

Numbers increase

Press Enter to save the setting

Numbers decrease

Percent Door Heat

Mode | DR HEAT XX% | Enter

Press ← to return to previous parameter

Numbers increase

Press Enter to save the setting

Numbers decrease

Section 4 - Alarms

4.1 Alarms

The Model 3110 Series incubator alarm system is shown in the table below. When an alarm is active, the message appears in the LED message center. Pressing Silence disables the audible alarm for the ringback period. However, the visual alarm continues until the incubator returns to a normal condition. The alarms are momentary alarms only. When an alarm condition occurs and then returns to normal, the incubator automatically clears the alarm condition and the message center.

Description	Message	Delay	Ringback	Relay
No alarm condition exists	CLASS 100	-----	-----	-----
CO_2 System Auto Calibrating	CO2 AUTO CAL	-----	-----	-----
Temp > Otemp Setpoint	SYS IN OTEMP	0 min.	15 min.	Yes
Water Temp Sensor Fault (See Sect 4.2)	H2O SENS ERR	0 min.	15 min.	No
Air Temp Sensor Fault (See Sect 4.2)	AIR SENS ERR	0 min.	15 min.	No
CO_2 Sensor Fault (See Sect 4.5)	CO2 SENS ERR	0 min.	15 min.	No
O_2 Sensor Fault (O_2 option only) (See Sect 4.2)	O2 SENS ERR	0 min.	15 min.	No
O_2 Sensor Low (O_2 option only) (See Sect 4.3)	REPL O2 SNSR	15 min.	15 min.	No
CO_2 Sensor cannot be calibrated (IR option only) (See Sect. 4.4)	REPL IR SENSR	0 min.	15 min.	No
Water low in jacket	ADD WATER	0 min.	15 min.	No
Inner Door is Open	DOOR OPEN	15 min.	15 min.	No
CO_2 > CO_2 High Tracking Alarm	CO2 IS HIGH	15 min.	15 min.	Programmable
CO_2 < CO_2 Low Tracking Alarm	CO2 IS LOW	15 min.	15 min.	↓
TEMP > TEMP High Tracking Alarm	TEMP IS HIGH	0 min.	15 min.	Programmable
TEMP < TEMP Low Tracking Alarm	TEMP IS LOW	15 min.	15 min.	↓
O_2 > O_2 High Tracking Alarm (O2 option only)	O2 IS HIGH	15 min.	15 min.	Programmable
O_2 < O_2 Low Tracking Alarm (O2 option only)	O2 IS LOW	15 min.	15 min.	↓
RH < RH Low Limit Alarm (RH option only)	RH IS LOW	30 min.	30 min.	Programmable
O_2 Auto-Zero Fault (See Sect 4.2)	O2 AUTOZ ERR	0 min.	15 min.	No
CO_2 Auto-Zero Fault (IR option only) (See Sect 4.6)	IR AUTOZ ERR	0 min.	15 min.	No
Tank 1 is low, switch to Tank 2 (Gas Guard only)	TANK1 LOW	0 min.	----	No
Tank 2 is low, switch to Tank 1 (Gas Guard only)	TANK2 LOW	0 min.	----	No
Both tanks are low (Gas Guard only)	TANK 1 and 2 LOW	0 min.	15 min.	No

- All alarm delays and ringback times are +/- 30 seconds -

When multiple alarm conditions occur, active messages are displayed in the message center one at a time, updating at 5 second intervals. Pressing Silence during multiple alarms causes all active alarms to be silenced and to ringback in 15 minutes.

The temperature alarms are disabled when the Temp setpoint is 10°C. The CO_2 alarms are disabled when the CO_2 setpoint is 0.0%. The O_2 alarms are disabled when the O_2 setpoint is 21.0%.

4.2 Sensor Fault Alarms

The microprocessor in all 3110 Series incubators continually scans all available sensors including the pump on O_2 units to ensure that they are operating properly. Should an error be detected, the incubator will sound an alarm and display the appropriate message. If such an alarm occurs, contact your local distributor or the Forma Scientific Service department at 740-373-4763 or 1-888-213-1790 (USA and Canada) or fax 740-373-4189.

4.3 REPL O2 SNSR (Alarm)

On units equipped with the O_2 system, the microprocessor continually checks the remaining life of the O_2 sensor. If the O_2 sensor functionality is declining, the REPL O2 SNSR alarm will sound. This alarm alerts the user of the need to replace the O_2 sensor at the earliest convenience. The unit will continue to function for some length of time. To order a new sensor, contact your local distributor or the Forma Scientific Service department at 740-373-4763 or 1-888-213-1790 (USA and Canada) or fax 740-373-4189.

After the O_2 sensor is replaced, see Section New O_2 Cell, Section 3.1.m on page 3-5 of this manual for calibrating the O2 system.

4.4 REPL IR SNSR (Alarm)

On units equipped with an IR CO_2 control system, calibration is done automatically using an Auto Zero system. If this system cannot properly calibrate the sensor, the REPL IR SNSR alarm will sound. The unit will continue to function for some length of time. To order a new sensor, contact your local distributor or the Forma Scientific service department at 740-373-4763 or 1-888-213-1790 (USA and Canada) or fax 740-373-4189.

4.5 CO2 SNSR ERR

If the cables or connectors between the main microprocessor board and the CO_2 sensor, or between the CO_2 board and the sensor head on I/R CO_2 units become loose or disconnected, the CO2 SENS ERR alarm will occur.

I/R Units

On I/R incubators, the red light on the I/R module (Refer to Figure 5-4 for the location of the module circuit board) will be lit continuously if communication is lost between the CO_2 board and the sensor head. The CO_2 display will also be locked at 00.0 without injection. Turning the incubator off and on will not clear the alarm. Only proper connections of all the components will correct the alarm.

4.6 IR AUTOZ ERR

On incubators equipped with I/R CO_2 control, calibration is done automatically using an Auto Zero system. Auto Zero occurs once every 24 hours. If, during the Auto Zero cycle, a CO_2 correction of more than 0.45% is detected, the IR AUTOZ ERR alarm will occur.

Possible problems which will cause this alarm are:

- Auto Zero pump, orifice, filter or tubing will not allow air to the sensor.

  Possibilities are:

  Defective or electrically disconnected air pump

  Kinked auto zero vinyl tubing

  Disconnected tubing between air pump and sensor

  Plugged filter or orifice on auto zero assembly

  Defective auto zero circuit
- Cabinet temperature has been increased significantly from a previous setpoint. (For example, the unit was calibrated and operating at 30°C and the setpoint is increased to 50°C) In this instance, calibrating the CO_2 will correct the alarm.
- There is high background CO_2 in the laboratory. This could be from leaks in the tank, regulator or vinyl CO_2 tubing.
- High CO_2 sensor calibration drift occurred. This will require replacement of the sensor.

Section 5: Routine Maintenance

Before using any cleaning or decontamination method except those recommended by the manufacturer, users must check with the manufacturer that the proposed method will not damage the equipment.

5.1 Disinfecting the Incubator Interior

If the units have been in service, disconnect the power cord connector before disinfecting.

Use an appropriate disinfectant. All articles and surfaces to be disinfected must be thoroughly cleaned, rinsed and rough-dried.

Alcohol, even a 70% solution, is volatile and flammable Use it only in a well ventilated area that is free from open flame. If any component is cleaned with alcohol, do not expose the component to open flame or other possible hazard. Allow the alcohol to fully dry before turning power on.

Do not spray the T/C sensor with flammable solutions. The internal temperature of the CO_2 sensor is approximately 150°C when the unit is in operation. Allow sufficient time for the sensor to cool before cleaning.

Do not use strong alkaline or caustic agents. Stainless steel is corrosion resistant, not corrosion proof. Do not use solutions of sodium hypochlorite (bleach), as they may also cause pitting and rusting.

1. Turn off the incubator power switch and unplug the power cord.
2. Remove the shelves, HEPA filter, access port stopper, left and right duct sheets, and the top duct. The top duct requires the two wing nuts to be removed.
3. Set the HEPA filter aside. Wash the shelves, ducts, wingnuts and stopper with disinfectant and rinse with sterile water. Option: Autoclave shelves, ducts and wingnuts.
4. Remove the blower scroll by first pushing the white lever clip closest to you toward the scroll. Then turn the scroll to the left to disengage it from the top plate. Some manipulation may be required as the alignment holes are keyhole-shaped.
5. Remove the blower wheel by pulling down firmly on the wheel. Remove the sample port filter. If a new blower wheel and scroll are going to be used, discard the old ones. If the old ones are being reused, wash all parts with disinfectant and rinse with sterile water.
6. Wash the cabinet interior with disinfectant starting at the top and working down. Wash the inner door both inside and out. The cabinet and door must be rinsed with sterile water until the disinfectant has been removed. After the cabinet has been rinsed, spray with 70% alcohol.
7. Install the blower wheel and scroll. Make sure the wheel turns freely. Align and turn the scroll to the right to lock it into the keyholes. Pull the white lever clip toward you, away from the scroll. Install the sample filter.
8. Install the top duct, left and right ducts, and access port stopper, spraying each with 70% alcohol.
9. Install the HEPA Filter
10. Install the shelves and spray with 70% alcohol.
11. Allow the unit to run empty for 24 hours before returning to service.

5.2 Cleaning the Cabinet Exterior

Clean the incubator exterior with a damp sponge or soft, well-wrung cloth and mild detergent dissolved in water. Dry with a soft cloth.

5.3 Cleaning the Humidity Pan

Clean the humidity pan with soap and water and a general use laboratory disinfectant. Rinse with sterile water and spray with 70% alcohol. The humidity pan may be autoclaved.

5.4 Reversing the Door Swing

For side-by-side operation or changing lab layouts, the inner and outer doors are field reversible. The procedure is written from the prospective of changing the door swing from a left-hand to a right-hand swing. All screw holes are pre-drilled for reversing the door. The tools required are a Phillips and a flatblade screwdriver.

If the units have been in service, disconnect the power cord connector before reversing the door swing.

a. Reversing the Hinges for the Exterior Door

Review Illustration A on Page 5-4. The following instructions will refer to the letters within the circles.

1. Open the outer door and remove it by lifting it off its hinge pins. Lay this door down on its face on a padded surface to prevent scratches.
2. Remove the two outer door hinges identified by the “A” in the illustration.
3. Remove the four nylon screws in locations “B”, which will be the new locations for the inner door hinges.
4. With the Phillips screwdriver, remove and save the four nylon screws from the outer door hinge mounting holes, noted as locations “C” on the right side of the door frame.
5. Remove the electrical connector on the top of the inner door hinge by carefully prying up the black strain relief. Refer to item “D” in the illustration and the drawing in Figure 5-1. The heater wiring connector is of yellow rubber which should be visible when the strain relief is moved upward as shown. Refer to the connector manufacturer’s instructions in Appendix A of this manual.
6. Grasp the upper portion of the yellow connector and pull it up and out of the hinge socket.

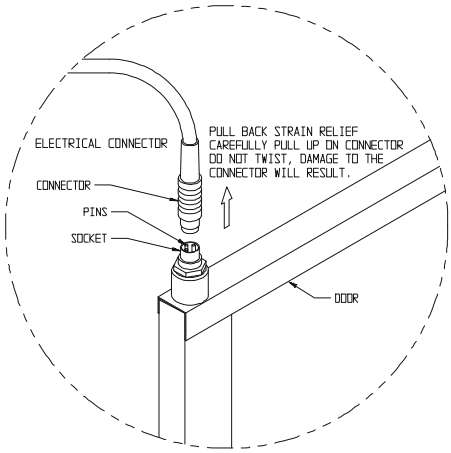

Figure 5-1

7. Remove the inner door upper hinge, shown as “E”. This hinge will be inverted and become the lower inner door hinge when the hardware is reassembled. When removing the door, set it aside on a flat surface, taking care not to damage the electrical sockets on the top and bottom of the door frame. At this time, remove the 5/8” black plastic bushing from the hinge. This bushing will be inserted in the top hinge when the door is installed on the right side of the cabinet.

The frame along the hinge side of the inner glass door has electrical connectors mounted on the frame at both the top and bottom of the door. Be careful not to damage the connectors by resting the weight of the door on them. Place the inner glass door on a flat surface where it cannot be damaged before moving on to the next step.

8. Remove the lower inner door hinge, “F”. Note that this hinge will be inverted and become the upper inner door hinge when the hardware is reassembled. Also, remove the 1” long white plastic bushing from the center of the hinge and insert it into the hinge removed in the step above.
9. The shoulder of the bushing must be on top as shown in Illustration B. Install the black plastic bushing into the hinge just removed and which will be the top hinge when the door is reversed. Refer also to Figure 5-2 on the next page.
10. Remove the two nylon screws at location “G”.
11. Remove the door strike plate at location “H” and install the two nylon screws just removed into the vacant holes.
12. Remove the two outer Phillips screws on the frame beneath the control panel, identified as “I” in the illustration. Remove only the two outer screws and pull the electronics tray out about one-inch.
13. *Refer to Illustration B on Page 5-5*.
14. Verify that the nylon screws have been installed in the vacant door strike holes, identified as “J”.
15. Move the door heater cable to the slot on the right side of the tray as shown in location “K”.
16. Push any excess cable into the tray area, making sure the wire will not be damaged when the tray is pushed back in and secured.
17. Install the lower inner door hinge, identified as location “L” in the drawing. (This was the top inner door hinge removed in Step 7 and should have the white plastic bushing installed.) Do not completely tighten the screws.
18. Insert the inner door into the lower hinge with the latch to the left. Align the door to the chamber opening and place the upper hinge in position as identified as “M”.

19. Insert the screws into the hinge but do not completely tighten them.
20. Match the pins on the yellow connector with the socket on the door. Press the connector completely into the socket and slide the strain relief down until no yellow is visible on the plug as shown in “N” of Figure 5-2.

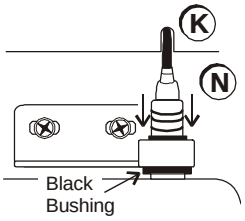

Figure 5-2

21. Push the power cable completely into the slot in the electronics tray. Press the tray into position and secure it with the screws at the “S” locations.
22. Align the silver power buss visible through the glass along the hinge side of the door with the gasket along the right side of the chamber opening.
23. When both hinges are in place with the hinge screws still loosened, push up on the bottom hinge. This will shift both hinges and the door upward. Tighten the hinge screws.
24. Attach the strike plate at location “O”, aligning it so the knob secures the door against the gasket.
25. Attach the outer door hinges at the “P” locations.
26. Install the nylon screws at the “R” locations.
27. Install the nylon screws in the “Q” locations.
28. Assemble the outer door to the incubator and return the unit to service.

5.5 Replacing Fuses

The electronics drawer contains hazardous voltages. Replacing the fuses should be done by qualified personnel only.

There are three fuses in the incubator that can be replaced. To replace a fuse:

1. Turn off the incubator’s power switch.
2. Unplug the power cord from the wall outlet.
3. Open the exterior cabinet door.
4. Remove two screws as shown. See Figure 5-3.
5. Carefully slide out electronics drawer.

There are two fuses on the main microboard. They are labeled: F1 24VAC Door Heater and F4 24VAC Collar Heater.

To locate the main microprocessor board, refer to Figure 5-4. Remove the appropriate fuse and replace it with a new fuse of the same specification. Refer to Table 5-1.

The other replaceable fuse is the accessory outlet fuse which is mounted to the floor of the electronics drawer. To locate the fuse, refer to Figure 5-10, and locate the accessory outlet fuse. Remove the fuse and replace with a new fuse of the same specification. Refer to Table 5-1 for the fuse specifications.

1. When the fuse has been replaced, slide the electronics drawer back in, being very careful to place the door heater cable back into the provided slot so that the drawer does not pinch the cable.
2. Replace the two screws removed earlier.
3. Close the exterior door.
4. Plug the power cord back into the dedicated, grounded circuit.
5. Turn on power switch. If the unit operates properly, it may now be returned to service.

Table 5-1, Fuse Replacement Chart

Fuse #	Manufacturers Part #	Amperage Rating	Rupture Speed	IEC Letter Code
F1	BUSS GMC-3.5A	3.5 Amp	Time-Lag	T
F4	BUSS GMC-2.5A	2.5 Amp	Time-Lag	T
115 VAC ACC	BUSS GMC - 1.0A	1.0 Amp	Time-Lag	T
230 VAC ACC	BUSS BK-GMC-500ma	0.5 Amp	Time-Lag	T

There is one fuse in the incubator that is not replaceable. This fuse is intended for catastrophic failure only and is located on the power supply circuit board in the electronics drawer. See Figure 5-4. If this fuse is blown, the power supply must be replaced. Contact the factory for more information.

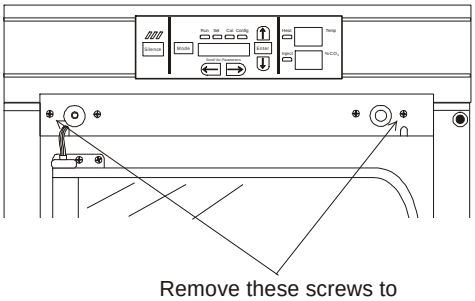

Figure 5-3

5.6 HEPA Filter Maintenance

Replace the HEPA filter routinely on an annual basis, or sooner if it changes color. The filter should also be changed each time the chamber is cleaned.

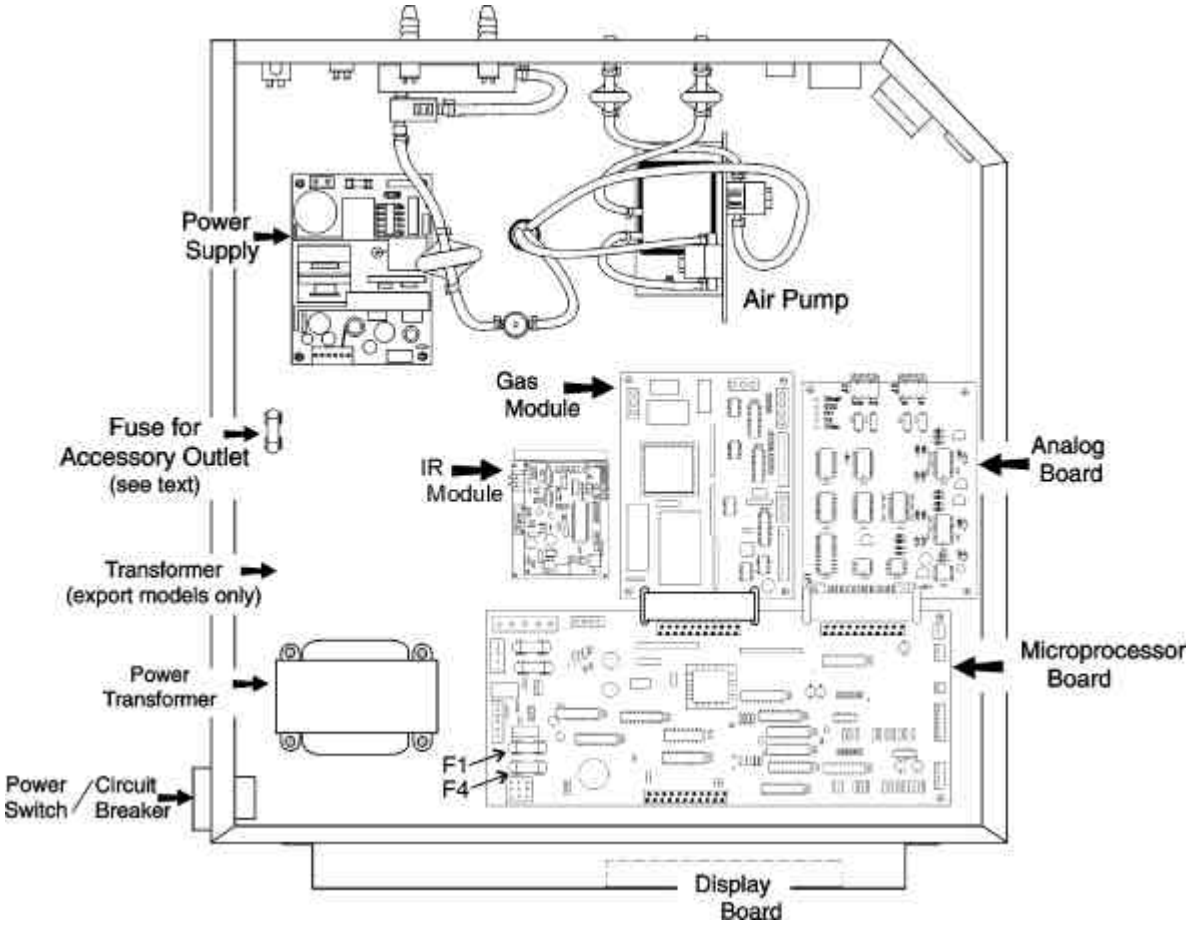

Figure 5-4, Electronics Drawer

5.7 Draining Water Jacket

1. Turn the unit off. Remove the plug from the power source.
2. Remove the front cover plate below the door. There are small flatblade screwdriver pry slots on each end of the plate to help remove it. See Figure 5-5.

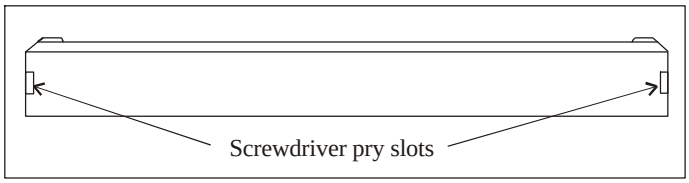

Figure 5-5, Front Cover Plate Below the Door

3. Remove the drain plug. Retain for use after draining is complete.
4. Connect the hose barb insert to the drain on lower front of the water jacket and to the drain hose.

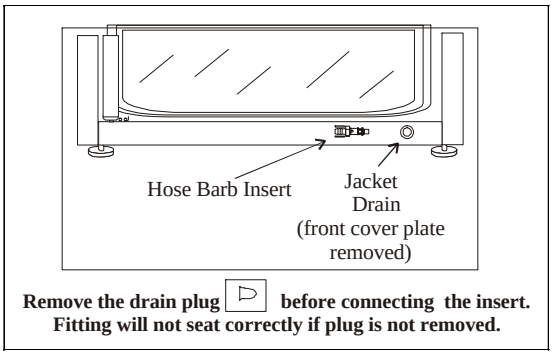

Figure 5-6, Water Jacket Drain and Hose Barb Insert

5. After water jacket has finished draining, remove the hose barb insert and secure on the front of the unit. See Figure 5-7.
6. Install the plug into the drain on the incubator
7. Install cover plate.

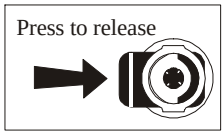

Figure 5-7

Section 6 - Factory Installed Options

6.1 Connections to External Equipment

a. Connecting the Remote Alarm Contacts

CAUTION
Contains Parts and Assemblies Susceptible to Damage by Electrostatic Discharge (ESD)

A set of relay contacts are provided to monitor alarms through an RJ-11 telephone style connector on the back of the cabinet. Refer to Figure 1-13 for the location of the alarm connector.

The remote alarm provides a NO (normally open) output, a NC (normally closed) output and COM (common). Refer to Figure 6-1.

The contacts will trip on a power outage or an over temperature condition. The contacts may also be programmed to trip or not trip on temperature alarms, CO_2 alarms, O_2 alarms, and RH alarms. See Section 3.1, System Configuration.

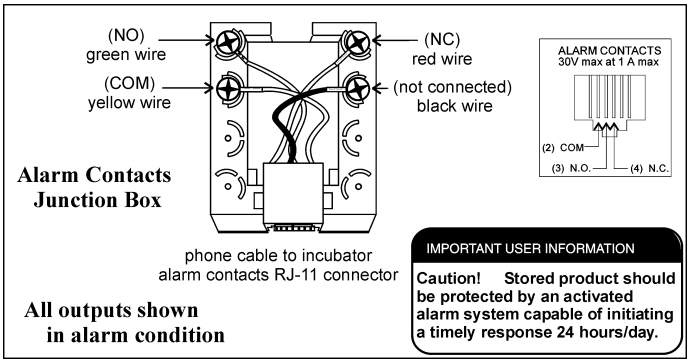

Figure 6-1

b. Connecting the RS485 Interface (190523)

All incubator models can be purchased with the RS485 communications option. This option allows the incubator to be directly connected to a Forma Model 1535 alarm system without the use of a communications module. A junction box is provided with each RS485 option. Refer to Figure 6-2 for wiring details.

To allow the incubator and the 1535 to communicate, an address must be allocated on the 1535. Refer to Section 5.8 of the 1535 operating manual. The same address number must be assigned to the incubator. Refer to Section 3.1 of this manual, System Configuration.

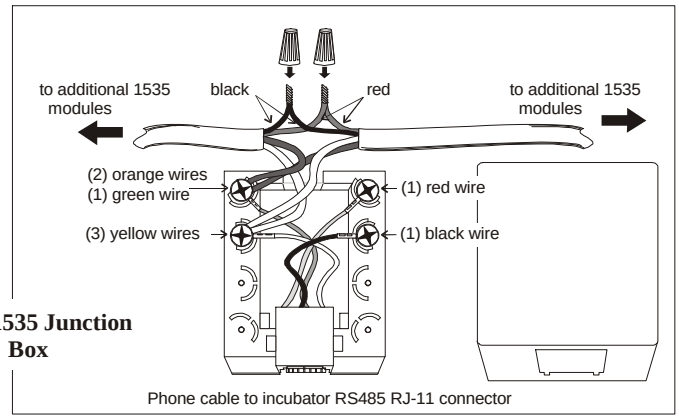

Figure 6-2

c. Connecting the Analog Output Boards (190512, 190543, 190544)

The electronics drawer contains hazardous voltages. Opening the drawer and/or wiring in an analog board should be done by qualified personnel only.

The analog output board is an option that allows the incubator to output analog signals representing the air temperature of the cabinet, the CO_2 content , the O_2 content, and the relative humidity, depending upon which systems are in the incubator. There are three different analog output board options available : 0-1V, 0-5V, or 4-20mA signals. Negative display readings will output 0V. The outputs do not have isolated grounds. Refer to Figure 6-3 for output specifications of the three boards.

	190512 4-20mA Output Scaling 4-20 mA Equals	**190544 0-1V** Output Scaling 0-1 V Equals	**190543 0-5V** Output Scaling 0-5V Equals
Temperature	0.0-100°C	0.0-100°C	0.0-100°C
RH	0-100%RH	0-100 % RH	0-100 % RH
CO_2	0.0-100.0% CO_2	0-100.0 % CO_2	0-100.0 % CO_2
O_2	0.0-100.0% O_2	0-100.0 % O_2	0-100.0 % O_2

Figure 6-3 Analog Output Board Specifications

To wire in the analog output board, Forma Scientific recommends wire Part # 73041, which is a 22-gauge, 3-conductor wire with a shield. This is readily available from other vendors including Alpha Part #2403, and Deerborn Part # 972203.

1. Turn off the incubator's power switch and unplug the power cord from the wall outlet.
2. Open the exterior cabinet door and remove the two screws shown in Figure 6-4.

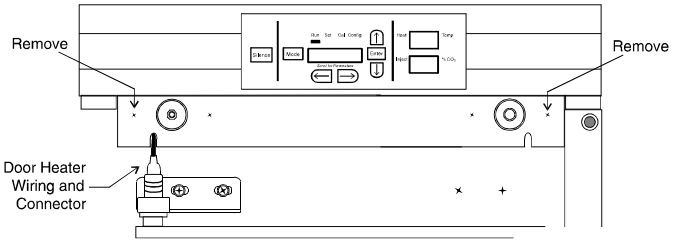

Figure 6-4

3. Carefully slide out electronics drawer and locate the Analog Output board. (Figure 6-5)

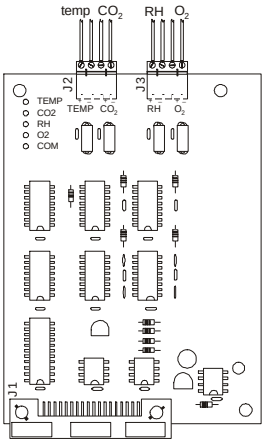

Figure 6-5

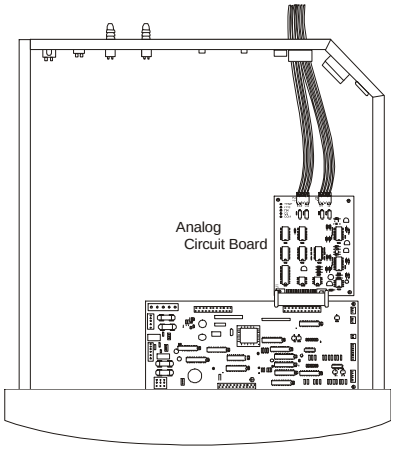

Figure 6-6

4. Each system monitored (Temp, CO_2, O_2, RH) requires two conductors. Feed the wire through the analog wiring inlet on the back of the drawer. See Figure 6-6.
5. Strip the ends of each conductor and wire to the appropriate terminals of connectors J2 and J3 on the analog board.
6. When wiring is completed, slide the electronics drawer back in being very careful to place the door heater cable back into the provided slot so that the drawer does not pinch the cable. See Figure 6-4.
7. Replace the two screws removed earlier and return the unit to service.

6.2 Gas Guard for CO_2 or N_2 (190640/190642)

The 3110 Series incubators can be equipped with a built-in gas guard system that will operate with either a CO_2 or a N_2 gas supply. Only one gas guard can be installed on each unit. The gas guard uses two pressure switches to continuously monitor the pressures of two independent CO_2 or N_2 supplies and automatically switches from one supply to the other when the supply pressure drops below 10 psig (0. 690 bar). The gas guard is not designed to be used with multiple incubators.

Both of the CO_2 or the N_2 gas supplies must be equipped with two-stage pressure regulators. The high pressure gauge at the tank should have a 0-2000 psig range and the low pressure gauge should have a 0-30 psig range. The gas supply to the incubator must be maintained at 15 psig (1.034 bar). Gas pressures below 15 psig (1.034 bar) will cause nuisance alarms to occur on incubators equipped with the built-in Gas Guard.

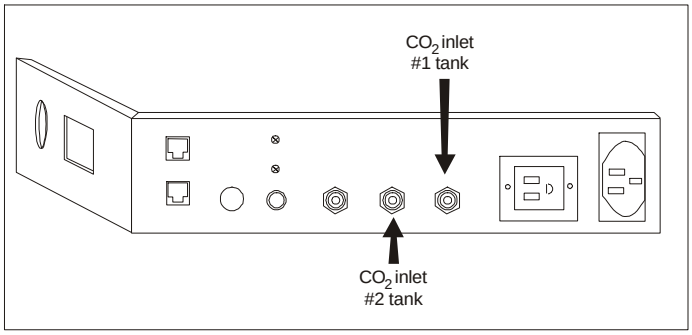

Figure 6-7, CO_2 fittings

a. Connecting the CO_2 Gas Supplies (refer to Figures 6-7 and 6-9):

The CO_2 inlets for a built-in gas guard are located on the rear of the electronics drawer. Using 1/4" ID tubing, connect one of the CO2 supply tanks to the fitting labeled CO_2 Inlet #1 Tank. Connect the second CO_2 supply tank to the fitting labeled CO_2 Inlet #2 Tank. Install 3/8" hose clamps to secure the 1/4" ID tubing to the fittings on the rear of the drawer.

b. Connecting the N_2 Gas Supplies (refer to Figure 6-8):

The N_2 inlets for a built-in gas guard are located on the rear of the electronics drawer. Using 1/4" ID tubing, connect one of the N_2 supply tanks to the fitting labeled N_2 Inlet #1 Tank. Connect the second N_2 supply tank to the fitting labeled N_2 Inlet #2 Tank. Install 3/8" hose clamps to secure the 1/4" ID tubing to the fittings on the rear of the drawer.

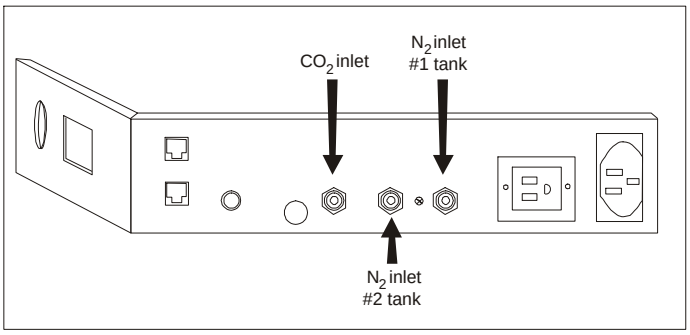

Figure 6-8, N_2 fittings

c. Activating the Built-in Gas Guard:

The built-in Gas Guard is not turned on when shipped from the factory. In addition, the Tank Select for the gas guard is specified as Tank 1 when shipped from the factory. Refer to Section 3, Configuration, to activate the Gas Guard or change the Tank Select from 1 to 2. If the operator does not want to use the Gas Guard, the incubator will function normally by supplying CO_2 (or N_2) through the CO_2 Inlet #1 Tank (or the N_2 Inlet #1 Tank).

d. Operation of the CO_2 or N_2 Gas Guard:

With the Gas Guard in operation, the incubator will use the gas supplied through CO_2 (or N_2) Inlet #1 Tank until the pressure drops below approximately 10 psig. At this time, the Gas Guard automatically switches to the gas supplied through CO_2 (or N_2) Inlet #2 Tank.

In addition, the incubator automatically changes the Tank Sel in Configure mode from 1 to 2 to indicate that the incubator is now using gas supplied through CO_2 (or N_2) Inlet # 2 Tank. If the gas supply to CO_2 (or N_2) Inlet #1 Tank is replenished, the incubator will continue to operate using the gas supplied through CO_2 (or N_2) Inlet #2 Tank unless the operator changes the Tank Select from 2 to 1 through the Configure mode. Refer to Section 3, Configuration.

An audible alarm and two visual alarms occur on the control panel when the gas guard switches from one supply to the other. The audible alarm will sound until the operator presses the Silence key on the control panel. A visual alarm in the Message Center will read Tank 1 Low while the audible alarm is sounding, but will be removed once the operator presses the Silence key.

Both the audible and visual alarms described above do not ring back once the Silence key is pressed

However, there is a second visual alarm, Tank Low, that illuminates in red below the Silence key on the control panel when either of the two gas supplies fall below 10 psig (0.690 bars). The Tank Low remains illuminated as long as the gas guard detects a low pressure on either of the gas supply lines. This message is a reminder for the operator to replace or check for insufficient gas supply to the incubator.

If the gas guard does not detect an adequate gas supply at the CO_2 (or N_2) Inlet #1 Tank or CO_2 (or N_2) Inlet #2 Tank, a visual and audible alarm will again occur on the control panel. The visual alarm in the Message Center will read Tank 1&2 Low. The audible alarm will continue to ring until the Silence key is pressed. The audible alarm will ring back every 15 minutes after the alarm is silenced, if the Gas Guard continues to detect that both gas supply pressures are below 10 psig (0.690 bars).

6.3 Humidity Readout (190643)

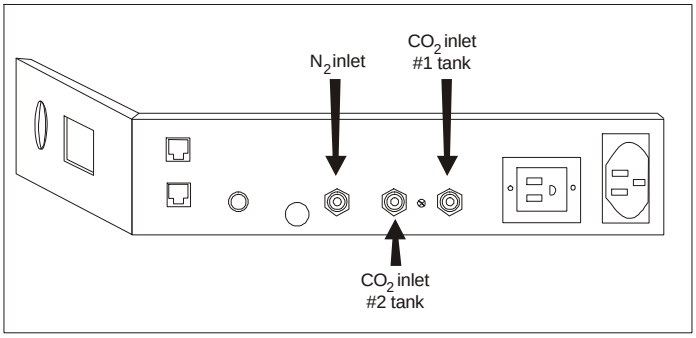

Figure 6-9

The 3110 Series incubators can be equipped with a humidity sensor to monitor the relative humidity (RH) inside the chamber. The sensor is mounted to the top air duct and provides a signal that is displayed in 1% increments on the control panel. The humidity readout can be displayed continuously or toggles with the temperature readout. In addition, a low alarm limit can be set on the humidity readout which will detect when the humidity pan runs dry. Refer to Section 3, Configuration.

a. Factors Affecting Humidity Level in Chamber:

- Water level in the humidity pan
- Frequency of door openings
- Humidity pan on the bottom of the chamber versus on a shelf
- Air leakage through the gaskets or stopper in the access port
- N2 purge on incubators with O_2 control.
- Humidity levels in O_2 units (3130, 3131, 3140, 3141) will be reduced, depending on the amount of N_2 required to control the O_2 level in the chamber.

The following table lists some typical RH levels at different O_2 and CO_2 percentages.

Incubators equipped with a Thermal Conductivity CO_2 sensor rely on a constant level of relative humidity in order to accurately measure and control the CO_2 concentration in the incubator.

%O_2	%CO_2	%RH (±5%)
2%	5%	60%
5%	10%	75%
10%	10%	80%
21%	5%	95%

Figure 6-10

b. Accuracy of the Humidity Readout:

The sensor is capable of measuring relative humidity from 10% to 100% with an accuracy of ±5% above 90%. See Section 2, Calibration for details on calibrating the humidity readout.

6.4 Factory Installed Cooling Coil

Note: For customer convenience, the following item is included in the shipping materials:12 ft. of 3/8" I.D. vinyl tubing, 4 clamps.

The operating (setpoint) temperature range of the incubator with the cooling coil installed is from +5°C above ambient down to +15°C.

The cooling coil incubator incorporates a finned, U-shaped copper pipe installed within the water jacket. Through this pipe flows chilled water provided by a laboratory bath, typically a Forma Model 2095.

When the cooling coil is in use, several factors affect the uniformity inside the incubator chamber: the temperature difference between the operating temperature set point and the bath water temperature; the flow rate of the chilled water, and the on-time percentage of the door heaters.

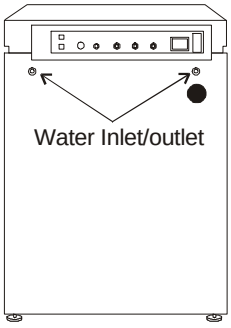

Figure 6-11, Back of Unit

As determined in carefully controlled laboratory tests, the smaller the difference between the temperature of the bath and the setpoint temperature of the incubator, the better the uniformity. However, decreasing this temperature difference does cause less control of the system because if the bath does not cool the water jacket adequately, the heaters do not cycle and the chamber temperature simply drifts with the ambient temperature of the room.

Tests have shown that as a starting point, operating the bath at 2°C to 3°C below the incubator's operating setpoint temperature, with a cooling water flow rate of 1/2 to 1 GPM (gallons per minute), should result in good control and uniformity.

Because of the efficiency of the cooling coil design, it is possible for condensation to occur on the outside of the incubator's water jacket when operating in certain ambient temperature and relative humidity conditions. The condensation will then saturate the fiberglass insulation between the water jacket and the incubator cabinet.

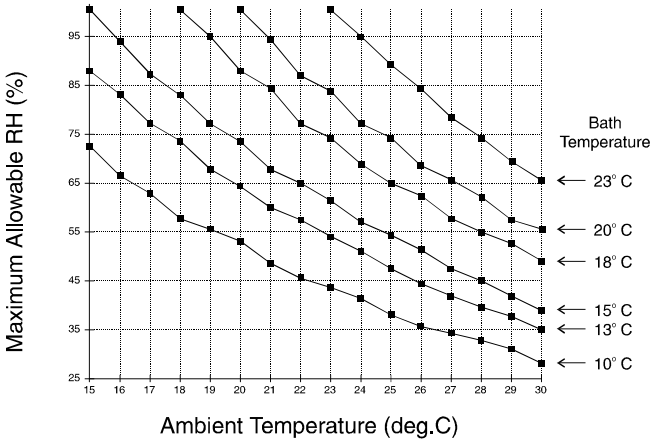

Figure 6-12
RH Limits to Avoid Water Jacket Condensation

Using psychometric data from the Carrier Psychometric Chart, curves of maximum allowable RH versus ambient temperature can be plotted for different incubator/bath conditions (Refer to Figure 6-12).

For example, if the bath is to be operated at 15°C and the ambient temperature is about 28°C, the RH in the room must be less than 45% to avoid condensation forming between the chamber water jacket and the outside of the cabinet.

a. Installing the Cooling Coil Incubator

Locate the (2) grey plastic hose barbs shipped inside the incubator. Insert the smooth end of the barb into the fittings on the back of the cabinet. Either can be used as the water inlet or outlet to the bath. Cutting the vinyl tubing in half, the bath can be located up to six feet from the incubator.

Section 7 - Specifications

*Specifications are based on nominal voltages of 115V or 230V in ambients of 22°C to 25°C.

Temperature	
Control	±(0.1°C
Range	+5°C above ambient to +55°C (131°F)
Uniformity	±0.2°C @ +37°C
Tracking Alarm	±User programmable high/low
Temperature Safety	
Sensor	Precision thermistor
Controller	Independent analog electronic
Setability	0.1°C
CO2/O2	
CO2/O2 Control	Better than ±0.1%
CO2 Range	0-20%
O2 Range	2-20%
Inlet Pressure	15 PSIG (1.034 bars)
CO2 Sensor	T/C or IR
O2 Sensor	Fuel Cell
Readability	0.1%
Setability	0.1%
Tracking Alarm	User programmable
Humidity	
RH	Ambient to 95% @ +37°C (98.6°F)
Humidity Pan	0.8 gal. (3 liters) standard
Optional	Display in 1% increments
Fittings	
Fill Port	3/8” barbed
Drain Port	1/4” barbed
Access Port	1-1/4” (3.18cm) removable neoprene plug
CO2 Inlet	1/4” hose barbed
Unit Heat Load	
115V/230V	344 BTUH (100 Watt)
Shelves	
Dimensions	18.5” x 18.5” (47.0cm x 47.0cm)
Construction	Stainless Steel, perforated, electropolished
Surface area	2.4 sq. ft. (0.22 sq. m)
Max. per Chamber	54.6 sp. Ft. (5.5 sq. m)
Loading	35 lb. (16kg) slide in and out
	50 lb. (23kg) stationary
Standard	4
Maximum	23

Construction	
Water Jacket Volume	11.7 gal. (43.5 liters)
Interior Volume	6.5 cu. ft. (184.1 liters)
Interior	Type 304, mirror finish, stainless steel
Exterior	18 gauge, cold rolled steel
Outer Door Gasket	Four-sided, molded magnetic vinyl
Inner Door Gasket	Removable, feather-edged, silicone
Electrical	
115V Models	90-125VAC, 50/60 Hz, 1 PH, 3.6 FLA
230V Models	180-250VAC, 50/60 Hz, I PH, 2.0 FLA
Circuit Breaker/Power Switch	6 Amp/2 Pole
Accessory Outlet	75 Watts max. (one per chamber)
Alarm Contacts	Deviation of temp., CO_2, O_2, and RH, power fail through customer connec tions through jack on back of unit. 30V, 1A max.
Optional Data Outputs	RS-485,)-1V, 0-5V, 4-20mA
Installation Category	Overvoltage Category II Pollution Degree 2
Maximum Leakage Current	With ground disconnected, 0.65mA Maximum permissible leakage, 3.5mA
Dimensions	
Interior	21.4” W x 26.8” H x 20.0” F-B (54.4cm x 68.1cm x 50.8cm)
Exterior	25.9” W x 39.6” H x 24.9” F-B (63.0cm x 100.3cm x 68.6cm)
Weight (per unit)	
Net	265 lb. (120 kg)
Net Operational	365 lb. (166 kg)
Shipping	324 lb. (147 kg)
Safety Specifications	
Altitude	2000 meters
Temperature	5°C to 40°C
Humidity	80% RH at or below 31°C, decreasing linearly to 50% RH at 40°C
Mains Supply Fluctuations	Operating Voltage Range
Installation Category 2[1]	
Pollution Degree 2[2]	
Class of Equipment	

[1] Installation category (overvoltage category) defines the level of transient overvoltage which the instrument is designed to withstand safely. It depends on the nature of the electricity supply and its overvoltage protection means. For example, in CAT II which is the category used for instruments in installations supplied from a supply comparable to public mains such as hospital and research laboratories and most industrial laboratories, the expected transient overvoltage is 2500 V for a 230 V supply and 1500 V for a 120 V supply.

[2] Pollution degree describes the amount of conductive pollution present in the operating environment. Pollution degree 2 assumes that normally only non-conductive pollution such as dust occurs with the exception of occasional conductivity caused by condensation.

Section 8 - Spare Parts

a. All Models

Forma Part #	Description
360171	Liquid Level Switch
103065	Feather Gasket
113002	5/16-18 Glide Foot
132046	115/230V Dual Heater
132049	Face Heater 40W, 24VAC
190630	Heated Inner Door
190618, 190619	Inner Door Hinges
190618	Right, Inner Door Hinge
700013	0.500” Flanged Nylon Bearing
990026	Door Gasket w/ Magnet
290138	Water Temp Probe, 2252 Ohm
290137	Air Temp Probe 2252 Ohm
190569	Micro Board
190509	Display Board
230153	6A Circuit Breaker/Switch
460157	Line Filter/Power Inlet
420096	130VA Transformer, International, 14/28V S
230135	1 AMP Fuse for 115 V Outlet
230106	1.5 Amp Fuse - Microboard
230159	3.5 Amp Fuse - Microboard
230158	2.5 Amp Fuse - Microboard
250085	Sol Valve 12V 10-32 Ports
770001	Disposable Filter 99.97
156098	Motor 2-Pole 115VAC
103075	Motor Gasket
100097	Blower Wheel 3.5x1.5 CCW
190631	Blower Scroll Assembly
760175	HEPA Filter
760142	Bacterial Air Filter
103072	Blower Plate Gasket
290090	CO2 Sensor Assembly
103074	CO2 Sensor Plate Gasket
130038	#6 Solid Neoprene Stopper
180001	Polypropylene Funnel
430108	Line Cord Set
110084	Drain Plug

b. Spare Parts for 230 V units (3111, 3121, 3131, 3141):

Forma Part #	Description
420097	43VA Transformer, INT. SRS
460138	Power Outlet, Snap-In Receptacle
230120	1/2 AMP Fuse for 230 V outlet

c. Spare Parts for IR or O_2 units (3120, 3121, 3130, 3131, 3140 and 3141):

Forma Part #	Description
190885	IR Sensor
190506	IR/O_2 Circuit Board
184058	Mini Vac/Press.Pmp .75LPM
250119	AC Solenoid
770001	Filter (W/C 451)
511026	3-Hole Stopper (W/C 451)
250118	Valve, Sol, O_2, 12VDC, 4W
290083	O_2 Sensor Fuel Cell
190661	IR Sensor Filter

d. Spare Parts for Gas Guards (190640/190642):

Forma Part #	Description
250121	Solenoid Valve, 3 WAY, 12VDC
360213	Pressure Switch

e. Spare Parts for Humidity Readout (190643):

Forma Part #	Description
290154	RH Sensor Assembly, 1 Ft

f. Spare Parts for Data Output Options:

Forma Part #	Description
190512	Analog Output Board 4-20 mA
190543	Analog Output Board 0-5V
190544	Analog Output Board 0-1V
73041	24 Gauge 3 Conductor, Analog Output Wire
190523	RS485 Output Kit

Section 9 - Electrical Schematics

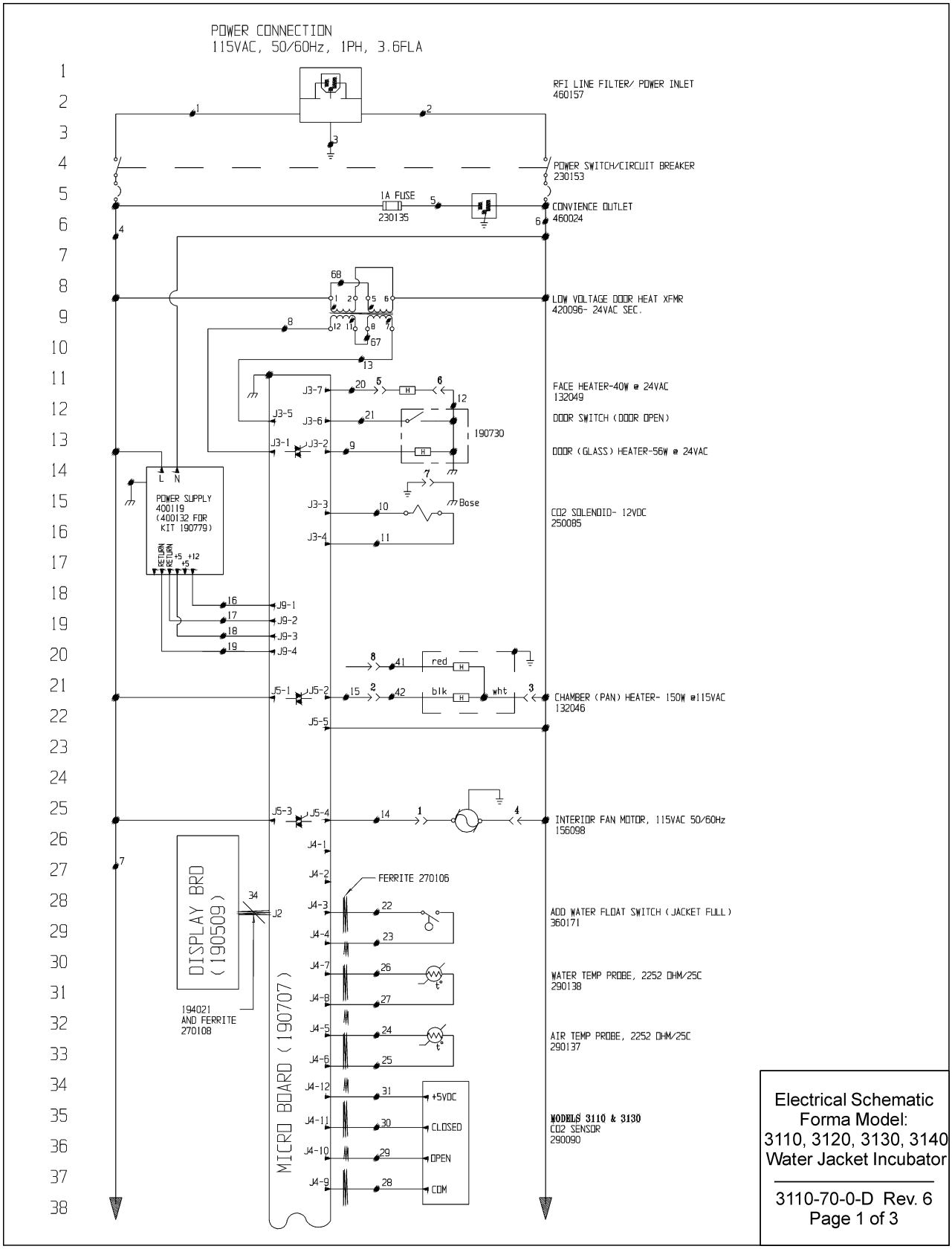

Electrical Schematic
Forma Model:
3110, 3120, 3130, 3140
Water Jacket Incubator

3110-70-0-D Rev. 6
Page 1 of 3

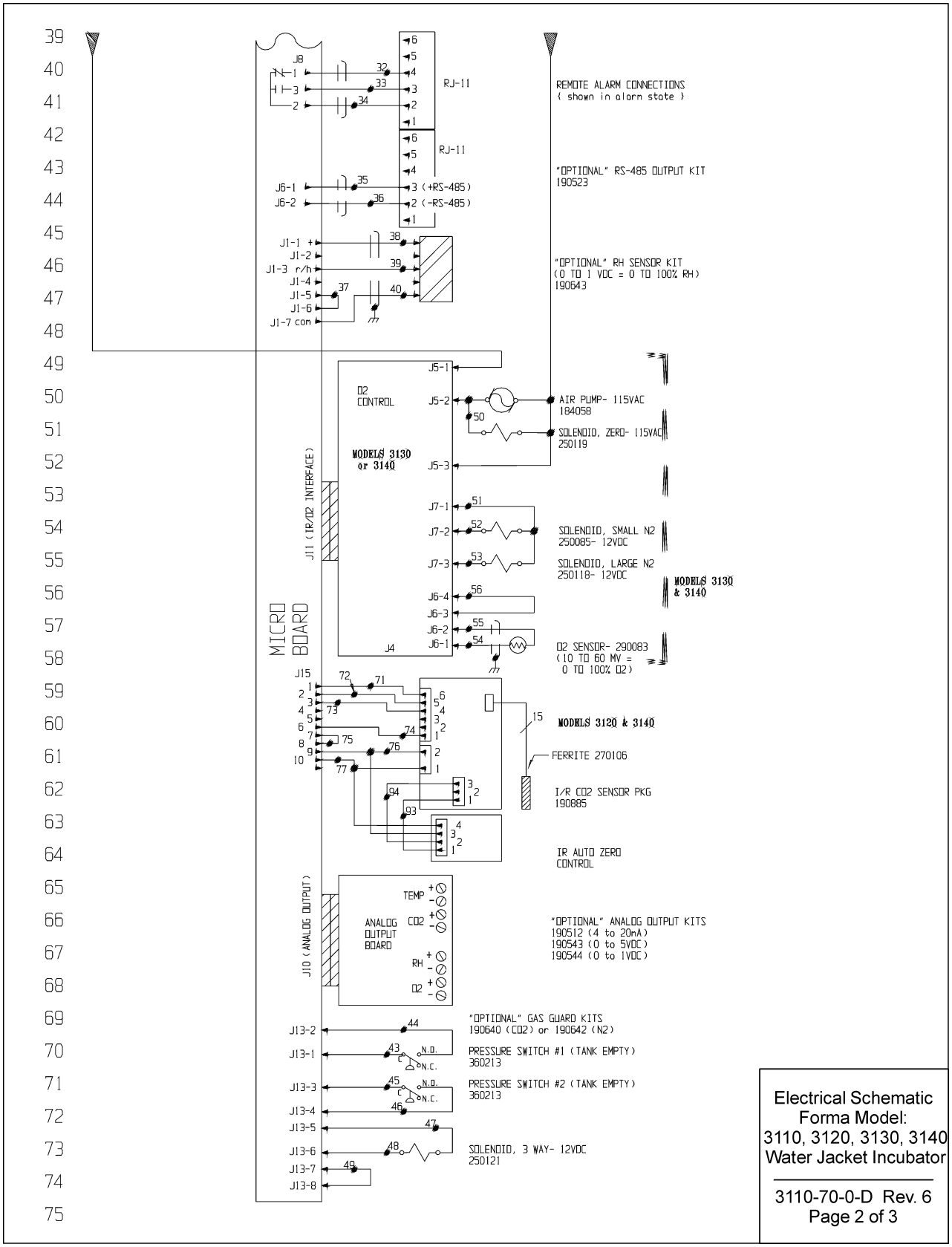

Electrical Schematic
Forma Model:
3110, 3120, 3130, 3140
Water Jacket Incubator

3110-70-0-D Rev. 6
Page 2 of 3

WIRE REFERENCE CHART

NO.	GA.	COLOR	NO.	GA.	COLOR	NO.	GA.	COLOR	NO.	GA.	COLOR
1	16	BROWN	22	22	BLUE	47	20	ORANGE	71	22	BLUE
2	16	BLUE	23	22	BLUE	48	20	ORANGE	72	22	ORANGE
3	16	GRN/YEL	24	22	RED	49	20	BLACK	73	22	YELLOW
3B	16	GREEN	25	22	RED	50	18	BROWN	74	22	BROWN
4	18	BLACK	26	22	YELLOW	51	20	YELLOW	75	22	BLACK
4A	18	BLACK	27	22	YELLOW	52	20	BROWN	76	22	RED
5	18	BLACK	28	22	GREEN	53	20	PURPLE	77	22	GREEN
6	18	WHITE	29	22	GRAY	54	22/2	RED	78	24/15	BLACK
7	18	PURPLE	30	22	PURPLE	55	22/2	BLACK	79	24/15	WHITE
8	18	BROWN	31	22	ORANGE	56	22	BLACK	80	24/15	RED
9	18	BLUE	32	22/3	BLACK	57			81	24/15	GREEN
10	18	YELLOW	33	22/3	RED	58			82	24/15	ORANGE
11	18	YELLOW	34	22/3	WHITE	59			83	24/15	BLUE
12	18	BLACK	35	22/2	RED	60			84	24/15	WHT/BLK
13	18	GREEN	36	22/2	BLACK	61			85	24/15	RED/BLK
14	18	BLUE	37	22	BLACK	62			86	24/15	GRN/BLK
15	18	ORANGE	38	22/3	BLACK	63			87	24/15	ORG/BLK
16	18	RED	39	22/3	RED	64			88	24/15	BLU/BLK
17	18	GREEN	40	22/3	GREEN	65			89	24/15	BLK/WHT
18	18	ORANGE	41	18	RED	66			90	24/15	RED/WHT
19	18	GREEN	42	18	BLACK	67	18	RED	91	24/15	GRN/WHT
20	18	ORANGE	43	20	RED	68	18	ORANGE	92	22	BLACK
21	22	BROWN	44	20	RED	69			93	22	BROWN
			45	20	BLUE	70	22	BLACK	94	22	WHITE
			46	20	BLUE						

SENSOR REFERENCE VALUES

CO2 (290090) DIFFERENCE VOLTAGE OF 3-6MV/%CO2
J4-9 & J4-10 TO J4-9 & J4-11

RH (190643) J1-7 & J1-1 = 12VDC
J1-7 & J1-3 = 10MV/%RH

O2 (290083) J6-1 & J6-2 = 12MV @ 21%O2

NOTES:

⊛ Denotes Terminal Strip Connection	Parts List Reference Number
Last Relay Number	○ Assembly
Last Terminal Number	⬠ Panel
Last Wire Number	⬡ Refrigeration
	□ Wiring

CUSTOMER APPROVAL/REFERENCE
APPROVED BY
APPROVING FIRM
DATE OF APPROVAL

THIS DOCUMENT CONTAINS PROPRIETARY INFORMATION AND SUCH INFORMATION IS NOT TO BE DISCLOSED TO OTHERS FOR ANY PURPOSE NOR USED FOR MANUFACTURING PURPOSES WITHOUT WRITTEN PERMISSION FROM FORMA SCIENTIFIC

Forma Scientific
BOX 649 MARIETTA, OHIO 45750 TELEX 24-5364
TOLL FREE USA 800-848-3080, OHIO 614-373-4763

REV	ECN NO.	DATE	BY	CAD	APPD	DESCRIPTION OF REVISION
6	IN-2460	01-18-99	RLM	KDG	LDN	CHG. 184032 AIR PUMP TO 184058
5	SI-7008	5-21-98	GLM	GLM	LDN	IR SENSOR REVISION
4	IN-2343	11-19-97	GLM	KDG	LDN	NOTED 400132 USED ON KIT
3	IN-2276	5-27-97	GLM	GLM	LDN	IMPLEMENT DCS IR CO2 SENSOR
2	IN-2161	09-30-96	AFC	PDK	LDN	ADDED SENSOR REFERENCE VALUES

DATE 9-24-95 | DWN GLM | CAD GLM | APPD M.H. | SCALE
CUSTOMER MODELS 3110, 3120, 3130, & 3140
JOB TITLE MODULAR WATER JACKET INCUBATOR 115 VOLT (DOM.)
DWG TITLE ELECTRICAL SCHEMATIC
LOCATION INCUBATR | JOB NUMBER | DRAWING NUMBER 3110-70-0-D

Electrical Schematic
Forma Model:
3110, 3120, 3130, 3140
Water Jacket Incubator

3110-70-0-D Rev. 6
Page 3 of 3

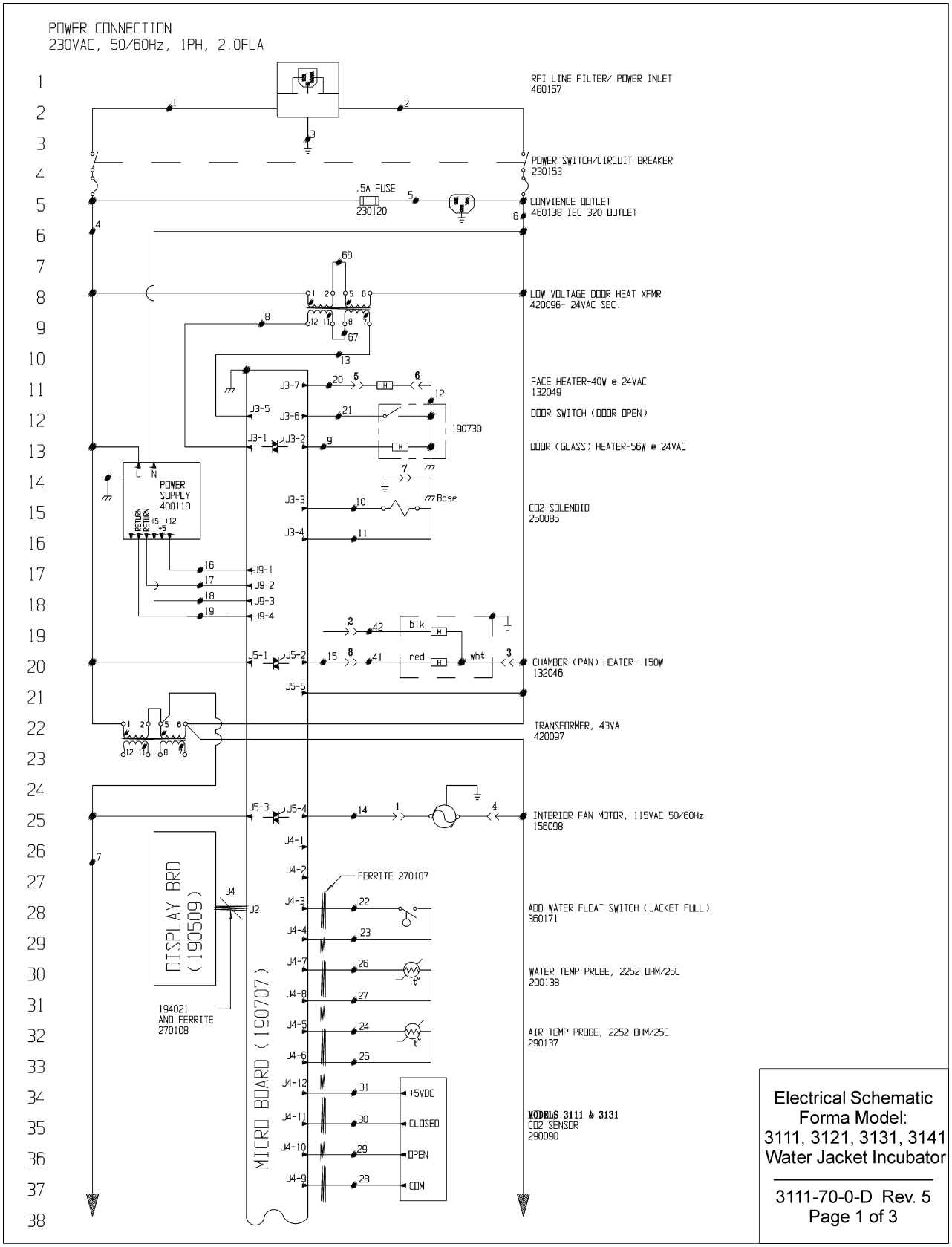
POWER CONNECTION
230VAC, 50/60Hz, 1PH, 2.0FLA
RFI LINE FILTER/ POWER INLET
460157
POWER SWITCH/CIRCUIT BREAKER
230153
.5A FUSE
230120
CONVIENCE OUTLET
460138 IEC 320 OUTLET
LOW VOLTAGE DOOR HEAT XFMR
420096- 24VAC SEC.
FACE HEATER-40W @ 24VAC
132049
DOOR SWITCH (DOOR OPEN)
190730
DOOR (GLASS) HEATER-56W @ 24VAC
POWER SUPPLY
400119
CO2 SOLENOID
250085
CHAMBER (PAN) HEATER- 150W
132046
TRANSFORMER, 43VA
420097
INTERIOR FAN MOTOR, 115VAC 50/60Hz
156098
DISPLAY BRD
(190509)
194021
AND FERRITE
270108
FERRITE 270107
ADD WATER FLOAT SWITCH (JACKET FULL)
360171
WATER TEMP PROBE, 2252 OHM/25C
290138
AIR TEMP PROBE, 2252 OHM/25C
290137
MODELS 3111 & 3131
CO2 SENSOR
290090
MICRO BOARD (190707)
+5VDC
CLOSED
OPEN
COM
Electrical Schematic
Forma Model:
3111, 3121, 3131, 3141
Water Jacket Incubator
3111-70-0-D Rev. 5
Page 1 of 3

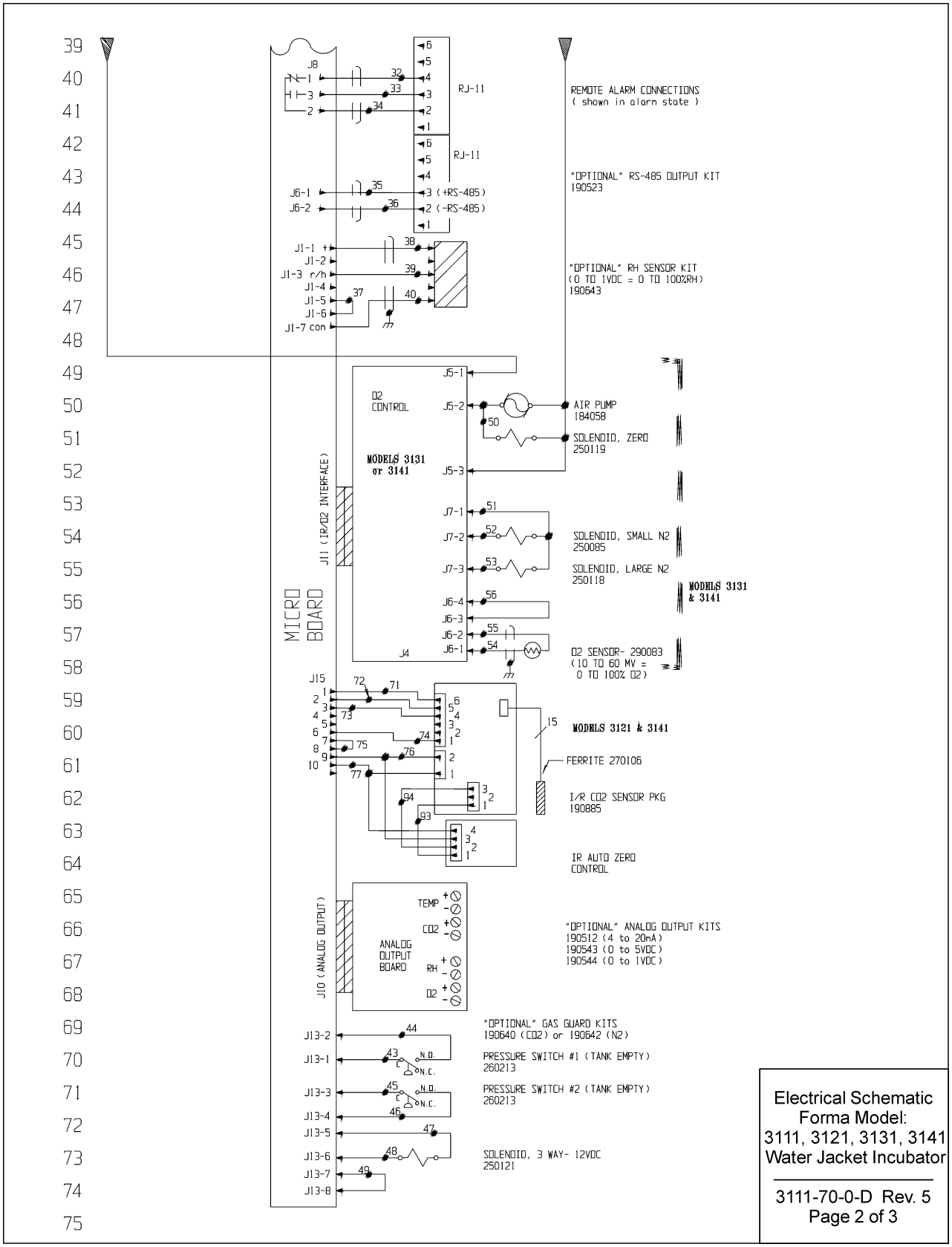

Electrical Schematic
Forma Model:
3111, 3121, 3131, 3141
Water Jacket Incubator

3111-70-0-D Rev. 5
Page 2 of 3

WIRE REFERENCE CHART

NO.	GA.	COLOR	NO.	GA.	COLOR	NO.	GA.	COLOR	NO.	GA.	COLOR
1	16	BROWN	22	22	BLUE	47	20	ORANGE	71	22	BLUE
2	16	BLUE	23	22	BLUE	48	20	ORANGE	72	22	ORANGE
3	16	GRN/YEL	24	22	RED	49	20	BLACK	73	22	YELLOW
3B	16	GREEN	25	22	RED	50	18	BROWN	74	22	BROWN
4	18	BLACK	26	22	YELLOW	51	20	YELLOW	75	22	BLACK
4A	18	BLACK	27	22	YELLOW	52	20	BROWN	76	22	RED
5	18	BLACK	28	22	GREEN	53	20	PURPLE	77	22	GREEN
6	18	WHITE	29	22	GRAY	54	22/2	RED	78	24/15	BLACK
7	18	PURPLE	30	22	PURPLE	55	22/2	BLACK	79	24/15	WHITE
8	18	BROWN	31	22	ORANGE	56	22	BLACK	80	24/15	RED
9	18	BLUE	32	22/3	BLACK	57			81	24/15	GREEN
10	18	YELLOW	33	22/3	RED	58			82	24/15	ORANGE
11	18	YELLOW	34	22/3	WHITE	59			83	24/15	BLUE
12	18	BLACK	35	22/2	RED	60			84	24/15	WHT/BLK
13	18	GREEN	36	22/2	BLACK	61			85	24/15	RED/BLK
14	18	BLUE	37	22	BLACK	62			86	24/15	GRN/BLK
15	18	ORANGE	38	22/3	BLACK	63			87	24/15	ORG/BLK
16	18	RED	39	22/3	RED	64			88	24/15	BLU/BLK
17	18	GREEN	40	22/3	GREEN	65			89	24/15	BLK/WHT
18	18	ORANGE	41	18	RED	66			90	24/15	RED/WHT
19	18	GREEN	42	18	BLACK	67	18	RED	91	24/15	GRN/WHT
20	18	ORANGE	43	20	RED	68	18	ORANGE	92	22	BLACK
21	22	BROWN	44	20	RED	69			93	22	BROWN
			45	20	BLUE	70	22	BLACK	94	22	WHITE
			46	20	BLUE						

SENSOR REFERENCE VALUES

CO2 (290090)	DIFFERENCE VOLTAGE OF 3-6MV/%CO2 J4-9 & J4-10 TO J4-9 & J4-11
RH (190643)	J1-7 & J1-1 = 12VDC J1-7 & J1-3 = 10MV/%RH
O2 (290083)	J6-1 & J6-2 = 12MV @ 21%O2

NOTES:

⊛	Denotes Terminal Strip Connection		Parts List Reference Number
	Last Relay Number	○	Assembly
	Last Terminal Number	⬠	Panel
	Last Wire Number	⬡	Refrigeration
		□	Wiring

CUSTOMER APPROVAL/REFERENCE
APPROVED BY
APPROVING FIRM
DATE OF APPROVAL

THIS DOCUMENT CONTAINS PROPRIETARY INFORMATION AND SUCH INFORMATION IS NOT TO BE DISCLOSED TO OTHERS FOR ANY PURPOSE NOR USED FOR MANUFACTURING PURPOSES WITHOUT WRITTEN PERMISSION FROM FORMA SCIENTIFIC

Forma Scientific
BOX 649 MARIETTA, OHIO 45750 TELEX 24-5394
TOLL FREE USA 800-848-3080, OHIO 614-373-4763

REV	ECN NO.	DATE	BY	CAD	APPD	DESCRIPTION OF REVISION
5	IN-2460	01-18-99	RLM	KDG	LDN	CHG. 184032 AIR PUMP TO 184058
4	SI-7008	5-21-98	GLM	GLM	LDN	IR CO2 SENSOR REVISION
3	IN-2276	5-27-97	GLM	GLM	M.H.	IMPLIMENT DCS IR CO2 SENSOR
2	IN-2161	09-30-96	AFC	PDK	LDN	ADDED SENSOR REFERENCE VALUES
1	IN-2115	07-19-96	KDG	KDG	LDN	CORRECT I/R CO2 SENSOR

DATE 9-24-95 | DWN GLM | CAD GLM | APPD M.H. | SCALE
CUSTOMER MODELS 3111, 3121, 3131 & 3141
JOB TITLE MODULAR WATER JACKET INCUBATOR 230 VOLT (EXPORT)
DWG TITLE ELECTRICAL SCHEMATIC
LOCATION INCUBATR | JOB NUMBER | DRAWING NUMBER 3111-70-0-D

Electrical Schematic
Forma Model:
3111, 3121, 3131, 3141
Water Jacket Incubator

3111-70-0-D Rev. 5
Page 3 of 3

Forma Scientific, Inc.
Millcreek Road, P.O. Box 649
Marietta, Ohio 45750
U.S.A.

Telephone (740) 373-4763
Telefax (740) 373-4189