Thermo
ELECTRON CORPORATION

Models 3950 and 3951

29 cu. ft. Capacity
Forma Reach-In CO_2 Incubator

Operating and Maintenance Manual

Manual No: 7003950 Rev. 7

Read This Instruction Manual.

Failure to read, understand and follow the instructions in this manual may result in damage to the unit, injury to operating personnel, and poor equipment performance.

All internal adjustments and maintenance must be performed by qualified service personnel.

Refer to the serial tag on the back of this manual.

The material in this manual is for information purposes only. The contents and the product it describes are subject to change without notice. Thermo Electron Corporation makes no representations or warranties with respect to this manual. In no event shall Thermo be held liable for any damages, direct or incidental, arising out of or related to the use of this manual.

If the incubator is not used in the manner specified in this operating manual, the protection provided by the equipment design may be impaired.

Model	CO_2 Sensor*	Voltage**
3950	T/C	100-120
3951	T/C	200-230

* T/C is a thermal conductivity sensor.

** All units are 50/60 Hz.

CAUTION

Contains Parts and Assemblies Susceptible to Damage by Electrostatic Discharge (esd)

MANUAL NUMBER 7003950

REV	ECR/ECN	DATE	DESCRIPTION	By
--	--	6/16/03	Removed note about shipping tape on screws of sidewalls	ccs
--	20959/IN-3048	10/1/02	Added spacers to power supply mounting	ccs
7	20841/IN-3038	7/10/02	Updated 3950 electrical schematic from 285758 to 460038 GFI outlet	ccs
--	20883/IN-3034	6/12/02	Clarified p-trap alignment on page 1-3	ccs
--	20651/IN-3019	2/26/02	Updated 1900008-06-1 to rev. 5, chg in control panel mounting hardware	ccs
6	19617	12/18/00	New door - updated electrical schematics	ccs
5	19105/IN-2808	7/24/00	Updated 1900008-06-1 to rev. 4, chg in standoffs	ccs
4	--	5/00	Changed to Quark format	ccs
3	18843/SI-7759	2/00	Shaker support chg; casters w/o brakes, lg. feet	ccs
2	18594/IN-2740	1/00	Updated exploded parts list drawings	ccs
1	--	11/99	Updates from the 3960 release (common parts)	ccs

Important operating and/or maintenance instructions. Read the accompanying text carefully.

Ce symbole attire l'attention de l'utilisateur sur des instructions importantes de fonctionnement et/ou d'entretien. Il peut être utilisé seul ou avec d'autres symboles de sécurité. Lire attentivement le texte d'accompagnement.

Wichtige Betriebs- und/oder Wartungshinweise. Lesen Sie den nachfolgenden Text sorgfältig.

Importante instruccions de operacion y/o mantenimiento. Lea el texto acompanante cuidadosamente.

Potential electrical hazards. Only qualified persons should perform procedures associated with this symbol.

Ce symbole attire l'attention de l'utilisateur sur des risques électriques potentiels. Seules des personnes qualifiées doivent appliquer les instructions et les procédures associées à ce symbole.

Gefahr von Stromschlägen. Nur qualifizierte Personen sollten die Tätigkeiten ausführen, die mit diesem Symbol bezeichnet sind.

Potencial de riesgos electricos. Solo personas das capacitadadas deben ejecutar los procedimientos asociadas con este simbulo.

Equipment being maintained or serviced must be turned off and locked off to prevent possible injury.

Risques potentiels liés à l'énergie. L'équipement en entretien ou en maintenance doit être éteint et mis sous clé pour éviter des blessures possibles.

Geräte, an denen Wartungs- oder Servicearbeiten durchgeführt werden, müssen abgeschaltet und abgeschlossen werden, um Verletzungen zu vermeiden.

El equipo recibiendo servicio o mantenimiento debe ser apagado y segurado para prevenir danos.

Hot surface(s) present which may cause burns to unprotected skin, or to materials which may be damaged by elevated temperatures.

Présence de surface(s) chaude(s) pouvant causer des brûlures sur la peau non protégée, ou sur des matières pouvant être endommagées par des températures élevées.

Heiße Oberfläche(n) können ungeschützter Haut Verbrennungen zufügen oder Schäden an Materialien verursachen, die nicht hitzebeständig sind.

Superficias calientes que pueden causar quemaduras a piel sin proteccion o a materiales que pueden estar danados por elevadas temperaturas.

√ Always use the proper protective equipment (clothing, gloves, goggles, etc.)
√ Always dissipate extreme cold or heat and wear protective clothing.
√ Always follow good hygiene practices.
√ Each individual is responsible for his or her own safety.

Do You Need Information or Assistance on Thermo Electron Products?

If you do, please contact us 8:00 a.m. to 6:00 p.m. (Eastern Time) at:

1-740-373-4763	Direct
1-888-213-1790	Toll Free, U.S. and Canada
1-740-373-4189	FAX
http://www.thermoforma.com	Internet Worldwide Web Home Page
service@thermoforma.com	Service E-Mail Address

Our **Sales Support** staff can provide information on pricing and give you quotations. We can take your order and provide delivery information on major equipment items or make arrangements to have your local sales representative contact you. Our products are listed on the Internet and we can be contacted through our Internet home page.

Our **Service Support** staff can supply technical information about proper setup, operation or troubleshooting of your equipment. We can fill your needs for spare or replacement parts or provide you with on-site service. We can also provide you with a quotation on our Extended Warranty for your Thermo products.

Whatever Thermo products you need or use, we will be happy to discuss your applications. If you are experiencing technical problems, working together, we will help you locate the problem and, chances are, correct it yourself...over the telephone without a service call.

When more extensive service is necessary, we will assist you with direct factory trained technicians or a qualified service organization for on-the-spot repair. If your service need is covered by the warranty, we will arrange for the unit to be repaired at our expense and to your satisfaction.

Regardless of your needs, our professional telephone technicians are available to assist you Monday through Friday from 8:00 a.m. to 6:00 p.m. Eastern Time. Please contact us by telephone or fax. If you wish to write, our mailing address is:

Thermo Electron Corporation
Controlled Environment Equipment
Millcreek Road, PO Box 649
Marietta, OH 45750

International customers, please contact your local Thermo Electron distributor.

Table of Contents

Section 1 - Installation and Start-Up . . . . . .1 - 1
1.1 Control Panel Keys, Displays and Indicators . . . . . .1 - 2
1.2 Operation of the Keypad . . . . . .1 - 2
1.3 Installing the Unit . . . . . .1 - 3
a. Choosing the Location . . . . . .1 - 3
b. Preliminary Cleaning and Disinfecting . . . . . .1 - 3
c. Installing the Shelves . . . . . .1 - 3
d. Leveling the Unit . . . . . .1 - 3
e. Attaching the Drain Lines . . . . . .1 - 3
f. The Water Supply . . . . . .1 - 4
g. Filling the Humidity Reservoir . . . . . .1 - 4
h. Connecting the Unit to Electrical Power . . . . . .1 - 4
i. Connecting the CO_2 Gas Supply . . . . . .1 - 5
1.4 Incubator Start-Up . . . . . .1 - 5
a. Setting the Operating Temperature . . . . . .1 - 5
b. Setting the Overtemp Setpoint . . . . . .1 - 6
c. Setting the CO_2 Setpoint . . . . . .1 - 6

Section 2 - Calibration . . . . . .2 - 1
2.1 Calibration Mode . . . . . .2 - 1
a. Calibrating the Temperature . . . . . .2 - 1
b. Calibrating the CO_2 System . . . . . .2 - 1

Section 3 - Configuration . . . . . .3 - 1
3.1 Configuration Mode . . . . . .3 - 1
a. Disabling the ADD WATER Alarm . . . . . .3 - 1
b. Turning All Audible Alarms ON/OFF . . . . . .3 - 1
c. Setting an Access Code . . . . . .3 - 1
d. Setting Low Temp Alarm Limit (tracking alarm) 3 - 1
e. Enabling Temp Alarms to Trip Relay Contacts . . .3 - 1
f. Setting Low CO_2 Alarm Limit (tracking alarm) .3 - 2
g. Setting High CO_2 Alarm Limit (tracking alarm) .3 - 2
h. Enabling CO_2 Alarms to Trip Relay Contacts . . .3 - 2
i. Setting New Zero Number for New CO_2 Sensors .3 - 2
j. Setting New Span Number for CO_2 Sensors . . . . .3 - 2
k. Enabling the High Humidity Feature . . . . . .3 - 2
l. Selecting a Primary Tank w/ Gas Guard Option . .3 - 3
m. Enabling the Gas Guard System . . . . . .3 - 3
n. Setting RS485 Communications Address
(1535 compatible only) . . . . . .3 - 3

Section 4 - Alarms . . . . . .4 - 1
4.1 Alarms . . . . . .4 - 1
4.2 Sensor Fault Alarms . . . . . .4 - 1

Section 5 - Maintenance . . . . . .5 - 1
5.1 Cleaning . . . . . .5 - 1
5.2 Cleaning the Glass Doors . . . . . .5 - 1
5.3 Cleaning the Humidity Reservoir . . . . . .5 - 1
5.4 Replacing the Power Fuses . . . . . .5 - 2
Table 5-1, Fuse Replacement Chart . . . . . .5 - 2
5.5 Discarding or Taking the Incubator out of Service . .5 - 2

Section 6 - Factory Options . . . . . .6 - 1
6.1 Connections to External Equipment . . . . . .6 - 1
a. Connecting the Remote Alarm Contacts . . . . . .6 - 1
b. Connecting the RS485 Interface . . . . . .6 - 1
c. Connecting Analog Output Boards . . . . . .6 - 1
6.2 CO_2 Gas Guard . . . . . .6 - 2
a. Connecting the CO_2 Gas Supplies . . . . . .6 - 2
b. Activating the Gas Guard . . . . . .6 - 2
c. Operation of the CO_2 Gas Guard . . . . . .6 - 2
6.3 Inner Doors . . . . . .7 - 1
6.4 Shaker Support Shelves . . . . . .7 - 1

Section 7 – Specifications . . . . . .7 - 1
7.1 Specifications . . . . . .7 - 1

Section 8 - Spare Parts . . . . . .8 - 1
Exploded Parts Drawings . . . . . .8 - 2

Section 9 - Electrical Schematics . . . . . .9 -1

Section 10 - Warranty and Supplemental Information . .10 - 1

Section 1 - Installation and Start-Up

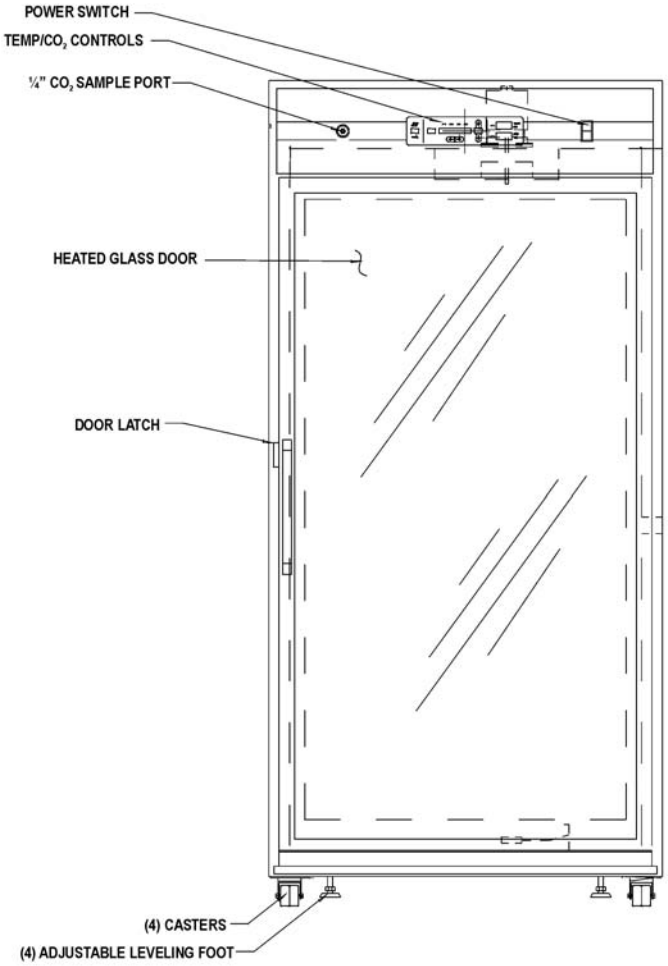

Figure 1-1
Front View

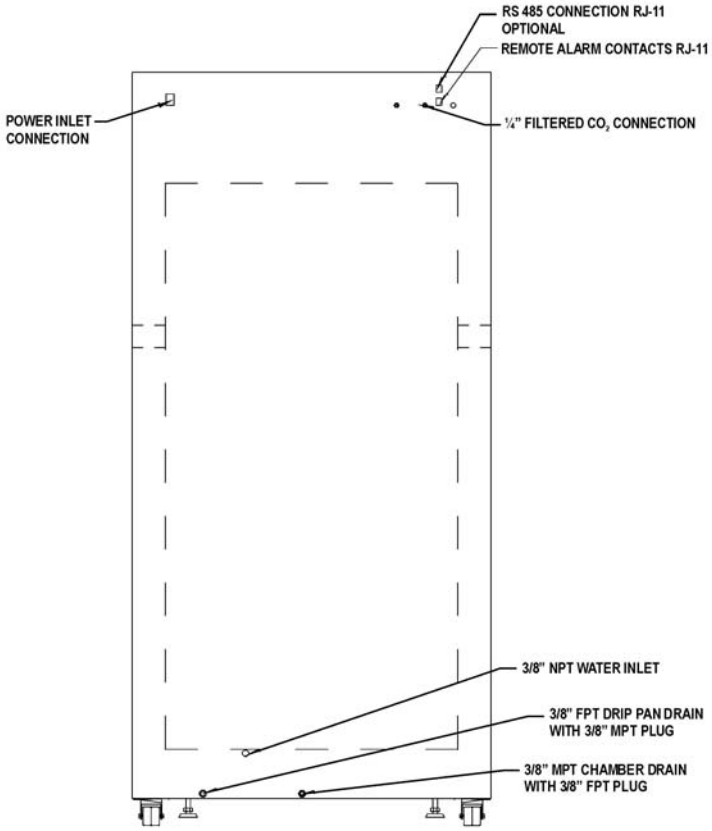

Figure 1-2
Back View

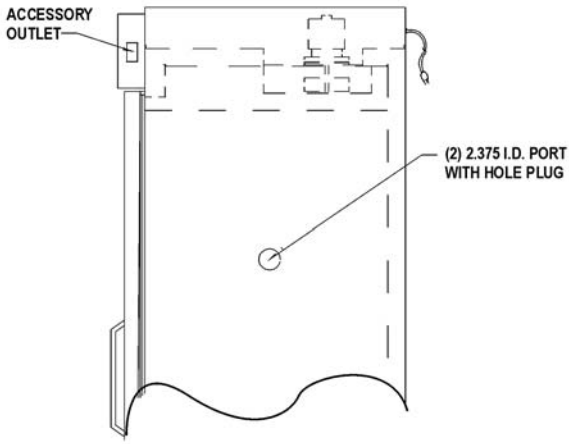

Figure 1-3
Side View

1.1 Control Panel Keys, Displays and Indicators

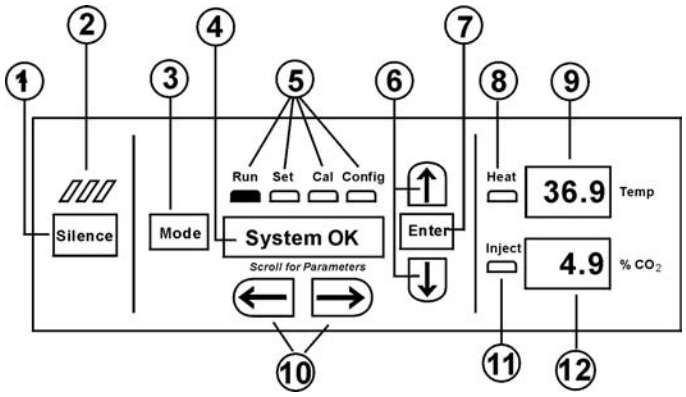

Figure 1-4

1. Silence - Silences the audible alarm.
2. Alarm Indicator - Light pulses on/off during an alarm condition in the cabinet.
3. Mode Select Switch - Used to select Run, Setpoints, Calibration and System Configuration Modes.
4. Message Center - Displays system status.
5. Mode Select Indicators -
   - Run: Run Menu
   - Set: Set Points Menu
   - Cal: Calibrate Menu
   - Config:: Configuration Menu
6. Up and Down Arrows - Increases or decreases the number values, toggles between choices.
7. Enter - Stores the value into computer memory.
8. Heat Indicator - Lights when power is applied to the heaters.
9. Temp Display – Displays temperature continuously
10. Scroll for Parameters Arrows - Moves the operator through the choices of the selected mode.
11. CO_2 Inject Indicator - Lights when CO_2 is being injected into the incubator.
12. % CO_2 Display - Displays CO_2 percentage continuously.

1.2 Operation of the Keypad

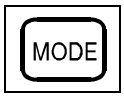

The Model 3950 Series Reach-In Incubator has four basic modes that allow incubator setup: Run, Setpoints, Calibration and System Configuration.

- Run is the default mode during normal operation.
- Set is used to enter system setpoints.
- Calibration is used to calibrate various system parameters.
- Configuration allows for custom setup of various options.

The chart below shows the selections under each of the modes.

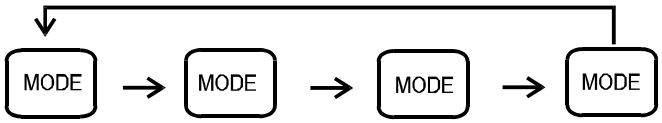

RUN	SETPOINT	CALIBRATION	CONFIGURATION
Default Mode	**Temperature** **Overtemp** **CO_2**	**Temp Offset** **CO_2 Cal**	**Audible** **Access Code** **Temp Lo Alarm** **Temp Relay** **CO_2 Lo Alarm** **CO_2 Hi Alarm** **CO_2 Relay** **CO_2 Z & S #'s** **RH High On/Off** **H_2O Alarm On/Off** *Tank Select* *Gas Guard* **RS485 Address**

Basic Unit Displays
Option Displays

Scroll for Parameters Arrows: Steps the operator through the parameters of SET, CAL and CONFIG Modes. The right arrow goes to the next parameter, the left arrow returns to the previous parameter.

Up Arrow: Increases or toggles the parameter values that have been selected in the SET, CAL, and CONFIG Modes.

Enter: Must press Enter key to save to memory all changed values.

Down Arrow: Decreases or toggles the parameter values that have been selected in the SET, CAL and CONFIG Modes.

Silence Key: Press to silence the audible alarm. See Section 4 for alarm ringback times.

1.3 Installing the Unit

a. Choosing the Location

Units must be installed against a wall or similar structure. Maintain a three inch clearance behind the incubator for electrical, water and gas hook-ups.

- Locate the unit on a firm level surface capable of supporting the unit weight of approximately 500 lbs.
- Locate the unit away from doors and windows and heating and air conditioning ducts.

This incubator weighs approximately 500 lbs. Have sufficient personnel available when moving.

b. Preliminary Cleaning and Disinfecting

Disinfect all interior surfaces with a general-use laboratory disinfectant. Rinse thoroughly with sterile distilled water, then 70% ethanol. Dry with a sterile cloth as needed.

Disinfect the shelf channels and shelves, then rinse with distilled water before installing.

Before using any cleaning or decontamination method except those recommended by the manufacturer, users should check with the manufacturer that the proposed method will not damage the equipment.

Accidental spills of hazardous materials on or inside this unit are the responsibility of the user.

c. Installing the Shelves

The shelves may be installed at any level in the incubator. Install a shelf channel on each side. With the tabs pointing up, attach the channel by locating the rivet into a slotted hole, far end first. Pull the channel toward the front and slide the front rivet on the channel into the slotted hole and press down. Make sure that the channels are opposite each other so that the installed shelf will be level.

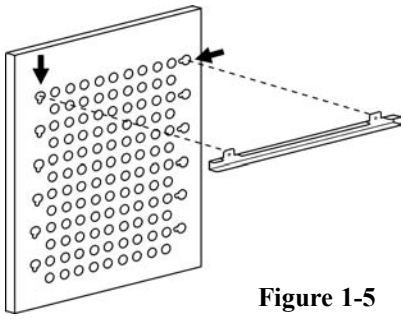

Figure 1-5

d. Leveling the Unit

Place a bubble-type level on a shelf inside the incubator. Adjust the feet as needed; counterclockwise to lengthen or clockwise to shorten. Level the unit front-to-back and left-to-right.

e. Attaching the Drain Lines

NOTE: Drain connections on the back of the unit are shipped capped. If humidity is not required, the caps should be left on the drains.

If manual or gravity feed method is used for humidity in the cabinet, connecting the drains is optional.

If an in-house distilled water supply is used to fill the reservoir, it is recommended that the drains be connected to a floor drain.

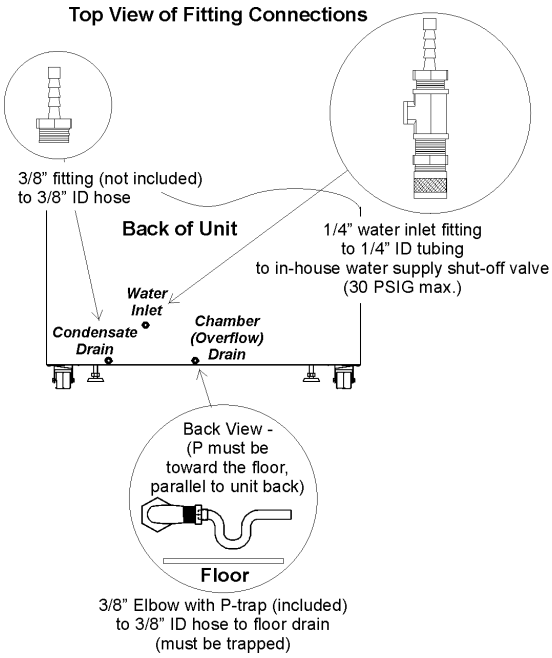

Figure 1-6

f. The Water Supply

For best operation of the incubator, sterilized distilled, demineralized or de-ionized water should be used in the humidity reservoir. Water purity should be in the resistance range of 50K Ohm/cm to 1M Ohm/cm, or a conductivity range of 20.0 uS/cm to 1.0 uS/cm. Refer to ASTM Standard D5391-93 or D4195-88 for measuring water purity.

Distillation systems, as well as some types of reverse osmosis water purity systems, can produce water in the quality range specified. Tap water is not recommended as it may contain chlorine, which can deteriorate the stainless steel. Tap water may also have a high mineral content, which would produce a build-up of scale in the reservoir. High purity, ultra pure or milli-q water is not recommended as it is an extremely aggressive solvent and will deteriorate the stainless steel. High purity water has a resistance of above 1M Ohm to 18M Ohm. Even high purity water can contain bacteria and organic contaminants. Water should always be sterilized or treated with a decontaminant, safe for use with stainless steel as well as safe for the product, prior to being introduced into the humidity reservoir.

The incubator is equipped with a liquid level float switch that detects low water levels in the humidity reservoir and produces an alarm condition. As all applications do not require humidity, this alarm can be disabled. To disable the ADD WATER alarm, see Section 3.1a. If humidity is required in the current application, press the Silence key on the control panel to mute the alarm while the humidity reservoir is being filled.

Distilled or de-ionized water used in the humidity reservoir must be within a quality resistance range of 50K Ohm/cm to 1M Ohm/cm to protect and prolong the life of the stainless steel. Use of water outside the specified range will decrease the operating life of the unit and may void the warranty.

g. Filling the Humidity Reservoir

1. In-house “distilled” water supply

All incubators provide a connection for using an in-house water supply. Connect a low pressure (not more than 30 PSI) water line, equipped with a manual shut-off valve, to the inlet fitting on the float valve reservoir. The 1/4” hose connection is located on the rear of the incubator cabinet. With the water turned on, a float valve inside the incubator regulates the water level in the humidity reservoir. When the reservoir is full, a 10-second audible tone is heard and the ADD WATER message no longer displays.

2. Manual method

This fill system consists of a funnel attached to the side duct sheet and tubing located inside the incubator. Disinfect the funnel and rinse with sterile water before using. This funnel may be moved to a preferred location by unscrewing the well nuts and disconnecting it from the sidewall. Tighten the nuts after relocation. The holes allotted for funnel use are slightly larger and in a centralized area. See Figure 1-6.

To fill the reservoir, pour sterile distilled water (approximately 2.5 gallons) into the funnel. When the float switch trips, a 10-second audible tone sounds and the ADD WATER message no longer displays. Add 1 gallon after the 10-second tone is heard.

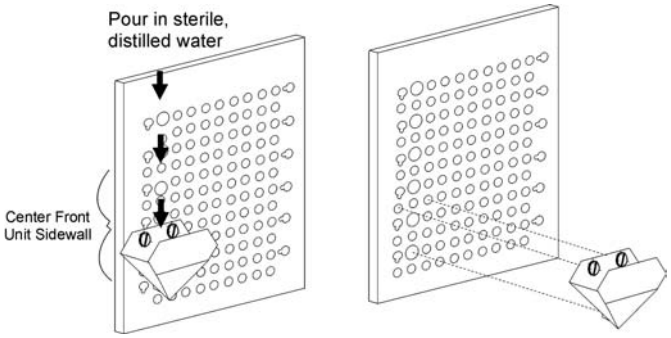

Figure 1-6

3. Gravity feed method

An optional carboy water fill system is also available. The carboy option kit includes an instruction sheet that details the installation of the system.

h. Connecting the Unit to Electrical Power

See the serial tag on the side of the unit for electrical specifications or refer to the electrical schematics at the end of this manual.

Connect the incubator to a grounded, dedicated circuit. The power cord connector is the mains disconnect device for the incubator. Position the incubator so the unit can be easily disconnected.

Plug the provided power cord into the power inlet connector on the back of the cabinet, then into the grounded, dedicated electrical circuit.

The 3950 Series also has an internal outlet located on the right side of the interior back wall. The outlet is to provide power (230W maximum) to accessory equipment. This outlet is not to be used when the temperature is above 40°C and the RH more than 50%.

i. Connecting the CO_2 Gas Supply

High concentrations of CO_2 gas can cause asphyxiation.
OSHA Standards specify that employee exposure to carbon dioxide in any 8-hour shift of a 40-hour work week shall not exceed the 8-hour time weighted average of 5000 PPM (0.5% CO_2). The short-term exposure limit for 15 minutes or less is 30,000 ppm (3% CO_2). Carbon dioxide monitors are recommended for confined areas where concentrations of carbon dioxide gas can accumulate.
This incubator is designed for CO_2 gas only. Connecting a flammable or toxic gas could result in a hazardous condition.
Gases other than CO_2 should not be connected to this equipment. CO_2 gas cylinders have a UN1013 label on the cylinder and are equipped with a CGA 320 outlet valve. Check the gas cylinder for the proper identification labels. The CO_2 gas supply being connected to the incubator should be industrial grade, 99.5% pure. Do not use CO_2 gas cylinders equipped with siphon tubes. A siphon tube is used to extract liquid CO_2 from the cylinder, which can damage the pressure regulator. Consult with your gas supplier to ensure that the CO_2 cylinder does not contain a siphon tube. Gas cylinders should also be secured to a wall or other stationary object to prevent them from tipping.
A two-stage CO_2 pressure regulator is required to be installed on the outlet valve of the gas cylinder. Input pressure to the incubator must be maintained at 15 psig (103.4 kPa) for proper performance of the CO_2 control system. A single stage CO_2 pressure regulator will not maintain 15 psig (103.4 kPa) to the incubator as the pressure in the CO_2 cylinder decreases; therefore, a two-stage regulator is recommended.
If higher purity CO_2 is desired inside the incubator (greater than 99.5% pure), the pressure regulator should be constructed with a stainless steel diaphragm, along with specifying the purity of the CO_2 from the gas supplier. Follow the manufacturer's instructions to ensure proper and safe installation of the pressure regulator on the gas cylinder.
Consult your facility safety officer to ensure that the equipment is installed in accordance with the codes and regulations that are applicable in your area.

The CO_2 gas supply being connected should be industrial grade 99.5% pure and should not contain siphon tubes. Install a two-stage pressure regulator at the cylinder outlet. The high pressure gauge at the tank should have 0-2000 psig range. The low pressure gauge, at the incubator inlet, should have a 0-30 psig range. Input pressure to the incubator must be maintained at 15 psig (103.4 kPa).

Each tank should be connected to one incubator only.

The incubator has serrated fittings on the back of the cabinet to connect the gas supply. Refer to Figure 1-2. The fitting is labeled CO_2 Inlet #1 Tank. Make sure that the connections are secured with clamps. Check all fittings for leaks.

For units having the CO_2 Gas Guard option, refer to Section 6.2.

1.4 Incubator Start-Up

With the incubator properly installed, connected to power, the humidity reservoir filled and the unit connected to a gas supply, system setpoints can be entered. The following setpoints can be entered in Set Mode: Temperature, Overtemperature and CO_2. To enter Set Mode, press the Mode key until the Set indicator lights. Press the right and/or left arrow keys until the proper parameter appears in the message display center. See Chart 1-1 for more detail.

a. Setting the Operating Temperature

This incubator has an operating temperature range of 10.0°C to 60.0°C, depending on ambient temperature. It is shipped from the factory with a temperature setpoint of 10.0° C. At this setting, all heaters are turned off. To change the operating temperature setpoint:

1. Press the Mode key until the Set indicator lights.
2. Press the right arrow until "Temp XX.X" is displayed in the message center.
3. Press up/down until the desired temperature setpoint is displayed.
4. Press Enter to save the setpoint.
5. Press the Mode key until the Run indicator lights for Run mode or press the right/left arrow keys to go to next/previous parameter.

Any equipment placed inside chamber must be rated for unit operating temperature and humidity.

b. Setting the Overtemp Setpoint

The independent overtemp system is designed as a safety to protect the incubator only. It is not intended to protect or limit the maximum temperature of the cell cultures or customer's equipment inside the incubator if an overtemp condition occurs.

All Model 3950 Series incubators are equipped with a secondary temperature monitoring system to monitor the air temperature inside the cabinet. This system is designed as a safety device to turn off all heaters in the event of a temperature control failure. The temperature control point in the incubator will be approximately ±1°C of the overtemp setpoint.

The overtemp setpoint is set by the factory (default) at 40°C. However, the overtemp can be reset over a range from 0.5°C above the operating temperature setpoint to 65°C.

If the incubator's operating temperature setpoint is set above the overtemp setpoint, the overtemp setpoint will automatically update to 1°C above the temperature setpoint. It is recommended that the overtemp setpoint be maintained at 1°C over the operating temperature setpoint.

To set the Overtemp setpoint:

1. Press the Mode key until the Set indicator lights.
2. Press the right arrow until Otemp XX.X is displayed in the message center.
3. Press the up or down arrow until the desired Otemp setpoint is displayed.
4. Press Enter to save the setting.
5. Press the Mode key until the Run indicator lights, or press the right or left arrow to go to the next or previous parameter.

c. Setting the CO_2 Setpoint

All CO_2 cells are calibrated at the factory at 37°C, medium humidity and 10% CO_2. Therefore, if a temperature setpoint of 37°C has been entered, the humidity reservoir has been filled and the CO_2 control is set to run between 0-10%, the CO_2 setpoint may be entered immediately. Otherwise, it is important to allow the unit 12 hours to stabilize at the temperature setpoint before entering the CO_2 setpoint.

All models of the incubator have a CO_2 setpoint range of 0.0% to 20.0%. The incubator is shipped from the factory with a CO_2 setpoint of 0.0%. At this setting, all CO_2 control and alarms are turned off.

To change the CO_2 setpoint:

1. Press the Mode key until the Set indicator lights.
2. Press the right arrow until "CO2 XX.X" is displayed in the message center.
3. Press the up/down arrow until the desired CO_2 setpoint is displayed.
4. Press Enter to save the setpoint.
5. Press the Mode key until the Run indicator lights to go to Run mode, or press the right/left arrow keys to go to next/previous parameter.

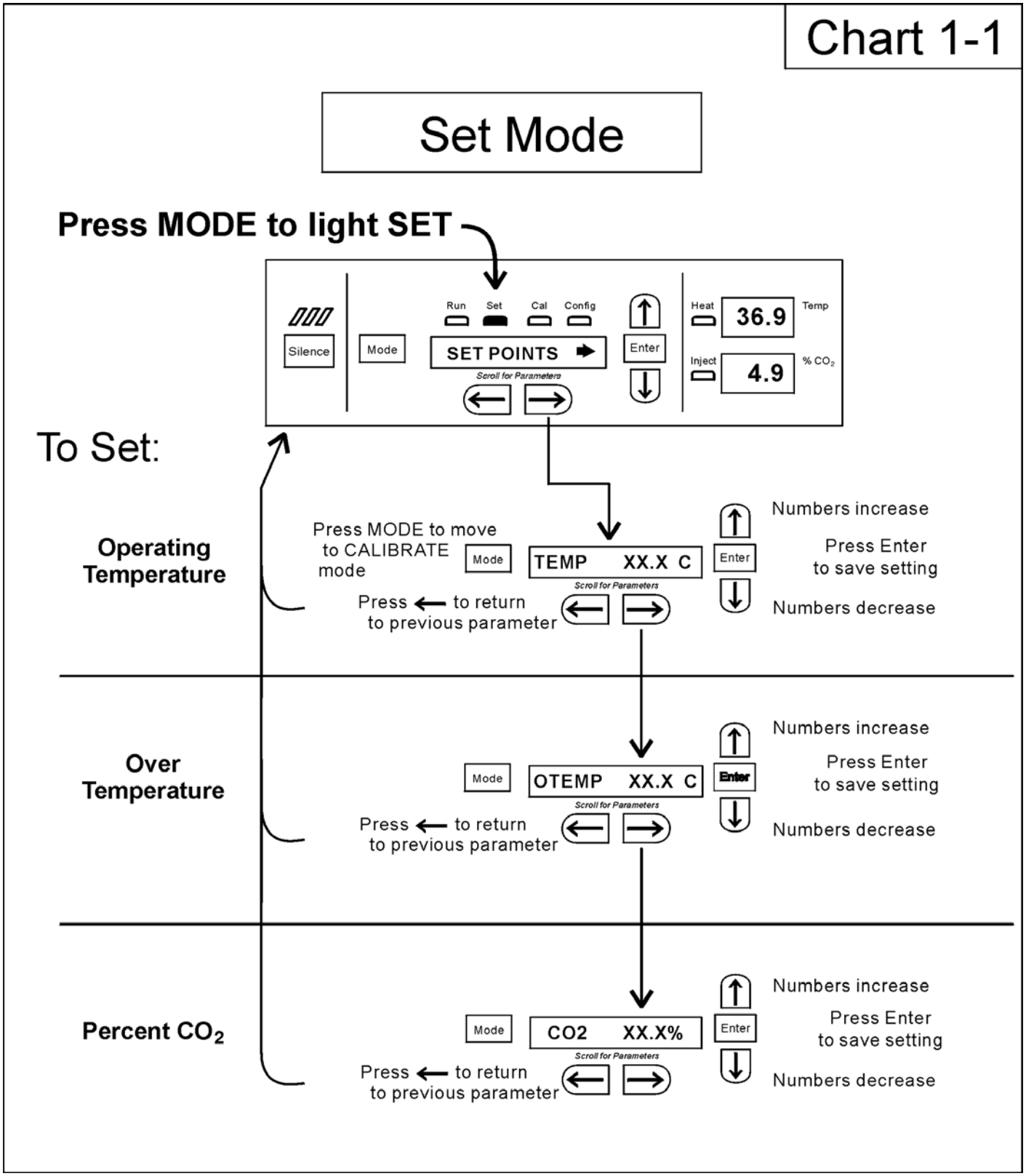
Chart 1-1
Set Mode
Press MODE to light SET
Run
Set
Cal
Config
Silence
Mode
SET POINTS
Scroll for Parameters
Enter
Heat
36.9
Temp
Inject
4.9
% CO2
To Set:
Operating Temperature
Press MODE to move to CALIBRATE mode
Mode
TEMP XX.X C
Scroll for Parameters
Press ← to return to previous parameter
Enter
Numbers increase
Press Enter to save setting
Numbers decrease
Over Temperature
Mode
OTEMP XX.X C
Scroll for Parameters
Press ← to return to previous parameter
Enter
Numbers increase
Press Enter to save setting
Numbers decrease
Percent CO2
Mode
CO2 XX.X%
Scroll for Parameters
Press ← to return to previous parameter
Enter
Numbers increase
Press Enter to save setting
Numbers decrease

Section 2 - Calibration

2.1 Calibration Mode

After the unit has stabilized, several different systems can be calibrated. In the calibration mode, the air temperature, CO_2 and RH levels can be calibrated to reference instruments. To access the calibration mode, press the Mode key until the Cal indicator lights. Press the right and/or left arrow until the proper parameter appears in the message center. See Chart 2-1 at the end of this section for more detail.

Calibration frequency is dependent on use, ambient conditions and accuracy required. A good laboratory practice would require at least an annual calibration check. On new installations, all parameters should be checked after the stabilization period.

Prior to calibration, the user should be aware of the following system functions. While the unit is in the calibration mode, all system control functions are stopped so the unit remains stable. Readout of the system being calibrated will appear on the message center. If no keys are pressed for approximately five minutes while in Calibration mode, the system will reset to Run mode so control functions are reactivated.

Before making any calibration or adjustments to the unit, it is imperative that all reference instruments be properly calibrated.

a. Calibrating the Temperature

Before calibration, allow the cabinet temperature to stabilize. Place the calibrated instrument in the center of the chamber. The instrument should be in the airflow, not against the shelf.

Temperature Stabilization Periods

Start-Up - Allow 12 hours for the temperature in the cabinet to stabilize before proceeding.

Presently Operating - Allow at least 2 hours after the display reaches setpoint for temperature to stabilize before proceeding.

1. Press the Mode key until Cal indicator lights.
2. Press the right arrow until “TEMPCAL XX.X” appears in the message center.
3. Press the up/down arrow to match the display to the calibrated instrument.
4. Press Enter to store calibration.
5. Press the Mode key to return to Run or the right/left arrow to go to next/previous parameter.

b. Calibrating the CO_2 System

Model 3950 Series incubators have a CO_2 sensor. The incubator atmosphere is not only effected by the quantity of CO_2 present but also by the air temperature and water vapor present in the incubator atmosphere. In monitoring the effects of CO_2 , air temperature and absolute humidity must be held constant so any change is caused by a change in CO_2 concentration.

Changing temperature or changing from elevated humidity to room ambient humidity levels will require re-calibration of the CO_2 control.

CO_2 Sensor Stabilization Periods

Start -Up - The CO_2 sensor has been calibrated at the factory for 37°C and elevated humidity. Allow the temperature, humidity and CO_2 levels in the chamber to stabilize at least 12 hours before checking the CO_2 concentration with an independent instrument.

Presently Operating - Make sure the chamber doors are closed. Allow at least 2 hours after the temperature and CO_2 displays reach their setpoints for chamber atmosphere stabilization.

1. Make sure the stabilization periods outlined above are followed.
2. Sample the chamber atmosphere through the sample port with an independent instrument. Sample the atmosphere at least 3 times to ensure accuracy of the instrument.
3. Press the Mode key until the Cal indicator lights.
4. Press the right arrow until “CO2 CAL XX.X” is displayed in the message center.
5. Press the up /down arrows to change the display to match the independent instrument.
6. Press Enter to store the calibration.
7. Press the Mode key to return to Run or the right or left arrows to go to the next/ previous parameter.

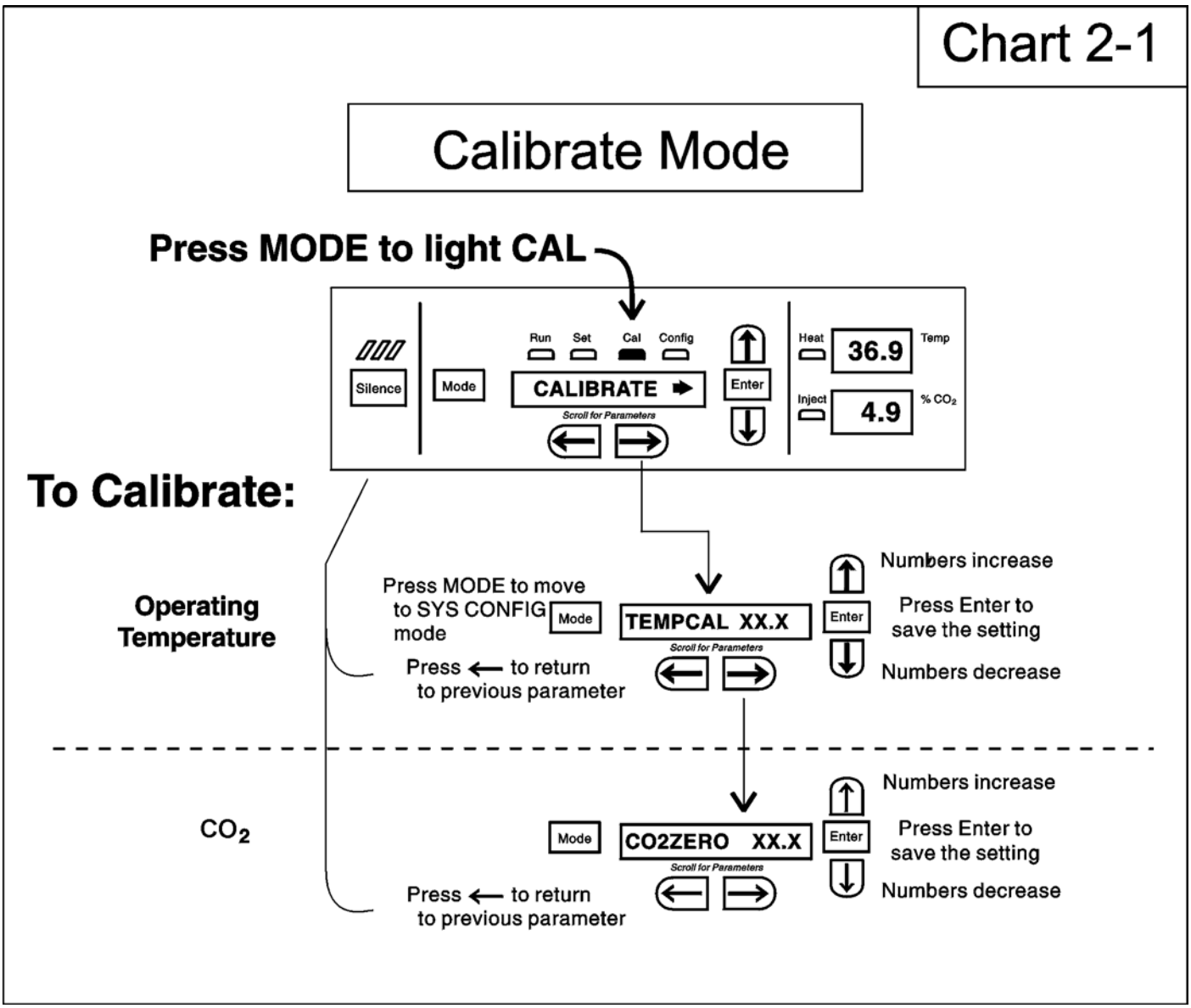
Chart 2-1
Calibrate Mode
Press MODE to light CAL
Silence
Mode
Run
Set
Cal
Config
CALIBRATE
Scroll for Parameters
Enter
Heat
36.9
Temp
Inject
4.9
% CO2
To Calibrate:
Operating Temperature
Press MODE to move to SYS CONFIG mode
Mode
TEMPCAL XX.X
Scroll for Parameters
Press ← to return to previous parameter
Enter
Numbers increase
Press Enter to save the setting
Numbers decrease
CO2
Mode
CO2ZERO XX.X
Scroll for Parameters
Press ← to return to previous parameter
Enter
Numbers increase
Press Enter to save the setting
Numbers decrease

Section 3 - Configuration

3.1 Configuration Mode

Several features available in the Configuration Mode allow custom setup of the incubator. These features are listed and described below. All features may not be necessary in all applications, but are available if needed. To enter Configuration mode, press the Mode key until the Config indicator lights. Press the right and/or left arrow until the appropriate parameter appears in the message center. See Chart 3-1 at the end of this section for more detail.

a. Disabling the ADD WATER Alarm

All applications do not require humidity. For this reason, the ADD WATER alarm can be disabled. The factory default for the ADD WATER alarm is ON.

1. Press the Mode key until the Config indicator lights.
2. Press the right arrow until H2O ALM XXX is displayed in the message center.
3. Press up/down arrow to toggle H2O ALM ON or OFF.
4. Press Enter to save the setting.
5. Press the Mode key to return to run mode or right/left to go to next/previous parameter.

Note: Verify that the RH HIGH feature is set to OFF after disabling the ADD WATER alarm.

b. Turning All Audible Alarms ON/OFF

The audible alarms can be turned on or off. The factory setting is ON.

1. Press the Mode key until the Config indicator lights.
2. Press the right arrow until Audible XXX is displayed in the message center.
3. Press up/down arrow to toggle Audible ON/OFF.
4. Press Enter to save the setting.
5. Press the Mode key to return to run mode or right/left to go to next/previous parameter.

c. Setting an Access Code

A 3-digit Access Code can be entered to avoid unauthorized personnel from changing the setpoints, calibration, or configuration. A setting of 000 will bypass the access code. The factory setting is 000.

1. Press the Mode key until the Config indicator lights.
2. Press the right arrow until Acc Code XXX is displayed in the message center.
3. Press up or down arrow to change the access code.
4. Press Enter to save the access code.
5. Press the Mode key to return to the Run mode or right/left to go to next/previous parameter.

d. Setting Low Temp Alarm Limit (tracking alarm)

The low temp alarm limit is the deviation from the temperature setpoint, which will cause a low temp alarm. The low temp alarm is variable from 0.5° below setpoint to 5.0° below setpoint. The factory setting is 1.0° below setpoint. A minus sign in the display indicates that the alarm setting is below the setpoint.

1. Press the Mode key until the Config indicator lights.
2. Press the right arrow until Temp Lo -X.X is displayed in the message center.
3. Press up/down arrow to change the low temp alarm limit.
4. Press Enter to save the low temp alarm limit.
5. Press the Mode key to return to Run mode or right/left to go to next/previous parameter.

e. Enabling Temperature Alarms to Trip Relay Contacts

The temperature alarms can be programmed to trip the remote alarm contacts. A setting of ON will cause this, a setting of OFF will not allow temperature alarms to trip the contacts. The factory setting is ON.

1. Press the Mode key until the Config indicator lights.
2. Press the right arrow until TMP RLY XXX is displayed.
3. Press the up/down arrow to toggle the setting ON/OFF.
4. Press Enter to save the setting
5. Press the Mode key to return to Run or the right/left arrow key to go to next/previous parameter.

f. Setting Low CO_2 Alarm Limit (tracking alarm)

The low CO_2 alarm limit is the deviation from the CO_2 setpoint, which will cause a low CO_2 alarm. The setpoint is variable from 0.5 % CO_2 below setpoint to 5.0 % CO_2 below setpoint. The factory setting is 1.0 % CO_2 below setpoint. A minus in the display indicates that the alarm setting is below the setpoint.

1. Press the Mode key until the Config indicator lights.
2. Press the right arrow until CO2 LO -X.X is displayed in the message center.
3. Press up/down arrow to change the low CO2 alarm limit.
4. Press Enter to save the low CO2 alarm limit.
5. Press the Mode key to return to Run mode or right/left to go to next/previous parameter.

g. Setting High CO_2 Alarm Limit (tracking alarm)

The high CO_2 alarm limit is the deviation from the CO_2 setpoint, which will cause a high CO_2 alarm. The setpoint is variable from 0.5 % CO_2 above setpoint to 5.0 % CO_2 above setpoint. The factory setting is 1.0 % CO_2 above setpoint.

1. Press the Mode key until the Config indicator lights.
2. Press the right arrow until CO2 HI X.X is displayed in the message center.
3. Press up/down arrow to change the high CO_2 alarm limit.
4. Press Enter to save the high CO_2 alarm limit.
5. Press the Mode key to return to run mode or right/left to go to next/previous parameter.

h. Enabling CO_2 Alarms to Trip Relay Contacts

High and Low CO_2 alarms can be programmed to trip the remote alarm contacts. A setting of ON will cause this, a setting of OFF will not allow CO_2 alarms to trip the contacts. The factory setting is ON.

1. Press the Mode key until the Config indicator lights.
2. Press the right arrow until CO2 RLY XXX is displayed in the message center.
3. Press up/down arrow to toggle the setting ON/OFF.
4. Press Enter to save the setting.
5. Press the Mode key to return to Run Mode or right/left to go to next/previous parameter.

i. Setting New Zero Number for New CO_2 Sensors

If a new CO_2 sensor is being installed, the two numbers on the factory installed sticker on the cell must be entered to calibrate the CO_2 in the unit.

Note: For the technician's convenience, a label containing the two numbers on the cell is affixed inside the electronics drawer.

1. Press the Mode key until the Config indicator lights.
2. Press the right arrow until Z# XXXX is displayed in the message center.
3. Press up/down arrow to change the zero number to match the sticker.
4. Press Enter to save the setting.
5. Press the Mode key to return to Run mode or right/left to go to next/previous parameter.

j. Setting New Span Number for CO_2 Sensors

If a new CO_2 sensor is being installed, the two numbers on the factory installed sticker on the cell must be entered to calibrate the CO_2 in the unit.

Note: For the technician's convenience, a label containing the two numbers on the cell is affixed inside the electronics drawer.

1. Press the Mode key until the Config indicator lights.
2. Press the right arrow until S# XXXX is displayed in the message center.
3. Press up/down arrow to change the span number to match the sticker.
4. Press Enter to save the setting.
5. Press the Mode key to return to Run mode or right/left to go to next/previous parameter.

k. Enabling the High Humidity Feature

In normal operation, the incubator will maintain the humidity level above 80%. If a higher RH level is required, the RH HIGH feature may be turned ON. This allows the heater attached to the humidity reservoir to be enabled, resulting in RH levels above 90%. The factory default for the RH HIGH feature is OFF.

1. Press the Mode key until the Config indicator lights.
2. Press the right arrow until RH HIGH XXX is displayed in the message center.
3. Press up/down arrow to toggle RH HIGH ON or OFF.
4. Press Enter to save the setting.
5. Press the Mode key to return to Run mode or right/left to go to next/previous parameter.

Note: Verify that the ADD WATER alarm is set to ON after enabling the RH HIGH feature.

l. Selecting a Primary Tank w/ Gas Guard Option

On units equipped with the Gas Guard option, a primary tank can be selected. The primary tank will be either Tank 1 or 2. The factory setting is Tank 1 .

1. Press the Mode key until the Config indicator lights.
2. Press the right arrow until Tank Sel X is displayed in the message center.
3. Press the up/down arrow to toggle the setting between 1 and 2 .
4. Press Enter to save the setting.
5. Press the Mode key to return to Run mode or right/left to go to next/previous parameter.

m. Enabling the Gas Guard System

On units equipped with the Gas Guard option, the Gas Guard system may be turned ON or OFF if it is not in use. The factory setting is OFF.

1. Press the Mode key until the Config indicator lights.
2. Press the right arrow until Gas Grd XX is displayed in the message center.
3. Press up/down arrow to toggle the setting ON/OFF.
4. Press Enter to save the setting.
5. Press the Mode key to return to Run mode or right/left to go to next/previous parameter.

n. Setting RS485 Communications Address (1535 compatible only)

On units that have the RS485 option, direct communication with the Model 1535 alarm system can be established. Each piece of equipment connected to the 1535 must have a unique address. An address of 0-24 can be entered for the incubator. A setting of 0 is an invalid address that the 1535 will ignore. The factory setting for the RS485 address is 0.

1. Press the Mode key until the Config indicator lights.
2. Press the right arrow until RS485 XX is displayed in the message center.
3. Press up/down arrow to move the RS485 address.
4. Press Enter to save the RS485 address.
5. Press the Mode key to return to Run mode or right/left to go to next/previous parameter.

Chart 3-1

Configure Mode

Page 1 of 2

Press MODE to light CONFIG

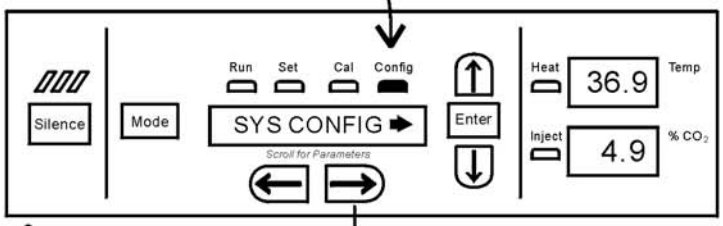

To Configure:

Audible ON/OFF

Press MODE to return to RUN mode

Mode — AUDIBLE XX — Enter

Press ← to return to previous parameter

Scroll for Parameters

Turn ON audible alarm

Press Enter to save the setting

Turn OFF audible alarm

Access Code

Mode — ACC CODE XXX — Enter

Press ← to return to previous parameter

Scroll for Parameters

Numbers increase

Press Enter to save the setting

Numbers decrease

Low Temp Alarm Limit

Mode — TEMP LO XX.XC — Enter

Press ← to return to previous parameter

Scroll for Parameters

Numbers increase

Press Enter to save the setting

Numbers decrease

Temp Relay ON/OFF

Mode — TMP RLY XXX — Enter

Press ← to return to previous parameter

Scroll for Parameters

Enable relay contacts (ON) during temp alarms

Press Enter to save the setting

Disable relay contacts (OFF) during temp alarms

CO_2 % Low Limit

Mode — CO2 LO x.x% — Enter

Press ← to return to previous parameter

Scroll for Parameters

Numbers increase

Press Enter to save the setting

Numbers decrease

refer to next page

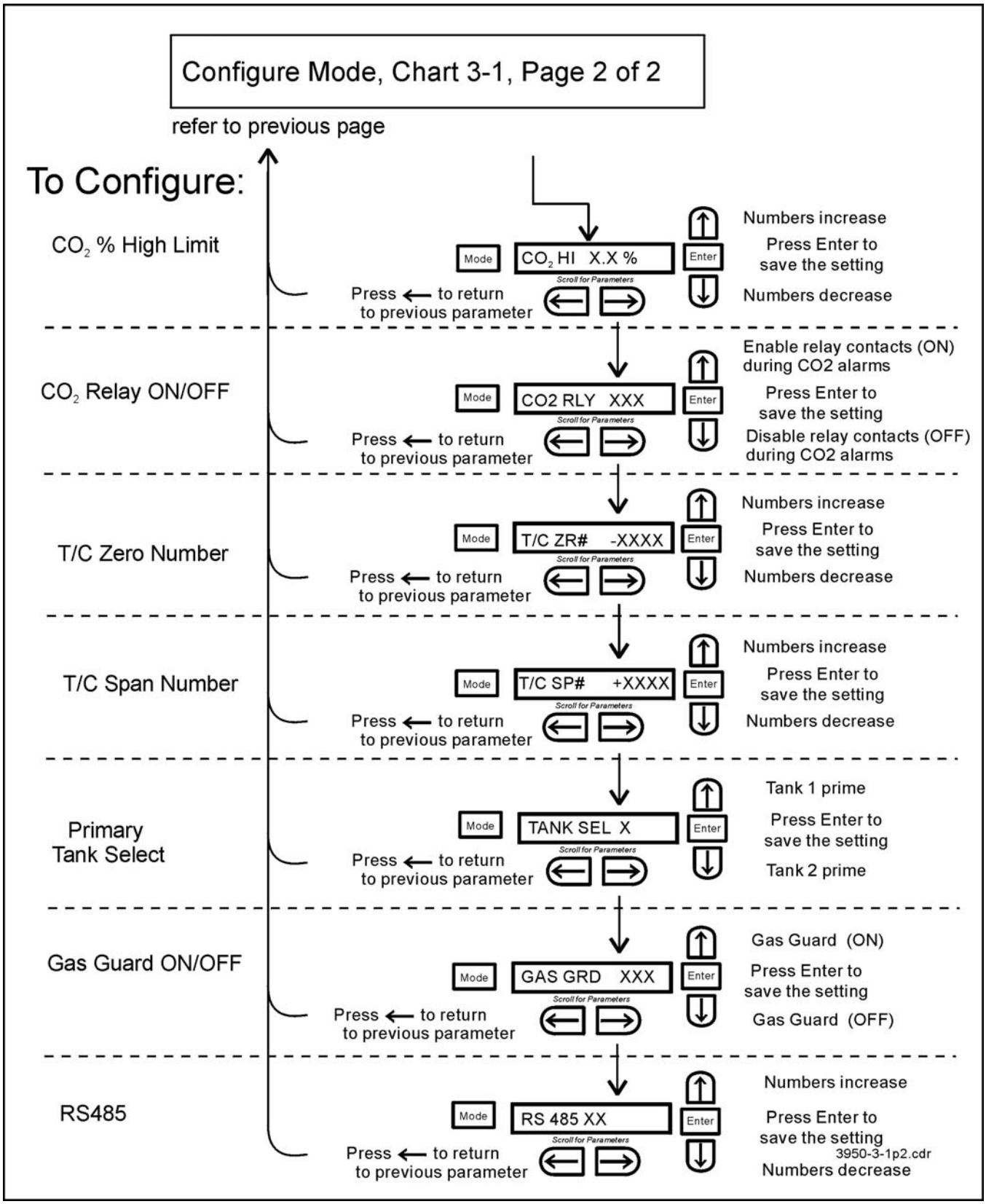
Configure Mode, Chart 3-1, Page 2 of 2
refer to previous page
To Configure:
CO_2 % High Limit
Mode
CO_2 HI X.X %
Enter
Scroll for Parameters
Press ← to return to previous parameter
Numbers increase
Press Enter to save the setting
Numbers decrease
CO_2 Relay ON/OFF
Mode
CO2 RLY XXX
Enter
Scroll for Parameters
Press ← to return to previous parameter
Enable relay contacts (ON) during CO2 alarms
Press Enter to save the setting
Disable relay contacts (OFF) during CO2 alarms
T/C Zero Number
Mode
T/C ZR# -XXXX
Enter
Scroll for Parameters
Press ← to return to previous parameter
Numbers increase
Press Enter to save the setting
Numbers decrease
T/C Span Number
Mode
T/C SP# +XXXX
Enter
Scroll for Parameters
Press ← to return to previous parameter
Numbers increase
Press Enter to save the setting
Numbers decrease
Primary Tank Select
Mode
TANK SEL X
Enter
Scroll for Parameters
Press ← to return to previous parameter
Tank 1 prime
Press Enter to save the setting
Tank 2 prime
Gas Guard ON/OFF
Mode
GAS GRD XXX
Enter
Scroll for Parameters
Press ← to return to previous parameter
Gas Guard (ON)
Press Enter to save the setting
Gas Guard (OFF)
RS485
Mode
RS 485 XX
Enter
Scroll for Parameters
Press ← to return to previous parameter
Numbers increase
Press Enter to save the setting
3950-3-1p2.cdr
Numbers decrease

Section 4 - Alarms

4.1 Alarms

The Model 3950 Series incubator is equipped with a system which notifies the user of an alarm condition inside the incubator. All alarms are displayed in the control panel message center. The following table contains information on all possible systems alarms.

To avoid alarms going off in day-to-day use, some alarms are equipped with a time delay feature. For this to function correctly, the alarm condition must exist for the specified length of time before the message center will display the alarm. This allows for interruptions, such as door openings, to occur without the incubator going into a continuous state of alarm.

When an alarm condition exists, the Silence key can be pressed to temporarily mute the audible alarm. The message center will continue to show the alarm condition. If the alarm condition is not corrected within a specified length of time, the alarm will sound again or “ringback” to remind the user.

When multiple alarm conditions occur, active messages are displayed in the display center one at a time, updating at 5-second intervals. Pressing Silence during multiple alarms causes all active alarms to be muted and to ringback in 15 minutes.

The temperature alarms are disabled when the Temp set point is 10°C. The CO_2 alarms are disabled when the CO_2 set point is 0.0%.

4.2 Sensor Fault Alarms

The microprocessor in 3950 Series incubators continually scans all available sensors to ensure that they are operating properly. Should an error be detected, the incubator will sound an alarm and display the appropriate message. If such an alarm occurs, contact your local distributor or the Technical Services Department at 740-373-4763 or 1-888-213-1790 (U.S.A. and Canada) or fax 740-373-4189.

Description	Message Code	Delay	Ringback	Relay
No alarm condition exists	SYSTEM OK	-----	-----	-----
Temp > Otemp Set point	SYS IN OTEMP	0 min.	15 min.	Yes
Air Temp Sensor Fault (See Section 4.2)	TMP SENS ERR	0 min.	15 min.	No
Temperature Controller Failure (See Section 4.2)	TMP CTRL ERR	0 min.	15 min.	YES
CO_2 Sensor Fault (See Section 4.2)	CO2 SENS ERR	0 min.	15 min.	No
Water Level in Reservoir is Low	ADD WATER	0 min.	15 min.	No
Inner Door is Open	DOOR OPEN	15 min.	15 min.	No
CO_2 > CO2 High Tracking Alarm	CO2 IS HIGH	15 min.	15 min.	Programmable
CO_2 < CO2 Low Tracking Alarm	CO2 IS LOW	15 min.	15 min.	Programmable
TEMP < TEMP Low Tracking Alarm	TEMP IS LOW	15 min.	15 min.	Programmable
Tank 1 is low, switch to Tank 2 (Gas Guard only)	TANK1 LOW	0 min.	----	No
Tank 2 is low, switch to Tank 1 (Gas Guard only)	TANK2 LOW	0 min.	----	No
Both tanks are low (Gas Guard only)	TANK 1 and 2 LOW	0 min.	15 min.	No

- All alarm delays and ringback times are + 30 seconds -

PREVENTIVE MAINTENANCE

Incubators

Your equipment has been thoroughly tested and calibrated before shipment. Regular preventive maintenance is important to keep your unit functioning properly. The operator should perform routine cleaning and maintenance on a regular basis. For maximum performance and efficiency, it is recommended the unit be checked and calibrated periodically by a qualified service technician.

The following is a condensed list of preventive maintenance requirements. See the specified section of the instruction manual for further details.

We have qualified service technicians, using NIST traceable instruments, available in many areas. For more information on Preventive Maintenance or Extended Warranties, please contact us at the number listed below.

Cleaning and calibration adjustment intervals are dependent upon use, environmental conditions and accuracy required.

Tips for all incubators:

- Do NOT use bleach or any disinfectant that has high chloros
- Use sterile, distilled or demineralized water.
- Avoid spraying cleaner on the CO_2 sensor.
- Do not use powdered gloves for tissue cultures.

Millcreek Road, Box 649 • Marietta, Ohio 45750 USA • 740-373-4763
USA and Canada 888-213-1790 • Telefax: 740-373-4189 • http://www.service@thermoforma.com

Preventive Maintenance for 3950 Series Incubators

Refer to Manual Section	Action	Daily	Weekly	Yearly
1.4ie	Check CO_2 tank levels.	✓		
1.6	Check CO_2 and temperature display versus setpoints		✓	
--	Inspect door latch, hinges and door gasket seal.			✓
2.1	* Verify and document CO_2 and temperature calibration			✓
1.4b, 5.3	Perform a complete decontamination procedure. Wipe down interior, shelves and side panels with disinfectant. Drain water reservoir and wipe down with disinfectant. Rinse everything well with sterile distilled water.	Between experiments *More frequent decontamination may be required, depending on use and environmental conditions*		
Figure 6.5	*Change CO_2 filter (under normal conditions)			✓
1.4g	Check operation of the float valve assembly and water level switch			✓

* Qualified service technicians only

Section 5: Maintenance

If the unit has been in service, turn it off and disconnect the power cord connector before proceeding with any maintenance.

Before using any cleaning or decontamination method except those recommended by the manufacturer, users should check with the manufacturer that the proposed method would not damage the equipment.

5.1 Cleaning

The chamber interior may be cleaned with a general-use laboratory disinfectant or alcohol.

The cabinet exterior may be cleaned with soap and water or any non-abrasive commercial glass cleaner. The Thermopane glass door may be cleaned with commercial glass cleaner or with a solution of ammonia and water.

Alcohol, even a 70% solution, is volatile and flammable. Use it only in a well ventilated area that is free from open flame. If any component is cleaned with alcohol, do not expose the component to open flame or other possible hazard.

Do not use strong alkaline or caustic agents. Stainless steel is corrosion resistant, not corrosion proof. Do not use solutions of sodium hypochlorite (bleach) as they may cause pitting and rust.

5.2 Cleaning the Glass Doors

The chamber glass door and the optional independent inner doors may be cleaned using the same disinfectant as used on the incubator interior. It is imperative that they be rinsed with sterile distilled water to remove the disinfectant residue. The doors should then be dried with a sterile soft cloth.

Some precautions in the cleaning and care of the incubator glass doors:

Moisture leaches alkaline materials (sodium, Na) from the surface of the glass. Evaporation of the moisture concentrates the alkaline and may produce a white staining or clouding of the glass surface. Cleaning chemicals with a PH above 9 accelerate the corrosion process. Therefore, it is very important to rinse and dry the glass doors after cleaning.

There is no simple method for repairing corroded glass. In most cases, the glass must be replaced.

5.3 Cleaning the Humidity Reservoir

Periodic cleaning of the humidity reservoir beneath the incubator floor is recommended in order to remove bacteria, fungi or any accumulated mineral deposits.

1. Turn off and/or disconnect the water supply to the humidity reservoir.
2. Attach a drain fitting and hose to the drain port on the back of the unit. Run the hose to an appropriate drain.
3. With an adjustable wrench, remove the brass overflow fitting located at the rear of the humidity reservoir. Allow reservoir to drain. Reservoir holds approximately 4 gallons (15.4 L).
4. Disassemble the hose bracket from the incubator floor.
5. Remove the 8 screws securing the floor. Using the circular black plastic grommet, slide the floor outward to expose the humidity reservoir.
6. Remove any remaining water and sediment from the reservoir with a clean sponge.
7. Clean the reservoir with a general-use laboratory disinfectant. Rinse well with sterile distilled water and wipe dry with a clean cloth.

Note: On reassembly, the brass overflow fitting must be checked for leaks.

Distilled water used in the incubator humidifier reservoir must be within the 50K Ohm to 1M Ohm range to protect and prolong the life of the stainless steel unit.
Use of tap water or distilled water outside the specified range will decrease the operating life of the unit and may void the warranty.

Do not use strong alkaline or caustic agents. Stainless steel is corrosion resistant, not corrosion proof. Do not use solutions of sodium hypochlorite (bleach) as they may cause pitting and rust.

5.4 Replacing the Power Fuses

De-energize all potential sources of energy to this unit and lockout/tagout their controls. (O.S.H.A. Regulation, Section 1910-147.)

High voltage is present behind control panel. The remote overtemp alarm system should be installed only by qualified electrical service personnel.

There are only two replaceable fuses in the incubator.

1. Turn off the incubator's power switch and unplug the power cord.
2. Remove the top of the unit to access the fuses.
3. Refer to Figure 6-5 for the location of the two fuses.
4. Install the top cover and return the unit to service. If the fuse(s) blow after restoring power to the incubator, contact the Technical Services Department at the telephone number on the back cover of this instruction manual.

5.5 Discarding or Taking the Incubator out of Service

Federal regulations require that doors be removed from incubators before units are taken out of service or discarded.

Table 5-1, Fuse Replacement Chart

Fuse Voltage and Application	Manufacturers Part #	Amp Rating	Rupture Speed	IEC Letter Code
115 VAC Accessory Outlet	GMC-1A	1.0 Amp	Time-Lag	T
230 VAC Accessory Outlet	GMC-500mA	0.5 Amp	Time-Lag	T
115 VAC Interior Outlet	GMC-2.5A	2.5 Amp	Time-Lag	T
230 VAC Interior Outlet	GMC-1.5A	1.5 Amp	Time-Lag	T

Section 6 - Factory Options

6.1 Connections to External Equipment

a. Connecting the Remote Alarm Contacts

A set of relay contacts is provided to monitor alarms through a RJ-11 telephone style connector on the back of the unit. Refer to Figure 6-3 for the location of the alarm connector. The 12-foot telephone cord (P/N 190388) and RJ11-to-screw terminal conversion box (190392) are available through the Technical Services Department.

The remote alarm provides a NO (normally open) output, an NC (normally closed) output and COM (common). Refer to Figure 6-1.

The contacts will trip on a power outage or an overtemperature condition. The contacts may also be programmed to trip or not trip on temperature alarms and CO_2 alarms. See Section 3.1, Configuration Mode.

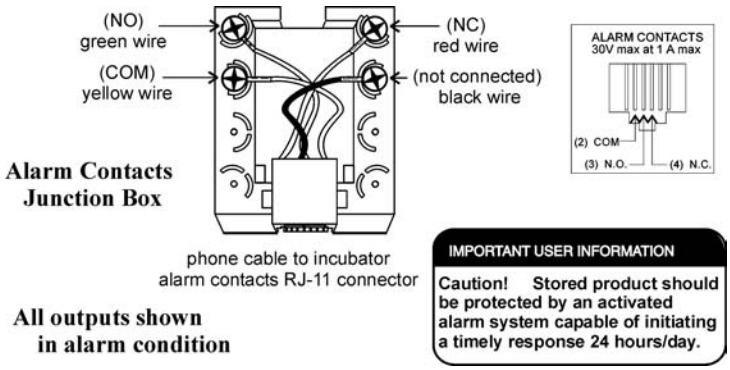

Figure 6-1

b. Connecting the RS485 Interface (190523)

All incubator models can be purchased with the RS485 communications option. This option allows the incubator to be directly connected to a Model 1535 alarm system without the use of a communications module. A junction box is provided with each RS485 option. Refer to Figure 6-2 for wiring details. Figure 6-3 shows the location of the RS485 connector on the back of the incubator.

To allow the incubator and the 1535 to communicate, an address must be allocated on the 1535. Refer to Section 5.8 of the 1535 operating manual. The same address number must be assigned to the incubator. Refer to Section 3.1 of this manual, Configuration Mode.

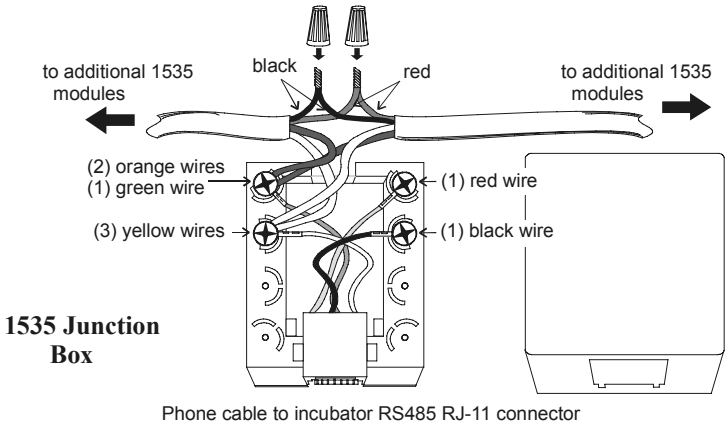

Figure 6-2

c. Connecting the Analog Output Boards (190512, 190543, 190544)

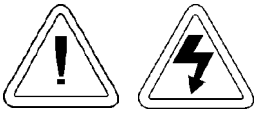

The electronics section contains hazardous voltages. Only qualified electrical service personnel should access this area.

The analog output board is an option that allows the incubator to output analog signals representing the air temperature and CO2 content of the incubator interior. There are three different analog output board options available: 0-1V, 0-5V or 4-20mA signals. Refer to Table 6-1 for output specifications of the three boards.

	190512 4-20 mA Output Scaling 4-20mA Equals	**190544 0-1V** Output Scaling 0-1 V Equals	**190543 0-5V** Output Scaling 0-5V Equals
Temperature	0.0-100.0 °C	0.0-100.0 °C	0.0-100.0 °C
CO_2	0.0-100.0 %CO_2	0-100.0 %CO_2	0-100.0 %CO_2

Table 6-1 Analog Output Board Specifications

Note: Negative display readings will output 0V. The outputs do not have isolated grounds.

To wire in the analog output board, the shielded 22 gauge, 3-conductor wire, Part # 73041, is recommended. This wire is also readily available from other vendors including Alpha, Part #2403, and Deerborn, Part # 972203.

Figure 6-3

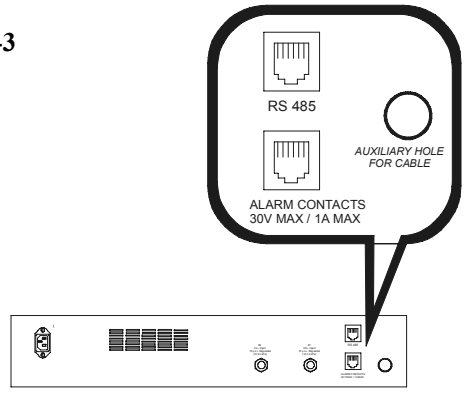

Accuracy of the output at the board terminal strip to the incubator display is ±1 unit. There is no calibration from the incubator. Calibration to the incubator display must be at the instrument connected to the output board.

To access the analog board:

1. Turn off the incubator and disconnect it from the power source.
2. Remove the top of the incubator.
3. Locate the Analog Output board.
4. Strip the ends of the conductor and wire it to the appropriate terminals of connectors J2 on the analog board. Refer to Figure 6-4.

Figure 6-4

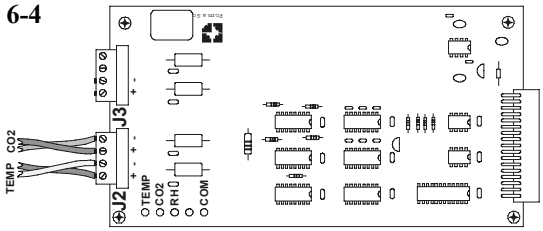

5. Route the wires through the auxiliary hole located on the back of the unit. See Figure 6-3 and Figure 6-5.

Figure 6-5

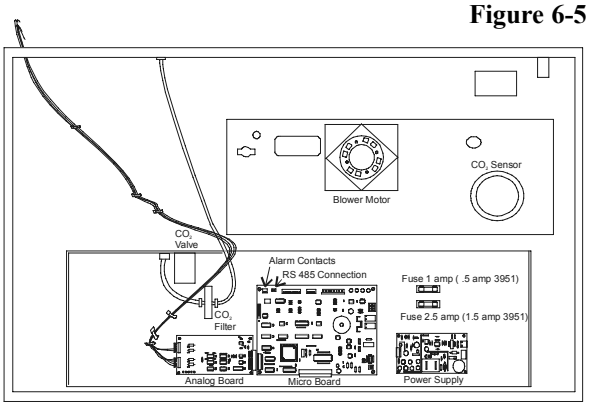

6. When wiring is completed, replace the unit top and return the unit to service.

6.2 CO_2 Gas Guard (1900000)

CO_2 can be lethal in high concentrations. Refer to the warnings in Section 1.4.i of this manual.

The 3950 Series incubators can be equipped with a built-in Gas Guard system that will operate with a CO_2 gas supply. The Gas Guard uses two pressure switches to continuously monitor the pressures of two independent CO_2 supplies and automatically switches from one supply to the other when the supply pressure drops below 10 psig (0. 690 bar). Do not use the Gas Guard with multiple incubators.

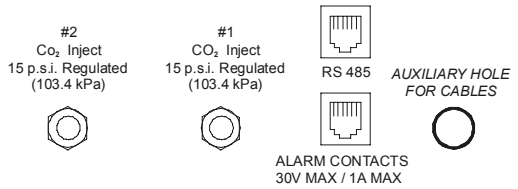

Figure 6-6

The CO_2 gas supplies must be equipped with two-stage pressure regulators with gauges. The high pressure gauge at the tank should have a 0-2000 psig range and the low pressure gauge should have a 0-30 psig range. The gas supply to the incubator must be maintained at 15 psig (1.034 bar). Gas pressures below 15 psig will cause nuisance alarms to occur on incubators equipped with the built-in Gas Guard.

a. Connecting the CO_2 Gas Supplies

The CO_2 inlets for the Gas Guard are located on the back of the unit. Using 1/4” ID tubing, connect one of the CO_2 supply tanks to the fitting labeled CO_2 Inlet #1 Tank. Connect the second CO_2 supply tank to the fitting labeled CO_2 Inlet #2 Tank. Install 3/8” hose clamps to secure the 1/4” ID tubing to the fittings. (Refer to Figure 6-6.)

b. Activating the Gas Guard

The built-in Gas Guard is not turned on when shipped from the factory. The tank selected (Tank Sel) has been specified as Tank 1. Refer to Section 3 Configuration, to activate the Gas Guard or change Tank Sel from #1 to #2. If the Gas Guard system is not used, the incubator functions normally by supplying CO_2 from the supply tank connected to Inlet #1.

c. Operation of the CO_2 Gas Guard

With the Gas Guard in operation, the incubator uses the gas supplied by the tank connected to Inlet #1 until pressure drops below 10 psig (0.690 bars). At this time, the Gas Guard automatically switches to gas supplied through CO_2 Inlet #2.

In addition, the incubator automatically changes Tank Sel in Configuration Mode from 1 to 2 to indicate that the incubator is now using gas supplied through Inlet # 2. If the gas supply to Inlet #1 is replenished, the incubator continues to operate using the gas supplied through Inlet #2 unless the operator changes Tank Sel from #2 to #1 through Configuration Mode. Refer to Section 3, Configuration.

Audible and visual alarms occur on the control panel when the gas guard switches from one supply to the other. The audible alarm sounds until the operator presses the Silence key on the control panel. The visual alarm in the Message Center will read Tank 1 Low while the audible alarm is sounding, but the message will be removed when the operator presses the Silence key. However, the 'Tank Low' indicator on the control panel will stay lighted until the condition is resolved. The unit will operate normally.

Both the audible and visual alarms described above do not ring back once the Silence key is pressed.

If the Gas Guard system does not detect an adequate gas supply at CO2 Inlet #1 or Inlet #2, a visual and audible alarm will again occur on the control panel. The visual alarm in the Message Center will read Tank 1&2 Low. The audible alarm will continue to ring until the Silence key is pressed. The audible alarm will ring back every 15 minutes after the alarm is silenced if the Gas Guard continues to detect that both gas supply pressures are below 10 psig (0.690 bars).

6.3 Inner Doors

Align the shelves and shelf channels with each of the inner doors to facilitate introduction and removal of trays. Clean these doors with the same care as the single door. See Section 5.2.

6.4 Shaker Support Shelves

Shaker support shelves are reinforced and secured to the walls of the incubator. They have a load limit of (1) shaker or 200 pounds per shelf, one shelf being the floor of the unit. The shaker platform limit is 50 pounds. Shakers must not exceed 250 rpm when used inside this incubator. For shaker power connection, an internal outlet in the upper right corner of the back wall is installed. Casters are installed at the factory for moving the cabinet to the desired location. After the unit is in place and prior to operation, the casters must be removed. The large rubber vibration feet, factory installed, are positioned correctly for operation. Do not adjust.

Any equipment placed inside the chamber must be rated for unit operating temperature and

Section 7 – Specifications

7.1 Specifications*

** Specifications are based on nominal voltages of 115V or 230V in ambient temperatures of 22°C to 35°C.*

Temperature

Control:	+0.1°C Microprocessor PID
Setpoint:	Digital – Touch Pad, 0.1°C
Range:	+5°C above ambient to 60°C
Uniformity:	+0.3°C @ +37°C
Tracking Alarm:	User programmable (low) indicator
Overtemp:	Tracking, user programmable, action and indicator
Display:	Digital, LED, 0.1°C increments

Temperature Safety

Type:	Extreme temperature safety, action and indicator
Sensor:	Thermostat, independent of temperature control system
Indicator:	Message center, audible and visual alarms

Relative Humidity

Selectable Ranges:	Medium (>80%), High (>90%)

CO_2

Control:	+0.1% microprocessor PID
Sensor:	Thermal conductivity
Readability:	0.1%
Range:	0 to 20%
Inlet Pressure:	15 PSIG
Display:	Digital LED, 0.1% increments

Shelves

Dimensions:	30.62" W x 25.81" F-B (77.78 cm x 65.56 cm)
Construction:	Solid stainless steel, 2B finish
Surface Area	5.4 sq. ft (0.51 sq. m) per shelf
Max per Chamber:	145.8 sq. ft (13.55 sq. m)
Standard:	5
Maximum:	27
Clearance:	Adjustable on 2" (5 cm) centers

Construction

Interior volume:	29 cu ft (823 liters)
Interior:	304 stainless steel, 2B finish
Exterior:	18-gauge cold rolled steel
Exterior Door:	Heated, triple pane tempered glass
Outer Door Gasket:	Molded vinyl
Insulation:	2” fiberglass

Fittings

Access Port:	2.4” (6.1 cm) ID, one port per side
CO_2 Inlet:	1/4” barbed
Sample Port:	Front mount, 1/4” barbed
Water Inlet:	1/4” MPT for automatic fill
Overflow Drain:	3/8” MPT
Condensate Drain:	3/8” FPT

Electrical

Model 3950:	100-120VAC, 50/60Hz, 1 PH, 10.0 FLA
	Operating Range, including fluctuations- 90-125V, 50-60Hz
	15A Breaker power switch
Model 3951:	200-230VAC, 50/60Hz, 1 PH, 6.0 FLA
	Operating Range, including fluctuations- 180-250V, 50-60Hz
	8A Breaker power switch
Power Switch:	2-pole circuit breaker
Accessory Outlet:	Voltage equal to the cabinet input, 75W max., 0.5mA leakage current
Interior Outlet:	Voltage equal to cabinet input, 230W max, 0.5 mA leakage current
Remote Alarm Contacts:	Deviation of temperature, CO_2 & power. N/O & N/C

Unit BTU Output

115V/230V:	510 BTUH (150W)

Dimensions

Exterior:	38.0” W x 80.0” H x 33.0” F-B (96.5 cm x 203.2 cm x 83.8 cm)
Interior:	31.0” W x 60.0” H x 27.0” F-B (78.7 cm x 152.4 cm x 68.6 cm)
Weight:	500 lbs. (226.8 kg)

Accessories: (CI = Customer Install, FI = Factory Install)

224139	Stainless steel shelf, channels, CI
224155	Perforated shelf kit, CI
190239	Lexan inner door kit, FI
190591	Door cover, FI
190892	Door cover, CI
190164	Thru-wall access port, FI
500182	Reinforced floor with ramp to accommodate cell roller, CI
190777	Reinforced floor with ramp to accommodate cell roller, FI
191596	Carboy kit with 2 gal. carboy and bracket, CI
1900005	Reinforced shelf kit to accommodate Shaker, FI
190514	Door lock, FI
224161	Reinforced shelves, channels 150#, CI
201155	Recorder 0-60°C, 7 day, single pen, 115V, CI
201156	Recorder 0-60°C, 7 day, single pen, 230V, CI
201159	Recorder 0-60°C, 7 day, dual pen, 115V, CI
201160	Recorder 0-60°C, 7 day, dual pen, 230V, CI
1900000	Built-in CO_2 Gas Guard, FI
190512	4-20mA output board, FI
190523	RS-485 interface, FI (compatible with 1535 alarm monitor only)
190543	0-5 volt output board, FI
190544	0-1 volt output board, FI

Certification: 3950 Series - UL, CSA, CE
3951 Series – CSA, CE

Safety Specifications:

Altitude:	2,000 meters
Temperature:	5°C to 40°C
Humidity:	80% RH at or below 31°C, decreasing linearly to 50% RH at 40°C
Mains Supply Fluctuations:	Operating Voltage Range
	Installation Category II
	Pollution Degree 2
	Class of Equipment I

[1] Installation category (overvoltage category) defines the level of transient overvoltage which the instrument is designed to withstand safely. It depends on the nature of the electricity supply and its overvoltage protection means. For example, in CAT II which is the category used for instruments in installations supplied from a supply comparable to public mains such as hospital and research laboratories and most industrial laboratories, the expected transient overvoltage is 2500V for a 230V supply and 1500V for a 120V supply.

[2] Pollution degree describes the amount of conductive pollution present in the operating environment. Pollution degree 2 assumes that normally only non-conductive pollution such as dust occurs with the exception of occasional conductivity caused by condensation.

Section 8 - Spare Parts

Part Number	Description
230135	1 amp fuse (3950 accessory outlet)
230158	2.5 amp fuse (3950 interior outlet)
230120	0.5 amp fuse (3951 accessory outlet)
230106	1.5 amp fuse (3951 interior outlet)
156112	Blower motor 1/30th HP
170164	Motor capacitor 3 MFD, 370VAC
600210	300 watt wire-wound heater
250118	CO_2 solenoid 12V DC
360157	Door switch
360171	Add Water float switch
290138	Temperature control sensor
191563	Microprocessor board
290090	CO_2 sensor
400119	Power supply
190641	Gas guard manifold with pressure switches & valve
980055	Float valve assembly, 100 PSI
515080	Leveler, 2” diameter
227083	Door latch assembly
770001	Inline CO_2 filter
600034	0.375” hose clamp
950013	1/4” vinyl tubing for CO_2 connection
505071	Stainless steel shelf
190012	Stainless steel shelf channel
180006	0 - 60°C chart paper. Single pen recorder
197075	0 - 100°C chart paper, 2 pen recorder
190467	3/8” MPT x 3/8” tube P-trap
380177	3/8” FPT brass elbow

SPECIFICATIONS:

MODEL: 3950 / 3951 REACH-IN INCUBATOR

INTERIOR: 20 GA. STAINLESS STEEL 2-B
EXTERIOR: 18 GA. COLD ROLLED STEEL
PAINT: ANTIQUE WHITE W/ SLATE BLUE TRIM
INSULATION: 2" THICK FIBER GLASS TIW
TEMP RANGE: 5°C ABOVE AMBIENT TO 60°C
TEMP CONTROL: +/- 0.1° C
TEMP UNIFORMITY: +/- 0.3°C @ 37° C
CO2 RANGE: 0 TO 20%
RELATIVE HUMIDITY: MEDIUM (>80%) HIGH (>90%)
ELECTICAL CONNECTIONS:
MODEL 3950 100-120 VAC, 50/60 HZ, 1 PH, 10.0 FLA
MODEL 3951 200-230 VAC, 50-60 HZ, 1 PH, 6.0 FLA

SHELVING: 5 SOLID STAINLESS STEEL SHELVES, ADJUSTABLE ON 2" CENTERS

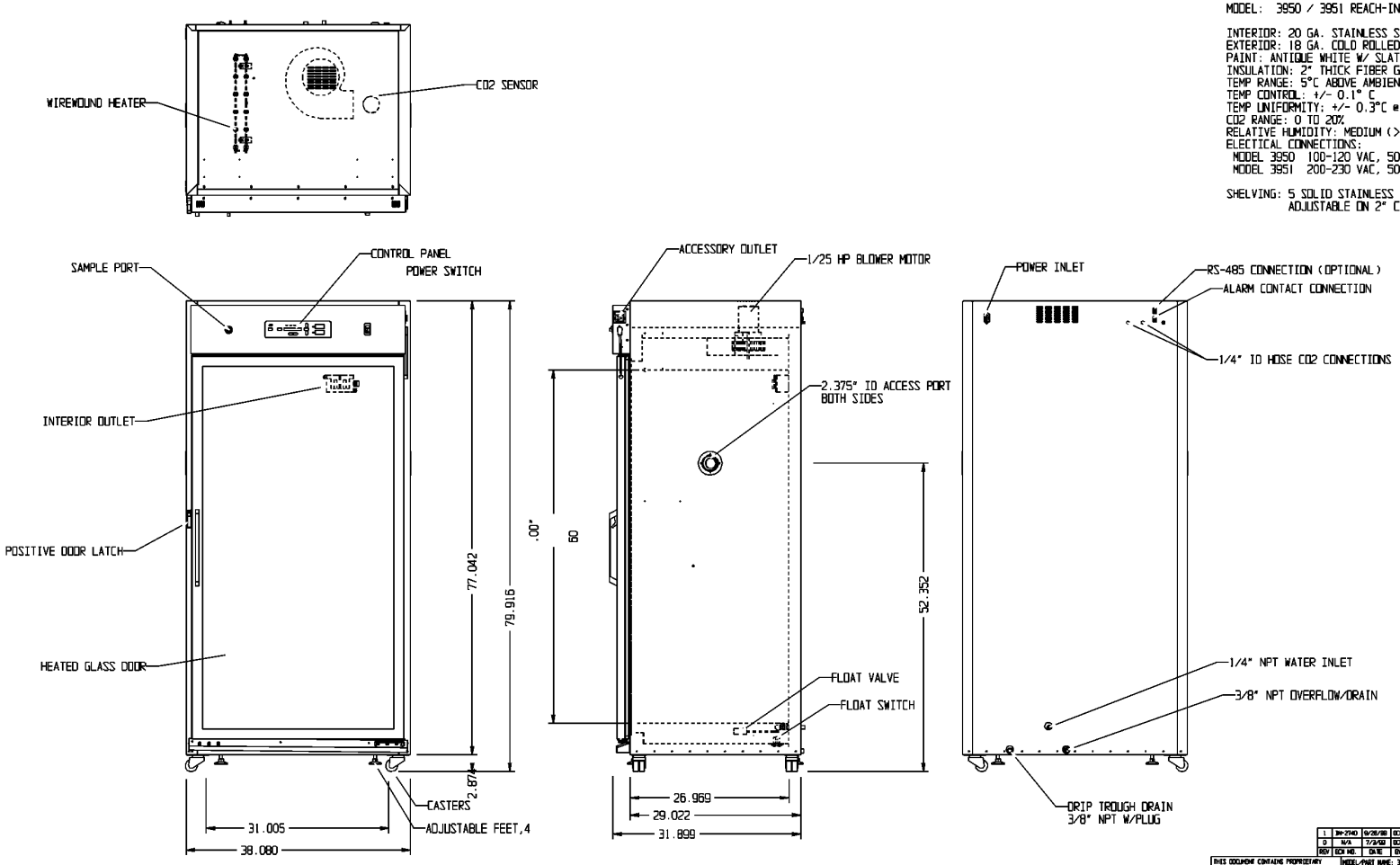

REV	ECN NO.	DATE	BY	CAD APPD	DESCRIPTION OF REVISION
1	IN-2740	9/28/00	DCB	DCB	CHG'D DWG & STAT'S (WAS 3950-00-1)
0	N/A	7/3/02	DCB	DCB	RELEASE FOR PRODUCTION

THIS DOCUMENT CONTAINS PROPRIETARY INFORMATION AND SUCH INFORMATION IS NOT TO BE DISCLOSED TO OTHERS FOR ANY PURPOSES NOR USED FOR MANUFACTURING PURPOSES WITHOUT WRITTEN PERMISSION FROM FORMA SCIENTIFIC

MODEL/PART NAME: 3950 REACH-IN INCUBATOR
DWG TITLE: ASSEMBLY
DWN: GALE | CAD: DCB | APPD: RAH | DATE: 6/23/00 | SCALE: 0.125
MATERIAL: NA
PAINT: N/A

Forma Scientific
Box 640, Marietta, Ohio 45750

TOLERANCE UNLESS OTHERWISE SPECIFIED
ANGLES: ±.5°
DECIMAL: .X=±
.XX=±

DRAWING NUMBER: 3950-00-2
SIZE: D

DWG. NUMBER: 3950-01-1-B

REV	ECN NO.	DATE	BY	CAD	APPD	DESCRIPTION OF REVISION
0	N/A	6/22/99	DCB	DCB	MAH	RELEASE FOR PRODUCTION
1	IN-2740	9/29/99	DCB	DCB	MAH	CHG'D DWG & STK#'S (WAS 3950-07-3)

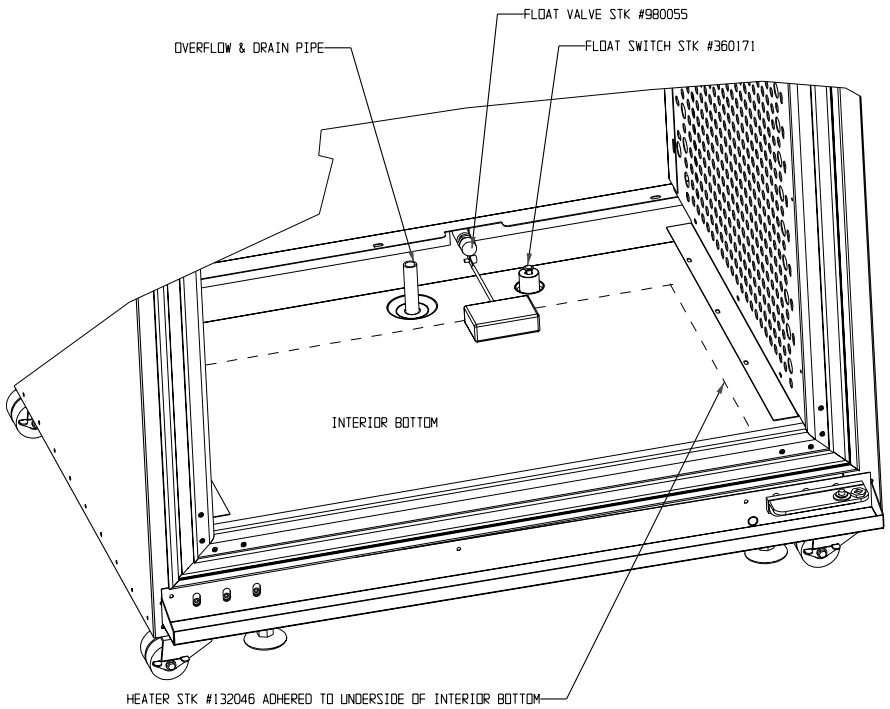

THIS DOCUMENT CONTAINS PROPRIETARY INFORMATION AND SUCH INFORMATION IS NOT TO BE DISCLOSED TO OTHERS FOR ANY PURPOSE NOR USED FOR MANUFACTURING PURPOSE WITHOUT WRITTEN PERMISSION FROM FORMA SCIENTIFIC

MODEL/PART NAME: 3950 REACH-IN INCUBATOR

DWG TITLE: INTERIOR BOTTOM VIEW

DWN: DALE | CAD: DCB | APPD: MAH | DATE: 6/22/99 | SCALE: 0.188

MATERIAL: N/A

PAINT: N/A

TOLERANCE UNLESS OTHERWISE SPECIFIED
ANGLES: DECIMAL: .XX=± .xxx=±

DRAWING NUMBER 3950-01-1

SIZE B

Thermo Forma
Box 649, Marietta, Ohio 45750

DWG. NUMBER: 3950-01-2-B

REV	ECN NO.	DATE	BY	CAD	APPD	DESCRIPTION OF REVISION
0	N/A	6/29/99	DCB	DCB	MAH	RELEASE FOR PRODUCTION
1	IN-2740	9/27/99	DCB	DCB	MAH	CHG'D DWG & STK#'S (WAS 3950-07-5)

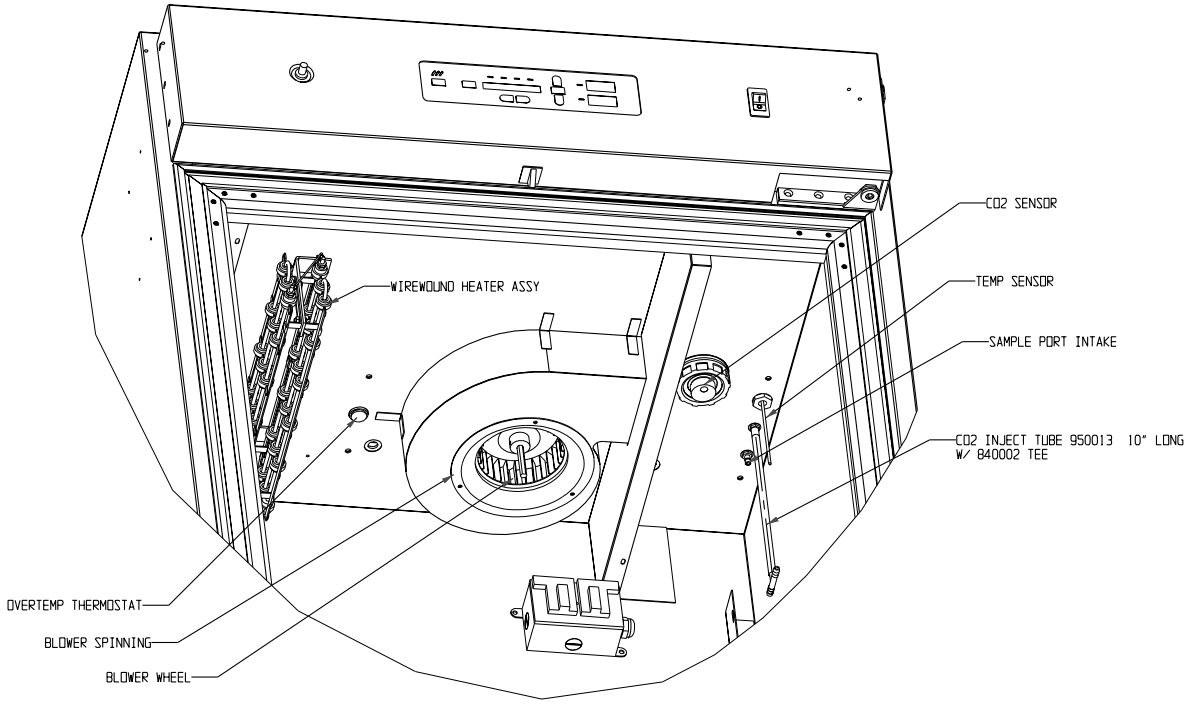

THIS DOCUMENT CONTAINS PROPRIETARY INFORMATION AND SUCH INFORMATION IS NOT TO BE DISCLOSED TO OTHERS FOR ANY PURPOSE NOR USED FOR MANUFACTURING PURPOSE WITHOUT WRITTEN PERMISSION FROM FORMA SCIENTIFIC

MODEL/PART NAME: 3950 REACH-IN INCUBATOR

DWG TITLE: INTERIOR TOP VIEW

DWN: DALE | CAD: DCB | APPD: MAH | DATE: 6/22/99 | SCALE: 0.188

MATERIAL: N/A

PAINT: N/A

Thermo Forma
Box 649, Marietta, Ohio 45750

TOLERANCE UNLESS OTHERWISE SPECIFIED
ANGLES: DECIMAL: .XX=±
.xxx=±

DRAWING NUMBER 3950-01-2

SIZE B

DWG. NUMBER: 3950-01-3-B

REV	ECN NO.	DATE	BY	CAD	APPD	DESCRIPTION OF REVISION
0	NA	6/23/99	DCB	DCB	MAH	RELEASE FOR PRODUCTION
1	IN-2740	9/23/99	DCB	DCB		CHG'D DWG & STK#'S WAS 3950-08-2

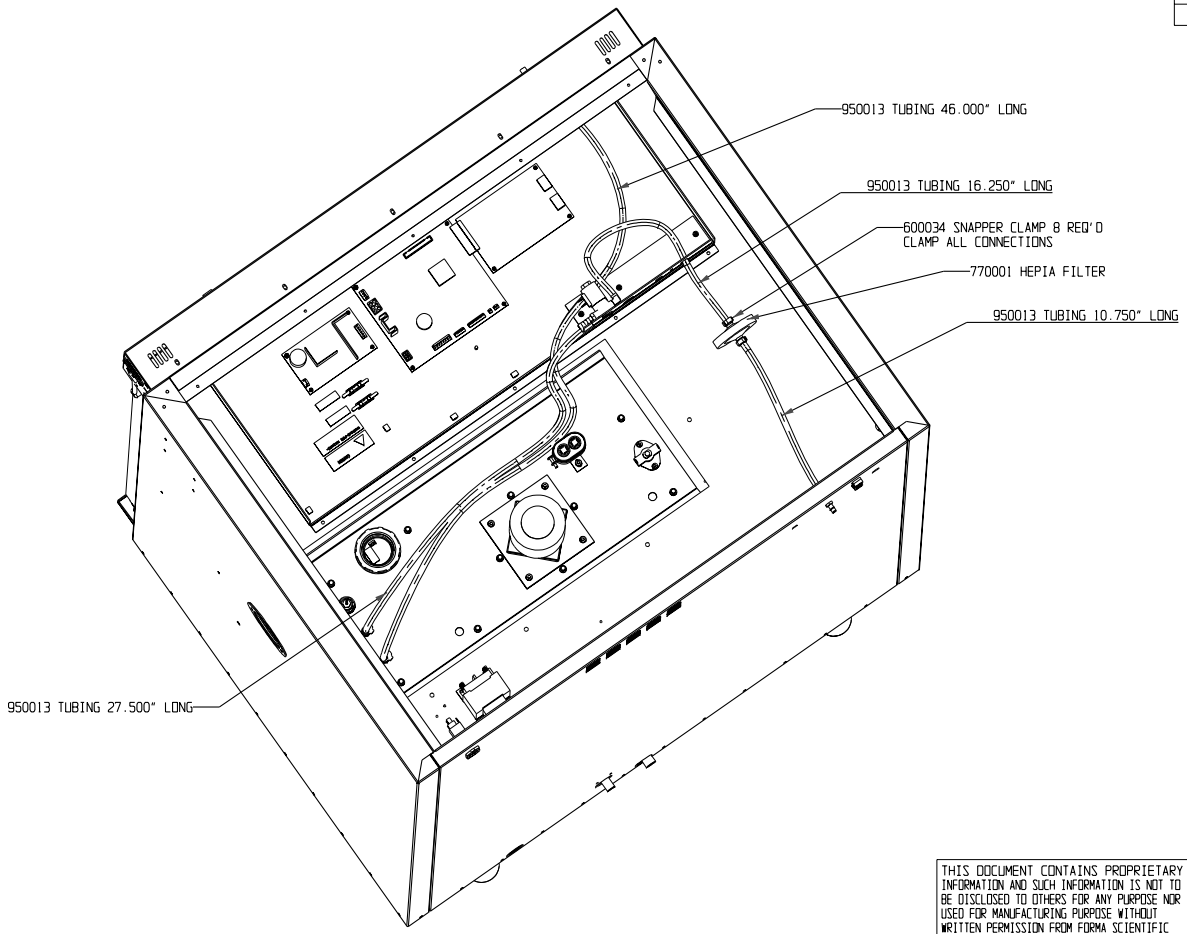

THIS DOCUMENT CONTAINS PROPRIETARY INFORMATION AND SUCH INFORMATION IS NOT TO BE DISCLOSED TO OTHERS FOR ANY PURPOSE NOR USED FOR MANUFACTURING PURPOSE WITHOUT WRITTEN PERMISSION FROM FORMA SCIENTIFIC

MODEL/PART NAME: 3950 REACH-IN INCUBATOR

DWG TITLE: TUBING ASSEMBLY

DWN: DALE | CAD: DCB | APPD: MAH | DATE: 6/22/99 | SCALE: 0.156

MATERIAL: N/A

PAINT: N/A

TOLERANCE UNLESS OTHERWISE SPECIFIED
ANGLES: DECIMAL: .XX=± .xxx=±

DRAWING NUMBER 3950-01-3

SIZE B

Thermo Forma
Box 649, Marietta, Ohio 45750

DWG. NUMBER: 1900000-06-1-B

REV	ECN NO.	DATE	BY	CAD	APPD	DESCRIPTION OF REVISION
0	N/A	6/21/99	DCB	DCB	MAH	RELEASE FOR PRODUCTION
1	IN-2740	9/29/99	DCB	DCB	MAH	REV DWG & STK#'S
2	IN-2740	11-16-99	LW	PDK	LDN	REVISED PART DESCRIPTION

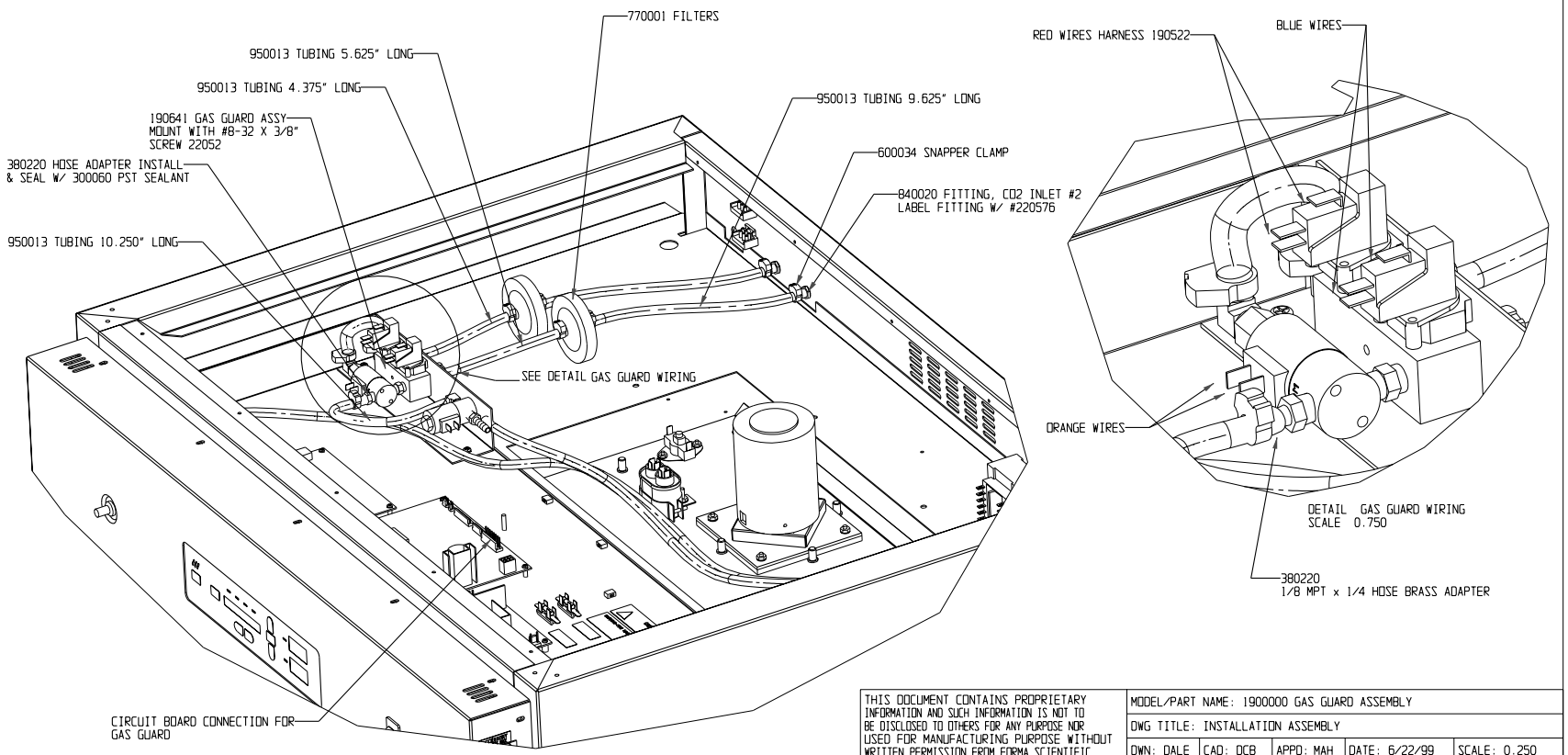

1. WHEN INSTALLED REFER TO TEST PROCEDURE #TPS-3950-140-000-16 FOR TESTING

THIS DOCUMENT CONTAINS PROPRIETARY INFORMATION AND SUCH INFORMATION IS NOT TO BE DISCLOSED TO OTHERS FOR ANY PURPOSE NOR USED FOR MANUFACTURING PURPOSE WITHOUT WRITTEN PERMISSION FROM FORMA SCIENTIFIC

MODEL/PART NAME: 1900000 GAS GUARD ASSEMBLY

DWG TITLE: INSTALLATION ASSEMBLY

DWN: DALE | CAD: DCB | APPD: MAH | DATE: 6/22/99 | SCALE: 0.250

MATERIAL: N/A

PAINT: N/A

Thermo Forma
Box 649, Marietta, Ohio 45750

TOLERANCE UNLESS OTHERWISE SPECIFIED
ANGLES: DECIMAL: .XX=± .xxx=±

DRAWING NUMBER 1900000-06-1

SIZE B

DWG. NUMBER: 3950-08-4-B

REV	ECN NO.	DATE	BY	CAD	APPD	DESCRIPTION OF REVISION
0	IN-2740	12-10-99	LW	PDK	LDN	RELEASED FOR PRODUCTION
1	IN-3048	09-25-02	GJG	KDG	LDN	ADDED (4) 515084 SPACERS

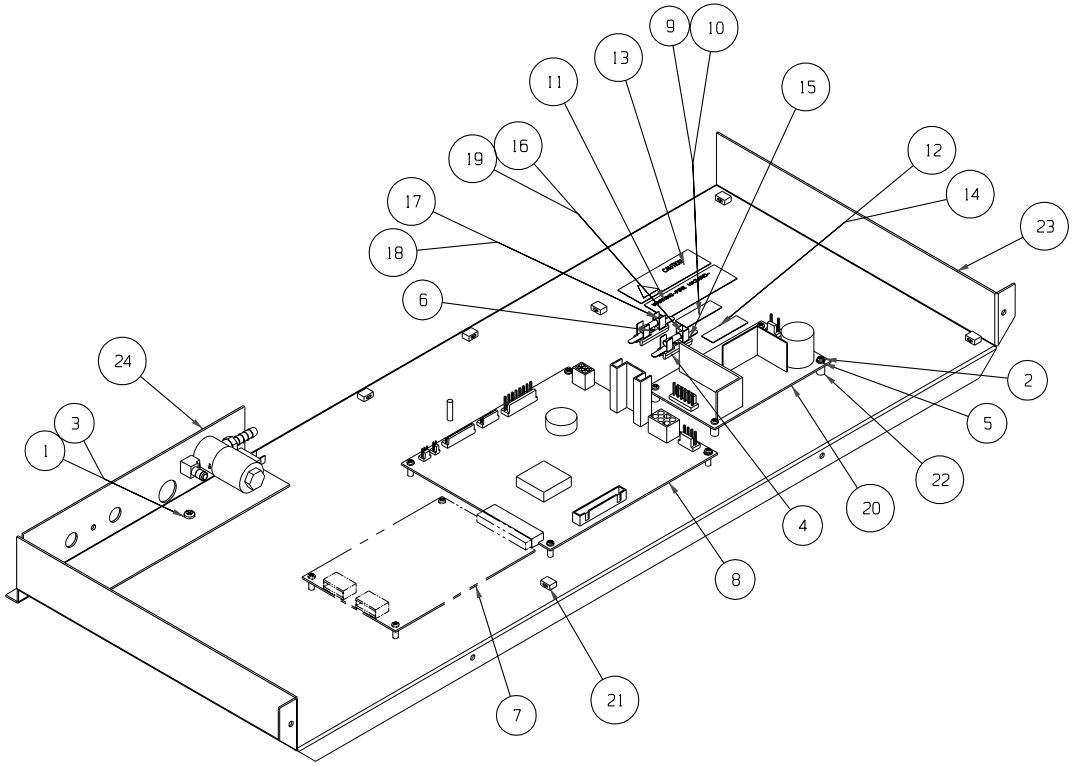

BILL OF MATERIALS

ITEM NO.	PART NO.	PART DESCRIPTION	W/C	QTY
1	22052	#8-32 X 3/8 SS PHP SCREW		3
2	22130	#4-40 X 1/4 SS PHP SCREW		11
3	23002	#8-32 ZP LKWASH HEX NUT		3
4	23006	#4-40 ZP LKWASH HEX NUT		2
5	23029	#4 SS EXT TOOTH LOCKWASHER		2
6	59007	#4-40 X 3/8 SS PHP SCREW		2
7	190571	4-20MA ANALOG BOARD (OPTIONAL)		1
8	191563	3950 MICRO BOARD		1
9	220359	1 AMP FUSE LABEL (3950 ONLY)		1
10	220378	.5 AMP LABEL (3951 ONLY)		1
11	220437	FIRE HAZARD LABEL		1
12	220439	1.5 AMP LABEL (3951 ONLY)		1
13	220555	ESD LABEL		1
14	220569	2.5 AMP FUSE LABEL (3950 ONLY)		1
15	230105	FUSE BLOCK 5 X 22 MM		2
16	230106	FUSE_1.5A_5X22MM (3951 ONLY)		1
17	230120	FUSE_.5A_5X22MM (3951 ONLY)		1
18	230135	FUSE_1A_5X22MM (3950 ONLY)		1
19	230158	FUSE_2.5A_5X22MM (3950 ONLY)		1
20	400119	SWITCHER		1
21	440002	TIE WRAP PUSH-IN ANCHOR		6
22	515084	1/4 DIA. X 3/8L SS SPACER		4
23	1900006-17-3	COMPONENT MOUNT SUB-ASSY		1
24	3950-08-3	SOLENOID VALVE SUB-ASSY		1

THIS DOCUMENT CONTAINS PROPRIETARY INFORMATION AND SUCH INFORMATION IN NOT TO BE DISCLOSED TO OTHERS FOR ANY PURPOSE NOR USED FOR MANUFACTURING PURPOSE WITHOUT WRITTEN PERMISSION FROM THERMO FORMA

MODEL/PART NAME: 3950 REACH-IN INCUBATOR

DWG TITLE: COMPONENT MOUNT ASSEMBLY (3950, 3951)

DWN: DALE | CAD: PDK | APPD: LDN | DATE: 12-10-99 | SCALE: 0.312

MATERIAL:

PAINT: -

Thermo Forma
Box 649, Marietta, Ohio 45750

TOLERANCE UNLESS OTHERWISE SPECIFIED
ANGLES: DECIMAL: .XX=± .XXX=±

DRAWING NUMBER: 3950-08-4

SIZE: B

DWG. NUMBER: 3950-08-5-B

REV	ECN NO.	DATE	BY	CAD	APPD	DESCRIPTION OF REVISION
0	IN-2740	12-10-99	LW	PDK	LDN	RELEASED FOR PRODUCTION

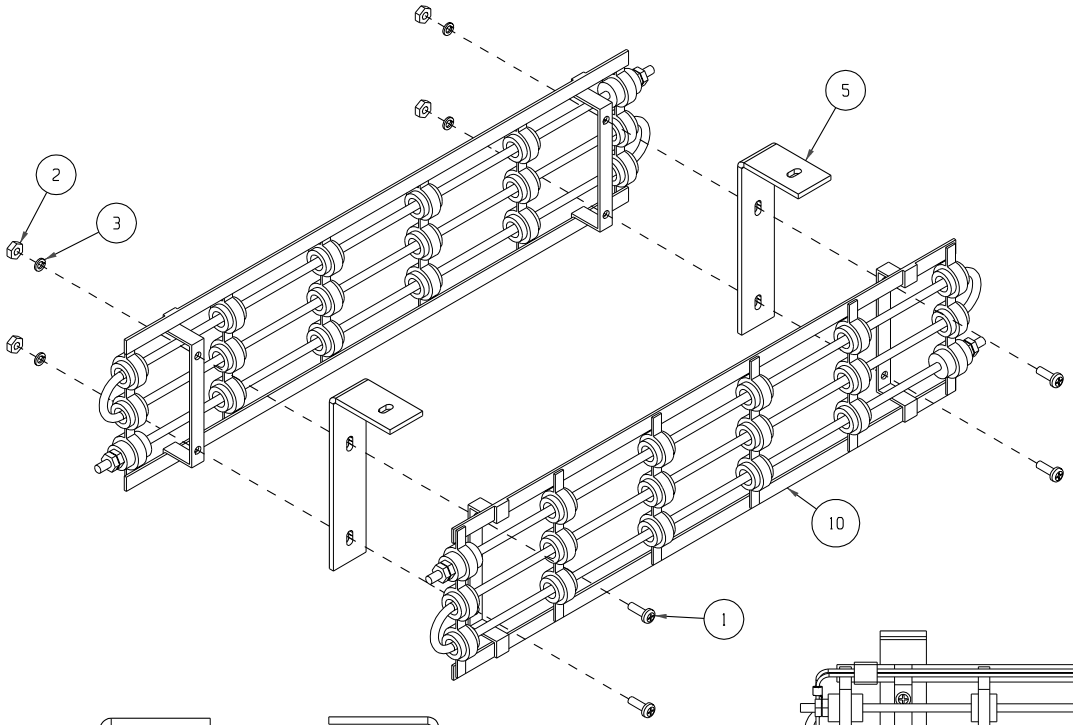

BILL OF MATERIALS

ITEM NO.	PART NO.	PART DESCRIPTION	W/C	QTY
1	22053	#8-32 X 1/2 SS PHP SCREW	379	4
2	23010	#8-32 SS HEX NUT	379	4
3	23080	#8 SS SPRING LOCKWASHER	379	4
4	13018_TAPE	-	379	3
5	1900036-31-1	HEATER MOUNT	379	2
6	191593_BLKW	-	379	1
7	191593_LWTW	-	379	1
8	191593_REDW	-	379	1
9	191593_SWTW	-	379	1
10	600210_HTR	WIREWOUND HEATER 300W 120V	379	2

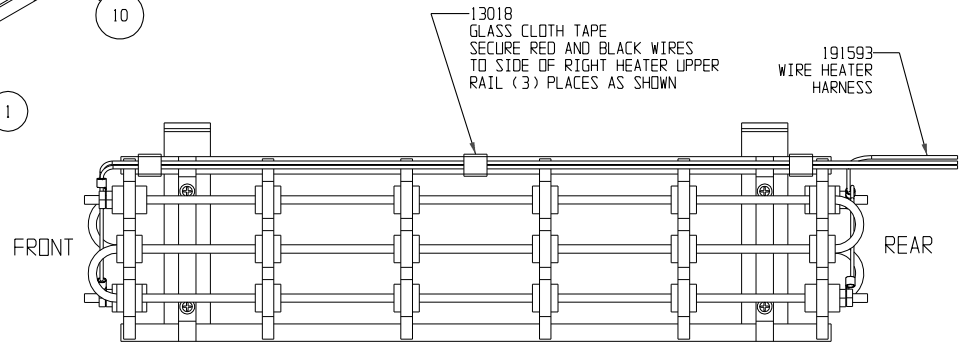

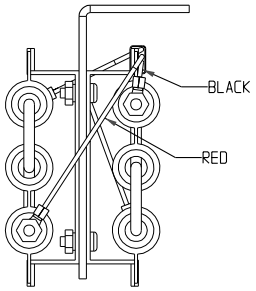

FRONT VIEW
SCALE 0.563

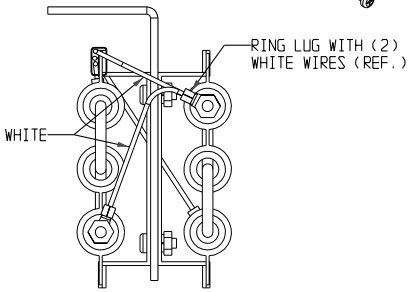

REAR VIEW
SCALE 0.563

THIS DOCUMENT CONTAINS PROPRIETARY INFORMATION AND SUCH INFORMATION IN NOT TO BE DISCLOSED TO OTHERS FOR ANY PURPOSE NOR USED FOR MANUFACTURING PURPOSE WITHOUT WRITTEN PERMISSION FROM FORMA SCIENTIFIC

Thermo Forma
Box 649, Marietta, Ohio 45750

MODEL/PART NAME 3950 SERIES INCUBATOR
DWG TITLE HEATER SUB-ASSEMBLY

DWN MB	CAD PDK	APPD	DATE 12-10-99	SCALE 0.438

MATERIAL
PAINT -
TOLERANCE UNLESS OTHERWISE SPECIFIED
ANGLES: DECIMAL: .XX=± .XXX=±
DRAWING NUMBER 3950-08-5
SIZE B

DWG. NUMBER: 1900007-06-1-B

REV	ECN NO.	DATE	BY	CAD	APPD	DESCRIPTION OF REVISION
0	N/A	5/4/99	DCB	DCB	MAH	RELEASE FOR PRODUCTION
1	IN-2717	7/2/99	DCB	DCB	MAH	ADDED PARTS PER V-RUN
2	IN-2740	9/22/99	DCB	DCB	DNF	CHG'D DWG & STK#'S (WAS 3950-07-1)
3	IN-2740	11/17/99	LW	KDG	LDN	ADDED PROCEDURE NOTES
4	IN-2740	12-08-99	PDK	PDK	LDN	REV. MOTOR SPACER PART NUMBER

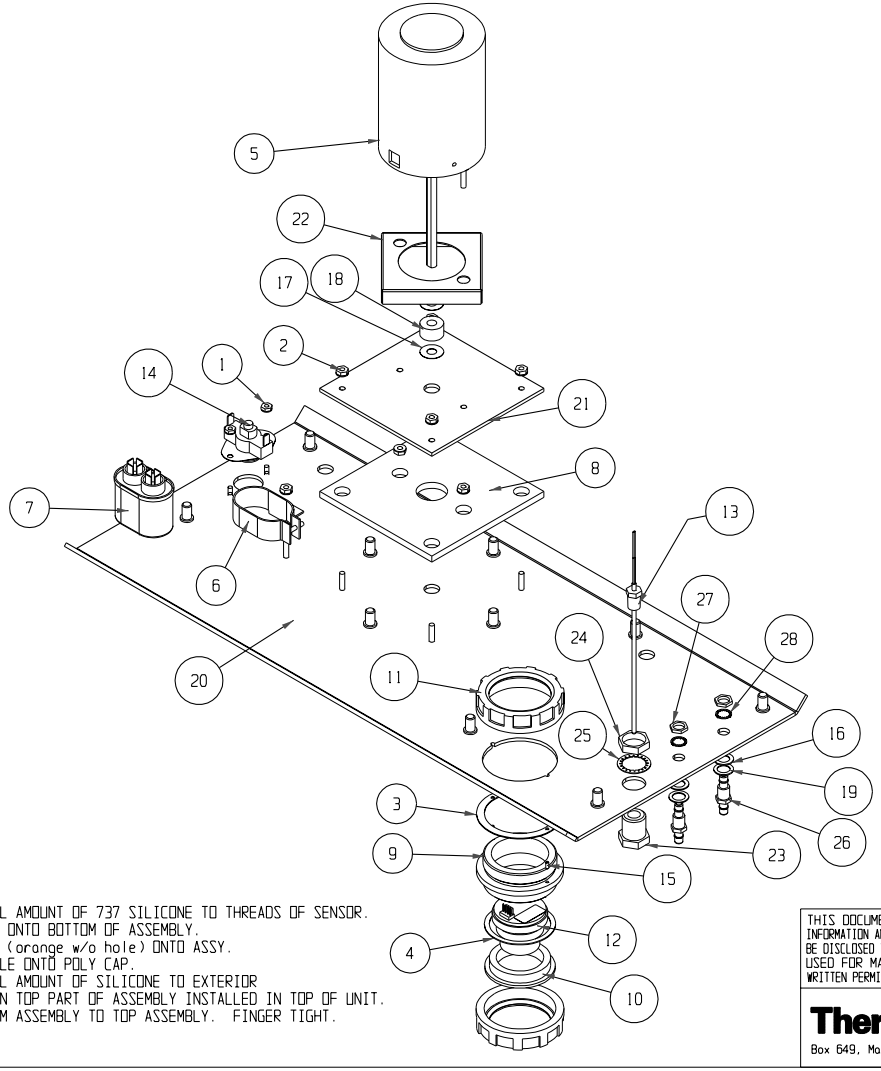

BILL OF MATERIALS

ITEM NO.	PART NO.	PART DESCRIPTION	W/C	QTY
1	23001	#6-32 ZP LKWASH HEX NUT		2
2	23002	#8-32 ZP LKWASH HEX NUT		7
3	103099	SENSOR MOUNT GASKET	N/A	1
4	103100	CO2 CELL ADAPTR GASKET	N/A	1
5	156112	1/30 HP PSC MOTOR	N/A	1
6	170025	CAPASITOR MOUNT	N/A	1
7	170164	3MFD RUN CAPASITOR	N/A	1
8	190151	MTR MNT GASKET .250 X 5 X 5	N/A	1
9	190781	CO2 CELL MOUNT	N/A	1
10	190782	CO2 CELL ADAPTER	N/A	1
11	200125	2 INCH CONDUIT NUT		2
12	290090	TC CO2 SENSOR ASSY	N/A	1
13	290138	THERMISTER PROBE ASSY	N/A	1
14	400141	60T15 THERMOSTAT 180F	N/A	1
15	640046	3/32 X 1/4 DOWEL PIN		2
16	730031	NEOPRENE WASHER		2
17	730053	.312 X .750 WASHER TEFLON	N/A	2
18	730054	.312 X .750 X .375 FELT WSHR	N/A	1
19	730060	.416 SS WASHER		2
20	1900021-06-1	BLOWER MOUNT SUB-ASSY		1
21	1900022-31-1	BLOWER MNT PLATE	N/A	1
22	1900035-31-1	MOTOR SPACER	N/A	1
23	380502 FTG	.125 NPT X .75-20 BLKHD FTG	N/A	1
24	380502 NUT	.750 X 20 BLKHD FTG NUT	N/A	1
25	380502 WSHR	.750 INTL WASHER BLKHD FTG	N/A	1
26	840020 FTG	.250 BULKHEAD FITTING	N/A	2
27	840020 NUT	.375 NUT BLKHD FITTING	N/A	2
28	840020 WSHR	.375 IT WASHER BLKHD FTG	N/A	2

1. APPLY A SMALL AMOUNT OF 737 SILICONE TO THREADS OF SENSOR.
2. SCREW SENSOR ONTO BOTTOM OF ASSEMBLY.
3. PLACE GASKET (orange w/o hole) ONTO ASSY.
4. PLACE ASSEMBLE ONTO POLY CAP.
5. APPLY A SMALL AMOUNT OF SILICONE TO EXTERIOR OF THREADS ON TOP PART OF ASSEMBLY INSTALLED IN TOP OF UNIT.
6. SECURE BOTTOM ASSEMBLY TO TOP ASSEMBLY. FINGER TIGHT.

THIS DOCUMENT CONTAINS PROPRIETARY INFORMATION AND SUCH INFORMATION IN NOT TO BE DISCLOSED TO OTHERS FOR ANY PURPOSE NOR USED FOR MANUFACTURING PURPOSE WITHOUT WRITTEN PERMISSION FROM FORMA SCIENTIFIC

Thermo Forma
Box 649, Marietta, Ohio 45750

MODEL/PART NAME BLOWER MOUNT STOCK #1900007
DWG TITLE BLOWER MOTOR MOUNT ASSY
DWN DALE | CAD DCB | APPDMAH | DATE 2/20/99 | SCALE 0.300
MATERIAL | PAINT N/A
TOLERANCE UNLESS OTHERWISE SPECIFIED
ANGLES: DECIMAL: .XX=± .XXX=±
DRAWING NUMBER 1900007-06-1 | SIZE B

DWG. NUMBER: 1900008-06-1-B

REV	ECN NO.	DATE	BY	CAD	APPD	DESCRIPTION OF REVISION
2	IN-2740	11/17/99	LW	KDG	LDN	ADDED 110008 BLK VINYL CAP
3	IN-2740	12-09-99	LW	PDK	LDN	ADDED 730017 FIBER WASHER
4	IN-2808	06-27-00	WLG	KDG	LDN	CHANGED 515094 SS STANDOFFS TO 127071 ALUM
5	PIP-029	08-28-01	WCW	PDK	LDN	REVISED OUTLET MOUNT
6	IN-3019	02-15-02	WCW	PDK	LDN	CHANGED FROM 22115 & 23030 TO 590027

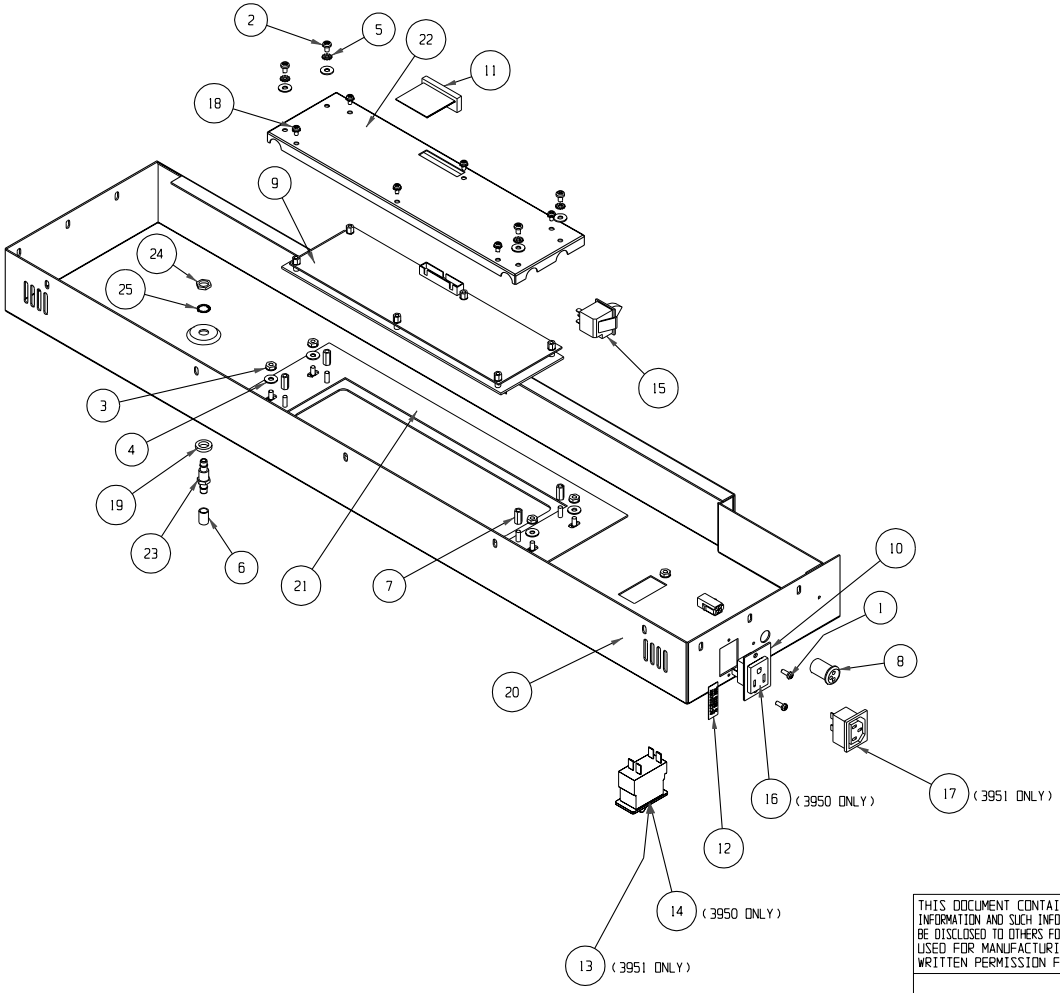

2.INSTALL OUTLET GREEN WIRE TO #8-32 CORNER STUD W/KEPS NUT
1. TAP .106 HOLES (4 EACH) #6-32

BILL OF MATERIALS

ITEM NO.	PART NO.	PART DESCRIPTION	W/C	QTY
1	22049	#6-32 X 3/8 SS PHP SCREW		2
2	22051	#8-32 X 1/4 SS PHP SCREW		4
3	23002	#8-32 ZP LKWASH HEX NUT		5
4	23021	#8 SS FLAT WASHER		8
5	23059	#8 SS EXT TOOTH LOCKWASHER		4
6	110008	BLACK VINYL CAP		1
7	127071	#8-32 x 9/16L ALUM HEX STANDOFF		4
8	189896	DOOR HEATER HARNESS		1
9	190609	INCUBATOR CP ASSEMBLY		1
10	190994	ACCESSORY OUTLET MOUNT		1
11	194021	7" LONG 34 POS CABLE		1
12	220259	ACCESS OULET LABEL		1
13	230178	8 A DPDT RKR CB/SWITCH		1
14	230184	15A DPDT RKR CB/SWITCH		1
15	360157	Momentary Rocker Switch SPDT		1
16	460024	SNAP-IN OUTLET, WHITE		1
17	460138	POWER OUTLET		1
18	590027	#6-32 X 1/4 SS PHP EXT SEMS SCREW		6
19	730017	3/8 BLACK FIBER WASHER		1
20	1900008-16-1	CONTROL PANEL SUB-ASSEMBLY		1
21	1900016-16-1	OVERLAY MOUNT SUB-ASSEMBLY	N/A	1
22	190615-31-1	CONTROL PANEL BRACE & COVER	N/A	1
23	840020_FTG	.250 BULKHEAD FITTING	N/A	1
24	840020_NUT	.375 NUT BLKHD FITTING	N/A	1
25	840020_WSHR	.375 IT WASHER BLKHD FTG	N/A	1

THIS DOCUMENT CONTAINS PROPRIETARY INFORMATION AND SUCH INFORMATION IS NOT TO BE DISCLOSED TO OTHERS FOR ANY PURPOSE NOR USED FOR MANUFACTURING PURPOSE WITHOUT WRITTEN PERMISSION FROM THERMO FORMA

MODEL/PART NAME: REACH-IN INCUBATOR CONTROL PANEL STK #1900008

DWG TITLE: CONTROL PANEL ASSEMBLY (3950, 3951)

DWN: DALE | CAD: DCB | APPD: MAH | DATE: 5/25/99 | SCALE: 0.250

MATERIAL: N/A

PAINT: N/A

TOLERANCE UNLESS OTHERWISE SPECIFIED
ANGLES: DECIMAL: .XX=± .xxx=±

DRAWING NUMBER 1900008-06-1 | SIZE B

Thermo Forma
Box 649, Marietta, Ohio 45750

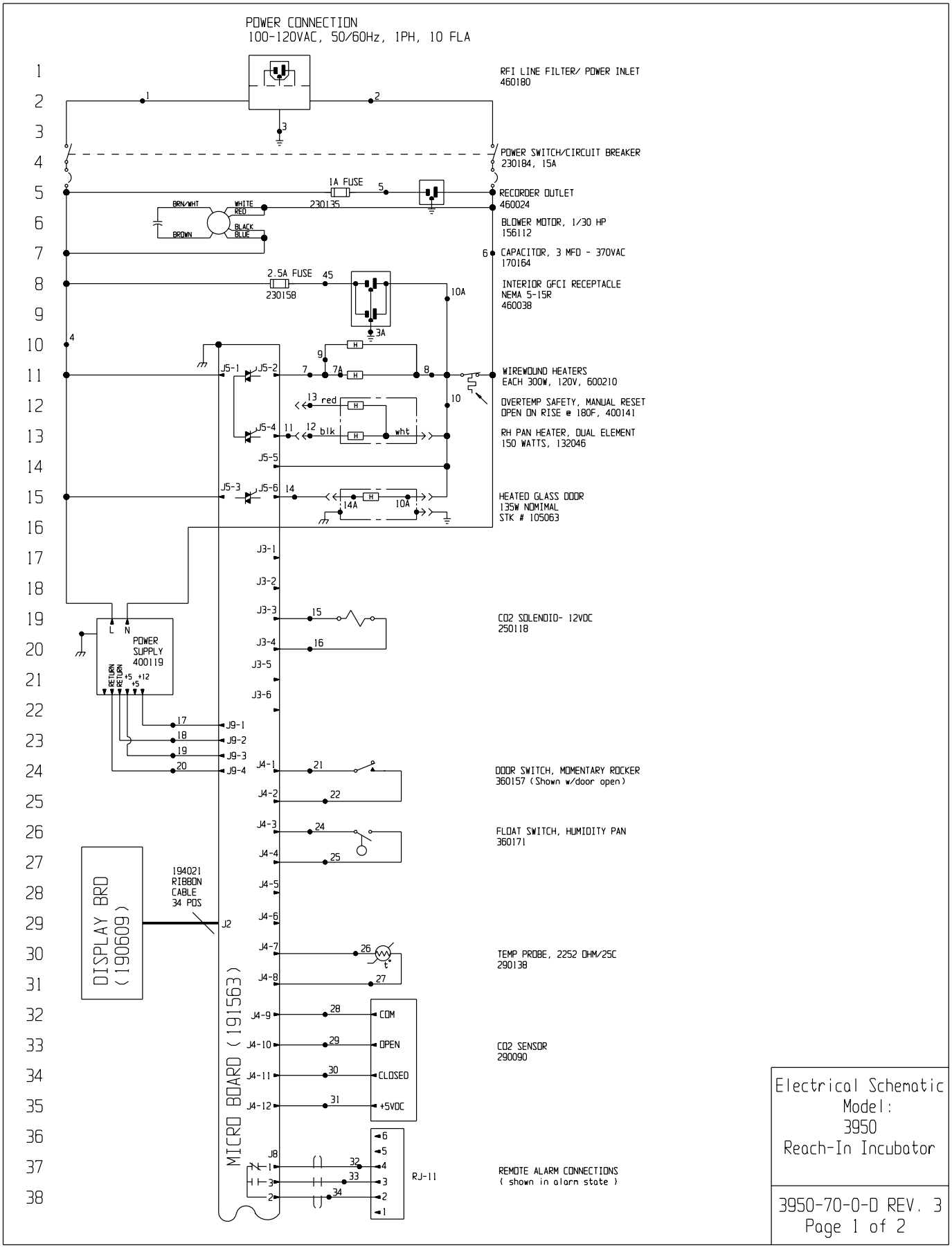
POWER CONNECTION
100-120VAC, 50/60Hz, 1PH, 10 FLA
RFI LINE FILTER/ POWER INLET
460180
POWER SWITCH/CIRCUIT BREAKER
230184, 15A
1A FUSE
230135
RECORDER OUTLET
460024
BRN/WHT
WHITE
RED
BROWN
BLACK
BLUE
BLOWER MOTOR, 1/30 HP
156112
CAPACITOR, 3 MFD - 370VAC
170164
2.5A FUSE
230158
INTERIOR GFCI RECEPTACLE
NEMA 5-15R
460038
WIREWOUND HEATERS
EACH 300W, 120V, 600210
OVERTEMP SAFETY, MANUAL RESET
OPEN ON RISE @ 180F, 400141
RH PAN HEATER, DUAL ELEMENT
150 WATTS, 132046
HEATED GLASS DOOR
135W NOMIMAL
STK # 105063
POWER SUPPLY
400119
CO2 SOLENOID- 12VDC
250118
DOOR SWITCH, MOMENTARY ROCKER
360157 (Shown w/door open)
FLOAT SWITCH, HUMIDITY PAN
360171
DISPLAY BRD
(190609)
194021
RIBBON
CABLE
34 POS
TEMP PROBE, 2252 OHM/25C
290138
MICRO BOARD (191563)
CO2 SENSOR
290090
COM
OPEN
CLOSED
+5VDC
RJ-11
REMOTE ALARM CONNECTIONS
(shown in alarm state)
Electrical Schematic
Model:
3950
Reach-In Incubator
3950-70-0-D REV. 3
Page 1 of 2

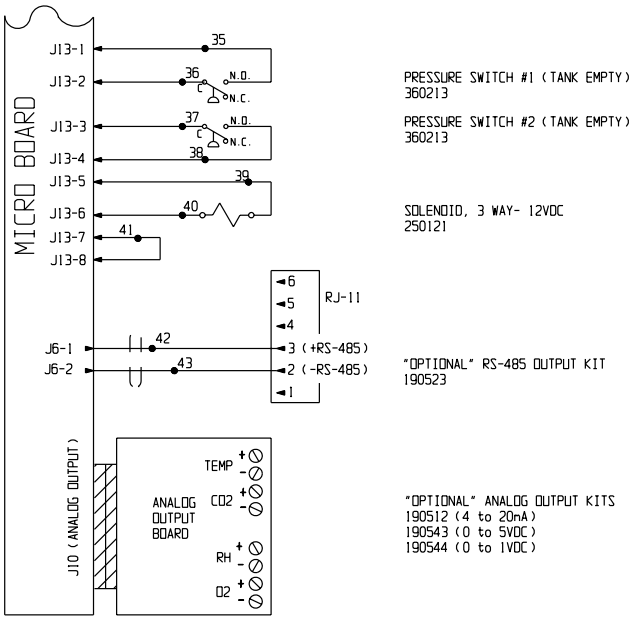

WIRE REFERENCE CHART

NO.	GA.	COLOR	NO.	GA.	COLOR	NO.	GA.	COLOR
1	16	BROWN	21	22	BLUE	42	22/2	RED
2	16	BLUE	22	22	BLUE	43	22/2	BLACK
3	16	GRN/YEL	23					
3A	18	BLACK	24	22	BROWN	45	18	RED
4	16	BLACK	25	22	BROWN			
4A	18	YELLOW	26	22	RED			
5	18	BLACK	27	22	RED			
6	16	WHITE	28	22	GREEN			
7	18	ORANGE	29	22	GRAY			
7A	16	BLACK	30	22	PURPLE			
8	16	WHITE	31	22	ORANGE			
9	16	RED	32	22/3	BLACK			
10	16	GRAY	33	22/3	RED			
10A	18	WHITE	34	22/3	WHITE			
11	18	BLUE	35	20	RED			
12	18	BLACK	36	20	RED			
13	18	RED	37	20	BLUE			
14	18	BROWN	38	20	BLUE			
15	18	YELLOW	39	20	ORANGE			
16	18	YELLOW	40	20	ORANGE			
17	18	RED	41	20	BLACK			
18	18	GREEN						
19	18	ORANGE						
20	18	GREEN						

SENSOR REFERENCE VALUES

CO2 (290090) DIFFERENCE VOLTAGE OF 3-6MV/%CO2
J4-9 & J4-10 TO J4-9 & J4-11

NOTES:

⊛	Denotes Terminal Strip Connection
N/A	Last Relay Number
N/A	Last Terminal Number
45	Last Wire Number

CUSTOMER APPROVAL/REFERENCE
APPROVED BY
APPROVING FIRM
DATE OF APPROVAL

THIS DOCUMENT CONTAINS PROPRIETARY INFORMATION AND SUCH INFORMATION IS NOT TO BE DISCLOSED TO OTHERS FOR ANY PURPOSE NOR USED FOR MANUFACTURING PURPOSES WITHOUT WRITTEN PERMISSION FROM THERMO FORMA

REV	ECN NO.	DATE	BY	CAD	APPD	DESCRIPTION OF REVISION
3	IN-3038	07-01-02	RLM	KDG	CCS	CHG. 285758 OUTLET TO 460038 GFI
2	IN-2869	11-14-00	GJG	GJG	MSB	REVISED DOOR NOTE
1	IN-2717	07-14-99	GLM	POK	M.H.	CORRECT TEMP. PROBE NUMBER
0	N/A	04-22-99	GLM	GLM	M.H.	RELEASED FOR PRODUCTION

DATE 03-18-99 | DWN GLM | CAD GLM | APPDM.H. | SCALE N/A
CUSTOMER MODEL 3950
JOB TITLE REACH-IN INCUBATOR 115 VOLT (DOM.)
DWG TITLE ELECTRICAL SCHEMATIC
LOCATION INCUBATR | JOB NUMBER | DRAWING NUMBER 3950-70-0-D

Electrical Schematic
Model:
3950
Reach-In Incubator

3950-70-0-D REV. 3
Page 2 of 2

ATTENTION
OBSERVE PRECAUTIONS
ELECTROSTATIC
SENSITIVE DEVICES

Thermo Forma
BOX 649, MARIETTA, OHIO 45750

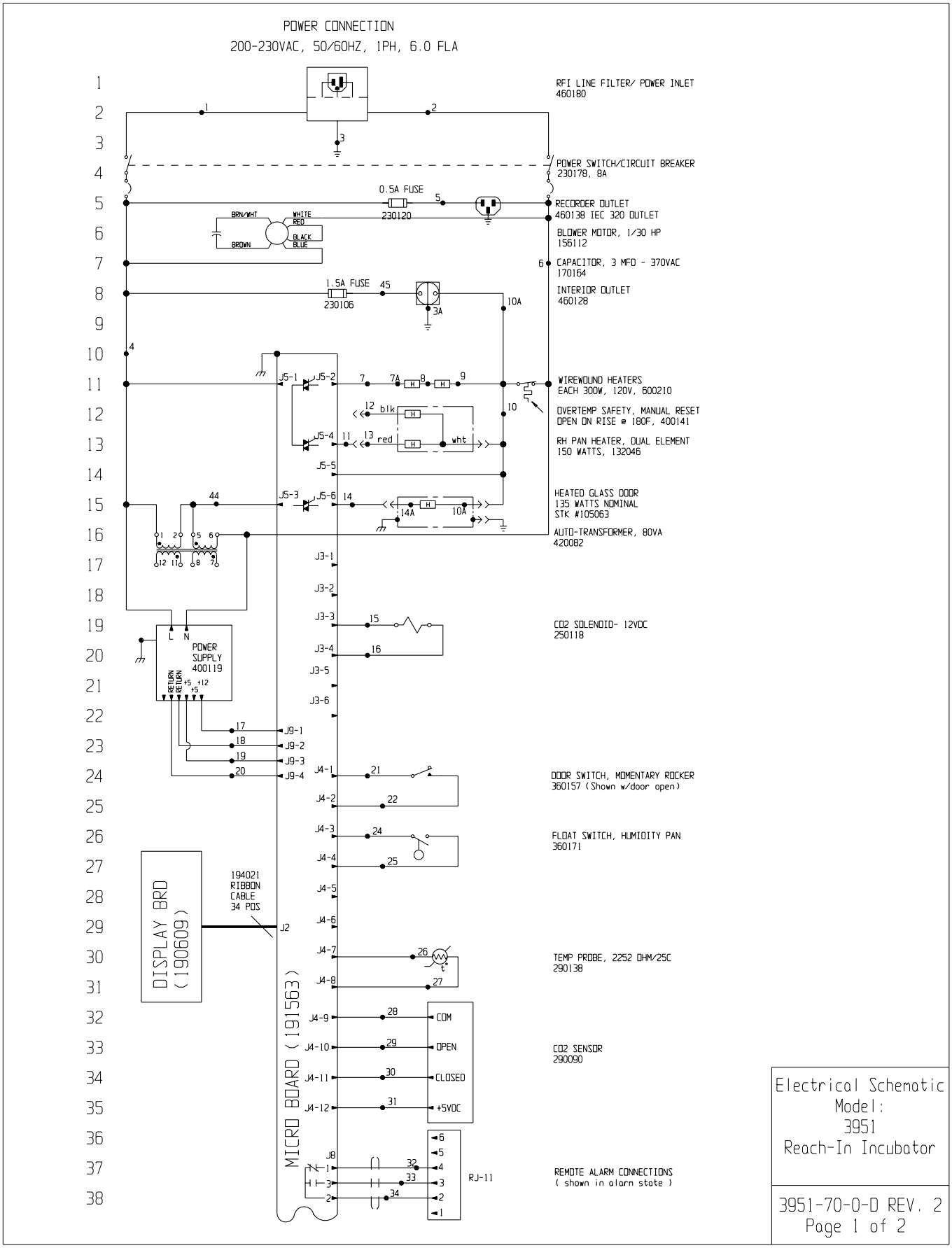
POWER CONNECTION
200-230VAC, 50/60HZ, 1PH, 6.0 FLA
RFI LINE FILTER/ POWER INLET
460180
POWER SWITCH/CIRCUIT BREAKER
230178, 8A
0.5A FUSE
230120
RECORDER OUTLET
460138 IEC 320 OUTLET
BRN/WHT
WHITE
RED
BROWN
BLACK
BLUE
BLOWER MOTOR, 1/30 HP
156112
CAPACITOR, 3 MFD - 370VAC
170164
1.5A FUSE
230106
INTERIOR OUTLET
460128
WIREWOUND HEATERS
EACH 300W, 120V, 600210
OVERTEMP SAFETY, MANUAL RESET
OPEN ON RISE @ 180F, 400141
RH PAN HEATER, DUAL ELEMENT
150 WATTS, 132046
HEATED GLASS DOOR
135 WATTS NOMINAL
STK #105063
AUTO-TRANSFORMER, 80VA
420082
POWER SUPPLY
400119
RETURN
+5
+12
CO2 SOLENOID- 12VDC
250118
DOOR SWITCH, MOMENTARY ROCKER
360157 (Shown w/door open)
FLOAT SWITCH, HUMIDITY PAN
360171
DISPLAY BRD
(190609)
194021
RIBBON
CABLE
34 POS
TEMP PROBE, 2252 OHM/25C
290138
MICRO BOARD (191563)
COM
OPEN
CLOSED
+5VDC
CO2 SENSOR
290090
RJ-11
REMOTE ALARM CONNECTIONS
(shown in alarm state)
Electrical Schematic
Model:
3951
Reach-In Incubator
3951-70-0-D REV. 2
Page 1 of 2

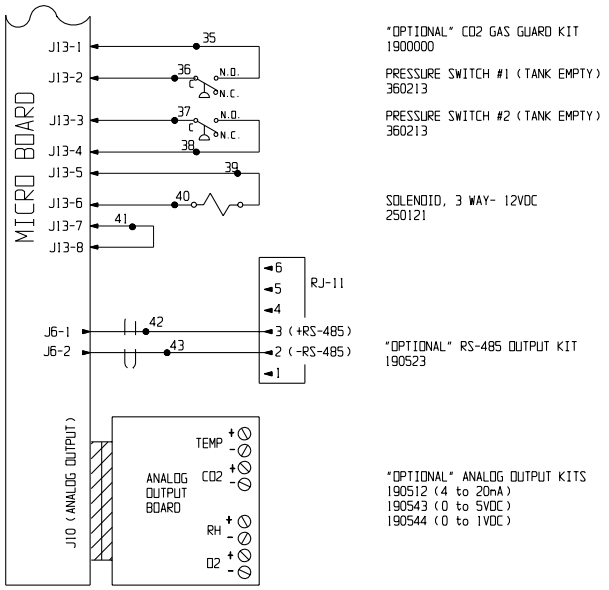

WIRE REFERENCE CHART

NO.	GA.	COLOR	NO.	GA.	COLOR	NO.	GA.	COLOR
1	16	BROWN	21	22	BLUE	42	22/2	RED
2	16	BLUE	22	22	BLUE	43	22/2	BLACK
3	16	GRN/YEL	23			44	18	YELLOW
3A	18	BLACK	24	22	BROWN	45	18	RED
4	16	BLACK	25	22	BROWN			
			26	22	RED			
5	18	BLACK	27	22	RED			
6	16	WHITE	28	22	GREEN			
7	18	ORANGE	29	22	GRAY			
7A	16	BLACK	30	22	PURPLE			
8	16	WHITE	31	22	ORANGE			
9	16	RED	32	22/3	BLACK			
10	16	GRAY	33	22/3	RED			
10A	18	WHITE	34	22/3	WHITE			
11	18	BLUE	35	20	RED			
12	18	BLACK	36	20	RED			
13	18	RED	37	20	BLUE			
14	18	BROWN	38	20	BLUE			
15	18	YELLOW	39	20	ORANGE			
16	18	YELLOW	40	20	ORANGE			
17	18	RED	41	20	BLACK			
18	18	GREEN						
19	18	ORANGE						
20	18	GREEN						

SENSOR REFERENCE VALUES

CO2 (290090) DIFFERENCE VOLTAGE OF 3-6MV/%CO2
J4-9 & J4-10 TO J4-9 & J4-11

NOTES:

⊛	Denotes Terminal Strip Connection
N/A	Last Relay Number
N/A	Last Terminal Number
45	Last Wire Number

CUSTOMER APPROVAL/REFERENCE
APPROVED BY
APPROVING FIRM
DATE OF APPROVAL

THIS DOCUMENT CONTAINS PROPRIETARY INFORMATION AND SUCH INFORMATION IS NOT TO BE DISCLOSED TO OTHERS FOR ANY PURPOSE NOR USED FOR MANUFACTURING PURPOSES WITHOUT WRITTEN PERMISSION FROM FORMA SCIENTIFIC

REV	ECN NO.	DATE	BY	CAD	APPD	DESCRIPTION OF REVISION
2	IN-2869	11-14-00	GJG	GJG	CCS	REVISED DOOR NUMBER
1	IN-2717	07-14-99	GLM	PDK	MSB	CORRECT TEMP. PROBE NUMBER
0	N/A	04-22-99	GLM	GLM	M.H.	RELEASED FOR PRODUCTION

DATE 03-18-99 | DWN GLM | CAD GLM | APPD M.H. | SCALE N/A

CUSTOMER **MODEL 3951**

JOB TITLE **REACH-IN INCUBATOR** 230 VOLT (EXP.)

DWG TITLE **ELECTRICAL SCHEMATIC**

LOCATION	JOB NUMBER	DRAWING NUMBER
INCUBATR		3951-70-0-D

Electrical Schematic
Model:
3951
Reach-In Incubator

3951-70-0-D REV. 2
Page 2 of 2

ATTENTION
OBSERVE PRECAUTIONS
ELECTROSTATIC
SENSITIVE DEVICES

Thermo Forma
BOX 649, MARIETTA, OHIO 45750
TOLL FREE USA 800-848-3080, OHIO 740-373-4763

Thermo Electron Corporation
Controlled Environment Equipment
Millcreek Road, P.O. Box 649
Marietta, Ohio 45750
U.S.A.

Telephone (740) 373-4763
Telefax (740) 373-4189