www.harricksci.com

THE PRAYING MANTIS™

USER'S MANUAL FOR THE THERMO EVOLUTION 200/300/600

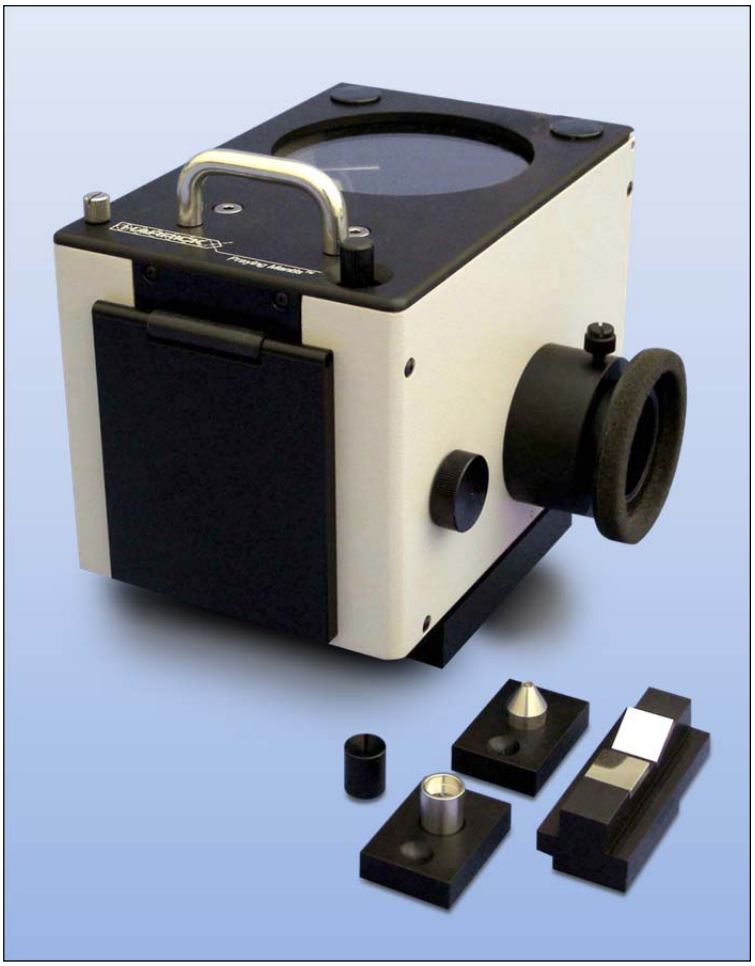

HARRICK SCIENTIFIC PRODUCTS, INC.
141 Tompkins Ave, 2nd floor • Pleasantville, NY 10570 • (800) 248-3847 • FAX (914) 747-7209

Reaction Chamber Maintenance

Appendix A

Appendix B

UNPACKING

Before installing the Praying Mantis™ Diffuse Reflection Accessory make sure all the parts on the included check-off list are present. If any parts are missing or damaged, contact Harrick Scientific immediately.

TECHNICAL SUPPORT

For additional information please contact our Technical Support Center at 800-248-3847 between 9 a.m. and 5 p.m. EST; or e-mail your questions to: techsupport@harricksci.com

FEEDBACK

Your comments and suggestions are welcome. Please send them to:

Harrick Scientific Products, Inc.
PO Box 277
141 Tompkins Ave, 2nd floor
Pleasantville, NY 10570
Phone: 800-248-3847; Fax: 914-747-7209
E-mail: info@harricksci.com
Web: www.harricksci.com

The Praying Mantis™ (DRP) accessory is specifically designed for examining powders by diffuse reflection spectroscopy. The optical design of the Praying Mantis™ incorporates two 6X, 90° off-axis ellipsoid mirrors. The ellipsoids are optically arranged so that their near focal points coincide and they are arranged to discriminate against the collection of specularly reflected radiation. This is achieved by placing the collecting ellipsoid 60° away from the direction of the specularly reflected radiation. The sample is placed in the common focal point of the two ellipsoid mirrors. The beam is condensed to a spot less than 2mm in diameter. This allows analysis of very small quantities of sample. A purge fitting and two purge seals are provided if purging is desired for infrared measurements.

The sample is loaded in to a sample cup. Two cups are included, regular and micro-sampling cups. The sample is typically diluted in a non-absorbing powder. The same non-absorbing powder is used to collect the background spectrum. An optional ambient chamber allows the sample to be loaded in a controlled atmosphere (glove box) and then analyzed without being exposed to room atmosphere.

Two reaction chambers are available for use with Praying Mantis™, the high temperature chamber HVC and the low temperature chamber CHC. The reaction chambers enable a reaction gas to be introduced and reacted with the sample so that the reaction can be studied in situ, reaction rates determined and intermediates and reaction products identified. The reaction chambers are enclosed with a dome with three windows, two for the spectrometer radiation to enter and exit the chamber and the third for viewing, illuminating, or irradiating the sample. This enables the use of the reaction chambers for photochemical studies. The standard material for all three windows is UV quartz. Replacement domes with infrared windows (ZnSe, KBr, etc) are available for use with the same Praying Mantis™ in a FTIR instrument.

OPEN BEAM SPECTRUM

Prior to installation:

- Make sure all sample holders and accessories are removed from the sample compartment.
- Set the spectrometer to %T mode.
- Collect a 100%T baseline with no accessory in the sample compartment. This spectrum should be used later to verify the throughput of the Praying Mantis™.

GETTING READY

Before installing the Praying Mantis™, familiarize yourself with the accessory and its various components by referring to the drawing of the Praying Mantis™ found below (Figure 1).

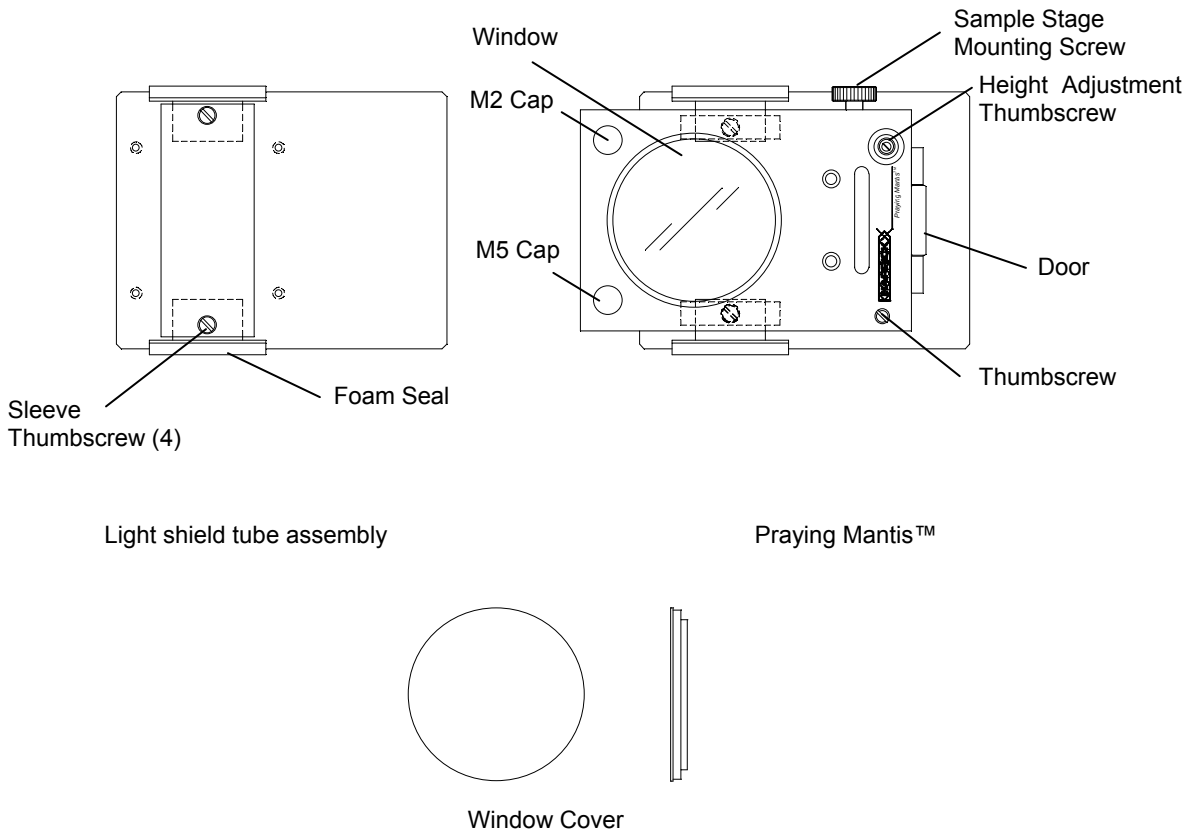

Figure 1 • Praying Mantis™ Components

INSTALLING THE REFERENCE BEAM LIGHT SHIELD

- Orient the light shield tube assembly so the slots in the sides of the base plate are close to the two pins in the reference beam portion of the sample compartment.
- Push the accessory slightly down and forward against the front pin of the snap-in mount to latch the accessory in place.
- Loosen the thumbscrews and push the sleeves out to make a seal with the sides of the sample compartment (Figure 2).

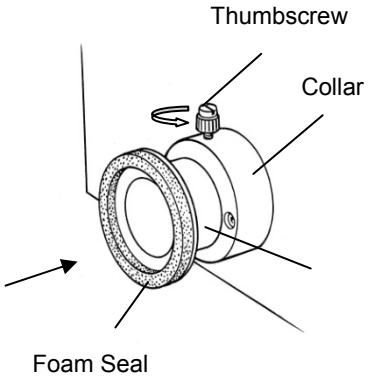

Figure 2 • Sleeves

INSTALLING THE PRAYING MANTIS™

- Orient the Praying Mantis™ so the slots in the sides of the base plate are close to the two pins in the sample beam portion of the sample compartment.
- Push the accessory slightly down and forward against the front pin of the snap-in mount to latch the accessory in place.
- Make sure that the base plate rests firmly in the spectrometer.
- Extend the sleeves to the walls of the spectrometer and tighten the thumbscrews on the collars.
- Place the supplied magnet as shown to disable the lock magnetic switch.

CAUTION:
All of the mirrors on the interior of the Praying Mantis™ are front-surface aluminum and they scratch easily. Wearing cotton gloves while extending the collars is recommended to reduce the possibility of damaging the mirrors with an accidental finger touch.

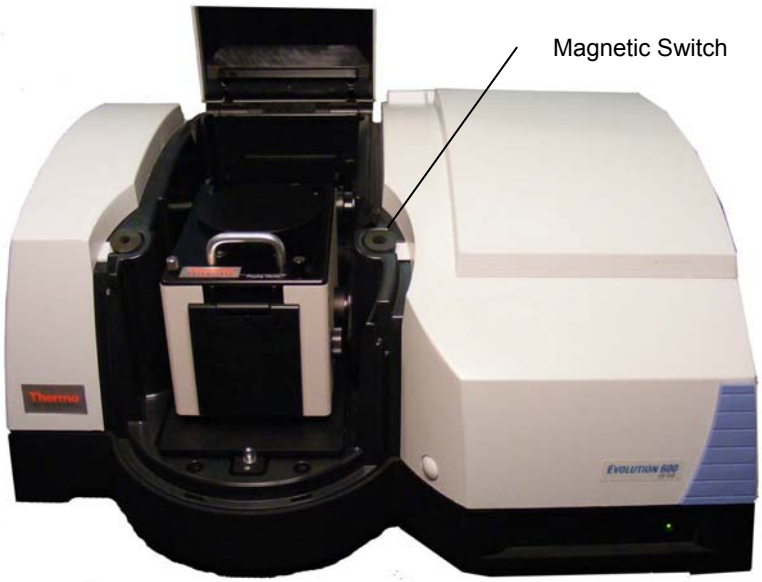

Figure 3 • Praying Mantis™ installed in the Thermo Scientific Evolution spectrophotometer

ALIGNING THE PRAYING MANTIS™

The Praying Mantis™ has been pre-aligned prior to shipment. Hence it requires only minor adjustments to optimize its performance.

- Remove the standard sampling cup (Figure 4) from the sampling accessories package and clean the cup if needed.
- Using tweezers, grasp the white Spectralon reference on its round edge and then place it in the sample cup
- Open the door on the front of the attachment (Figure 1).
- Slide the sampling cup into the Praying Mantis™.
- Gently push the sample cup in against the stop.

CAUTION:
Do not touch the flat surfaces of the Spectralon disk. Doing so risks damaging and/or contaminating the sampling surfaces.

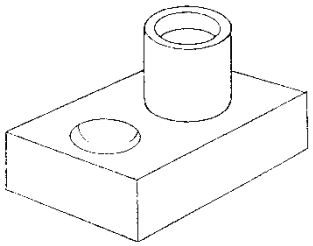

Figure 4 • Standard Sampling Cup

- Remove the plastic caps over mirrors M2 and M5. This allows access to the turn and tilt adjustments for these mirrors (Figure 5).
- In VISIONpro, under the Command Menu, choose White Light.
- Adjust the turn and tilt controls for M2 with the supplied 3/32" hex driver until the white light is centered on the Spectralon disk.
- In VISIONpro, select OK to continue.
- Then choose Optical Alignment from the Command Menu.

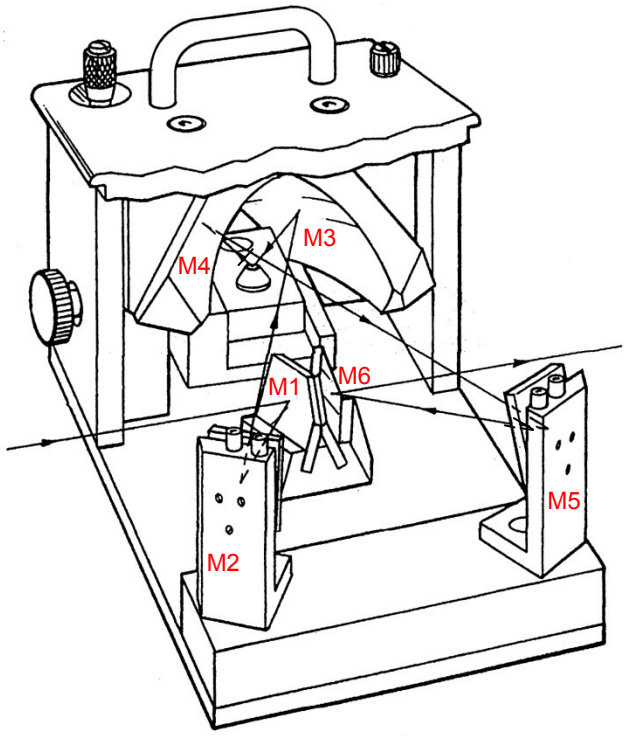

Figure 5 • Interior View of the Praying Mantis™

- Replace the sampling cup with the alignment fixture (Figure 6).Slide the alignment fixture into the Praying Mantis™, with the horizontal mirror going in first. In this orientation, the tilted mirror is in the sampling position.
- Gently push the alignment fixture in against the stop.
- Adjust the turn and tilt controls for M5 with the supplied 3/32” hex driver until the signal on the detector is maximized.
- Adjust the height of the alignment fixture with the height adjustment thumbscrew to maximize the signal.
- Repeat this sequence until there is no further increase in the signal on the detector.

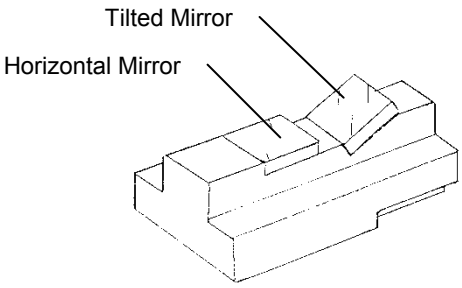

Figure 6 • Alignment Fixture

VERIFYING THE THROUGHPUT

- Place the supplied window cover over the window in the top of the Praying Mantis™ or close the spectrometer cover.
- Collect the sample spectrum for the throughput measurement.

NOTE: To maximize the performance of your accessory, it should be tested before first use and at regular intervals thereafter.

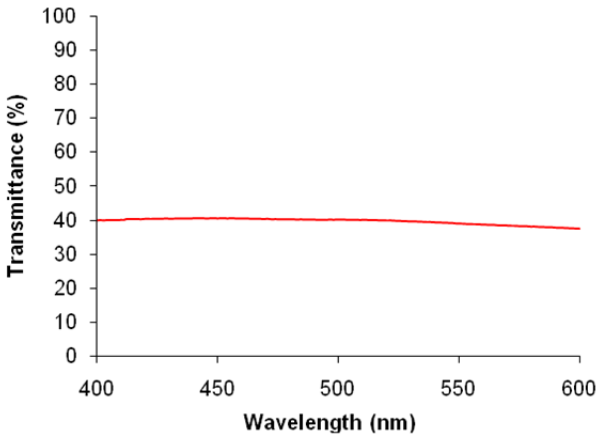

Figure 7 • Praying Mantis™ Throughput

- Read the maximum value at 550nm.
- The Praying Mantis™ throughput at that wavelength should be at least 30% and the spectrum should resemble the Praying Mantis™ throughput spectrum shown in Figure 7.

SPECULAR REFLECTANCE

- Slide the alignment fixture (Figure 6) into the Praying Mantis™, with the tilted mirror going in first. In this orientation, the horizontal mirror is in the sampling position.
- Gently push the alignment fixture in against the stop.
- The detector now measures the specular reflectance from the mirror. The energy should be near-zero. If it is not, rotate the height adjustment knob no more than one rotation to see if the specular reflectance can be further minimized.
- Collect another sample spectrum. The throughput should be less than 10%. If it is not, realign with the tilted mirror or contact Harrick Scientific.

BASELINE SPECTRUM

- Select a suitable reference material. The included Spectralon disk can be used in the standard sampling cup as a UV-VIS reference.
- If the reference is a powder, overfill one of the sampling cups (Figure 8) with the reference and level off the surface using a flat blade.
- Open the door and slide the sample holder (with the sampling cup going in first) into the Praying Mantis™, pushing it in against the stop.
- Close the door.
- In VISION*pro*, under the Command Menu, choose Optical Alignment.
- Make small adjustments to the height of the sample using the appropriate thumbscrew to maximize the signal on the detector.
- Open the front door of the accessory and verify that the beam is a tightly focused spot falling entirely on the surface of the referencel. If it is not and the accessory has not been aligned recently, confirm that the accessory is correctly aligned. Otherwise adjust the stage height until the focused beam falls entirely on the reference.
- Collect the baseline spectrum.

NOTE: *For best results, the reference material, a non-absorbing powder or rough surfaced solid, should be ground as finely as possible and packed tightly into the sample cup.*

A spectrum of Spectralon is shown in Appendix A for reference..

Microsampling Cup Standard Sampling Cup

Figure 8 • Sampling Cups

SAMPLE SPECTRUM

- Replace the reference material with the sample.
- Record the sample spectrum.

NOTES: *The collected sample spectrum is the ratio of the diffuse reflectance of the sample to the diffuse reflectance of the reference.*

If the powdered sample is a strong absorber it may need to be diluted (approximately 5%) in a nonabsorbent matrix.

USING THE OPTIONAL AMBIENT SAMPLE CHAMBER

- Before using the ambient chamber, verify that the windows, o-ring and groove on the bottom of the dome are clean and free of dust.
- Put the ambient chamber in a glove box or similar enclosed environment.
- Unscrew the two thumbscrews to remove the dome.
- Carefully fill the sample cup with the reference. Clean up any spills.
- Install the dome making sure that the larger orientation slot on the dome engages the orientation pin on the ambient chamber.

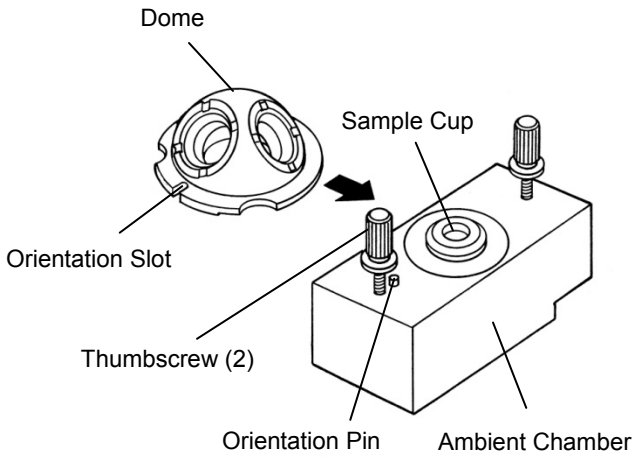

Figure 9 • The Ambient Chamber

- Remove the sealed ambient chamber from the glove box.
- Open the door and slide the ambient chamber into the Praying Mantis™, orienting it so that the two notches on the bottom of the ambient chamber go in first.
- Close the door.
- In VISION*pro*, under the Command Menu, choose Optical Alignment.
- Make small adjustments to the height of the sample using the appropriate thumbscrew to maximize the signal on the detector.
- Record the baseline spectrum.
- Replace the reference material with the sample.
- Record the sample spectrum.

ABOUT THE HIGH TEMPERATURE REACTION CHAMBER (HVC)

The HVC is designed for operation up to 910°C under vacuum (the lifetime of the heater is significantly reduced at temperatures above 450°C). The pressure range is from high vacuum to pressures up to 3.44MPa or 25.8 ktorr (the high pressure dome is required for pressures above 133 µPa or 1 ktorr). At higher pressures, the maximum operating temperature may be lower.

HVC is made of chemically resistant 316 stainless steel. Within the chamber is a temperature-controlled sample stage with integral sample cup. This stage incorporates a cartridge heater and a thermocouple. It is thermally isolated from the outer chamber wall. A water-cooling jacket controls the temperature of the outer surface of the chamber and windows during high or low temperature operation. The reaction chamber has three gas ports for evacuating, pressurizing or flowing gas through the sample. These ports are equipped with 1/4" VCO fittings. The vacuum port leads directly under the sample cup; the two gas ports lead into the sides of the chamber.

The chamber is enclosed with a dome with three windows, two for the spectrometer radiation to enter and exit the chamber and the third for viewing, illuminating, or irradiating the sample. This enables the use of the reaction chambers for photochemical studies. The standard material for the three windows is UV quartz.

CAUTION:
Parts for the high pressure and low pressure domes should not be exchanged. The high pressure domes undergo high pressure testing and are guaranteed to work under the rated pressure.

GETTING READY

Before installing the High Temperature Reaction Chamber (HVC) familiarize yourself with it by referring to the drawing of the HVC found below (Figure 10).

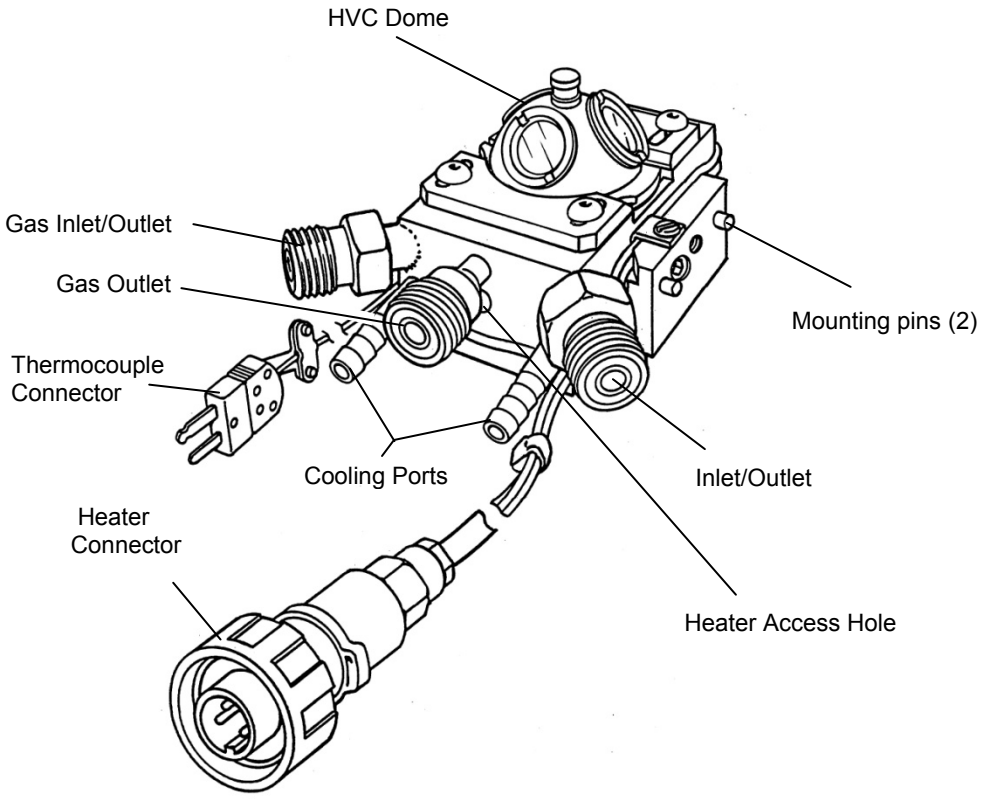

Figure 10 • The High Temperature Reaction Chamber HVC

WINDOW INSTALLATION

If the windows are not already installed or need to be cleaned or changed follow the steps below (Figure 11).

NOTE: *The observation window is the window that is located between the two semicircular indentations on the rim of the dome.*

- Insert an o-ring in one of the window ports.
- Hold the retaining ring upside-down and place a PTFE washer inside.
- Then carefully place a window on top of the PTFE washer.
- Hold the retaining ring so that it continues to retain the window and thread it into the window port.
- Tighten to secure the window in place using the tool provided for tightening and loosening the retaining rings.
- Repeat these steps until all three windows are installed.

NOTE: *Be careful not to touch the windows during installation.*

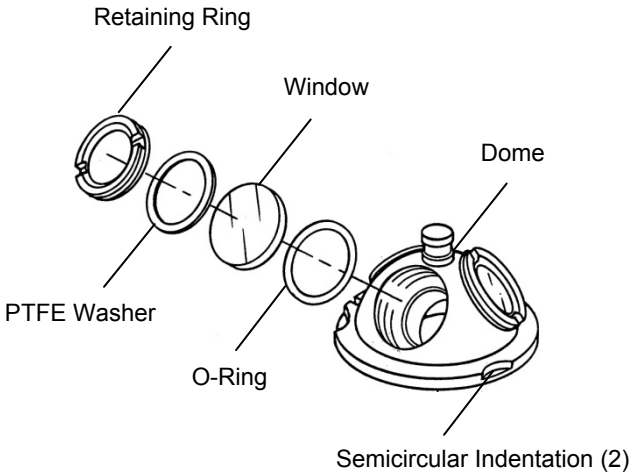

Figure 11 • Installing the HVC Dome Windows

DOME INSTALLATION

Although it is not necessary to install the dome until later, it is recommended to become familiar with the procedure before proceeding to the next step.

- Prior to installation of the dome make sure that the o-ring and groove on the bottom of the dome are clean and free of dust.
- Retract the retaining plates on the HVC as far as possible.
- Install the dome making sure that the orientation slot on the dome engages the orientation pin on the HVC (Figure 12).
- Slide the retaining plates all the way over the rim of the dome.
- Tighten the retaining plate screws to secure the dome.

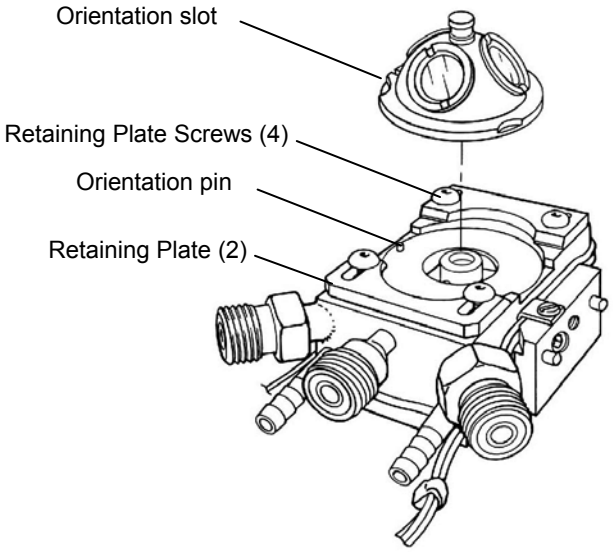

Figure 12 • Installing the HVC Dome

INSTALLING THE HVC

Before installing the HVC in the Praying Mantis™, make sure that the Praying Mantis™ is aligned in the spectrometer.

- Unscrew the thumbscrew on the top plate of the Praying Mantis™ (Figure 1).
- Carefully swing the top plate of the Praying Mantis™ out of the way.
- Grasp the sample stage (Figure 13) and unscrew its mounting screw.
- Slide the sample stage slightly to the left to dislocate its mounting pins.
- Remove the sample stage.
- Locate the mounting pins on the side of the HVC (Figure 9) in the pin holes where the sample stage was located.
- Reinstall and tighten the sample stage mounting screw.

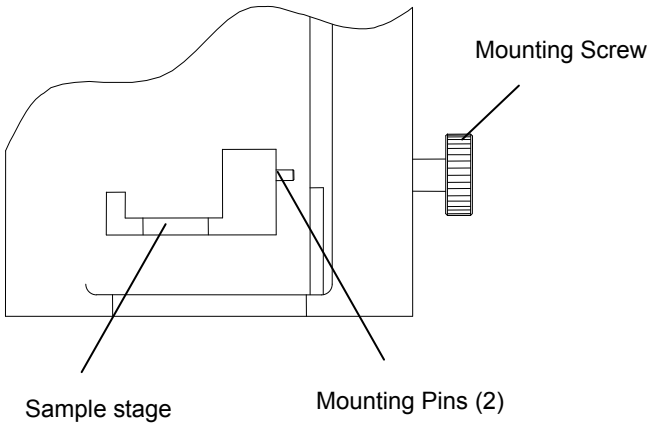

Figure 13 • Installing the HVC

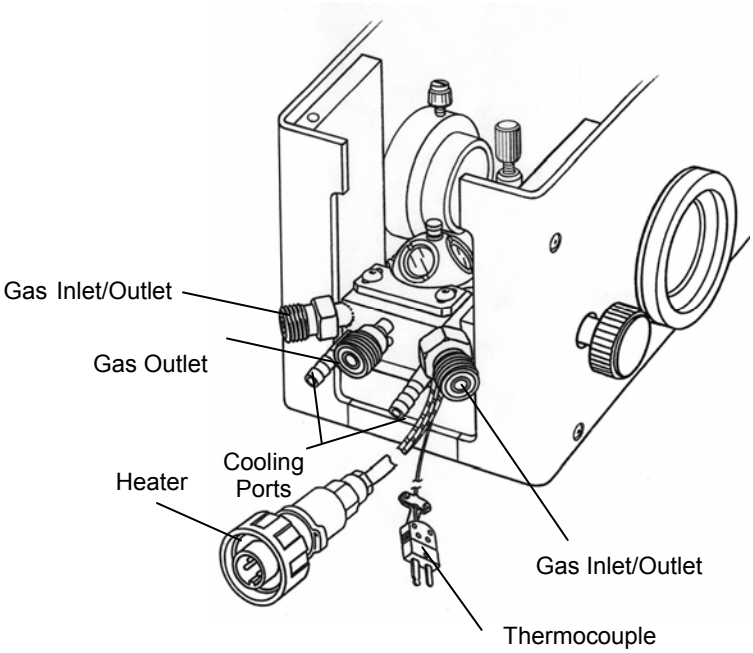

Figure 14 • The HVC Installed

FLUID / ELECTRICAL CONNECTIONS

- If temperature control is desired, connect the thermocouple and the heater (Figure 6) to a suitable temperature controller.
- If the HVC is to be operated at temperatures above 100°C, use 1/4" tubing to connect the two cooling ports (see Figure 6) to a water inlet/outlet or a coolant circulator. If needed, use a hose clamp to secure the tubing to the barbed fitting.

NOTE: *Flowing water or coolant through the cooling conduit improves the thermal isolation between the sample cup and the outer chamber, preventing damage to the o-rings and windows and minimizing unwanted spectral artifacts, including extraneous noise. While water from a faucet can be used, an enclosed circulator or economic chiller will provide greater thermal stability.*

- If vacuum is desired, connect the gas outlet (1/4" VCO fitting, see Figure 6) to a vacuum pump or other source of vacuum using 3/8" I.D. vacuum tubing. Seal off the two gas inlet/outlet ports.
- If reaction or process gas/es are to be passed through the sample, connect the gas inlet/out ports (1/4" VCO fitting, see Figure 6) as needed to the gas source/s. Connect the gas outlet and seal off any unused gas ports.
- If reaction or process gas/es are to be passed over the sample, seal off the gas outlet. Connect one of the gas inlet/outlet ports to the gas source and the other as the outlet.

NOTE: *Operation above 800ºC increases the thermal stress on the o-rings and windows. Be sure to check their condition regularly during high temperature operation.*

Continued operation at or near the high temperature limit of the cell will reduce the lifetime of the heater.

CAUTION:
Do not overtighten the VCO fittings. These are o-ring sealed fittings and they only need to be finger-tight to seal. If this is not sufficient, inspect the o-ring and replace as needed.

COLLECTING THE BASELINE SPECTRUM

Before putting the sample or background material into the sample cup, the screen must be installed. Select a screen with a smaller pore size than sample particle size (see Table 1 below).

Table 1: Screen Pore Sizes

Pore Size (mm)	Pore Size (inches)	116-439 Label	Part Number
0.104	0.0041	1	116-439-1S
0.061	0.0024	2	116-439-2S
0.038	0.0015	3	116-439-3S

- Place a sample screen into the sample cup and locate the plastic overflow tray over the sample cup (Figure 15).

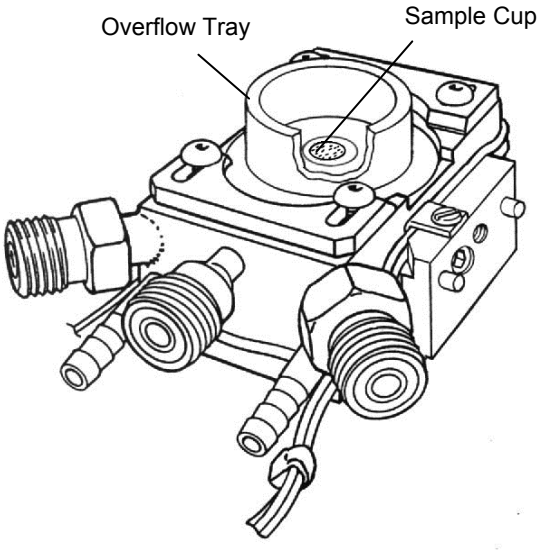

Figure 15 • Filling the Cup

NOTE: *For best results, the reference material, a non-absorbing powder or rough surfaced solid, should be ground as finely as possible and packed tightly into the sample cup.*

- Fill the sample cup with the reference material using the provided packing tool. Draw the straightedge across the top of the cup to level off the surface.
- Carefully remove the overflow tray.
- Install the dome on the HVC (see page 15).
- Swing the Praying Mantis™ cover back into place and tighten the thumbscrew.
- Set the temperature and pressure to desired operating conditions.
- In VISION*pro*, under the Command Menu, choose Optical Alignment.
- Adjust the height adjustment thumbscrew (Figure 1) to maximize the signal on the detector.
- Collect the baseline spectrum.

SAMPLE SPECTRUM

- Restore the reference material to ambient conditions.
- Remove the dome.
- Empty the sample cup. This can be done by vacuuming out the reference sample or by removing the HVC from the Praying Mantis™ and dumping out the material.
- If needed, clean the sample cup.
- Fill the sample cup with the sample (follow procedure in the alignment section).
- Install the dome.
- Install the HVC into the Praying Mantis™ if it was removed to empty the sample cup.
- Swing the top plate back into place and tighten the thumbscrew (Figure 1).
- Restore the desired sampling conditions.
- Collect the sample spectrum.
- Empty the sample cup and clean it before running the next sample.

NOTE: *For best results, use powdered samples in low concentration, diluting as needed with a non-absorbing powder such as that used for the reference.*

ABOUT THE COOLING CARTRIDGE

This optional cooling cartridge is designed to slide into the HVC instead of the supplied heater for moderate heating or cooling of the sample. It readily connects to chillers or recirculators using ¼" ID tubing.

INSTALLATION

REMOVING THE HEATER

- Remove the HVC from the Praying Mantis™ if it is installed.
- Use a 3/32 ball driver to unfasten the screw in the mounting block on the side of the HVC and remove the mounting block.
- Use a flat blade screwdriver to remove the screw and clamp on the back of the HVC that anchors the heater and thermocouple wire to the HVC.
- Push a small, blunt object through the heater access hole at the front of the HVC.
- Slide the heater out the back of the unit.
- Locate the mounting block on its pins with the thermocouple wire passing through the slot.
- Use a 3/32" hex-head driver to screw the mounting block back onto the side of the HVC.
- Use the new thermocouple (TC) clamp provided to re-secure the thermocouple wire.

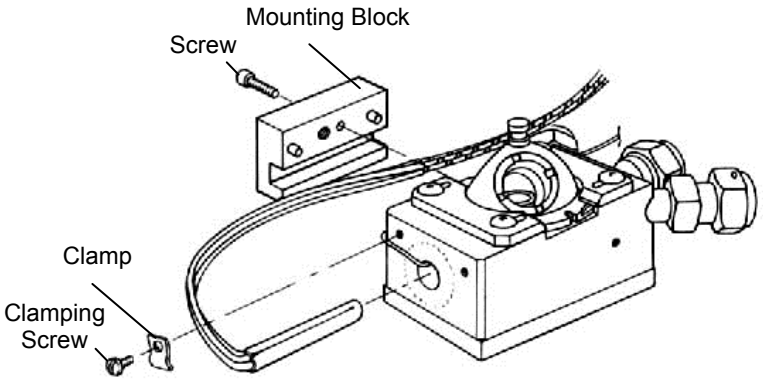

Figure 16 • Removing the Heating Cartridge

INSTALLING THE COOLING CARTRIDGE

- Slide it into the HVC until it hits the stop.
- Use a 1/16" hex-head driver to clamp the cooling cartridge in place as shown using, the clamp and screw provided.

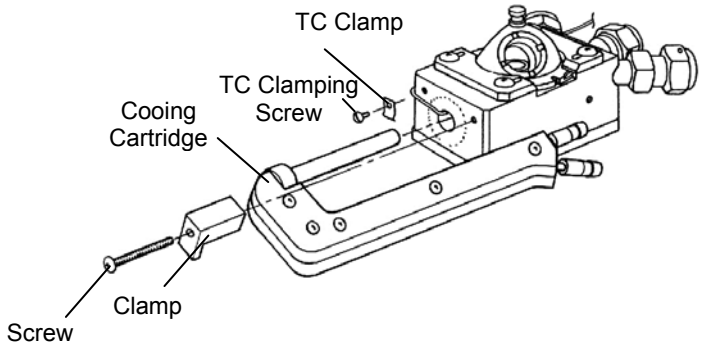

Figure 17 • Installing the Cooling Cartridge

- Install the HVC in the Praying Mantis™ and install it into the spectrometer.
- Connect ¼" ID tubing from the barbed fittings to the chiller or recirculator. If needed, use a hose clamp to secure the tubing to the barbed fitting.

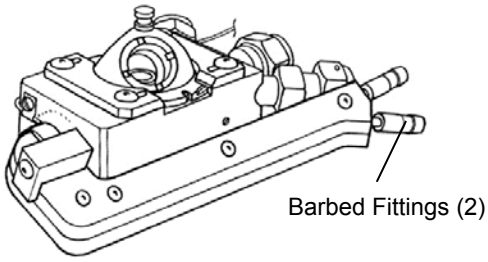

Figure 18 • Cooling Cartridge Installed

NOTE: *There is a temperature differential between the set temperature of the chiller or recirculator and the sample cup due to thermal losses through the tubes, etc. Use the HVC thermocouple to monitor this differential and fine-tune the set temperature as needed.*

ABOUT THE PURGE SHIELD

This optional purge shield slips into the Praying Mantis to improve the purge sealing around the front of the HVC.

INSTALLATION

- Unscrew the thumbscrew on the top plate of the Praying Mantis™.
- Carefully swing the top plate of the Praying Mantis™ out of the way.
- If the sampling stage or HVC is installed in the Praying Mantis™, unscrew the mounting screw and remove the sampling stage.
- Slide the purge shield into the Praying Mantis, directly behind the front of the accessory, as shown in Figure 19.
- Push the purge shield slider up to allow room for installation of the HVC.

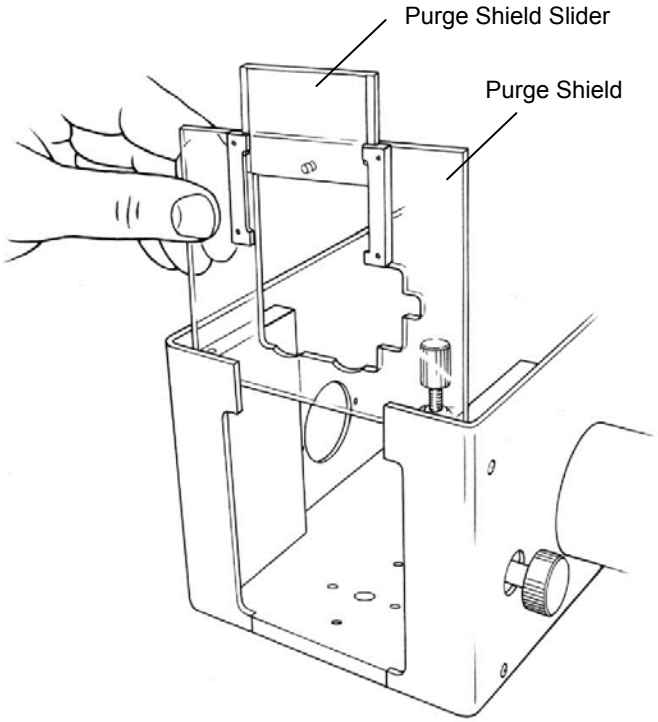

Figure 19 • Removing the Heating Cartridge

NOTE: *The purge shield is transparent, allowing easy viewing of the sample. It is not, however, intended for use in conjunction with sample illumination through the observation window.*

- Feed the HVC through the purge shield.
- Locate the mounting pins on the side of the HVC in the pin holes where the sample stage was located.
- Reinstall and tighten the sample stage mounting screw.
- Push the purge shield slider down to seal the front of the HVC.
- Continue setting up the HVC as described previously.

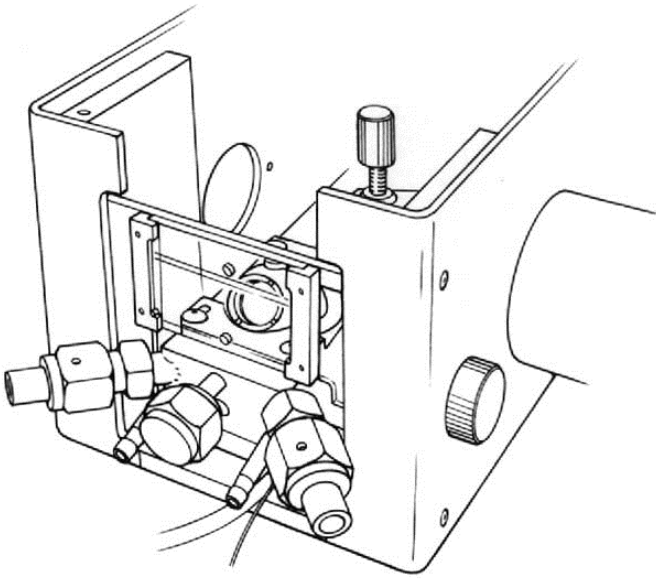

Figure 20 • Removing the Heating Cartridge

ABOUT THE LOW TEMPERATURE REACTION CHAMBER (CHC)

The CHC is designed for operation from -150°C up to 600°C under vacuum. The pressure range is from high vacuum (133 μPa or 10^{-6} torr) to pressures up to 304kPa or 2.3 ktorr (for pressures above 133 kPa or 1 ktorr use either the high pressure dome or use SiO_2 or ZnSe windows). At higher pressures, the maximum operating temperature may be lower.

The CHC is made of chemically resistant 316 stainless steel. Within the chamber is a temperature-controlled sample stage with an integral sample cup. This stage incorporates a cartridge heater and two thermocouples, one in the sampling stage and one in the sample cup. The sample stage is thermally isolated from the outer chamber wall. A water-cooling jacket controls the temperature of the outer surface of the chamber and windows during high or low temperature operation. The chamber has three gas ports for evacuating, pressurizing or flowing gas through the sample. These ports are equipped with 1/4" VCO fittings. One of the ports leads directly under the sample cup, the other two lead into the chamber.

The chamber is enclosed with a dome with three windows, two for the spectrometer radiation to enter and exit the chamber and the third for viewing, illuminating, or irradiating the sample. This enables the use of the reaction chambers for photochemical studies. The standard material for three observation windows is UV quartz.

CAUTION:
Parts for the high pressure and low pressure domes should not be exchanged. The high pressure domes undergo high pressure testing and are guaranteed to work under the rated pressure.

GETTING READY

Before installing the Low Temperature Reaction Chamber (CHC) familiarize yourself with it by referring to the drawing of the CHC found below (Figure 21).

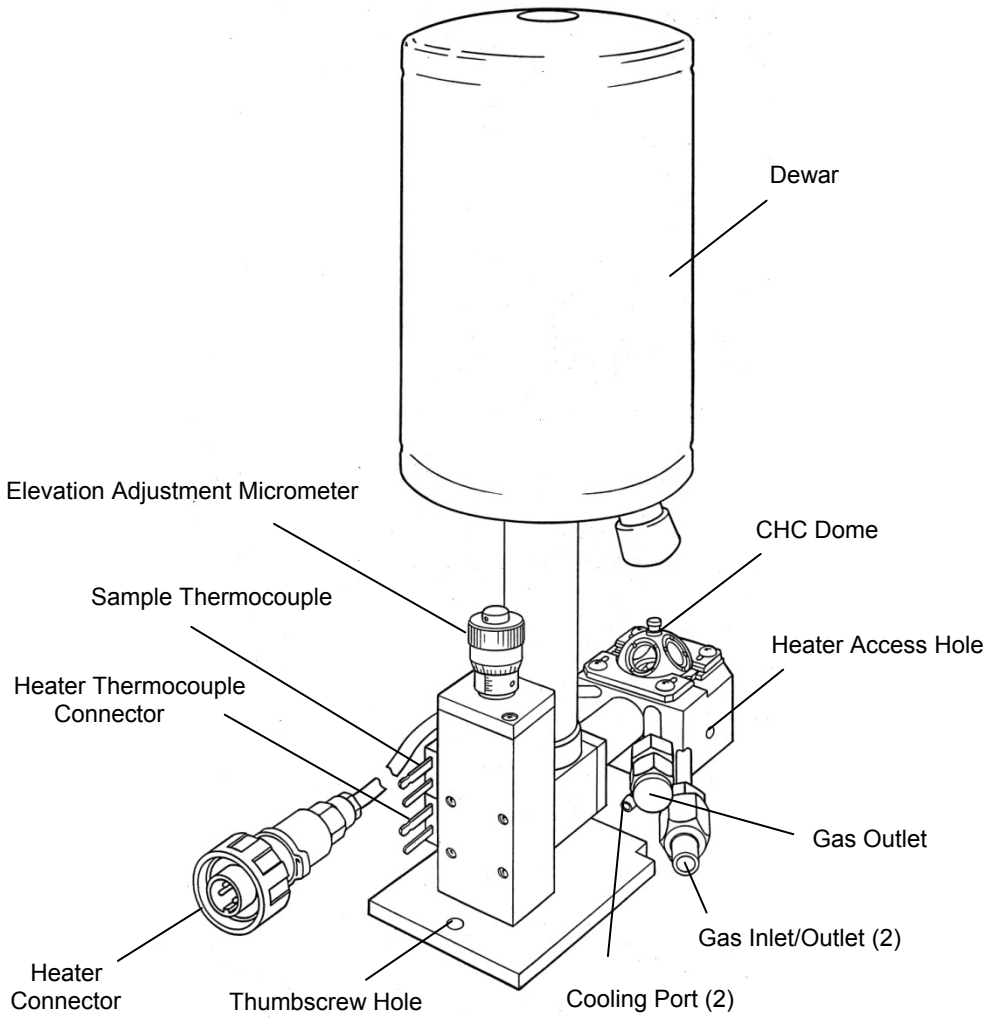

Figure 21 • The Low Temperature Reaction Chamber CHC

WINDOW INSTALLATION

If the windows are not already installed or need to be cleaned or changed follow the steps below (Figure 22).

NOTE: *The observation window is the window that is located between the two semicircular indentations on the rim of the dome.*

- Insert an o-ring in one of the window ports.
- Hold the retaining ring upside-down and place a PTFE washer inside.
- Then carefully place a window on top of the PTFE washer.
- Hold the retaining ring so that it continues to retain the window and thread it into the window port.
- Tighten to secure the window in place using the tool provided for tightening and loosening the retaining rings.
- Repeat these steps until all three windows are installed.

NOTE: *Be careful not to touch the windows during installation.*

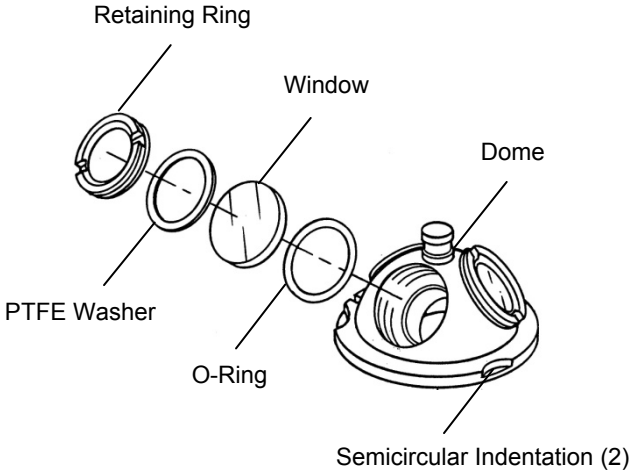

Figure 22 • Installing the CHC Dome Windows

DOME INSTALLATION

Although it is not necessary to install the dome until later, it is recommended to become familiar with the procedure before proceeding to the next step.

- Prior to installation of the dome make sure that the o-ring and groove on the bottom of the dome are clean and free of dust.
- Retract the retaining plates on the CHC as far as possible.
- Install the dome making sure that the orientation slot on the dome engages the orientation pin on the CHC (Figure 23).
- Slide the retaining plates all the way over the rim of the dome.
- Tighten the retaining plate screws to secure the dome.

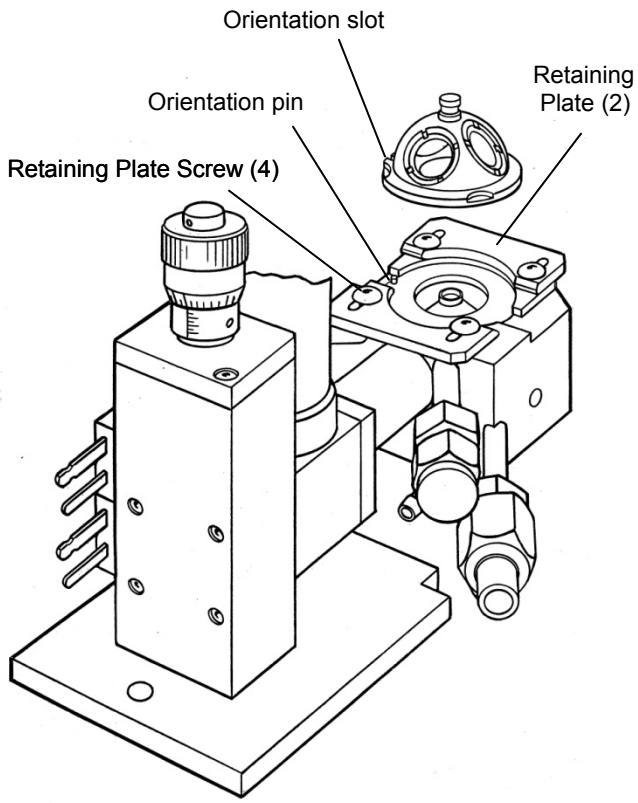

Figure 23 • Installing the CHC Dome

INSTALLING THE CHC

Before installing the CHC in the Praying Mantis™, align the Praying Mantis™ in the spectrometer. Then proceed to install the CHC.

- Unscrew the thumbscrew on the top plate of the Praying Mantis™.
- Carefully swing the top plate of the Praying Mantis™ out of the way.
- Grasp the sample stage and unscrew its mounting screw.
- Slide the sample stage slightly to the left to disengage its mounting pins.
- Remove the sample stage.
- Lift the accessory out of the sample compartment and rest it on its back.
- Thread the foot assembly onto the mounting plate (see Figure 24).
- Tighten the knob against the mounting plate.

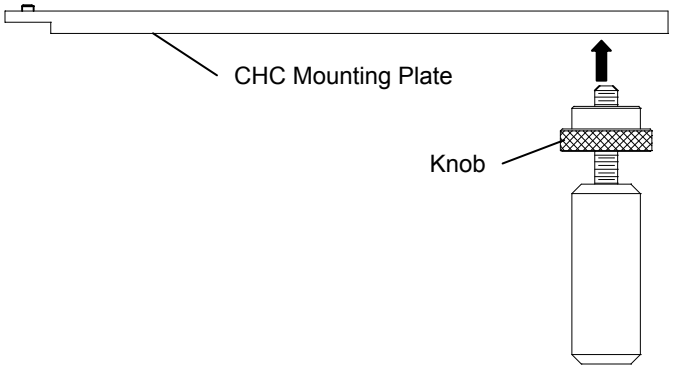

Figure 24 • Installing Foot Assembly

- Rotate the foot counter-clockwise to move the foot closer to the knob. Note that the foot will be adjusted after installation on the Praying Mantis™.

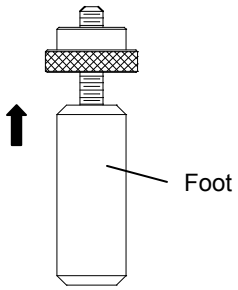

Figure 25 • Initial Foot Adjustment

- Unscrew the four screws using a 7/64 hex wrench and remove the base plate from the Praying Mantis™.

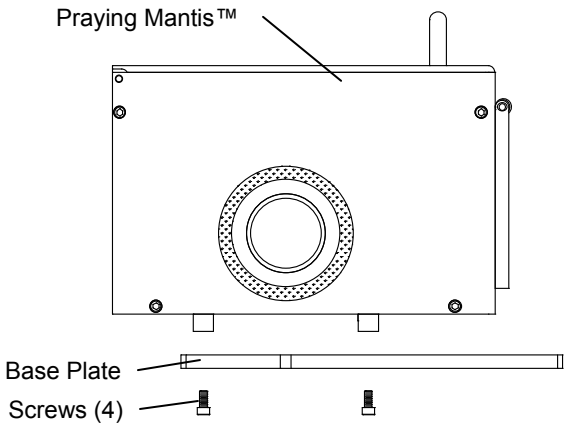

Figure 26 • Removing the Base Plate

- Locate the CHC mounting plate pin in the hole in the bottom of the Praying Mantis™ (see Figure 27).
- Use the two pan head screws provided to secure the mounting plate in place.

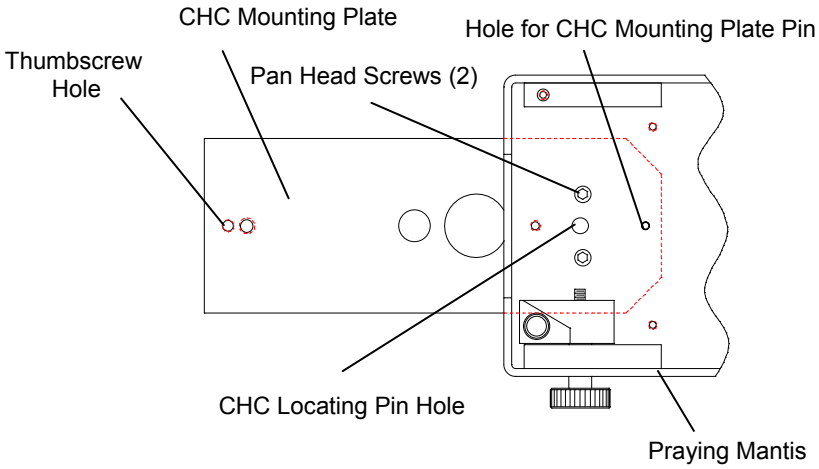

Figure 27 • Installing the CHC Mounting Plate (Top View)

- Orient the CHC Mounting Plate as shown in Figure 28.
- Thread all four screws to secure the mounting plate in place.
- Then tighten the four screws.

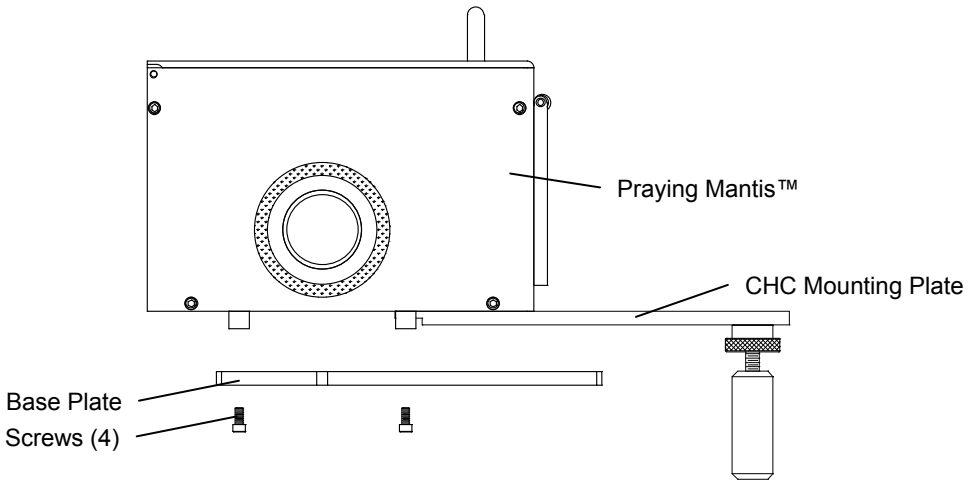

Figure 28 • Reinstalling the Base Plate

- Install the Praying Mantis™ into the sample compartment of the spectrometer.
- Unscrew the foot to lower it onto the bench top.

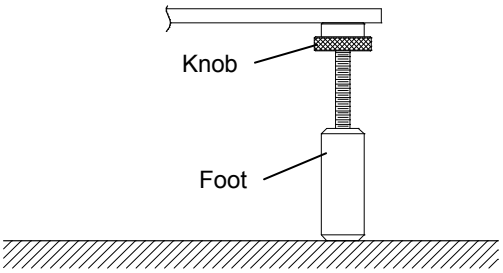

Figure 29 • Adjusting the Foot

CAUTION:
The foot must rest on a bench top or other surface. If it does not, the Praying Mantis™ will not be adequately secured when the CHC is installed.

- Mount the CHC by guiding the locating pin which is directly under the CHC body into the locating hole in the DRP base.
- Fasten the thumbscrew (Figure 30) to secure the CHC to the CHC mounting plate.

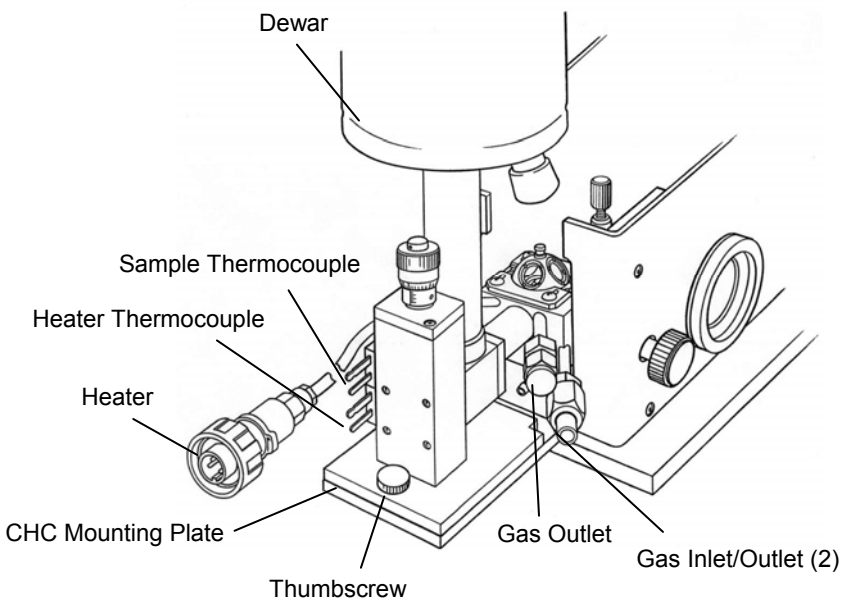

Figure 30 • The CHC installed

INSTALLING THE SCREEN

Before putting the sample or background material into the sample cup, the screen must be installed. Select a screen with a smaller pore size than sample particle size (see Table 1 below).

Table 1: Screen Pore Sizes

Pore Size (mm)	Pore Size (inches)	116-439 Label	Part Number
0.104	0.0041	1	116-439-1S
0.061	0.0024	2	116-439-2S
0.038	0.0015	3	116-439-3S

To install:

- Loosen the sample thermocouple fitting (see Figure 31).
- Pull gently on the thermocouple wire to retract the thermocouple (see Figure 32).
-

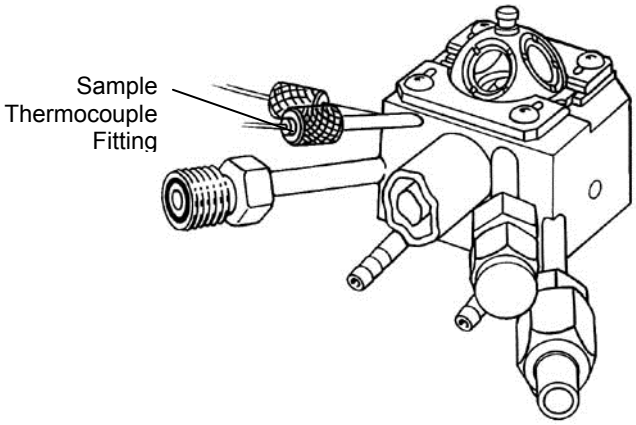

Figure 31 • Sample Thermocouple Fitting

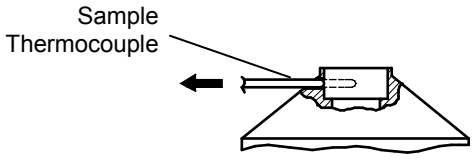

Figure 32 • Retracting the Thermocouple

- Place a sample screen into the sample cup (see Figure 33).
- Slide the thermocouple back in, until the end of the thermocouple is roughly in the center of the cup (see Figure 34).
- Retighten the thermocouple fitting.

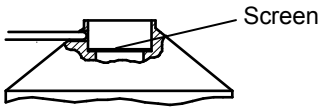

Figure 33 • Screen Installation

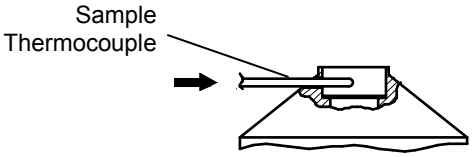

Figure 34 • Repositioning the Thermocouple

NOTE: *The screen must be installed correctly for proper sample thermocouple read-out.*

FLUID / ELECTRICAL CONNECTIONS

- If temperature control is desired, connect the thermocouple and the heater (Figure 29) to a suitable temperature controller.
- If the CHC is to be operated at temperatures above 100°C or below 0°C, use 1/4" tubing to connect the two cooling ports (see Figure 34) to a water inlet/outlet or a coolant circulator. If needed, use a hose clamp to secure the tubing to the barbed fitting.

NOTE: *Flowing water or coolant through the cooling conduit improves the thermal isolation between the sample cup and the outer chamber, preventing damage to the o-rings and windows and minimizing unwanted spectral artifacts, including extraneous noise. While water from a faucet can be used, an enclosed circulator or economic chiller will provide greater thermal stability.*

- If vacuum is desired, connect the gas outlet (1/4" VCO fitting, see Figure 34) to a vacuum pump or other source of vacuum using 3/8" I.D. vacuum tubing. Seal off the two gas inlet/outlet ports.
- If reaction or process gas/es are to be passed through the sample, connect the gas inlet/out ports (1/4" VCO fitting, see Figure 34) as needed to the gas source/s. Connect the gas outlet and seal off any unused gas ports.
- If reaction or process gas/es are to be passed over the sample, seal off the gas outlet. Connect one of the gas inlet/outlet ports to the gas source and the other as the outlet.
- Leak test the CHC to confirm that it is properly sealed.

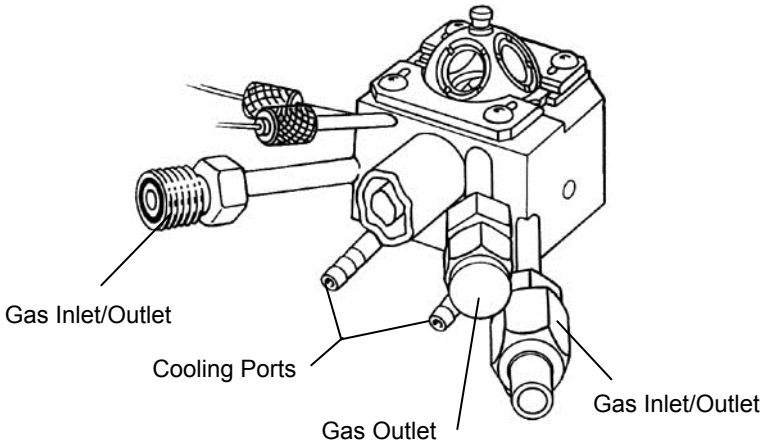

Figure 35 • The CHC Fittings

CAUTION:
Do not overtighten the VCO fittings. These are o-ring sealed fittings and they only need to be finger-tight to seal. If this is not sufficient, inspect the o-ring and replace as needed.

COLLECTING THE BASELINE SPECTRUM

- Place a sample screen into the sample cup and locate the plastic overflow tray over the sample cup (Figure 36).
- Fill the sample cup with the reference material using the provided packing tool. Draw the straightedge across the top of the cup to level off the surface.
- Carefully remove the overflow tray.
- Install the dome.
- Swing the Praying Mantis™ cover back into place and tighten the thumbscrew (Figure 1).

NOTE: *For best results, the reference material, a non-absorbing powder or rough surfaced solid, should be ground as finely as possible and packed tightly into the sample cup.*

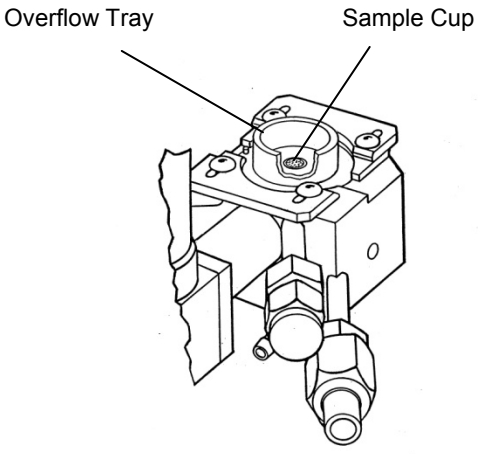

Figure 36 • Filling the Cup

- Fill the Dewar with liquid nitrogen or other coolant.
- Set the temperature and pressure to desired operating conditions.

NOTE: *Be sure to fill the Dewar slowly, otherwise an air bubble will form in the cold finger under the sample stage, preventing efficient cooling.*

CAUTION:
Do not cool the chamber with liquid nitrogen when it is open to the air, as this can condense oxygen and create a hazardous condition.

- In VISION*pro*, under the Command Menue, choose Optical Alignment.
- Adjust the elevation adjustment micrometer on the CHC (Figure 19) to maximize the signal on the detector.
- Collect the baseline spectrum.

CAUTION:
To prevent frost from forming on the interior of the CHC, do not open the cell to the air until the heater thermocouple temperature is above freezing (0°C).

SAMPLE SPECTRUM

- Restore the reference material to ambient conditions.
- Remove the dome.
- Empty the sample cup. This can be done by vacuuming out the reference sample or by removing the CHC from the Praying Mantis™ and dumping out the material.
- If needed clean the sample cup.
- Fill the sample cup with the sample (follow procedure in the alignment section).
- Install the dome (see page 26).
- Install the CHC into the Praying Mantis™ if it was removed to empty the sample cup.
- Swing the top plate back into place and tighten the thumbscrew (Figure 1).
- Restore the desired sampling conditions.
- Collect the sample spectrum.
- Empty the sample cup and clean it before running the next sample.

NOTE: *If the sample is a strong absorber it may need to be diluted (approximately 5%) in a nonabsorbent matrix (like KBr or powdered PTFE).*

TROUBLESHOOTING

Frosting

If frost appears on the linkage between the CHC reaction chamber and its dewar, check the CHC for leaks and replace the o-rings as needed.

Failure to Pump Down

If the CHC fails to pump down to low pressure, check the unit for leaks and replace the o-rings as needed. If this does not resolve the problem, remove the bottom cover of the CHC and confirm that the interior is dry. If the interior is wet, contact Harrick Scientific for further assistance.

CAUTION:
Do not over tighten the VCO fittings. These are o-ring sealed fittings and they only need to be finger-tight to seal. If this is not sufficient, inspect the o-ring and replace as needed.

Failure to cool

If the CHC fails to cool to -150ºC with liquid nitrogen in the Dewar when the chamber is evacuated, check the unit for leaks and replace the o-rings as needed. If this fails to resolve the problem and the CHC is leak-free, it is likely that the Dewar is no longer sufficiently evacuated to provide the insulation required for low temperature operation. See the maintenance section for details on evacuating the dewar.

LEAK CHECKING

The Reaction Chambers have been carefully checked for leaks before shipment. However, each time the Reaction Chambers are disassembled and reassembled, leaks may develop due to improper setting of the o-rings. If leaks occur, carefully inspect all o-rings and sealing surfaces for damage and contamination. Small leaks can be pinpointed using a Helium Leak Detector. Contact Harrick Scientific Products, Inc. for advice and/or repair information.

CLEANING THE REACTION CHAMBERS

To thoroughly clean the reaction chambers follow the procedure below.

To clean the HVC:

- Vacuum out the sample or remove the HVC from the Praying Mantis™, remove the dome, turn the HVC upside-down and dump out the sample.
- Use solvent to clean off the remaining sample.
- Unscrew the eight screws that secure the bottom cover of the HVC.
- Remove the bottom cover to reveal three access holes.
- Carefully wipe or blow clean air through these holes to clean the interior of the HVC.
- When the interior is clean, make sure the o-rings on the bottom plate are clean and free of dirt.
- Re-install the bottom cover.

To clean the CHC:

- Vacuum out the sample or remove the CHC from the Praying Mantis™, remove the dome, turn the CHC upside-down and dump out the sample.
- Use solvent to clean off the remaining sample.
- Unscrew the four screws that secure the bottom cover of the CHC.
- Remove the bottom cover to reveal the access hole.
- Gingerly wipe or blow clean air through the hole to clean the interior of the CHC.
- When the interior is clean, make sure the o-ring on the bottom plate is clean and free of dirt.
- Re-install the bottom cover.

REPLACING THE HEATER

To replace the HVC heater:

- Remove the HVC from the Praying Mantis™ if it is installed.
- Use a 3/32 ball driver to unscrew the screw in the mounting block on the side of the HVC and remove the mounting block.
- Use a slotted screwdriver to remove the screw and clamp on the back of the HVC that anchors the heater and thermocouple wire to the HVC.
- Grasp the heater wires firmly and slide the heater out.
- If replacing the thermocouple, slide the old thermocouple out of the HVC. Then insert the new thermocouple into the small hole (see Figure 13) as far as it will go.
- Slide the heater into the HVC until it hits the stop. Make sure that the heater and thermocouple are inserted completely into the body..
- Position the mounting block onto the side of the HVC, feeding the three wires along the recess in the block.
- Then use a 3/32 ball driver to secure the mounting block in place.
- Reinstall the clamp to secure the wires to the back of the HVC.

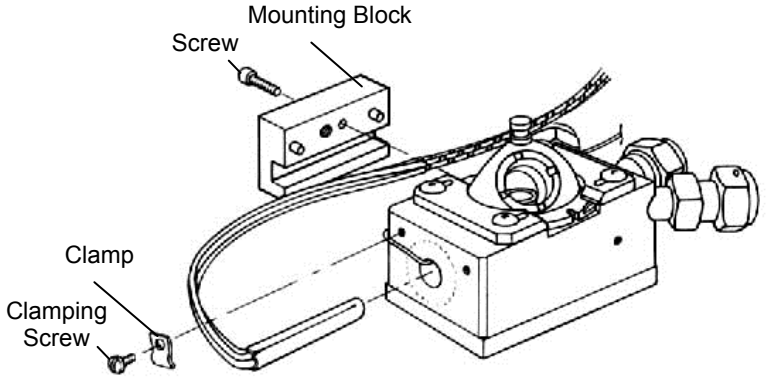

Figure 37 • Removing the Heating Cartridge

To replace the CHC heater:

- Remove the CHC from the Praying Mantis™.
- Push a small, blunt object through the heater access hole (Figure 15) at the opposite side of the heating wires.
- Slide the heater out the other side of the unit.
- Slide it into the CHC until it hits the stop.
- Make sure that the heater is inserted completely into the body before re-securing the wire.

REPLACING THE O-RINGS

The o-rings used by the Reaction Chambers should be replaced periodically. The Reaction Chambers have o-rings for sealing the windows, o-rings for sealing the access holes, o-rings on the fittings, and an o-ring to seal the dome to the Reaction Chamber.

> ***CAUTION:***
> *Do not over tighten the VCO fittings. These are o-ring sealed fittings and they only need to be finger-tight to seal. If this is not sufficient, inspect the o-ring and replace as needed.*

REPLACING THE THERMOCOUPLE

To replace the HVC thermocouple:

- Remove the HVC from the Praying Mantis™.
- Loosen the screw on the side of the HVC that anchors the thermocouple wire to the HVC.
- Remove the two screws at the back of the HVC that clamp down the heater and thermocouple wires.
- Gently pull out the heater and then the thermocouple.
- Slide the new thermocouple into the small hole in the HVC (see Figure 38) until it hits the stop. Make sure that the heater and thermocouple are inserted completely into the body before re-securing the wires.

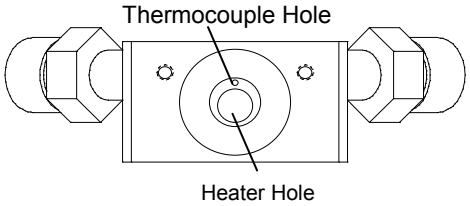

Figure 38 • Installing the HVC Thermocouple.

To replace the CHC thermocouples:

- Remove the CHC from the Praying Mantis™.
- Unscrew the appropriate thermocouple fitting.
- Gently pull out the thermocouple.
- Inspect the portion of the fitting still connected to the thermocouple wire to establish the correct orientation of the ferrule.
- Slide the parts off the thermocouple wire and reinstall them in the same manner on the new thermocouple wire.
- Slide the new thermocouple into the CHC. The heater thermocouple should slide in until it hits the stop. The sample thermocouple should slide in until the end of the thermocouple is centered in the cup.
- Tighten the thermocouple fitting.

EVACUATING THE DEWAR

Under some circumstance, the Dewar may become insufficiently evacuated to provide the insulation required for low temperature operation.

With the proper equipment, the Dewar can be re-evacuated on site. Please see the instructions below. Or contact Harrick Scientific Products, Inc.

NOTE: *Re-evacuation of the chamber and replacement of the o-ring may be required every 1-2 years.*

The following equipment is required to re-evacuate the Dewar:

- A vacuum system capable of pumping the Dewar down to at least 133mPa (1 mtorr) ultimate pressure and an appropriate gauge for monitoring the vacuum.
- Retaining ring pliers (included in P/N CHC-POK).
- Pump-out operator (included in P/N CHC-POK).
- Replacement o-ring (P/N ORV-011; included in P/N CHC-POK).

To re-evacuate the Dewar:

- Remove the CHC from the Praying Mantis and situate it near the vacuum system.
- Clamp the CHC base to a benchtop upright.
- Pull the black plastic cover off the pump-out port of the Dewar.
- Remove the retaining ring from the port if there is one present (see Figure 39) using retaining ring pliers.
- Push the pump out operator over the port and then push the stem down until it touches the plug.
- Turn the stem clockwise to engage the threads all the way.
- Pull on the operator to remove the plug.
- Clean the inside of the port.
- Replace the o-ring and clean the plug.
- Put a small dab of vacuum grease on the o-ring.
- Reinstall the operator and the plug onto the port.

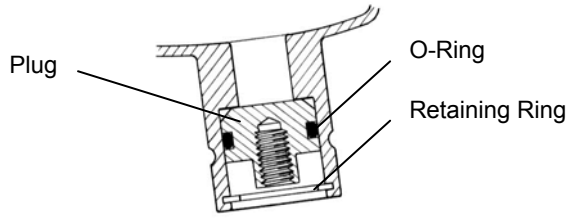

Figure 39 • CHC Dewar Pump Out Port

- Reinstall the plug, making sure that the operator is still fully engaging the threads on the plug.
- Tighten the hex nut on the operator to seal the operator to the port.
- Attach a vacuum hose (5/8” OD) from the vacuum system to the side branch of the operator.
- Pump the vacuum hose down first.
- Then pump down the pump-out operator by holding the operator body with one hand while pulling up on the stem with the other.
- Pump on the vacuum jacket for at least 4 hours. Heating either the inner wall or vacuum jacket will enhance the quality of the vacuum obtained. The heating method must be carefully controlled so that none of the surfaces exceed 120°C. The vacuum should reach a stable value of less than 2.7 Pa (20 mtorr). If it does not, check for leaks and repair. Allow the Dewar to remain on the vacuum system for a number of hours after the minimum vacuum level has been reached.
- After evacuation is complete, reseal the pump-out by pushing the stem all the way down.
- Disengage the stem by turning counterclockwise until free.
- Close the isolation valve on the vacuum pumping system or turn the pump off.
- Loosen the hex nut and pull the operator off the pump-out.
- Replace the retaining ring and plastic cap.

SPECTRALON THROUGHPUT

To verify the performance of the Spectralon reference disk, collect the equivalent of a throughput spectrum with the Spectralon disk as the sample in place of the titled alignment mirror.

- Make sure all sample holders and accessories are removed from the sample compartment.
- Set the spectrometer to %T mode.
- Collect a 100%T baseline with no accessory in the sample compartment. This baseline spectrum will be used to verify the throughput of the Praying Mantis™.
- Install and align the Praying Mantis™.
- Place the Spectralon disk in the standard sampling cup.
- Open the door of the Praying Mantis™.
- Slide the samping cup in as far as it will go.
- Close the door.
- In VISION*pro*, under the Command Menu, choose Optical Alignment.
- Make small adjustments to the height of the sample using the appropriate thumbscrew to maximize the signal on the detector.
- Place the supplied window cover over the window in the top of the Praying Mantis™ or close the spectrometer cover.
- Collect the sample spectrum for the throughput measurement.

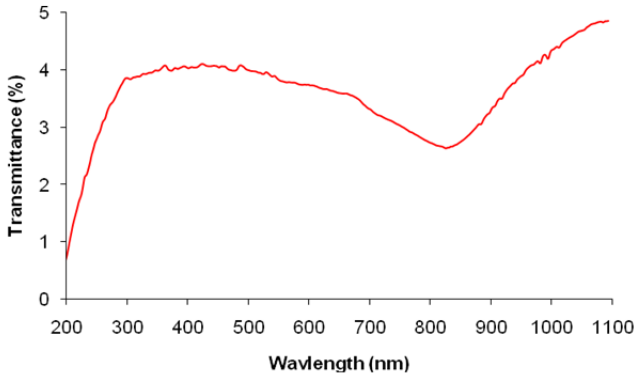

Figure 40 • Praying Mantis™ Throughput Recorded with the Spectralon Disk

- Read the maximum value at 400nm.
- The Praying Mantis™ throughput at that wavelength should be at least 3% and the spectrum should resemble the Praying Mantis™ throughput spectrum shown in Figure 33.

OPTIONAL AND REPLACEMENT PARTS

OPTIONAL PARTS (Praying Mantis™)

Ambient Sample Chamber	DRP-ASC
High Temperature Reaction Chamber, 24V	HVC-VUV-5
Low Temperature Reaction Chamber, 24V	CHC-NI9-3
Spectroscopic Grade KBR Powder	KBR-100

OPTIONAL PARTS (Reaction Chambers)

Temperature Controller, 110V, with RS-485 to USB Adapter	ATK-024-3
Temperature Controller, 220V, with RS-485 to USB Adapter	ATK-024-4
RS-485 to USB Adapter for the Temperature Controller	ATC-USB-485
Vacuum Pump, 110V	VPE-001
Vacuum Pump, 220V	VPE-002
UV Quartz Window for the Vacuum/Low Pressure Domes	WAD-U23
Si Window for the Vacuum/Low Pressure Domes	WED-U23
CaF2 Window for the Vacuum/Low Pressure Domes	WFD-U23
ZnS Window for the Vacuum/Low Pressure Domes	WID-U23
ZnSe Window for the Vacuum/Low Pressure Domes	WMD-U23
KBr Window for the Vacuum/Low Pressure Domes	WPD-U23
O-Ring (#23) for the Dome, Kalrez	ORK-023
O-Ring (#13) for Windows of the Dome, Kalrez	ORK-013
O-Ring (#10) for the VCO Fittings, Kalrez	ORK-010
Adapter, ¼" female VCO to ¼" Swagelok	007-085
Adapter, ¼" female VCO to 6 mm Swagelok	116-998

HVC Reaction Chambers Only

High Pressure Dome, ZnS Windows	HVC-DWI-3
High Pressure Dome, ZnSe Windows	HVC-DWM-3
High Pressure Dome, UV Quartz Windows	HVC-DWA-3
ZnS Window for the High Pressure Dome	WID-U43
ZnSe Window for the High Pressure Dome	WMD-U43
UV Quartz Window for the High Pressure Dome	WAD-U43
O-Ring (#16) for the Bottom Cover, Kalrez	ORK-016
Cooling Cartridge	HVC-COL
Purge Shield	DRP-PDR

CHC-CHA Reaction Chambers Only

O-Ring (#001) for Thermocouple Fitting, Kalrez	ORK-001
O-Ring (#26) for the Bottom Cover, Kalrez	ORK-026
O-Ring (#19) for the Dewar, Kalrez	ORK-019
Pump-Out Port Tool Kit (includes one ORV-011)	CHC-POK

REPLACEMENT PARTS (Praying Mantis™)

Alignment Fixture	DRP-ALN
Sampling Accessory Kit (includes alignment fixture and sampling cups)	DRP-SAP
Micro-sampling Cup	DRP-SX3
Sampling Cup	DRP-S10
Spectralon Disk	DRP-SPR
Magnet	017-003

REPLACEMENT PARTS (Reaction Chambers)

Packing Tool	116-836
K-Type Thermocouple	008-144
Flex Mounting Plugs – Male	008-266
UV Quartz Window for the Vacuum/Low Pressure Domes	WAD-U23
O-Ring (#23) for the Dome, Viton	ORV-023
O-Ring (#13) for Windows of the Dome, Viton	ORV-013
O-Ring (#10) for the VCO Fittings, Viton	ORV-010
PTFE Washer for the Windows	116-429
Screen Set, two each of three mesh sizes, 6.3 mm dia.	116-439
Screen Set, two each of three mesh sizes, 6.3 mm dia.	116-439
Screens (6), 150x150 mesh, pore size 0.104 mm (0.0041"), 6.3 mm dia.	116-439-1S
Screens (6), 250x250 mesh, pore size 0.061 mm (0.0024"), 6.3 mm dia.	116-439-2S
Screens (6), 400x400 mesh, pore size 0.038 mm (0.0015"), 6.3 mm dia.	116-439-3S

HVC Reaction Chambers Only

UV Quartz Window for High Pressure Dome	WAD-U43
1.00”x0.25” Cartridge Heater, 100W, 24V	HTRS-26
24V Heater Assembly	HVC-HT4
O-Ring (#16) for the Bottom Cover, Viton	ORV-016
Overflow tray, 11.0 mm ID	116-989

CHC-CHA Reaction Chambers Only

24V Heater Assembly	CHC-HTR
1.25”x0.25” Cartridge Heater, 100W, 24V	HTRS-16
O-Ring (#001) for Thermocouple Fitting, Viton	ORV-001
O-Ring (#26) for the Bottom Cover, Viton	ORV-026
O-Ring (#19) for the Dewar, Viton	ORV-019
Overflow tray	116-854
O-Ring (#11) for the Dewar Pump-Out Port	ORV-011

©2015 Harrick Scientific Products, Inc.