Thermo
SCIENTIFIC

Thermolyne Type RC2200 Remote Control Hot Plate

Operation Manual and Parts List

Model #	Size	Voltage
RC2230	12" x 12"	240V
RC2238	12" x 12"	208V
RC2235	12" x 12"	120V
RC2240	12" x 24"	240V

LT410X1 • 11/2/09

Table of Contents

IMPORTANT INFORMATION
This manual contains important operating and safety information. You must carefully read and understand the contents of this manual prior to the use of this equipment.

Safety Information

Your Thermo Scientific Thermolyne Remote Control Hot Plate has been designed with function, reliability, and safety in mind. It is your responsibility to install it in conformance with local electrical codes. For safe operation, please pay attention to the alert boxes throughout the manual.

Warning: These products should be used only under the operating conditions specified in the Operating Manual. Always use safe laboratory practices and do not leave the hotplate in operation while unattended as product funcionality or laboratory practice failures could occur that might lead to uncontrolled or excessive heating of the top surface. Safety procedures (including, but not limited to, unplugging when not in use) and response plans should be put in place to address the worst case possibility. If an over-temperature failure occurs, the top surface temperature could rise to the maximum temperature (300-540°C depending on your model's specification) and remain at that temperature indefinitely. Under these conditions, the material being heated on the surface of the hotplate could reach levels in excess of the maximum temperature.

Alert Signals

Warning
Warnings alert you to a possibility of personal injury.

Caution
Cautions alert you to a possibility of damage to the equipment.

Caution
KEEP TOP SURFACE CLEAN. Use a nonabrasive cleaner. Alkali spills, hydrofluoric acid spills or phosphoric acid spills may damage top. Unplug unit and remove spills promptly. Space unit 12 inches away from combustible materials under any conditions.

DO NOT use metal foil, metal vessels or other insulating material on top plate. Do not operate hot plate or stirring hot plate without a load evenly distributed on top plate. Top plate can be damaged.

Warnings

1. Do not immerse unit for cleaning.

2. As with all laboratory equipment, appropriate safety clothing, glasses, gloves and coats should be worn when operating hot plates. Always use appropriate hand and eye protection when handling hazardous chemicals.

3. DO NOT remove or modify grounded power plug. Use only properly grounded outlets to avoid shock hazard. Not rated for use in hazardous atmospheres.

4. Do not use in the presence of flammable or combustible chemicals; top surface and element can reach the "Flash Point Temperature" of many chemicals. THESE HOT PLATES ARE NOT EXPLOSION PROOF. Fire or explosion may result. Unit contains components which may ignite such materials.

5. "Caution: Hot Surface. Avoid Contact." The hot plate will remain hot without visual indication for some time after the power has been removed from the unit.

To avoid electrical shock:

1. Always use a properly grounded electrical outlet with correct voltage and current handling capacity.

2. Always disconnect the unit from the power supply prior to maintenance and servicing.

3. Refer servicing to qualified personnel.

THIS PRODUCT CONTAINS REFRACTORY CERAMIC, REFRACTORY CERAMIC FIBER OR FIBERGLASS (GLASS WOOL) INSULATION WHICH CAN PRODUCE RESPIRABLE FIBERS AND DUST WHEN HANDLED. THESE FIBERS OR DUSTS CAN CAUSE IRRITATION AND CAN AGGRAVATE PRE—EXISTING RESPIRATORY DISEASE. REFRACTORY CERAMIC INSULATIONS MAY CONTAIN OR MAY FORM CRYSTALLINE SILICA (CRYSTOBALITE) WHICH MAY CAUSE LUNG DAMAGE (SILICOSIS).

THE INTERNATIONAL AGENCY FOR RESEARCH ON CANCER (IARC) HAS CLASSIFIED REFRACTORY CERAMIC FIBER AND FIBERGLASS AS (2B) POSSIBLY CARCINOGENIC. IARC HAS CLASSIFIED CRYSTALLINE SILICA AS (2A) PROBABLY CARCINOGENIC.

The insulating materials are located in the door, the hearth collar, in the chamber of the product or the top plate assembly. Tests performed by the manufacturer indicate that there is no significant risk of exposure to dust or respirable fibers resulting from operation of this equipment under normal conditions. However, there may be a risk of exposure to respirable dusts or fibers when repairing or maintaining the insulating materials, or when otherwise disturbing the materials in a manner which causes release of dust or fibers therefrom. Through the use of proper handling procedures you can work safely with these insulating materials and minimize any exposure. Accordingly, before you repair or replace any insulating materials, or perform any other servicing on this product which could disturb or cause exposure to dust from insulating materials, you should consult the appropriate Material Safety Data Sheets (MSDS's) for such products with respect to proper handling and appropriate protective equipment. For additional MSDS's, or additional information concerning the handling of refractory ceramic products, please contact the Customer Service Department at 1-800-553-0039.

Introduction

Warning
Do not use in the presence of flammable or combustible chemicals; top surface and element can reach the "Flash Point Temperature" of many chemicals. THESE HOT PLATES ARE NOT EXPLOSION PROOF. Fire or explosion may result. Unit contains components which may ignite such materials.

The Thermolyne Type RC2200 Remote Control Hot Plate is a hot plate designed to provide a remote controlled uniform source of heat from ambient temperature to 371°C (700°F).

Electrical Ratings

RC2230	240 Volts	6.7 Amps	1600 Watts	50/60 Hz
RC2238	208 Volts	7.7 Amps	1600 Watts	50/60 Hz
RC2235	120 Volts	13.3 Amps	1600 Watts	50/60 Hz
RC2240	240 Volts	13.3 Amps	3200 Watts	50/60 Hz

Warning
Always use a properly grounded electrical outlet with correct voltage and current handling capacity.
DO NOT remove or modify grounded power plug. Use only properly grounded outlets to avoid shock hazard. Not rated for use in hazardous atmospheres.

Operation

Warning
Do not use in the presence of flammable or combustible chemicals; top surface and element can reach the "Flash Point Temperature" of many chemicals. THESE HOT PLATES ARE NOT EXPLOSION PROOF. Fire or explosion may result. Unit contains components which may ignite such materials. "Caution: Hot Surface. Avoid Contact." The hot plate will remain hot without visual indication for some time after the power has been removed from the unit.

As with all laboratory equipment, appropriate safety clothing, glasses, gloves and coats should be worn when operating hot plates. Always use appropriate hand and eye protection when handling hazardous chemicals.

Caution
When turning off the control, be sure the knob is in the "OFF" position and the indicator light is out.

Avoid operating the hot plate without a load, as doing so may cause damage to the top plate. To extend the life of your hot plate, vessels filled with water should be evenly distributed across the hot plate during heat-up and cool-down to aid in heat dissipation and reduce stress to the top plate. Gross weight of items placed on top of hot plate should not exceed 40 pounds.

The control adjusts the temperature of the hot plate by turning the power to the load on and off over short time intervals. The greater the percentage of the time power is on, the higher the temperature. The percentage of time on is equal to ten times the dial markings - for example, a setting of 4 will give approximately 40% time on. At the high position, power is on continuously and maximum temperature is obtained. The knob may be turned either to the right or left, including from the OFF position, to the desired input percentage. For fast heatup, turn the knob to HI. When the desired temperature is reached, reduce the setting to the point where the temperature will be maintained.

Maintenance and Servicing

Warning
"Caution: Hot Surface. Avoid Contact." The hot plate will remain hot without visual indication for some time after the power has been removed from the unit.

Refer servicing to qualified personnel.

Always disconnect the unit from the power supply prior to maintenance and servicing.

Do not immerse unit for cleaning.

With proper care, your remote controlled hot plate will give long service. After severe or extended use, some parts may become unserviceable — replacements are available from your dealer or the factory. A list of replacement parts is included for convenience in ordering. If preferred, the hot plate may be returned either to your dealer or the factory for repair.

Replacement Parts List

Remote Controlled Hot Plate, Series 410
Models: RC2230/RC2235/RC2238

Part # (Qty)	Exploded View Key #	Description
CN410X1	Ref. “A”	Complete Control Assembly, 120V
CN410X2	Ref. “A”	Complete Control Assembly, 240V
CN410X4	Ref. “A”	Complete Control Assembly, 208V
CNX60	6	Control switch, 120 volt
CNX61	6	Control switch, 240, 208 volt
CR410X1A	7	Cord set, 120 volt (control to line source)
CR410X2A	7	Cordset, 240 volt (control to line source)
CR410X3	8	Cord set (from hot plate to control)
EL410X1	2	Heating element, 120 volt
EL410X2	2	Heating element, 240 volt
EL410X3	2	Heating element, 208 volt
KBX23	4	Control knob
PLX35	5	Pilot light, 120 volt (also order 2 #WM217X31A wires)
PLX37	5	Pilot light, 240, 208 volt (also order 2 #WM217X31A wires)
PT410X1A	1	Plate, top
SRX26	3	For Cord Set (From hot plate to control)

Exploded Views

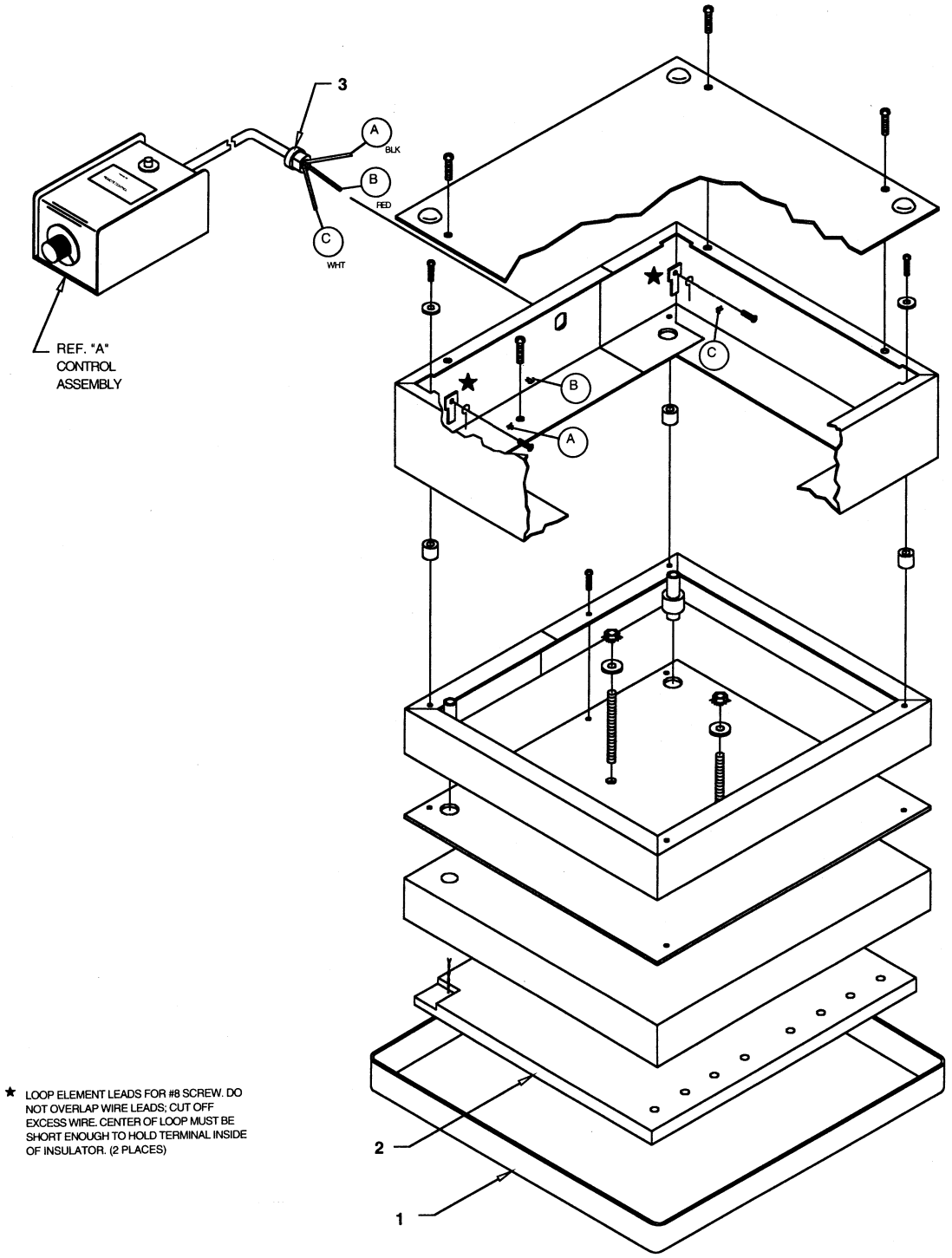

Exploded View 1, Series 410

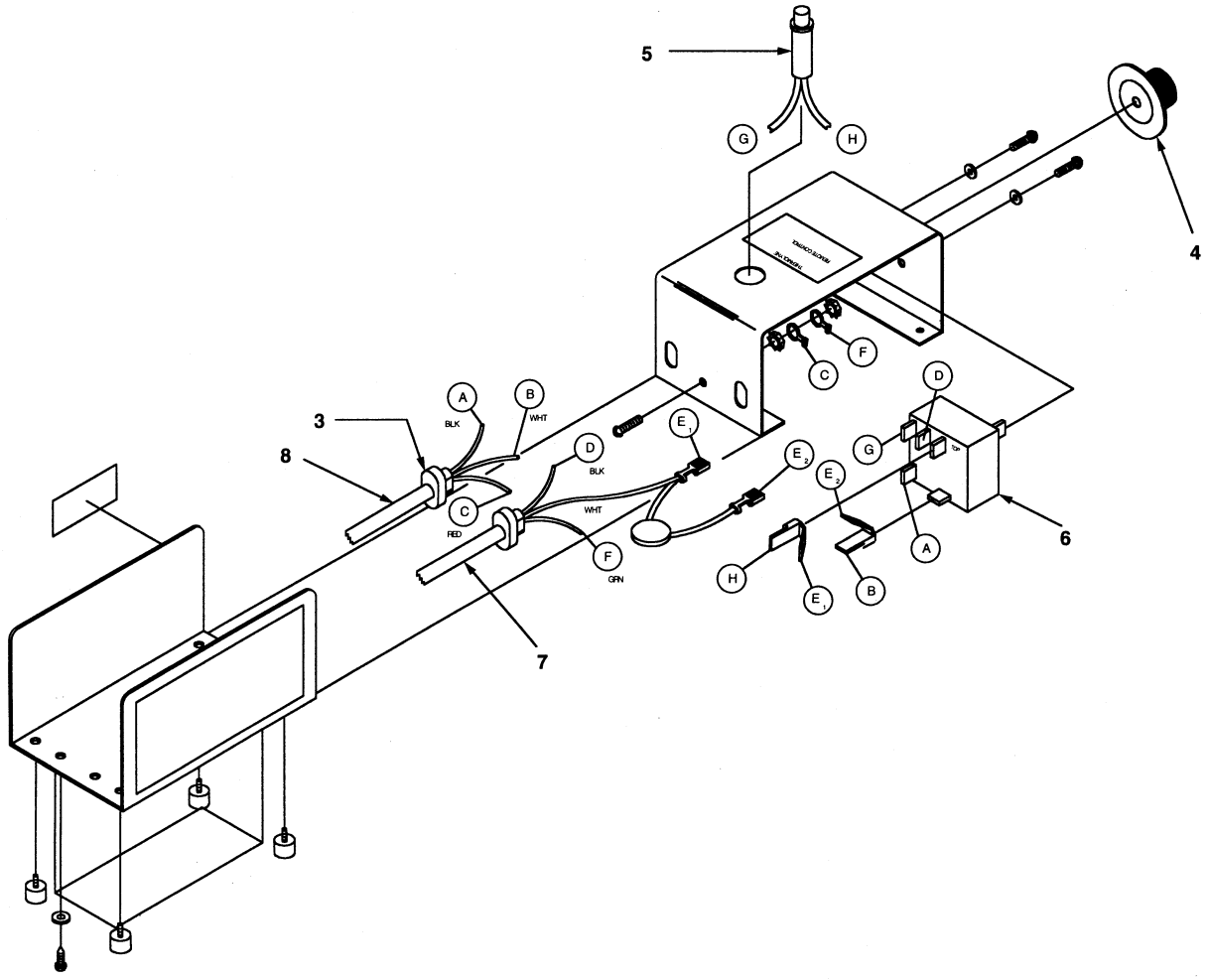

Exploded View 2, Series 410

Remote Controlled Hot Plate, Series 411
Models: RC2240

Part # (Qty)	Exploded View Key #	Description
CNX61	6	Control switch
CN411X1	Ref. “A”	Complete Control Assembly 240V
CR410X2A	7	Cord set (control to line source)
CR410X3	8	Cord set (from hot plate to control)
EL410X1 (2)	2	Heating element
KBX23	4	Control knob
PLX37	5	Pilot light (also order 2 #WM217X31A wires)
PT411X1A	1	Plate, top
SRX26	3	For cord set (from hot plate to control)

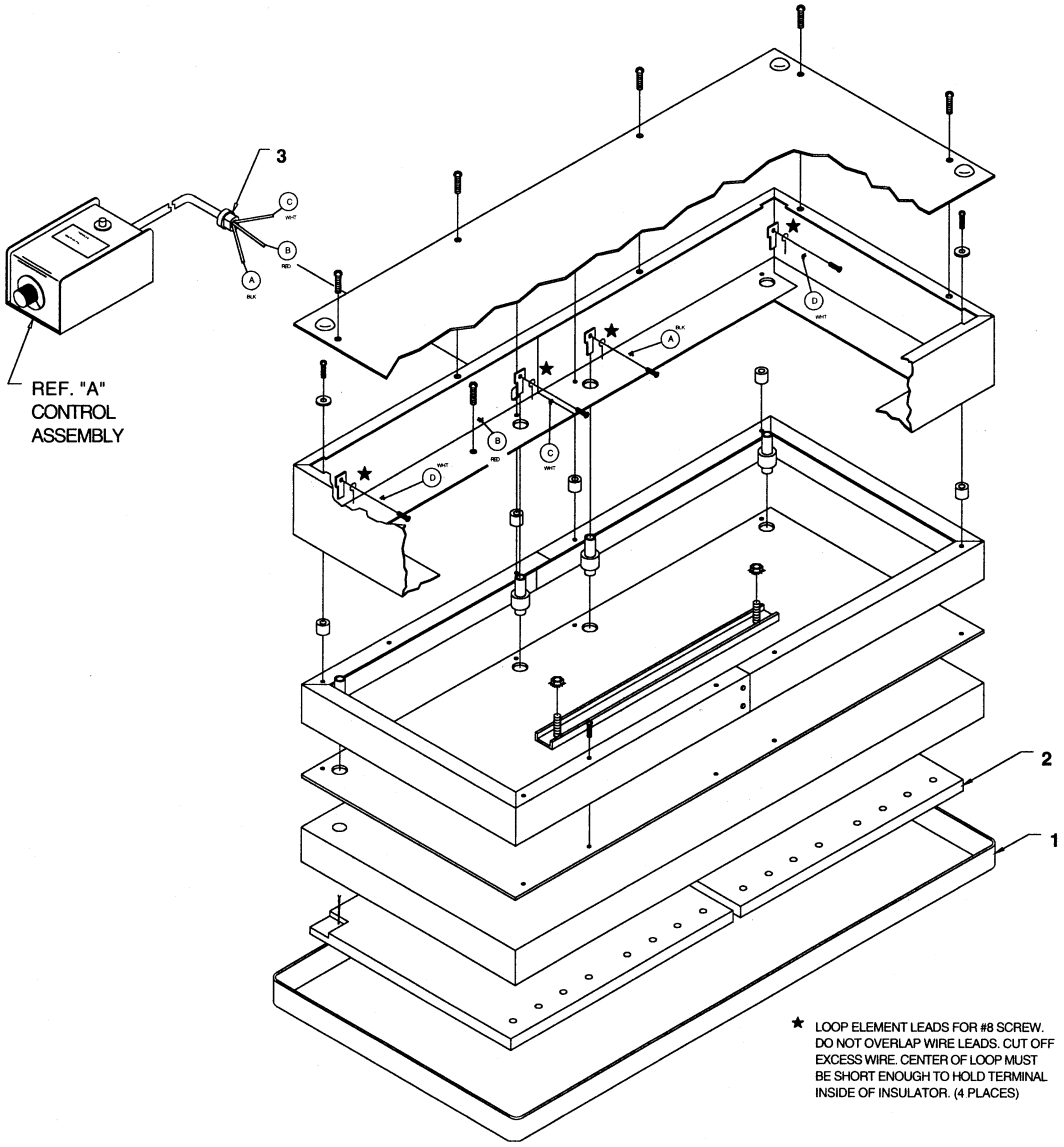

Exploded View 1, Series 411

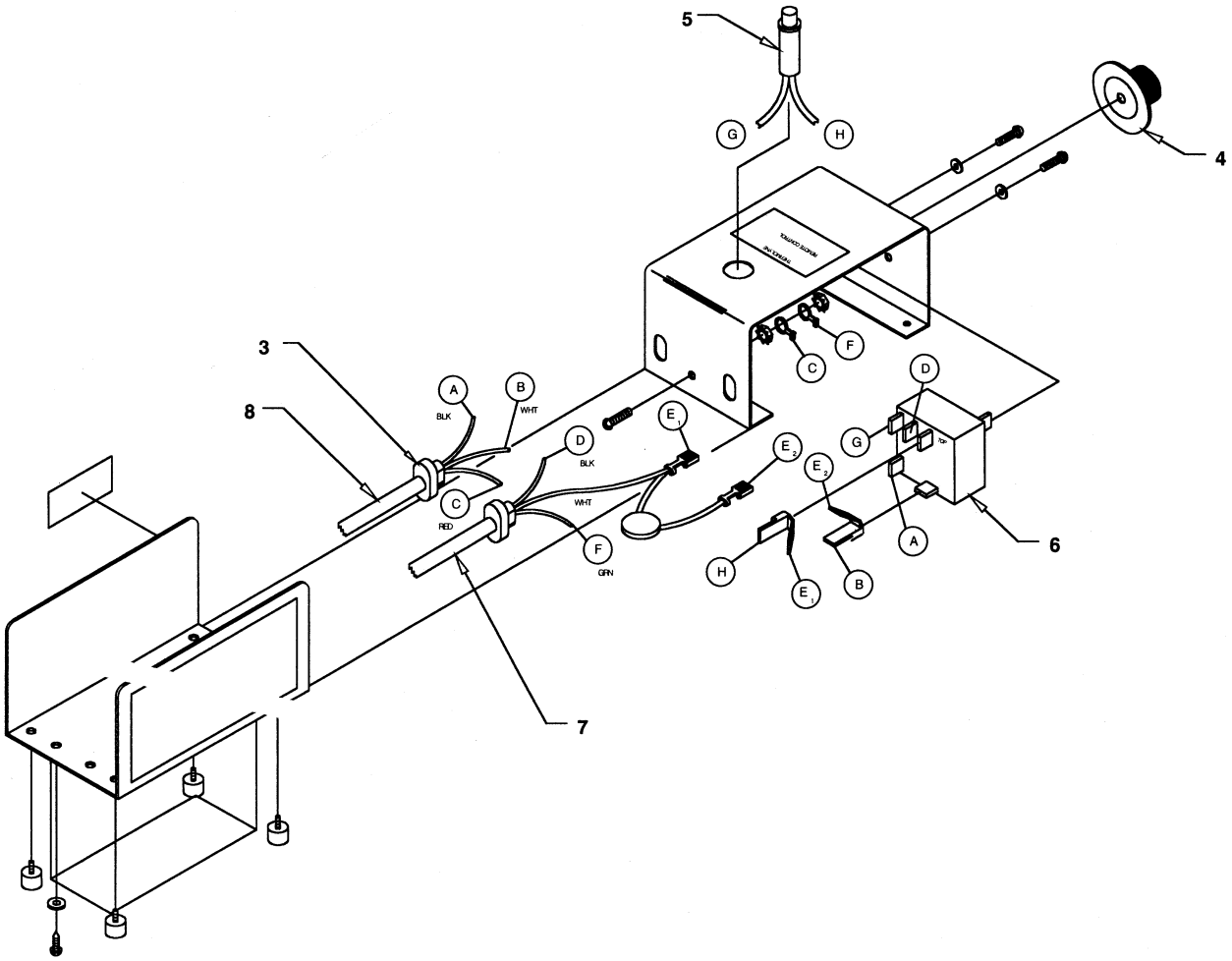

Exploded View 2, Series 411

Ordering Procedures

Please refer to the Specification Plate for the complete model number, serial number, and series number when requesting service, replacement parts or in any correspondence concerning this unit.

All parts listed herein may be ordered from the **Thermo Scientific** dealer from whom you purchased this unit or can be obtained promptly from the factory. When service or replacement parts are needed we ask that you check first with your dealer. If the dealer cannot handle your request, then contact our Customer Service Department at 563-556-2241 or 800-553-0039.

Prior to returning any materials, please contact our Customer Service Department for a “Return Materials Authorization” number (RMA). Material returned without an RMA number will be refused.

Wiring Diagram

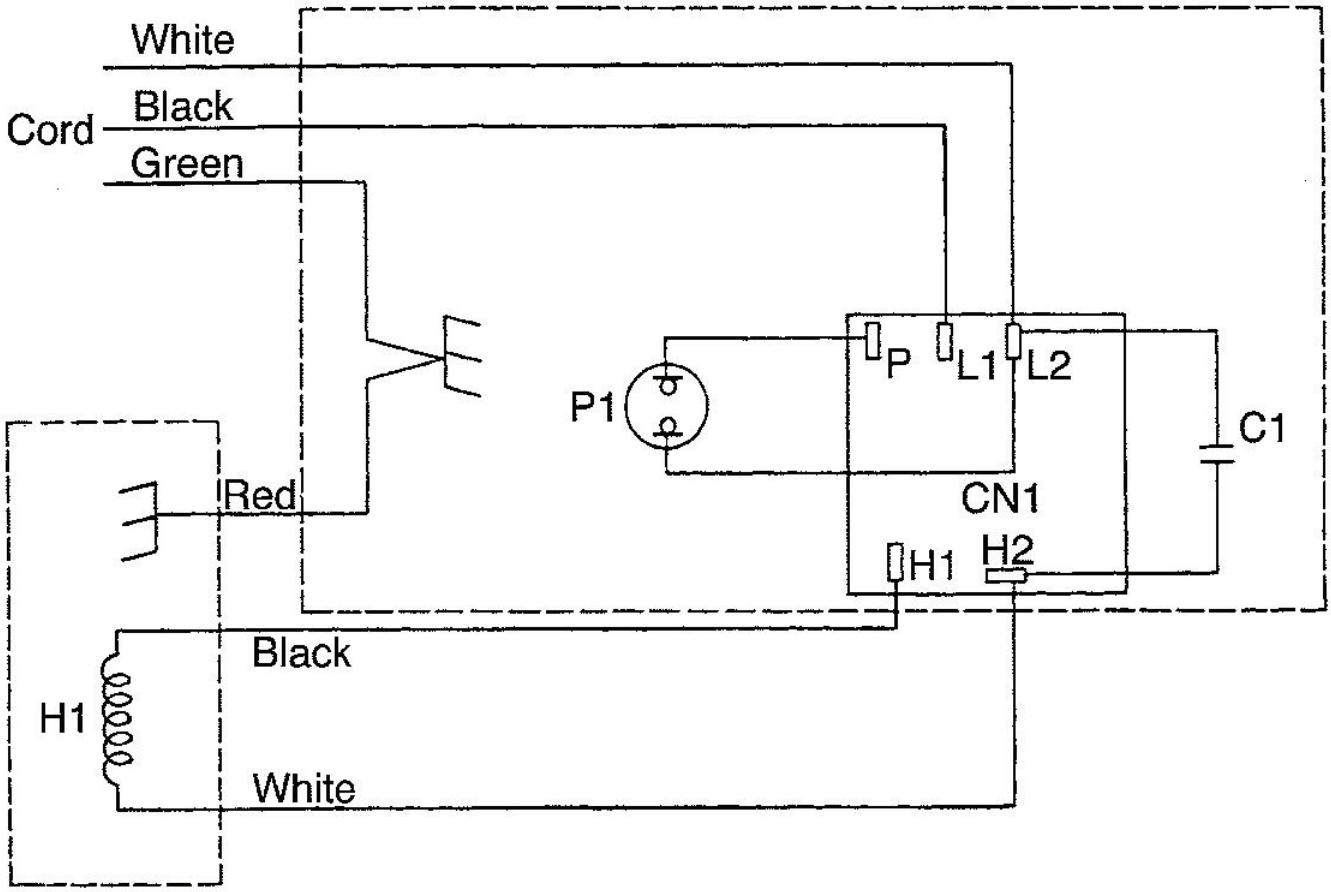

Two Year Limited Warranty

This Thermo Scientific product is warranted to be free of defects in materials and workmanship for two (2) years from the first to occur of (i) the date the product is sold by the manufacturer or (ii) the date the product is purchased by the original retail customer (the “Commencement Date”). Except as expressly stated above, the MANUFACTURER MAKES NO OTHER WARRANTY, EXPRESSED OR IMPLIED, WITH RESPECT TO THE PRODUCTS AND EXPRESSLY DISCLAIMS ANY AND ALL WARRANTIES, INCLUDING BUT NOT LIMITED TO, WARRANTIES OF DESIGN, MERCHANT ABILITY AND FITNESS FOR A PARTICULAR PURPOSE.

An authorized representative of the manufacturer must perform all warranty inspections. In the event of a defect covered by the warranty, we shall, as our sole obligation and exclusive remedy, provide free replacement parts to remedy the defective product. In addition, for products sold within the continental United States or Canada, the manufacturer shall provide free labor to repair the products with the replacement parts, but only for a period of ninety (90) days from the Commencement Date.

The warranty provided hereunder shall be null and void and without further force or effect if there is any (i) repair made to the product by a party other than the manufacturer or its duly authorized service representative, (ii) misuse (including use inconsistent with written operating instructions for the product), mishandling, contamination, overheating, modification or alteration of the product by any customer or third party or (iii) use of replacement parts that are obtained from a party who is not an authorized dealer of Thermo Scientific products.

Heating elements, because of their susceptibility to overheating and contamination, must be returned to the factory and if, upon inspection, it is concluded that failure is due to factors other than excessive high temperature or contamination, the manufacturer will provide warranty replacement. As a condition to the return of any product, or any constituent part thereof, to the factory, it shall be sent prepaid and a prior written authorization from the manufacturer assigning a Return Materials Number to the product or part shall be obtained.

IN NO EVENT SHALL THE MANUFACTURER BE LIABLE TO ANY PARTY FOR ANY DIRECT, INDIRECT, SPECIAL, INCIDENTAL, OR CONSEQUENTIAL DAMAGES, OR FOR ANY DAMAGES RESULTING FROM LOSS OF USE OR PROFITS, ANTICIPATED OR OTHERWISE, ARISING OUT OF OR IN CONNECTION WITH THE SALE, USE OR PERFORMANCE OF ANY PRODUCTS, WHETHER SUCH CLAIM IS BASED ON CONTRACT, TORT (INCLUDING NEGLIGENCE), ANY THEORY OF STRICT LIABILITY OR REGULATORY ACTION.

For the name of the authorized Thermo Scientific product dealer nearest you or any additional information, contact us:

2555 Kerper Blvd., Dubuque, Iowa, 52004-0797
Phone: 563-556-2241 or 1-800-553-0039
Fax: 563-589-0516
E-mail: mkt@thermofisher.com
Web: www.thermo.com