CIMAREC™

Magnetic Stirrer
BIOSYSTEM DIRECT
BIOSYSTEM
Operating Manual

50134801 Issue 03.2012

Directly and remote-controlled
single and multiple
magnetic stirring systems

Analyze • Detect • Measure • Control™

Thermo SCIENTIFIC

Thermo Electron LED GmbH is legal successor of H+P Labortechnik AG.

Thermo Electron LED GmbH

Robert-Bosch-Straße 1
D-63505 Langenselbold

Germany national toll free:
Phone Sales: 0800 1536376
Phone Service 0800 1112110
Fax: 0800 1112114

Germany international:
Phone: +49 6184 906940
Fax: +49 6184 906772

E-mail: info.labequipment.de@thermofisher.com
For further help see: www.thermofisher.com

Table of Contents

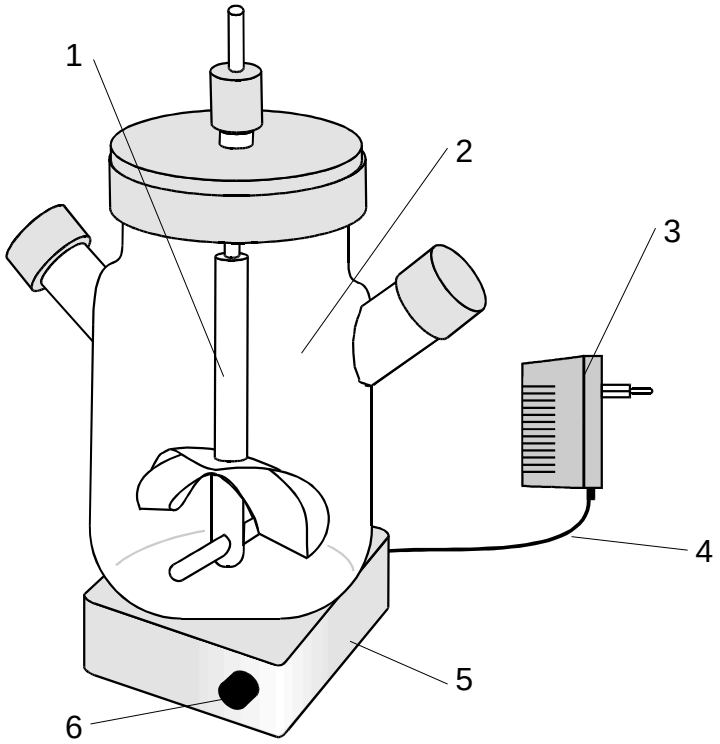

*1 stirring device**
*2 stirring vessel**
3 power supply
4 secondary cable
5 magnetic stirrer
6 rotation speed control button

Figure 1: Single magnetic stirring system BIOSYSTEM 1 with plug-in power supply unit.

*) Not included in scope of delivery.

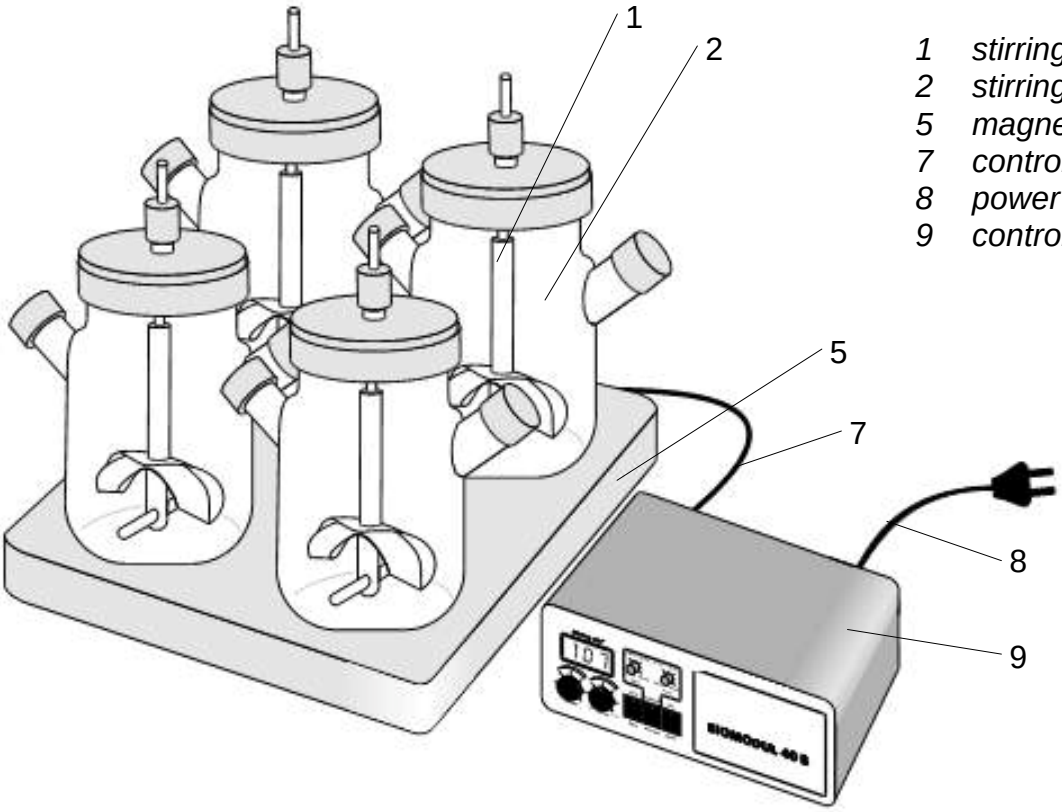

*1 stirring device**
*2 stirring vessel**
5 magnetic stirrer
7 control cable
8 power cable
9 control unit

Figure 2: Multiple magnetic stirring system BIOSYSTEM 4 B with control unit BIOMODUL 40 B.

*) Not included in scope of delivery.

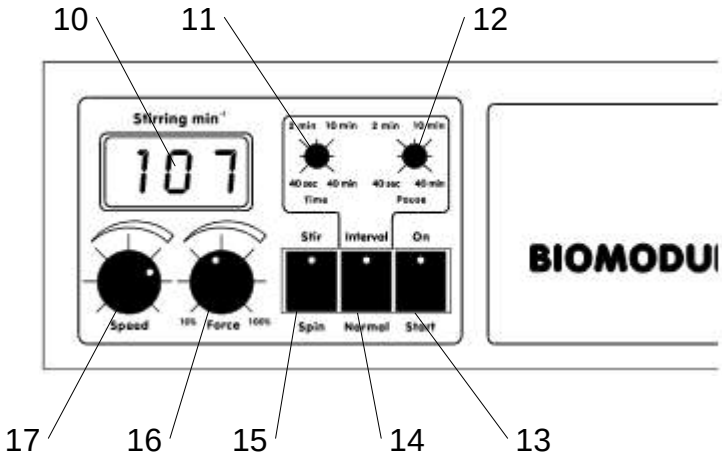

10 rotation speed indicator
11 stirring time control button
12 pause time control button
13 start/stop key
14 interval key
15 rotation direction key
16 Stirring power control button
17 rotation speed control button
18 power ON/OFF switch
19 power input
20 Output socket

Figure 3: Control unit BIOMODUL 40 B, front view

5

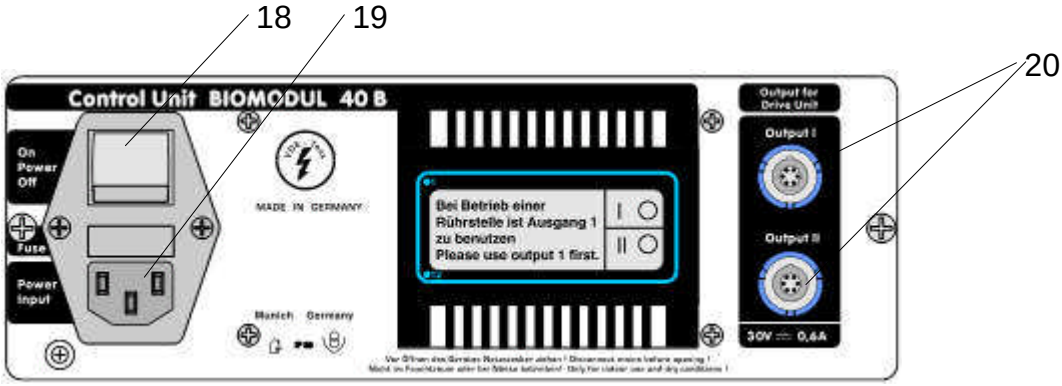

Figure 4: Control unit BIOMODUL 40 B, back view

.

1 User considerations

1.1 Correct use

The magnetic stirring systems BIOSYSTEM DIRECT and BIOSYSTEM are designed for stirring liquids in a laboratory or production environment. They are fitted with one, three or four stirring points. They are specifically designed for stirring shear-sensitive biological cultures without damaging the cells.

The stirring systems are suited to operation in the following areas:

- on the laboratory bench,
- in incubators,
- in gas incubators (CO_2 incubators) with or without air humidification,
- in cold chambers,
- in laminar flow equipments,
- in safety laboratories and sterile rooms,
- directly controlled BIOSYSTEM: under water baths,
- remote-controlled BIOSYSTEM in water baths.

1.2 Incorrect use

The magnetic stirring systems BIOSYSTEM DIRECT and BIOSYSTEM must not be operated in hazardous locations.

Do not stir flammable liquids with a low boiling point.

The directly controlled magnetic stirring system BIOSYSTEM must not be operated in a water bath.

1.3 Pictographs

You will find the following pictographs in this operating manual:

DANGER!
This sign refers to dangerous voltages.

DANGER!
This sign refers to hazardous situations.

CAUTION!
This sign indicates danger to equipment and machinery.

INFORMATION
This sign indicates easier working practices.

♦ Indicates an operating step.

⇨ Indicates alternatives.

2 Safety considerations

The device is compliant with the safety requirements of:

- EN 61010
- Low-voltage directive 73/23/EEC
- EMC directive 89/336/EEC

For your own safety, you should observe the following safety warning signs.

The safety warnings indicate a possible source of danger.
At the same time they contain information on how correct action can avert danger. You will always find warning signs attached to points of possible danger.

DANGER!

Magnetism.
Magnetic or metallic parts (e.g. data carriers, pacemakers, watches...) can be affected by magnetic fields.
Keep such parts away from the magnetic stirrer (5) and the stirring device (1).

DANGER!

Supply voltage and supply frequency must be within the range specified for the power supply unit (3) or the control unit (9).

DANGER!

Defective secondary cables (4), power cables, or mains plugs must be replaced only with original parts by the manufacturer or one of its representatives.
Return the defective power supply unit (3) to our customer service for repair.

DANGER

GLASS SPLINTER.
At high speeds of the mixing stick can lead to the destruction of the sample vessels.
Wear safety goggles!
The vortex should not reach the stirring bar.
The stirring bar must rotate in the center of the sample vessel.
Watch the rotational behavior of the mixing stick for slow starts

CAUTION!

The equipment must not be operated in hazardous locations.

CAUTION!

Permitted ambient conditions for the directly controlled BIOSYSTEM DIRECT:
Magnetic stirrer (5): -10° to + 56°C at 100 % humidity.
Power supply unit (3): +10° to + 40°C at max. 80 % humidity.
The magnetic stirrer (5) must not be operated in a water bath.
The power supply unit (3) must not be run in humid rooms, or set up in water splash zones.

CAUTION!

Permitted ambient conditions for the remote-controlled BIOSYSTEM :
Magnetic stirrer (5): -10° to + 56°C at 100 % humidity,
0° to + 50°C in a water bath.
Control unit (9): +10° to + 40°C at max. 80 % humidity.
The control unit (9) must not be run in humid rooms, or set up in water splash zones.

CAUTION!

The magnetic stirring system must be switched off before connecting or pulling the connector.
BIOSYSTEM DIRECT: The rotation speed control button (6) must always be brought to position OFF first.
BIOSYSTEM: Switch off control unit (9) using power ON/OFF switch (18).

CAUTION

High speed rotations of the stirring bar can cause a warming of the goods.

CAUTION

At high speeds of the magnetic stirring, too high power setting can lead to overheating of the stirred material.

CAUTION!

Do not place hot stirring vessels (2) on top of the magnetic stirrer (5). Max. temperature: 56°C.

CAUTION!

Do not use cleaning agents which attack and corrode the stainless steel surface of the magnetic stirrer (5).

CAUTION!

In case of repair, the equipment must only be opened by an authorised service agent.

CAUTION!

Do not allow the stirring device (1) to come to rest in an alternating magnetic field if the device is unable to rotate. Do not subject the stirring device (1) to a strong inverse magnetic field. This may cause the device to become demagnetised.

CAUTION

Do not allow AlNiCo5 type magnetic stirring bars to remain in an alternating magnetic field if they cannot rotate freely. Do not subject the magnetic stirring bar to a strong inverse magnetic field. This may cause the magnetic stirring bar to become demagnetized.

INFORMATION

The length of the magnetic stirring bar (2) must be smaller than the diameter of the magnetic coupling (tech. specification).

INFORMATION

Check the box, the parts delivered on completeness and visible damage.

INFORMATION

Use only appropriate sample containers! Review the sample containers prior to use for visible damage (cracks, tears, splinters, leakages, etc. ...)

INFORMATION

Use only suitable and undamaged magnetic stirrers! Check the stirring bar before use for signs of damage (cracks, chips ... etc.)

INFORMATION

Observe the relevant safety data sheets for chemical substances that you are working in the magnetic stirrer.

INFORMATION

Read the instructions carefully before using the magnetic stirrer. No application of the device by an untrained and inexperienced personnel.

INFORMATION

Use only in the instructions specified accessories, according to the illustrated configuration.

3 Equipment description

Figures 1 to 5 show the components together with their position numbers.

INFORMATION

Check the box, the parts delivered on completeness and visible damage.

The directly controlled magnetic stirring system BIOSYSTEM DIRECT is available as a single or multiple magnetic stirrer (5) and a separate power supply unit (3).
The remote-controlled magnetic stirring system BIOSYSTEM is available as a single or multiple magnetic stirrer (5) and a separate control unit (9).
The magnetic stirrer (5) is fitted with one, three or four stirring points. On the BIOSYSTEM 4 DIRECT and 4, the four stirring points are arranged in a block.

Directly controlled BIOSYSTEM DIRECT:
Power is supplied via the power supply unit (3). A secondary cable (4) on the power supply unit (3) is connected into the socket on the magnetic stirrer (5).
The rotation speed can be preset with the rotation speed control button (6). Following a soft start, the stirring device (1) will rotate at the preset speed. To terminate the stirring process, turn the rotation speed control button (6) slowly to position OFF. In this way the rotation speed will be gradually reduced to zero.

Remote-controlled BIOSYSTEM:
The control cable (7) connects the magnetic stirrer (5) with the control unit (9) BIOMODUL 40 B. The magnetic stirrer (5) is supplied with power and controlled via the control unit (9). It is connected to the mains supply with the power cable (8).
The control unit (9) BIOMODUL 40 B has all the controls necessary for an effective stirring operation:

- rotation speed control button (17) with digital rotation speed indicator (10)
- power adapted to the stirring task
- reversal of rotation direction
- continuous and interval operation

The stirring process is always started slowly and stopped slowly. The power ON/OFF switch (18) for the control unit (9) BIOMODUL 40 B is located at the back of the unit..
The control unit (9) can drive up to two magnetic stirrers (5) simultaneously. Two output sockets (20) are provided for this purpose at the back of the unit. The upper output socket (20) is always used first.

A separate power supply for both equipment types ensures a safe low voltage situation at the magnetic stirrer (5). Following a power failure, the magnetic stirrer (5) will come on again automatically.
Drive and electronic control system are inside the polished stainless steel housing of the magnetic stirrer (5), which is completely watertight. This prevents germs from penetrating into the inside of the magnetic stirrer (5). The magnetic stirrer (5) is cleared for use in safety laboratories and sterile rooms.

Stirring vessel (2) and stirring device (1) do not fall within the scope of delivery.

4 Function

You can use the magnetic stirring systems BIOSYSTEM DIRECT and BIOSYSTEM to stir liquids in one or several vessels simultaneously. They are used specifically with respect to the following cultures and suspensions for gentle stirring in the laboratory and in a production scale environment without damaging the cells:

- cell suspensions,
- tissue cultures,
- microcarrier cultures,
- culture baths.

You can stir the liquids in all commercially available culture flasks or bioreactors. As a stirring device (1) you can use suspension-type stirring magnets, agitator blades, paddles etc. capable of being moved by magnetic poles. Rotation speed control meets the requirements of biotechnology and will always start slowly and stir without jerking. When the stirrer is switched off, the rotation speed is slowly reduced to zero.

The stirring vessel (2) contains a suitable stirring device (1). When the stirring vessel (2) is placed on the stirring point, a rotating magnetic field will move the stirring device (1).

Remote-controlled BIOSYSTEM :
The rotation speed is adjusted using the rotation speed control button (17) and displayed on the rotation speed indicator (10).
You may choose between continuous stirring and interval operation. For interval operation, set the required stirring and pause times on the control unit (9). The rotation speed is reduced slowly at the end of every stirring period, and increased slowly at the end of every pause. You can use the rotation direction key (15) to maintain or reverse the direction of rotation after every pause.
Use the stirring power control button (16) to match the stirring power to the stirring task in hand. This will keep the heat emitted to the stirred medium to a minimum. Heat emission can also be reduced by working in the interval mode.
To stop and restart the stirring device (1), the control unit (9) is fitted with a start/stop key (13). The rotation speed is slowly reduced, and then slowly increased again.

5 Startup procedure

DANGER!
Supply voltage and supply frequency must be within the range specified for the power supply unit (3) or the control unit (9).

DANGER!
Magnetism.
Magnetic or metallic parts (e.g. data carriers, pacemakers, watches...) can be affected by magnetic fields.
Keep such parts away from the magnetic stirrer (5) and the stirring device (1).

DANGER
GLASS SPLINTER.
At high speeds of the mixing stick can lead to the destruction of the sample vessels.
Wear safety goggles!
The vortex should not reach the stirring bar.
The stirring bar must rotate in the center of the sample vessel.
Watch the rotational behavior of the mixing stick for slow starts

CAUTION!
The equipment must not be operated in hazardous locations.

CAUTION!
Permitted ambient conditions for the directly controlled BIOSYSTEM:
Magnetic stirrer (5): -10° to + 56°C at 100 % humidity.
Power supply unit (3): +10° to + 40°C at max. 80 % humidity.
The magnetic stirrer (5) must not be operated in a water bath.
The power supply unit (3) must not be run in humid rooms, or set up in water splash zones.

CAUTION!
Permitted ambient conditions for the remote-controlled BIOSYSTEM:
Magnetic stirrer (5): -10° to + 56°C at 100 % humidity,
0° to + 50°C in a water bath.
Control unit (9): +10° to + 40°C at max. 80 % humidity.
The control unit (9) must not be run in humid rooms, or set up in water splash zones.

CAUTION!
The magnetic stirring system must be switched off before connecting or pulling the connector.
BIOSYSTEM DIRECT: The rotation speed control button (6) must always be brought to position OFF first.
BIOSYSTEM: Switch off control unit (9) using power ON/OFF switch (18).

INFORMATION
Read the instructions carefully before using the magnetic stirrer. No application of the device by an untrained and inexperienced personnel.

Directly controlled BIOSYSTEM DIRECT:

- Turn rotation speed control button (6) to position OFF.
- Connect secondary cable (4) of power supply unit (3) into the jack at the back of the magnetic stirrer (5).
- Connect power supply unit (3) into mains socket.
- If a germ-free environment is required, accommodate the power supply unit (3) outside the sterile area.

Remote-controlled BIOSYSTEM:

- Switch the power ON/OFF switch (18) at the back of the control unit (9) to position OFF.
- Connect the control cable (7) to the upper output socket (20) at the back of the control unit (9).
  When connecting a second magnetic stirrer:
- Connect the control cable (7) of the second magnetic stirrer (5) to the lower output socket (20) at the back of the control unit (9).
- Connect the power cable (8) to the power input (19) on the control unit (9) and into the mains socket.
- If a germ-free environment is required, accommodate the control unit (9) outside the sterile area.

6 Stirring operation

6.1 Stirring vessels

CAUTION!

Do not place hot stirring vessels (2) on top of the magnetic stirrer (5). Max. temperature: 56°C.

Use as stirring vessels (2) bioreactors or culture flasks.

When stirring larger volumes of liquid, you should use stirring vessels (2) having a relatively small diameter with a thin bottom.

As a stirring device (1) you can use suspension-type stirring magnets, agitator blades, pendulum type stirring devices, paddles etc. capable of being moved by magnetic poles.

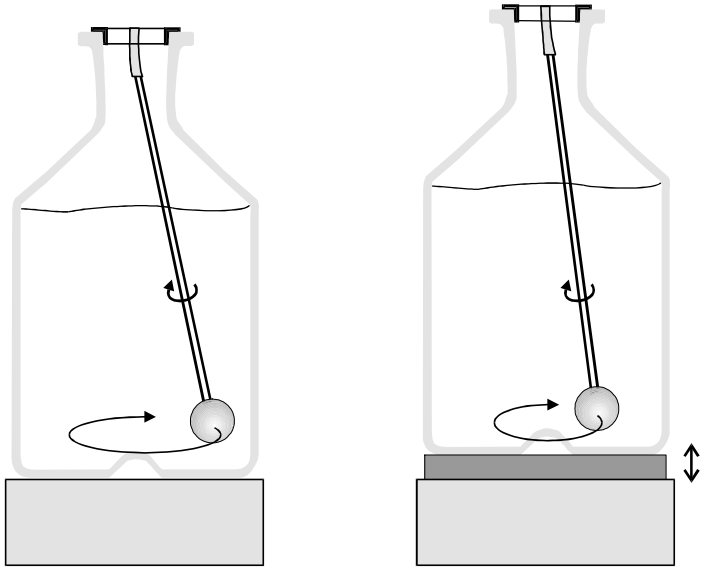

Figure 5: Stirring vessel with pendulum type stirring device.

If you use a pendulum type stirring device, you can vary the radius of the pendulum motion: the closer the agitating globe is to the stirring drive, the greater will be the radius of the pendulum motion (Figure 5, left). When you place the stirring vessel further away from the stirring drive (e.g. by using a spacer under the stirring vessel), the radius of the pendulum motion will be reduced (Figure 5, right).
Keep changing the distance between the stirring vessel (2) and the magnetic stirrer (5) until you achieve an optimum pendulum motion.

6.2 Magnetic stirring bars

INFORMATION

Use only suitable and undamaged magnetic stirrers! Check the stirring bar before use for signs of damage (cracks, chips ... etc.)

Thermo recommends the following magnetic stirring bars:

Typ	Size (mm)	Material	Order No.
KOMET 90	(Ø x L) 24 x 90	SmCo	50087902
Twin magnetic stirring bar	(L x B x H) 90 x 81 x 30 Rührstäbe: KOMET 90	SmCo	50087868
Magnetic stirring bar with bearing	(Ø x H) 146 x 48 stirring bar: KOMET 90	SmCo	50087869

INFORMATION

The length of the magnetic stirring bar (2) must be smaller than the diameter of the magnetic coupling (tech. specification).

INFORMATION

Some magnetic stirring bars (2) (especially triangular bars) may have a critical resonance frequency at lower rotation speeds. This may cause the magnetic stirring bar (2) to wander away from the turning center and carry out periodic oscillations. Avoid this rotation speed setting when the problem occurs. Quickly travel through this problem range when adjusting the rotation speed.

Thermo has developed a new magnetic stirring bar **KOMET 90** (Figure 2). It contains a high-quality super-strong samarium-cobalt magnet. KOMET 90 shows a strong magnetic force. The stronger attraction to the magnetic alternating field provides the stirring bar with very efficient stirring properties. Even if there are greater distances (e.g. in high measuring cylinders) the stirring force will be maintained. The stability of the stirring bar will not be impaired if the vessel has a curved bottom. The strong magnetic coupling in samarium-cobalt magnets will also increase friction. The standard design of the KOMET magnetic stirring bar is therefore unsuitable for stirring liquids containing particulate matter (such as mud) or for stirring in vessels with a rough interior surface. Some of the KOMET stirring bars were specially fitted with a wear-resistant glide ring for use under excruciating circumstances, such as when stirring vessels feature rough plastic or stainless-steel bottoms or if the media to be stirred contain solids (Figure 3).

Any risk of demagnetization by external magnetic fields is completely eliminated. All KOMET series stirring bars can be readily recognized by their two conical ends.

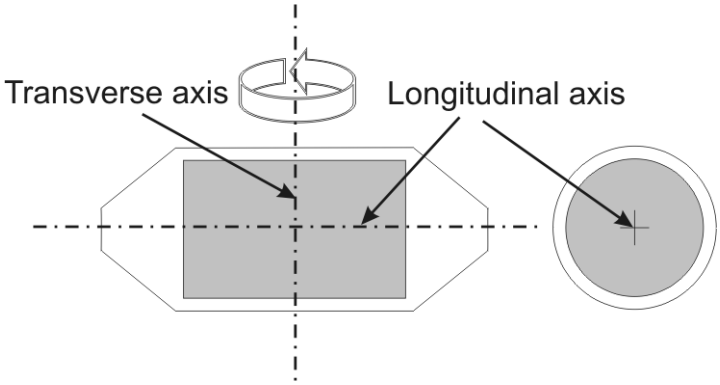

Figure 1: Stirring bar **KOMET 90** (Order No. 50087902).
Side view (left) and cross-section through central portion (right).

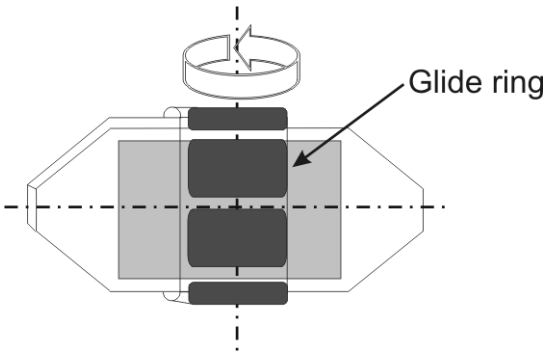

Figure 2: **KOMET** stirring bar with glide ring

If you are working with stirring vessels having rough plastic or stainless steel surfaces, you should use a twin magnetic stirring bar (suspension not included in scope of delivery). It is equipped with two magnetic stirring bars KOMET 90. The stirring bar is suspended from the top into the stirring vessel and kept away from the bottom (Figure 4). Alternatively, it can be fixed at the bottom of the stirring vessel with the aid of a centering device (centering device not included in scope of delivery).

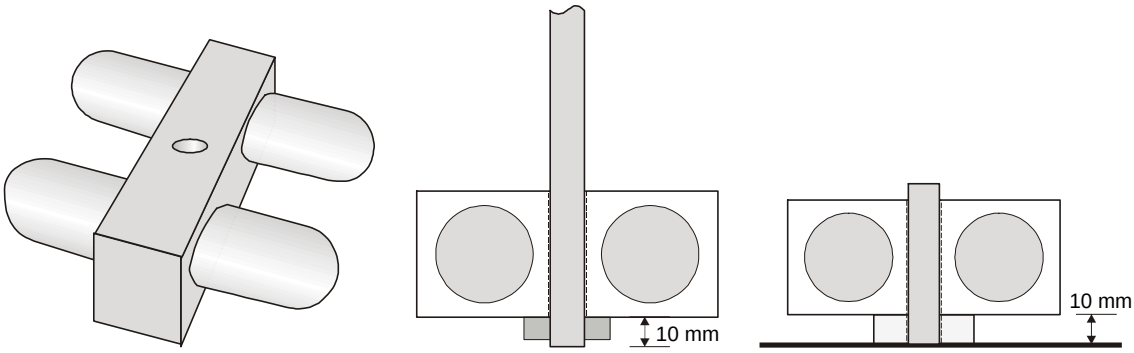

Figure 3: Twin magnetic stirring bar (left, Order No. 50087868). Cross-section through stirring bar suspended from top (centre), or fixed at the bottom of the stirring vessel (right).

In addition, a magnetic stirring bar incorporating a bearing can be supplied as an accessory item (Figure 4). It can be kept in place safely inside the stirring vessel. Only use this stirring bar at lower or medium rotation speed.

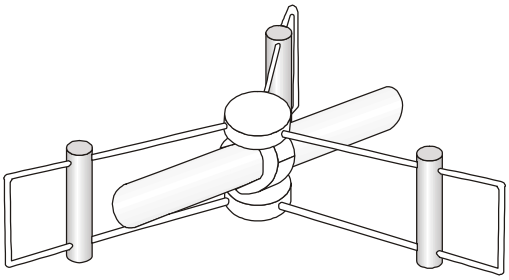

Figure 4: Magnetic stirring bar with bearing (Order No. 50087869)

To improve the slide characteristics of the magnetic stirring bar, you can place a stirring disc into the stirring vessel (Figure 6). It consists of a flat glass or PTFE disc and a screen. The latter prevents the magnetic stirring bar from escaping in a sideways direction. When using the stirring disc, take care to note that it will not rotate of its own accord. Affix it to the bottom of the vessel, for example.

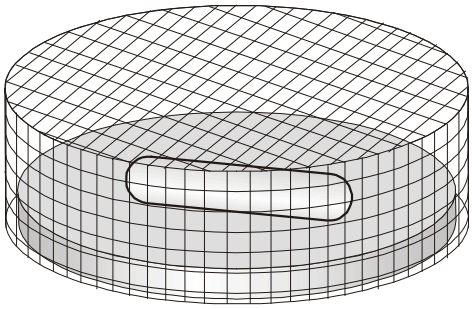

Figure 5: Stirring disc with screen

6.3 Recommended rotation speed ranges

CAUTION
High speed rotations of the stirring bar can cause a warming of the goods.

We recommend the following rotation speed ranges for various applications:

Application	Speed range (rpm)
Microbiological and biotechnical applications:	
Aeration of bacteria cultures Growth of bacteria cultures Dissolving nutrient mediums, intense aeration of bacteria cultures	200 - 350 300 - 450 350 - 500
Routine laboratory work:	
Prevent accretion of suspended matter Titration Dissolving solids Improved heat transmission Chemical reactions	150 - 250 250 - 400 350 - 700 300 - 600 100 - 1000

6.4 Stirring

DANGER!
Magnetism.
Magnetic or metallic parts (e.g. data carriers, pacemakers, watches...) can be affected by magnetic fields.
Keep such parts away from the magnetic stirrer (5) and the stirring device (1).

DANGER
GLASS SPLINTER.
At high speeds of the mixing stick can lead to the destruction of the sample vessels.
Wear safety goggles!
The vortex should not reach the stirring bar.
The stirring bar must rotate in the center of the sample vessel.
Watch the rotational behavior of the mixing stick for slow starts

CAUTION
High speed rotations of the stirring bar can cause a warming of the goods.

CAUTION!

Do not place hot stirring vessels (2) on top of the magnetic stirrer (5). Max. temperature: 56°C.

INFORMATION

Use only suitable and undamaged magnetic stirrers! Check the stirring bar before use for signs of damage (cracks, chips ... etc.)

INFORMATION

Observe the relevant safety data sheets for chemical substances that you are working in the magnetic stirrer.

Directly controlled BIOSYSTEM:

- Fill the stirring vessel (2).
- Suspend the stirring device (1) into the stirring vessel (2).
- Turn the rotation speed control button (6) to position OFF.
- Center the stirring vessel (2) onto the stirring point.
- Set the desired rotation speed with the rotation speed control button (6).

The stirring device (1) will start rotating slowly. At the end of the start-up phase, the stirring device will run at the preset rotation speed.

- To stop the stirring process, turn the rotation speed control button (6) to position OFF.

Remote-controlled BIOSYSTEM:

- Fill the stirring vessel (2) and center it onto the stirring point.
- Suspend the stirring device (1) into the stirring vessel (2).
- Switch on the control unit (9) with the power ON/OFF switch (18).

The green LED display in the start/stop key (13) will light up.

- Push the start/stop key (13) twice, and hold it down.
  Now set the desired rotation speed with the rotation speed control button (17).

The set rotation speed is immediately displayed on the digital rotation speed indicator (10).

⇨ **Continuous operation:**

- Lock the interval key (14) to position NORMAL.

The yellow LED display in the interval key (14) will not light up.

⇨ **Interval operation:**

- Lock the interval key (14) to position INTERVAL.

The yellow LED display in the interval key (14) will light up.

- Set the desired stirring time with the stirring time control button (11).
- Set the desired pause time with the pause time control button (12).

The rotation speed is reduced slowly at the end of every stirring period, and increased slowly at the end of every pause. You can choose to maintain or reverse the direction of rotation after every stirring interval.

- If you want to reverse the direction of rotation, lock the rotation direction key (15) to position STIR.
  The yellow LED display in the rotation direction key (15) will light up.

- ♦ If you do not want to reverse the direction of rotation, lock the rotation direction key (15) to position SPIN.
  The yellow LED display in the rotation direction key (15) will not light up.

⇨ **Power adaptation:**

CAUTION

At high speeds of the magnetic stirring, too high power setting can lead to overheating of the stirred material.

- **High** stirring power for large stirring volumes, high rotation speed, viscous mediums, and when several stirring drives are driven simultaneously,
- **Low** stirring power for small stirring volumes, low rotation speed, mediums resembling water, and when there is a requirement for heating the standing surface, or heat emission in the incubator.
- ♦ Set the desired stirring power with the stirring power control button (16).

Take care to note the turning motion of the stirring device (1). It should turn evenly and smoothly without jerking.

⇨ **Manual stop and stirring restart:**

- ♦ Hold down the start/stop key (13).
  The rotation speed will be slowly reduced to zero.
- ♦ Release the start/stop key (13).
  The rotation speed will be slowly increased to the preselected rotation speed.

⇨ **If you want to terminate the stirring process:**

- ♦ Switch off the control unit (9) using the power ON/OFF switch (18).

7 Maintenance and cleaning

CAUTION!

Do not use cleaning agents which attack and corrode the stainless steel surface of the magnetic stirrer (5).

The equipment is maintenance-free.

Clean the surfaces of the magnetic stirrer (5) at regular intervals.
For this purpose you can use

- water containing a surfactant detergent additive,
- isopropylalcohol.

♦ BIOSYSTEM DIRECT: Turn the rotation speed control button (6) to position OFF.
♦ BIOSYSTEM: Switch off the control unit (9) using the power ON/OFF switch (18).
♦ Pull the mains plug of the control unit (9) or the power supply unit (3).
♦ Clean the surfaces of the magnetic stirrer (5).

Where the surface of the magnetic stirrer (5) has become severely soiled, you may clean it using a water jet or a disinfectant solution.

DANGER!

Defective secondary cables (4), power cables, or mains plugs must be replaced only with original parts by the manufacturer or one of its representatives.
Return the defective power supply unit (3) to our customer service for repair.

CAUTION!

In case of repair, the equipment must only be opened by an authorised service agent.

In case of necessity to repair the equipment, it should be returned to an authorized servicing agent. The equipment must be clean and free from harmful substances.
To avoid transport damages during the shipment, please send the equipment correctly packed in the original packing.

Please always enclose the filled out return delivery note.

If necessary ask for the return delivery note at **Thermo** (address: see inside of the cover sheet).
In case of ordering spares, please state equipment type and serial number.

You can obtain further technical documents (e.g. circuit diagrams, board data) for your engineers by contacting the address on the inside of the cover sheet.

8 Troubleshooting

- **Rotation of the stirring device (1) is uneven:**
  - ♦ Check to see that the stirring vessel (2) is **centered** on the stirring point mark.
  - ♦ Check the bearing of the stirring device (1) for dirt, adhesion or wear.
    Clean the bearing, or replace the stirring device (1).
  - ♦ Check to see that the magnet of the stirring device (1) is correctly positioned in the rotating magnetic field (Figure 6a):
    It should not sit too high (Figure 6b) , or be too long (Figure 6c).
  - ♦ Check to see whether the stirring device (1) comes into contact with the base of the vessel (Figure 6d). If this is the case, raise and fix the stirring device (1) at a higher point.

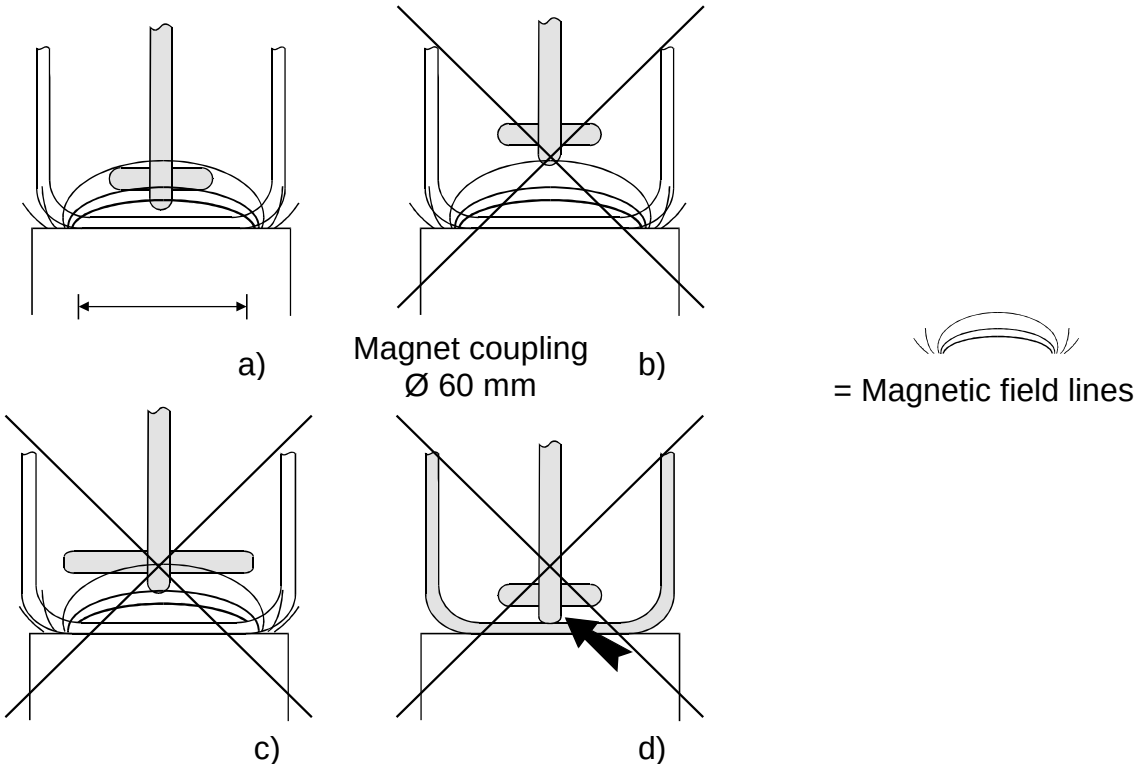

Figure 6: Positioning of stirring device.

It is unavoidable that the stirring device (1) will age with time. This may adversely effect the stirring device's magnetic properties.

- ♦ Dispose of this stirring device (1) and replace it with a new one.

CAUTION!

Do not allow the stirring device (1) to come to rest in an alternating magnetic field if the device is unable to rotate. Do not subject the stirring device (1) to a strong inverse magnetic field. This may cause the device to become demagnetised.

- **A stirring point fails at high rotation speed:**

The magnetic stirring system has been operated above its power limit, or the viscosity of the medium has increased. The magnetic stirring system is no longer able to transmit the required stirring power..
But the stirring system has **not** been damaged.

- ♦ Reduce the stirring volume or the size of the stirring vessel.
- ♦ BIOSYSTEM DIRECT: reduce the speed with the rotation speed control button (6).
- ♦ BIOSYSTEM: reduce the speed with the rotation speed control button (17).
  Or increase the stirring power with the stirring power control button(16).

Or the stirring device (1) is mechanically blocked:

- ♦ Check to see whether excess friction (e.g. dirt in the bearing) is preventing the stirring device (1) from turning.
- ♦ Check to see whether the stirring device (1) comes into contact with the base of the vessel (Figure 6d). If this is the case, raise and fix the stirring device (1) at a higher point.

Following these corrective measures, the stirring point should start again and drive the stirring device (1) evenly.
If this is not the case, then the equipment has become damaged and will have to be returned for repair.

- **The standing surface of the magnetic stirrer (5) heats up:**

Under unfavourable installation conditions, the temperature of the standing surface may be approx. 5°C above the ambient temperature.

If the resulting heat transfer to the stirring vessel (2) or the incubator is to be prevented, you should take the following steps:

- ♦ Make sure the installation site for the magnetic stirrer (5) is well ventilated.
- ♦ Place the magnetic stirrer (5) on a grating.
- ♦ Place a thermal insulating shield between the stirring vessel (2) and the standing surface of the magnetic stirrer (5).
- ♦ BIOSYSTEM: reduce the stirring power as far as possible using the stirring power control button (16).

9 Accessories

INFORMATION

Use only in the instructions specified accessories, according to the illustrated configuration.

- **Immersible thermostat (Order No. 50087884)**

According to DIN 12879, Safety Class 0.
Adjustable temperature range +25° to +60°C, temp. fluctuation 0.3°C,
Variable excess temperature fuse (temperature monitor), heat output 1.5 kW.
Mains connection 230 V/ 50-60 Hz.

- **Immersible thermostat (Order No. 50087875)**

According to DIN 12879, Safety Class 0.
Adjustable temperature range +25° to +95°C, temp. fluctuation 0.3°C,
Variable excess temperature fuse (temperature monitor), heat output 1.5 kW.
Mains connection 230 V/ 50-60 Hz.

- **Immersible thermostat (Order No. 50087876)**

According to DIN 12879, Safety Class 0.
Adjustable temperature range +25° to +60°C, temp. fluctuation 0.3°C,
Variable excess temperature fuse (temperature monitor), heat output 1.5 kW.
Mains connection 115 V/ 50-60 Hz.

- **Immersible thermostat (Order No. 50087867)**

According to DIN 12879, Safety Class 0.
Adjustable temperature range +25° to +95°C, temp. fluctuation 0.3°C,
Variable excess temperature fuse (temperature monitor), heat output 1.5 kW.
Mains connection 115 V/ 50-60 Hz.

10 Technical Specifications

Directly controlled magnetic stirring system BIOSYSTEM

Type		BIOSYSTEM DIRECT	BIOSYSTEM 4 DIRECT
Order No. (incl. power supply)	Version EC Version US Version UK Version JP Version AU	50088071 50088058 50088057 50101524 50088064	50088061
Order No. (without power supply)		50134957	50134958
Stirring points		1	4
Distance	mm	-	185
Stirring volume	ml	250 - 5000	100 - 2000
Stirring power	W	1	4 x 0,5
Speed range	1/min	5 - 120	
Magnet coupling	mm	∅ 60	
Dimensions (B x T x H)	mm	180 x 180 x 60	330 x 330 x 60
Weight	kg	3,4	10
Housing		Stainless steel	
Permissible ambient temperature	°C	Magnetic stirrer (5): -10 to +56 at 100% humidity Power supply: +10 to +40 at max. 80% humidity	
Operating voltage	VDC	12	18
Protection*		IP 66	
Accessories		Immersible thermostat, Connecting cable, Culture vessels	

*) The jack located at the back of the magnetic stirrer (5) is not protected.

Subject to technical alterations

Power supplies for magnetic stirrer BIOSYSTEM (4) DIRECT:

Type		BIOSYSTEM DIRECT	BIOSYSTEM 4 DIRECT
Order no. Power supply	Version EC Version US Version UK Version JP Version AU	50114811 50114810 50114814 50114825 50087992	50087976
Primary voltage/ frequency	VAC/Hz	EC: 230/50-60 US: 115/50-60 UK: 230/50-60 JP: 100/50-60 AU: 240/50-60	100-240/50-60
Secondary voltage	VDC	12	18
Permissible operating conditions		+10 °C to +40 °C at 30 % to 75 % relative humidity 700 to 1060 hPa barometric pressure	
Permissible storage conditions		-40 °C to +70 °C, at max. 80 % relative humidity, 500 to 1060 hPa barometric pressure	

Subject to technical alterations

Remote-controlled magnetic stirring system BIOSYSTEM:

Type		BIOSYSTEM	BIOSYSTEM 4
Order No.(without control unit)		50134955	50134956
Stirring points		1	4
Distance	mm	-	185
Stirring volume	ml	500 – 20.000	50. – 5.000
Stirring power	W	0,4 - 4	
Speed range	1/min	5 - 120	
Magnet coupling	mm	∅ 60	
Dimensions (B x T x H)	mm	180 x 180 x 60	330 x 330 x 60
Weight	kg	3,4	9
Housing		Stainless steel	
Permissible ambient temperature	°C	magnetic stirrer (5) -10° to +56° at 100% humidity 0° to +50° in a waterbath control unit (9): +10° to +40° at max. 80% humidity	
Operating voltage	VDC	30	30
Protection magnetic stirrer		IP 68	
Equipment construction		acc. to IEC 1010	
Cable		controller interface cable, about 2 m (reliable installation!)	
Accessories		Immersible thermostat, connecting cable, culture vessel	

Control unit		BIOMODUL 40 B
Order No.	Version EC Version US	50134966 50134965
Input voltage/ frequency	VAC/Hz	EC: 220-240/50-60 US: 110-120/50-60
Protection Mark of conformity Cable		protection class I IP 20 CE primary cabel, about 2 m
Permissible operating conditions		+10 °C to +40 °C at 30 % to 75 % relative humidity 700 to 1060 hPa barometric pressure
Permissible storage conditions		-40 °C to +70 °C, at max.80 % relative humidity, 500 to 1060 hPa barometric pressure

Subject to technical alterations

11 Warranty

VARIOMAG Magnetic stirrers have a modular construction and offer the greatest possible degree of trouble-free operation, thanks to their maintenance-free stirring and magnetic drives.

If despite our strict quality controls a system component should ever fail to work perfectly, it can be repaired or replaced by our after-sales service with no difficulty. Please retain your invoice, which will be needed when presenting any warranty claims.