User Manual

MaxQ High Performance Console

Incubated Orbital Shaker*

Operating and Maintenance Manual 7030435 Rev. 0

Visit us online to register your warranty
www.thermoscientific.com/labwarranty

Thermo
SCIENTIFIC

from cover:

* Triple counter-balanced, single eccentric drive mechanism (U.S. Patent #5,558,437)
* Horizontal, HEPA-filtered airflow design (U.S. Patent #5,577,837)
* Test tube rack (U.S. Patent #5,632,388)

Models covered by this manual:			
Model	**Number**	**Voltage, Frequency**	**Temperature Control**
SHKE435HP	435	120VAC, 60Hz	Incubated
SHKE436HP	436	230VAC, 50Hz	Incubated

MANUAL NUMBER 7030435

0	28036/OS-751	9/8/14	Release 13 (435), Release 8 (436) - new control board	ccs
REV	**ECR/ECN**	**DATE**	**DESCRIPTION**	**By**

Important Read this instruction manual. Failure to read, understand and follow the instructions in this manual may result in damage to the unit, injury to operating personnel, and poor equipment performance. ▲

Caution All internal adjustments and maintenance must be performed by qualified service personnel. ▲

Warning Use MaxQ SHKE435HP/SHKE436HP Orbital Shaker to process non-flammable materials only! ▲

Warning Grounding circuit continuity is vital for safe operation of this shaker. Never operate this unit with the grounding circuit disconnected. ▲

Material in this manual is for information purposes only. The contents and the product it describes are subject to change without notice. Thermo Fisher Scientific makes no representations or warranties with respect to this manual. In no event shall Thermo be held liable for any damages, direct or incidental, arising out of or related to the use of this manual.

When translated into other languages, the US English version of this manual is binding.

©2014 Thermo Fisher Scientific. All rights reserved.

Important operating and/or maintenance instructions. Read the accompanying text carefully.

Potential electrical hazards. Only qualified persons should perform procedures associated with this symbol.

Hot surface(s) present which may cause burns to unprotected skin, or to materials which may be damaged by elevated temperatures.

Equipment being maintained or serviced must be turned off and locked off to prevent possible injury.

Marking of electrical and electronic equipment, which applies to electrical and electronic equipment falling under the Directive 2002/96/EC (WEEE) and the equipment that has been put on the market after 13 August 2005.

This product is required to comply with the European Union's Waste Electrical & Electronic Equipment (WEEE) Directive 2002/96/EC. It is marked with the WEEE symbol. Thermo Fisher Scientific has contracted with one or more recycling/disposal companies in each EU Member State European Country, and this product should be disposed of or recycled through them. Further information on Thermo's compliance with this directive, the recyclers in your country and information on Thermo Scientific products will be available at www.thermofisher.com.

- ✔ Always use the proper protective equipment (clothing, gloves, goggles, etc.)
- ✔ Always dissipate extreme cold or heat and wear protective clothing.
- ✔ Always follow good hygiene practices.
- ✔ Each individual is responsible for his or her own safety.

Do You Need Information or Assistance on Thermo Scientific Products?

If you do, please contact us 8:00 a.m. to 6:00 p.m. (Eastern Time) at:

1-740-373-4763	Direct
1-800-438-4851	Toll Free, U.S. and Canada
1-877-213-8051	FAX
http://www.thermoscientific.com	Internet Worldwide Web Home Page
service.led.marietta@thermofisher.com	Tech Support Email Address
www.unitylabservices.com	Certified Service Web Page

Our **Sales Support** staff can provide information on pricing and give you quotations. We can take your order and provide delivery information on major equipment items or make arrangements to have your local sales representative contact you. Our products are listed on the Internet and we can be contacted through our Internet home page.

Our **Service Support** staff can supply technical information about proper setup, operation or troubleshooting of your equipment. We can fill your needs for spare or replacement parts or provide you with on-site service. We can also provide you with a quotation on our Extended Warranty for your Thermo Scientific products.

Whatever Thermo Scientific products you need or use, we will be happy to discuss your applications. If you are experiencing technical problems, working together, we will help you locate the problem and, chances are, correct it yourself...over the telephone without a service call.

When more extensive service is necessary, we will assist you with direct factory trained technicians or a qualified service organization for on-the-spot repair. If your service need is covered by the warranty, we will arrange for the unit to be repaired at our expense and to your satisfaction.

Regardless of your needs, our professional telephone technicians are available to assist you Monday through Friday from 8:00 a.m. to 6:00 p.m. Eastern Time. Please contact us by telephone or fax. If you wish to write, our mailing address is:

Thermo Fisher Scientific
401 Millcreek Road, Box 649
Marietta, OH 45750

International customers, please contact your local Thermo Scientific distributor.

Table of Contents

Section 1 Installation 1-1
Pallet Hold-down Shipping Brackets 1-2
Location 1-2
Install the Cabinet Stand-off Bolts 1-2
Chamber Drain 1-3
Condensate Drain 1-3
Foot Pedal 1-3
Installing the Platform 1-4
Assemble Flask Clips 1-6
Install Flask Clips 1-7
Install Test Tube Holders 1-8
RS-232 Interface Connector 1-9
Connect the Remote Alarm 1-11
Lid Security Lock 1-11
Connect to Electrical Power 1-12

Section 2 Operation 2-1
Control Panel Operation 2-2
Quick Start-Up 2-3
Factory Default Settings 2-3
Change Temperature, Speed & Time Settings 2-4
Change Temperature 2-4
Change Speed 2-5
Change Time 2-5
Change from Hold to Countdown 2-5
Shaker Alarms 2-6
Overtemp Shutdown 2-7
Cycle Complete 2-7
Power Failure 2-8
RPM Tracking 2-8
Check Belt 2-8
Sensor Fault 2-9
Temperature High or Low 2-9
Platform Stalled 2-9
Check Fuse 2-10
Change Configuration 2-10
Turn the Audible Alarm On and Off 2-11
Set Alarm Limits 2-11

Section 2 (continued)
Remote Alarm System 2-14
Cycle Complete 2-14
Power Failure 2-14
RPM Tracking 2-15
Check Belt 2-15
Sensor Fault 2-15
Temperature High or Low 2-15
View Total Operating Hours 2-16
Heat % 2-16
Software Version 2-17
Overtemp Sensor Readings 2-17
Menu Map 2-18

Section 3 Maintenance 3-1
Platform and Cabinet Cleaning 3-1
Control Panel 3-1
Cleaning or Replacing Air Filter 3-1
Preventive Maintenance 3-2

Section 4 Service 4-1
Alarms and Alarm Conditions 4-1
Change HEPA Filter 4-2
If the Shaker Will Not Operate 4-2
Spare Fuses 4-2
Circuit Boards 4-4
Temperature Sensors 4-5
Blower Fan Motors and Heating Elements 4-5
Heater Element Circuit Breaker 4-6
Tune the Cabinet 4-6
Service the Drive Belt 4-6
Calibrate Speed (RPM) 4-7
Calibrate the Temperature 4-8
Alarm Messages 4-9

Section 5 Specifications 5-1

Section 6 Parts List 6-1

Section 7 Electrical Schematics 7-1

Section 8 Warranty Information 8-1

Section 1 Installation

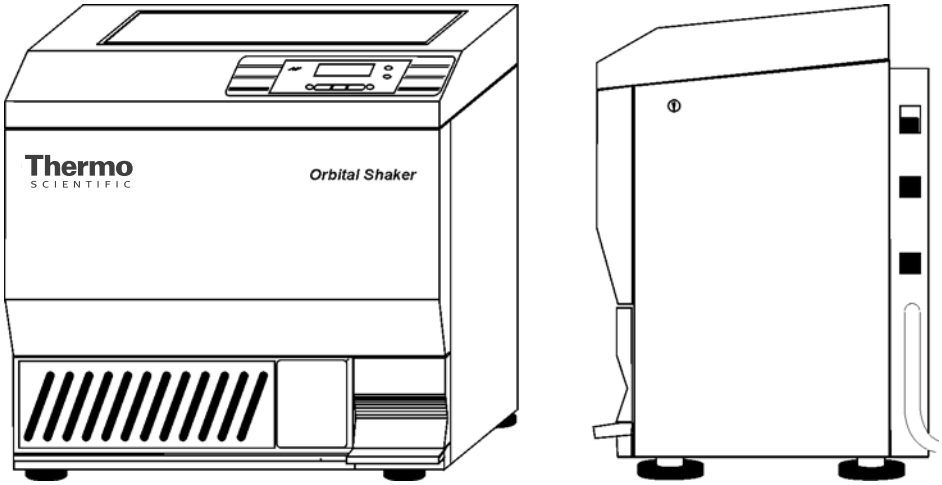

Figure 1-1. MaxQ SHKE435/SHKE436HP Console Incubated Orbital Shaker

The shipping carton should be inspected upon delivery. When received, carefully examine for any shipping damage before unpacking. If damage is discovered, the delivering carrier should specify and sign for the damage on your copy of the delivery receipt.

Open the carton carefully making certain that all parts are accounted for before packaging materials are discarded. After unpacking, if damage to any of the contents is found, promptly report it to the carrier and request a formal damage inspection.

Important Failure to request an inspection of damage within a few days after receipt of shipment absolves the carrier from any liability for damage. Call for a damage inspection promptly. ▲

Model SHKE435HP and SHKE436HP Console Orbital Shakers are shipped with the following materials:

2 - Keys for the lid lock (packaged and attached to outside of unit)
1 - T-handle 5/32” hex wrench
2 - Platform alignment studs ¼-20
1 - Shaker platform
6 - Grade 8, 5/32” hex socket flat head screws (provided with platform)
2 - 3/4” Open end wrench
2 - ¼-20 x 7” Stand-off bolts with rubber caps
1 - Phillips screwdriver for flask clip installation and removal
1 - 8¾” Phillips screwdriver for flask clip installation and removal
1 - Line cord (country of destination)

Pallet Hold-down Shipping Brackets

To secure the console shaker to the shipping pallet, hold-down brackets are attached to slots in both sides of the cabinet. The brackets are fastened to the wood pallet with lag screws (Figure 1-2).

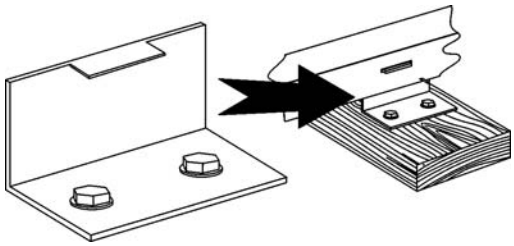

Figure 1-2. Bracket

Location

Install the shaker on a firm, level surface in an area free of dust and dirt. To allow for lid opening, the back of the shaker must be at least 4 ½ inches from the wall. As the electrical plug is the “mains disconnect” for the unit, the electrical wall outlet must remain accessible at all times.

Install the Cabinet Stand-off Bolts

To maintain the 4½ inch minimum distance between the rear of the unit and the wall to allow for unobstructed lid opening, two ¼-20x7” bolts are included in the parts bag.

Screw the bolts into the threaded holes on the back of the shaker cabinet (Figure 1-3). The bolts should be screwed in by hand to the limit of the threads. Further tightening is unnecessary. Put the protective rubber caps, also supplied in the parts bag, over the heads of the bolts.

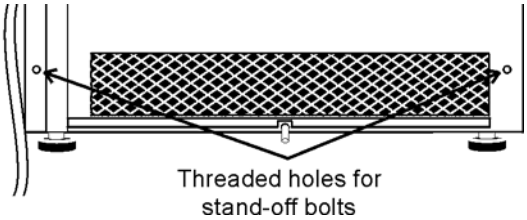

Figure 1-3. Rear View

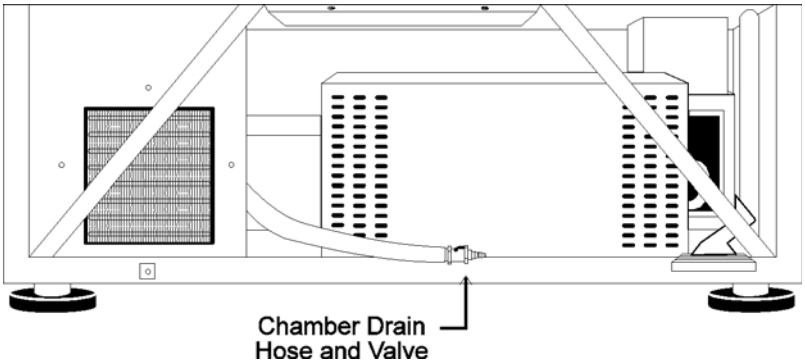

Figure 1-4. Chamber Drain Hose Location

Chamber Drain

A drain is provided in the bottom of the chamber for convenience when cleaning or removing spills (Figure 1-4). A clear vinyl hose and plastic valve is connected to the drain and accessed by removing the front grille assembly and the lower front panel. The grille is removed by gently pulling it off. It is held in place by six push-in type retainers.

To remove the cabinet panel located in back of the grille, remove the six Phillips screws; three on the top and three on the bottom. It may also be necessary to loosen the two left side Phillips screws which hold the foot pedal assembly to the shaker frame.

Condensate Drain

A 1/4” stainless steel condensate drain is located on the back of the shaker to remove any water that may collect in the air ductwork. Refer to Figure 1-5.

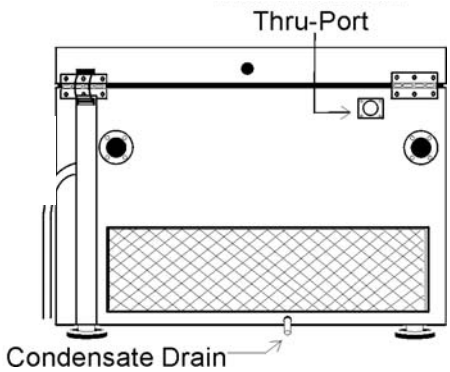

Figure 1-5. Drain Location

Foot Pedal

The lid of the console shaker is counterbalanced for ease of opening and closing. A foot pedal on the lower right of the front of the cabinet is also provided for operator convenience and ready access to the chamber.

Installing the Platform

Note If your platform is already installed, skip this section and continue to next section. ▲

Caution Remove the shipping bracket and install the shaker platform before plugging in or attempting to operate the unit. ▲

After removing the orbital mechanism shipping bracket and installing the platform, remove this protective decal from the control panel to begin shaker operation.

Figure 1-6. Warning Decal

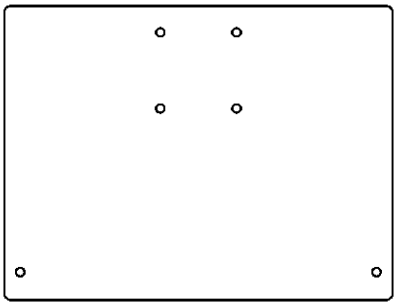

Figure 1-7. Shipping Bracket

To protect the shaker's orbital mechanism during shipment, a sheet metal shipping bracket (Figure 1-7) is installed and must be removed before the unit can be operated. Using a 7/16" and 9/16" hex wrench, remove the three 1/4" and the single 3/8" screws. Retain this hardware for future shipping.

This shaker accommodates either a 5/16" nominal heavy-duty, 29.5" wide x 18" front-to-back platform.

All shaker platforms are attached to their orbital mechanisms with six 1/4-20 hex socket flathead screws Grade 8. These screws are hardened and should not be exchanged with any other screw type. The 5/32" hex socket wrench, included with the shaker, must be used when attaching the platform. Refer to Figure 1-8.

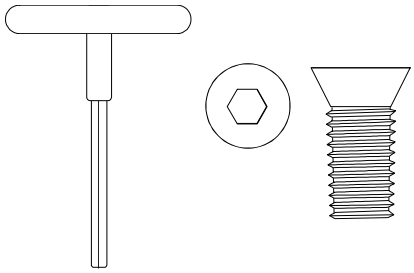

Figure 1-8. T-Handle Wrench and Hex Socket Head Screw

Caution Do not attempt to use a Phillips head screwdriver. ▲

Installing the Platform (continued)

1. Insert the two 1/4-20 alignment pins into the two mounting holes identified in Figures 1-9 and 1-10.

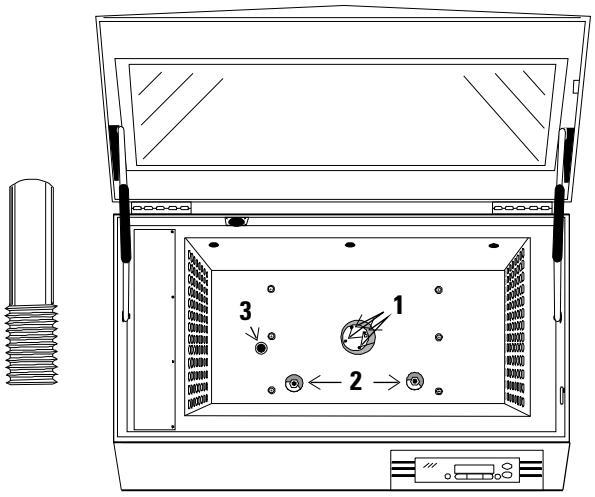

1) Platform mounting holes on drive mechanism (4)

2) Platform mounting studs (2). Insert alignment pins.

3) Chamber drain

Figure 1-9. Hole Locations (Universal Shaker Platform Shown)

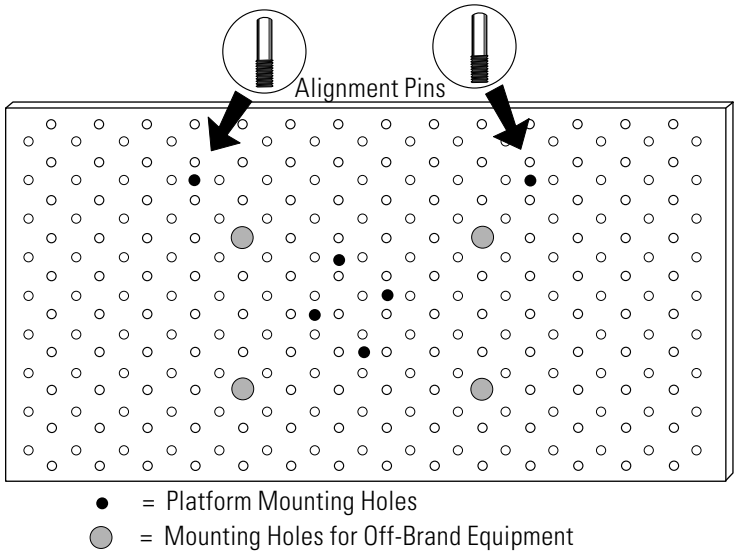

Figure 1-10. Hole Locations

2. Rotate the drive mechanism until the four mounting holes generally match the holes in the platform.

3. Place the platform onto the shaker and over the alignment pins.

Installing the Platform (continued)

4. Move the platform in an orbital motion until one or more of the center mounting holes are located.
5. Insert the hex socket head screws as the four holes are located. Do not tighten the screws.
6. Remove the ¼-20 alignment pins and replace them with the remaining two hex socket screws.
7. Tighten all screws using the T-handle wrench.

Caution Use only the hex socket flat screws to fasten the platform, and only the T-handle wrench to tighten the screws. Torque these screws to 10 ft-lbs. Check these screws monthly if the unit is operated at or near maximum speed (525 RPM). ▲

Assemble Flask Clips

Each Flask Clip up to 6.0 liters in size comes with a metal spring that must be installed onto the clip. For flask clips through 500 ml, insert the end of each spring into the holes at the top of the clip leg (Figure 1-11).

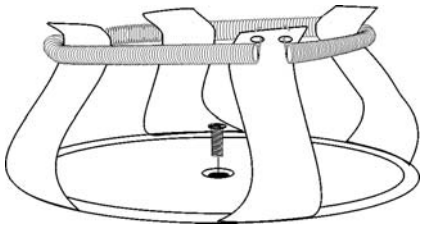

Figure 1-11. Clip Mounting Screw

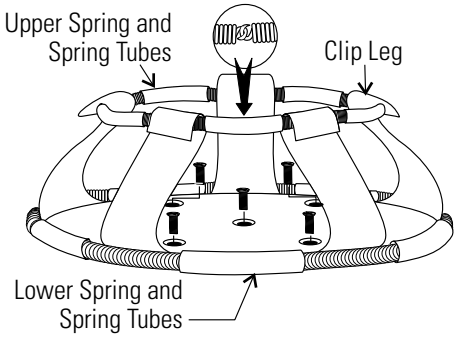

Figure 1-12. Clip Components

The 2 liter, 2.8 liter, 4 liter, 5 liter, and 6 liter Flask Clips use two sets of metal springs and rubber spring tubes. On these larger clips, the springs are installed by hooking their ends together as illustrated in Figure 1-12. The upper spring and spring tubes should be installed prior to mounting the clip to the platform. The lower spring and spring tubes, however, are placed around the bottom of the clip legs after the flask clip is fastened to the platform.

Note that the rubber spring tubes are placed between the clip legs.

Install Flask Clips

Model SHKE435HP and SHKE436HP shakers accommodate glassware in numbers and sizes from ninety-one 25 ml flasks to four 6 liter flasks. All platforms have mounting holes for flask clips and test tube racks made by other manufacturers. Listed below are the dedicated platform kits available for these shakers.

Table 1-1. Dedicated Platform Kits

Dedicated Platform Number	No. of Clips	Flask Size (ml)	Springs per Clip	Screws per Clip
238017	91	25	1	1
238018	91	50	1	1
238019	39	125	1	1
238051	30	250/300	1 (w/ 1 lg pad)	1
238021	24	500	1	1
238022	15	1 L	1	5
238023	12	2 L	2 (w/ 10 tubes)	5
238024	6	4 L	2 (w/ 10 tubes)	5
238054	6	5L	2 (w/ 12 tubes)	5
238025	4	6 L	2 (w/ 12 tubes)	5
238026	6	2.8 L	2 (w/ 10 tubes)	5
238020	40	250/300	1 (w/ lg pad)	1

Flask clips can be attached anywhere on the platform and flasks can be inserted into any flask clip as the counter-balanced design of these shakers compensates for unbalanced loads.

The flask clips are supplied with the proper screws and can be attached to the platform with a standard Phillips screwdriver or the screwdriver provided with the unit.

Figures 1-11 and 1-12 illustrate the installation of the flask clips. Note that clips for 1, 2, 2.8, 4, 5, and 6 liter flasks use five screws. The 250/300ml flask clip has an adhesive-backed flask cushion pad that is installed on the flat base of the clip body. A hole is provided in the pad for the mounting screw.

Install Test Tube Holders

The Accessory Test Tube Racks and Test Tube Rack Holders are available in four sizes and are listed in Table 1-2.

Table 1-2. Test Tube Racks and Holders

Part No.	Description
950040	Test Tube Rack, 10-13 mm size
950060	Test Tube Rack, 16-20 mm size
600074	Test Tube Rack, 21-25 mm size
600075	Test Tube Rack, 26-30 mm size
600076	Adjustable-Angle Test Tube Holder w/ Rack, 10-13mm
600077	Adjustable-Angle Test Tube Holder w/ Rack, 16-20mm
600078	Adjustable-Angle Test Tube Holder w/ Rack, 21-25mm
600079	Adjustable-Angle Test Tube Holder w/ Rack, 26-30mm
600088	Universal Adjustable-Angle Test Tube Holder, 10-25mm
600089	2 Tier Micro-Plate Rack
600090	3 Tier Micro-Plate Rack
194024	#10-24 pan head Phillips screws for mounting holders to platforms

All the Test Tube Rack Holders are adjustable into seven positions, swinging and locking at 15°, 30° and 45° in either direction. Figure 1-13 illustrates the Test Tube Rack Holder with rack in place. To remove the rack, spread the metal tabs on either end of the holder and lift out the plastic Test Tube Rack.

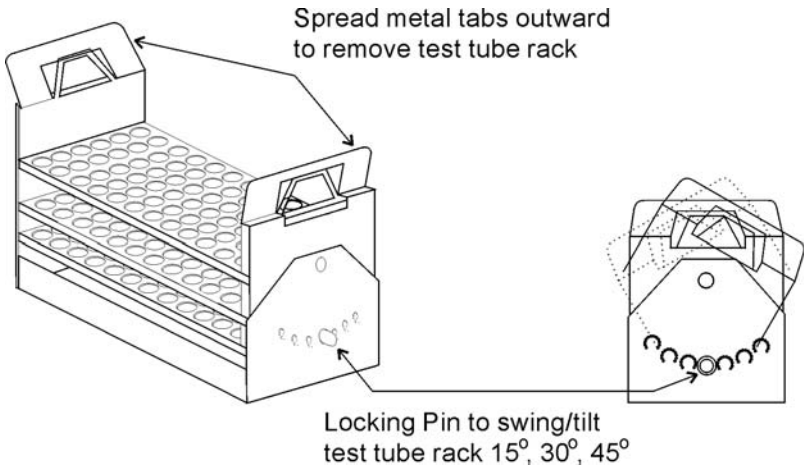

Figure 1-13. Test Tube Rack Holder

Install Test Tube Holders (continued)

To install the Test Tube Rack Holder onto the shaker platform, remove the rack and rotate the swing-bed of the holder 90° by pulling the knobs of the locking pins on either end of the holder outward. The pins are locked outward by turning the knob 1/4-turn (Figure 1-14). Attach the tray to the platform with the screws provided.

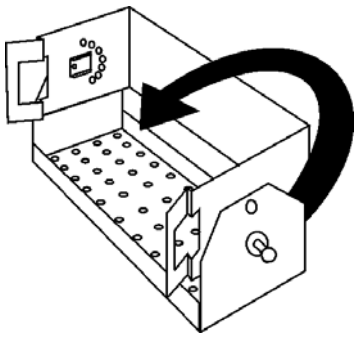

Figure 1-14. Rotate Rack

RS-232 Interface Connector

The MaxQ Console Orbital Shaker is equipped with an RS-232 Serial Communication Interface for the remote transmission of data. An RJ-11 telephone style connector is located on the left side of the incubator. A cable with RJ-11 plugs and an RJ-11 to DB-25 adapter are required. Refer to Figure 1-18 for connector locations on the shaker back panel. Figure 1-15 identifies the RS-232 and Remote Alarm pin contacts.

The data is "dumb terminal" formatted, which permits interfacing with either a computer or a serial printer.

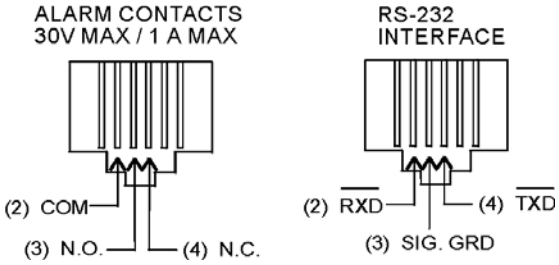

Figure 1-15. RS-232 and Remote Alarm Connectors

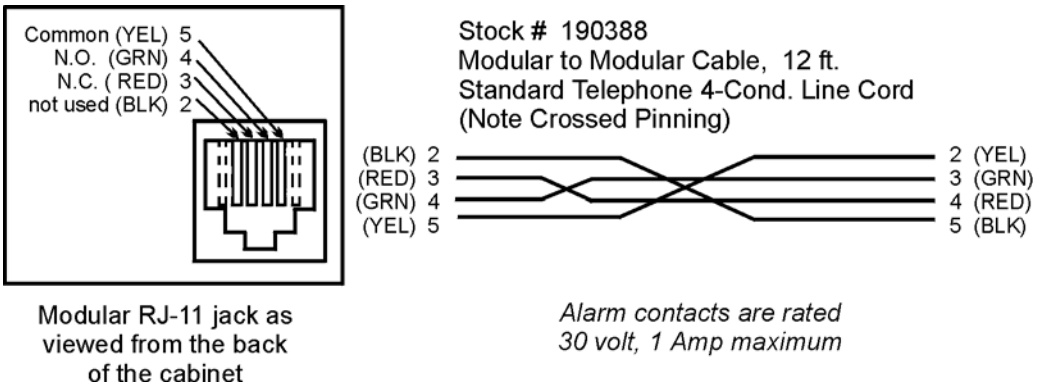

Figure 1-16. Remote Alarm Output to Screw Terminal Connection

RS-232 Interface Connector (cont.)

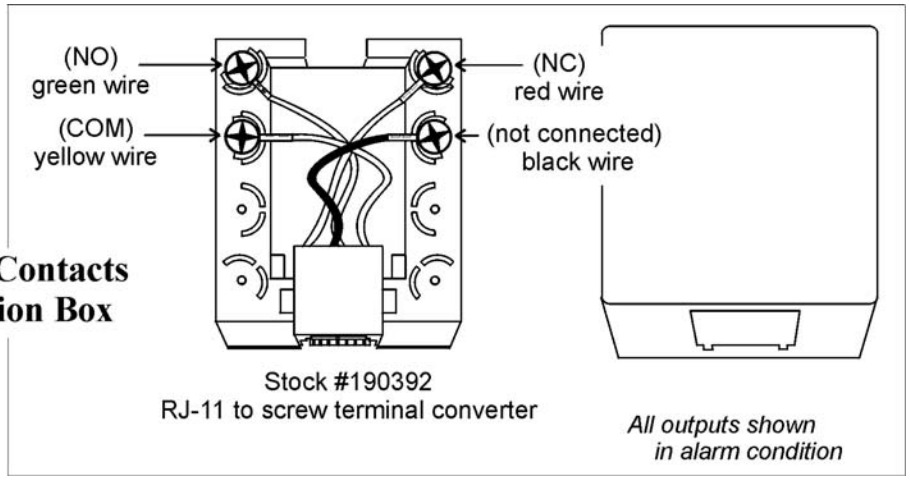

Figure 1-17. Pin Connections

Three wires are used for the RS-232 interface:

1. Transmit data (/TXD) - pin 2 DB-25 connections
2. Receive data (/RXD) - pin 3 DB-25 connections
3. Signal ground (GND) - pin 7 DB-25 connections

The data format is:

Baud . . 1200 (9600 baud with jumper at J2, on the Control Board)
Data bits . . . . . .8 (7 bit ASCII with leading zero)
Start bits 1
Stop bits 1
Parity . . . . . .none

The data transfer sequence is transmitted in the following format. X refers to the numerical time, speed and temperature.

(NUL)XXX:XX(H)(SP)(SP)XXXRPM(SP)(SP)XX.XC(SP)(LF)(CR)(EOT)

NUL . . . . . .Null character (0)
SP . . . . . .Space (32)
LF . . . . . .Line feed (10)
CR . . . . . .Carriage return (13)
EOT . . . . . .End of transmission (4)
H . . . . . .H is for timer count up mode (H) or no H for timer count down mode.

RS-232 Interface Connector (cont.)

Model SHKE435HP and SHKE436HP shakers transmits= time, RPM and temperature information one minute after power is first applied to the unit, then every 60 minutes thereafter unless the shaker receives either a <Ctrl><Q> or a <Ctrl><S>.

The shaker's microprocessor responds to two commands from the remote:

<Ctrl><Q> (XON)

The shaker will immediately transmit time, speed, and temperature data upon receiving a <CTRL><Q> and will reset the 60 minute data transmission interval timer.

<Ctrl><S> (XOFF)

The shaker will stop serial data transmission upon receiving a <Ctrl><S> until a <Ctrl><Q> is received or power is cycled.

Connect the Remote Alarm

IMPORTANT USER INFORMATION

CAUTION! Stored product should be protected by a redundant 24 hour/day monitoring system with alarm capability. An interconnect jack and thermocouple are installed for centralized monitoring, should on-board system fail.

An internal SPDT relay is provided to monitor alarms and is connected by a RJ-11 (telephone style) jack on the rear of the cabinet. The remote alarm provides NO (normally open) and NC (normally closed) output. Figure 1-16 identifies the pin contacts and may be wired to a central remote alarm location or to an independent alarm system. Figure 1-15 identifies the pin contacts. Figure 1-18 shows the location of the Remote Alarm Connector.

A modular to modular cable (Stock No. 190388) and an RJ-11 telephone style terminal converter (Stock No. 190392) or equivalent may be used to convert the remote alarm output to a screw terminal connection. Refer to Figures 1-16 and 1-17.

Lid Security Lock

To protect the contents of the shaker or prevent tampering or unauthorized access, a security lock is located on the right side of the lid (Figure 1-18). Two keys for this lock are in the parts package attached to the outside of this unit when shipped.

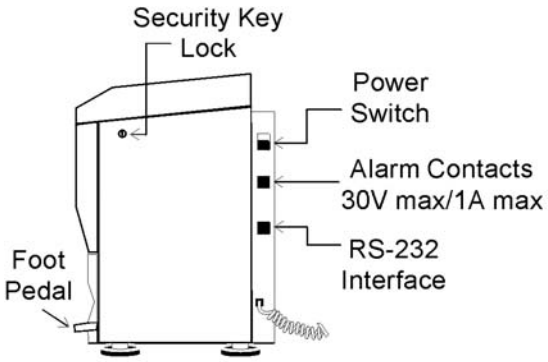

Figure 1-18. Side View

Connect to Electrical Power

Connect the line cord to the power inlet in the back of the unit.

See the serial tag on the side of the unit for electrical specifications or refer to the electrical schematics at the end of this manual.

Caution Connect the orbital shaker to a grounded dedicated circuit. The On/Off switch is the mains disconnect device for the orbital shaker. Position the unit so the switch is easily accessible. ▲

Section 2 Operation

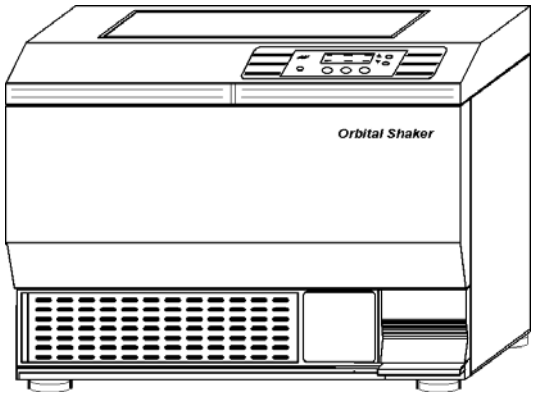

Figure 2-1. Front View

Model SHKE435HP and SHKE436HP shakers are microprocessor-controlled incubated orbital console shakers designed to accommodate a wide variety of flasks, test tubes and other glassware. The control system is easily programmed and stores the user-defined time, temperature and speed settings in battery-supported memory that remain even when the shaker is turned off and unplugged.

The platform speed controller continuously adjusts for line voltage fluctuations and provides smooth transitions with consistent control. The circuitry is designed to slowly bring the platform up to speed and down to a stop to prevent liquid splashing from flasks or test tubes.

An insulated lid with viewing port is counter-balanced for easy opening by hand or foot pedal. A safety interlock requires that the lid be closed for the drive motor, circulating fans and heating elements to operate.

Caution It may take up to one minute to bring the platform up to full speed. Never leave the shaker unattended when starting it.

Caution Make sure all flasks and test tube racks are firmly seated in the clips and check the security of the flask clip and platform attachment screws monthly.

Caution Do not operate the shaker at maximum speed without a load. ▲

Control Panel Operation

The control panel on these units has a liquid crystal display and eight operating buttons which are identified by word and symbol. During programming, the up and down arrows increase and decrease the numerical values of time, platform speed, or temperature. Press and hold either arrow to cause the values to scroll in that direction; hold for more than five seconds to increase the scrolling speed.

When changing the system configuration, the down arrow advances the display to the next screen while the up arrow returns the display to the previous screen. Pressing the Time, RPM or Temperature button selects the parameter above it to be changed, while the up and down arrows increase and decrease the numerical values, respectively, or toggle between two different options. Pressing and holding either arrow will cause the values to scroll in that direction; holding for more than five seconds will increase the scrolling speed.

The START button begins platform operation as defined by the Time and Speed setpoints, while the STOP button halts the platform. Chamber temperature control begins upon power-up as defined by the Temp setpoint.

The alarm indicator and alarm silence button complete the shaker control panel. When in alarm, the unit sounds an audible warning and flashes the three red indicators. Depending upon the error detected, pressing the Silence button turns off the audible alarm. However, the three red indicators continue to flash until the alarm condition is corrected. For most alarms, the audible warning will sound again in about fifteen minutes if the condition persists.

The alarm features are discussed in more detail in the “Shaker Alarms” section of this manual.

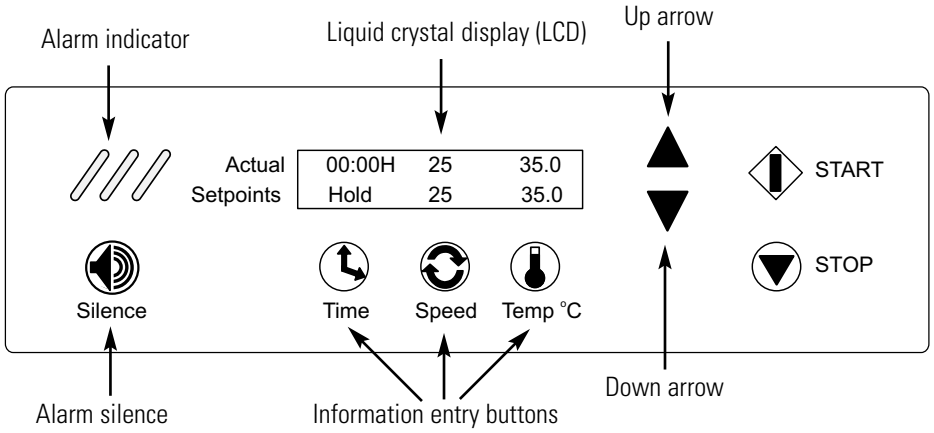

Figure 2-2. Control Panel

Quick Start-Up

Caution If the unit is shipped or stored in very cold conditions, allow the unit to warm to ambient temperatures before using. ▲

Caution This unit should be operated by trained personnel only, as described in this manual. All appropriate personal protective equipment should be worn as required. ▲

Software Version #
435/436 REL X.XX

At power-up, one of the the screens at right will appear on the display for 10 seconds (where X.XX is the current software revision) before it shows the Actual and Setpoint times, speeds and temperatures similar to those illustrated in Figure 2-2. For convenience, this is called the Operating Screen throughout this manual.

Initially, the Actual values along the top of the liquid crystal display will differ from the Setpoint values shown along the bottom. The Actual numbers will change as the unit continues to operate.

Time - With the time set at Hold, the time showing in the upper left portion of the LCD will begin to count upward, showing the total operating hours and minutes. The system will reset to 00:00 whenever the unit is stopped and restarted, using the Stop and START buttons. The system will not reset if the unit is turned off and on using the power switch, or if the shaker door is repeatedly opened and closed.

Speed - The speed shown in the upper center portion of the LCD will indicate the present platform speed. It will display zero RPM at rest and will gradually rise to the setpoint speed after the START button is pressed and the platform begins to rotate.

Temperature - The temperature shown in the upper right portion of the LCD will indicate the ambient temperature inside the shaker and will gradually move toward the setpoint value.

Factory Default Settings

The values shown in Figure 2-2 are factory default settings. Other factory settings are shown in the table below.

Table 2-1. Factory Settings

Function	Default
Audible Alarm	ON
RPM Tracking Limit (fixed)	5 RPM
Temperature Tracking Limit	10°C
Over Temperature Shutdown	83°C - 85°C
All Remote Alarms	ON

Factory Default Settings (continued)

The Console Shaker has been shipped from the factory with the following default settings:

Time: When the shaker is turned on for the first time, the liquid crystal display will show 00:00H. (Hold time) This means the unit is set to record accumulated operating time. Any programming changes in the Time settings are made in increments of five minutes.

Speed: The display shows the unit ready to operate at 25 RPM. Programming changes in speed are made in increments of 1 RPM. However, if the up or down arrows are held for about two seconds, the display will scroll in that direction.

Temperature: The display shows the operating temperature set at 37°C. Changes to the Temperature program settings are made in increments of 0.1°C. However, if the up or down arrows are held for about two seconds, the display will scroll in that direction.

The Console Shaker can be easily programmed to meet the most demanding laboratory requirements using its microprocessor-based technology. The following sections outline the procedures for changing the settings and programming the control system.

Change Temperature, Speed & Time Settings

All programming or setting changes start from the Operating Screen as typically illustrated in Figure 2-2.

The instructions to program the Model SHKE435HP and SHKE436HP shakers are written in a step-by-step format. For convenience, the instructions begin and end at the Operating Screen.

Note At any time during programming or changing configuration settings, if no control panel buttons are pressed for about fifteen seconds, the display automatically returns to the Operating Screen, storing and acting upon any changes made. New settings are also stored and acted upon immediately when an arrow button is pressed. ▲

Change Temperature

1. Press the button beneath the temperature setpoint (Temp °C). The Run temperature value will begin to flash.

2. Press the up or down arrows to set the new Run temperature in 0.1°C increments. Hold either arrow button to scroll. However, if the up or down arrows are held for about two seconds, the display will scroll in that direction.

3. Press the temperature button again to return to the Operating Screen. The temperature can be set over a range of 5.0 to 60.0C. However, Model SHKE435HP and SHKE436HP shakers may not control temperature properly if the temperature is set less than 10.0C above ambient termperature.

Change Speed

1. Press the button beneath the speed setpoint. The speed value will begin to flash.

2. Press the up or down arrows to set the new speed in 1 RPM increments. Hold either arrow button to scroll. However, if the up or down arrows are held for about two seconds, the display will scroll in that direction.

3. Press the speed button again to return to the Operating Screen. The speed can be set over a range of 25 to 550 RPM.

Change Time

Model SHKE435HP and SHKE436HP shakers manage operating time in two ways:

Hold - When time is set to Hold, the value shown in the Actual portion of the display represents total operating time and may be reset at the operator's convenience. The shaker will continue to count upwards even if the console lid has been repeatedly opened and closed, or turned off and on with the power switch. The time will, however, reset to 00:00 when the STOP button is pressed and the unit then restarted by pressing the START button.

Countdown - When the Hold setpoint is changed to Countdown entering a time value in hours and minutes, the platform will operate for that period and automatically stop. The display will show the total time in the Setpoint segment and the operating time remaining in the Actual part of the display, as the microprocessor counts down to zero.

Change from Hold to Countdown

1. Press the button beneath the time setpoint. Hold will begin to flash.

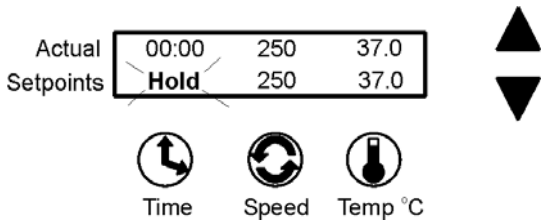

Figure 2-3. Flashing Hold

2. Press either arrow to access the countdown time setpoint. The last preset time setpoint will begin to flash.

3. Press the up or down arrows to set the desired operating time in five minute increments. Hold either arrow button to scroll in that direction. However, if the up or down arrows are held for about two seconds, the display will scroll in that direction.

Change from Hold to Countdown (continued)

4. When the desired elapsed time is set (8 hours, 30 minutes in this example), press the time button to return to the Operating Screen. Pressing the START button will start the platform and begin the countdown sequence. When 00:00 is reached, the platform will automatically stop and the Cycle Complete alarm will sound.

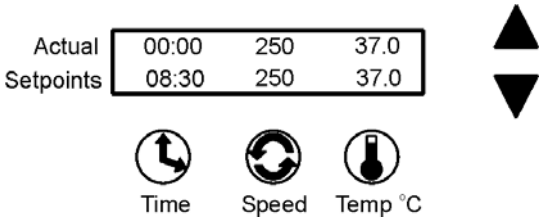

Figure 2-4. Time Set

Shaker Alarms

The MaxQ SHKE435HP/SHKE436HP control system monitors and provides alarms for nine operating parameters.

Table 2-2. Alarm Parameters

Parameter	Alarm Message	Remote Alarm
Overtemp Setpoint Status	Overtemp Shutdown	No
Cycle Status	Cycle Complete	Yes
Loss of Input Power	Power Failure	Yes
RPM versus Setpoint	RPM is High, RPM is Low	Yes
Drive Belt Integrity	Check Belt	Yes
Temp Sensor Integrity	Main Temp Sensor, Over Temp Sensor	Yes
Temp Control Status	Temperature is High, Temperature is Low	Yes
Platform Movement Status	Platform Stalled	No
Motor Drive Board Input Power Integrity	Check Fuse	No

Both audible and visual alarm warnings for these nine parameters are provided by the shaker. Visual flashing of the three diagonal indicator lights on the control panel, a progression of alarm messages on the display, and an audible tone alerts the operator that an alarm condition has occurred, or currently exists.

Shaker Alarms (continued)

For convenience, the audible tone is muted by pressing the Silence button, but rings back in about 15 minutes, for most alarms, if the alarm condition is still present. However, the alarm indicator lights and alarm messages continue until the alarm condition is corrected by the operator. After the root cause of the fault has been corrected, pressing the Silence button will clear the alarm message from the display and stop the alarm indicator lights from flashing. The audible tone will ring back in about 30 minutes for the Check Belt and Check Fuse alarms if the alarm condition is still present. These alarm messages clear from the display when the unit is turned back on after correcting the alarm condition. The audible alarm feature may be turned off to suit operator or laboratory needs.

As discussed in the Configuration section of this manual, the audible alarm feature may be turned off to suit the operator and laboratory needs. Refer also to the Alarm Message/Corrective Action chart in the Service section of this manual.

Overtemp Shutdown

Overtemp Shutdown alerts the operator that the overtemp setpoint has been exceeded by a few tenths of a degree.

Actual	08:41	250	37.0
Setpoints	Overtemp Shutdown		

The Overtemp Shutdown message displays and the heaters are turned off, but the platform and the blowers continue to operate.

In the alarm state, the audible alarm is muted by pressing the Silence button, but rings back in about 15 minutes, if the alarm condition is still present. However, the message and indicator lights persist until the fault is corrected. Afterward, the remaining relevant alarm components are cleared by pressing the Silence button.

Cycle Complete

Cycle Complete alerts the operator that the end of the count-down running time has been reached.

Actual	00:00	00	37.0
Setpoints	Cycle Complete		

The Cycle Complete message shown displays and the platform stops.

Press the Silence button to clear the alarm message from the display screen and mutes the audible alarm.

Power Failure

Actual 00:00 00 37.0
Setpoints Power Failure

Power Failure alerts the operator that electrical power to the unit was interrupted, under specific operating conditions.

While the system returns to normal operation when power is restored, the alarm message remains and the audible tone continues to sound to alert the operator. Both the display message and the audible tone are cleared by pressing the Silence button.

Note The alarm will not occur if the power failure is less than 15 seconds in duration, while the unit is shaking. ▲

If power is interrupted for more than 1½ hours while the unit is turned on but not shaking, a Power Failure alarm will occur. The purpose of the alarm in this case is to alert the user that an extended duration power failure occurred during the Hold interval after a timed shaking operation, or during a period of incubation only. This alarm will also occur any time the unitis turned on after being turned off for more than 1½ hours (such as when the unit is shipped from the factory, or when it is returned to use after a period of storage).

RPM Tracking

Actual 08:41 255 37.0
Setpoints RPM is High

Actual 08:41 245 37.0
Setpoints RPM is Low

RPM Tracking alerts the operator by either alarm message shown below that the platform speed has varied ±5 RPM.

In the alarm state, the audible alarm is muted by pressing the Silence button, but rings back in about 15 minutes, if the alarm condition is still present. However, the message and indicator lights persist until the fault is corrected. Afterward, the remaining relevant alarm components are cleared by pressing the Silence button.

Check Belt

Actual 08:41 00 37.0
Setpoints Check Belt

Check Belt alerts the operator that the drive belt may have broken, is slipping because it needs tightened, or something is slowing or preventing platform movement.

In the alarm state, the audible alarm is muted by pressing the Silence button, but rings back in about 30 minutes, if the alarm condition is still present. However, the message and indicator lights persist until the fault is corrected. Afterward, the remaining relevant alarm components are cleared by pressing the Silence button.

Sensor Fault

Sensor Fault alerts the operator that either of the shaker's two temperature sensors have failed, by an appropriate alarm message as shown.

Actual	08:41	250	37.0
Setpoints	Main Temp Sensor		

Actual	08:41	250	37.0
Setpoints	Over Temp Sensor		

In the alarm state, the audible alarm is muted by pressing the Silence button, but rings back in about 15 minutes, if the alarm condition is still present. However, the message and indicator lights persist until the fault is corrected. Afterward, the remaining relevant alarm components are cleared by pressing the Silence button.

Temperature High or Low

Temperature High or Temperature Low alerts the operator that the operating temperature of the shaker has risen above or fallen below the programmed temperature tracking limit control point, by an appropriate alarm message as shown.

Actual	08:41	250	47.0
Setpoints	Temperature is High		

Actual	08:41	250	27.0
Setpoints	Temperature is Low		

In the alarm state, the audible alarm is muted by pressing the Silence button, but rings back in about 15 minutes, if the alarm condition is still present. However, the message and indicator lights persist until the fault is corrected. Afterward, the remaining relevant alarm components are cleared by pressing the Silence button.

Platform Stalled

Platform Stalled alerts the operator that free platform movement is inhibited. The motor will automatically shut off and attempt to restart after approximately 15 seconds. In the alarm state, the audible alarm is muted by pressing the Silence button, but rings back in about 15 minutes, if the alarm condition is still present. However, the message and indicator lights persist until the fault is corrected. The motor will continue to cycle on and off until the obstruction is removed, or the unit is turned off. On motor restart, the audible alarm and indicator lights are automatically cleared, but the alarm message will remain until pressing the Silence button

Actual	08:41	0	23.7
Setpoints	Platform Stalled		

Caution Turn off unit power when removing any platform obstruction to prevent possible injury. ▲

Check Fuse

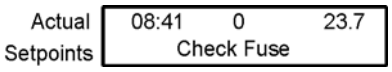

Check Fuse alerts the operator that there is no communication with the motor drive circuit board (historically the primary drive motor fuse has blown). In the alarm state, the audible alarm is muted by pressing the Silence button, but rings back in about 30 minutes, if the alarm condition is still present. However, the message and indicator lights persist until the fault is corrected. When the unit is turned on after fuse replacement, all alarm indicators are automatically cleared.

Warning Fuse replacement must be performed by qualified service personnel. See Service section. ▲

Change Configuration

To access the system Configuration menu, press the down arrow, the up arrow and the Silence button in that sequence.

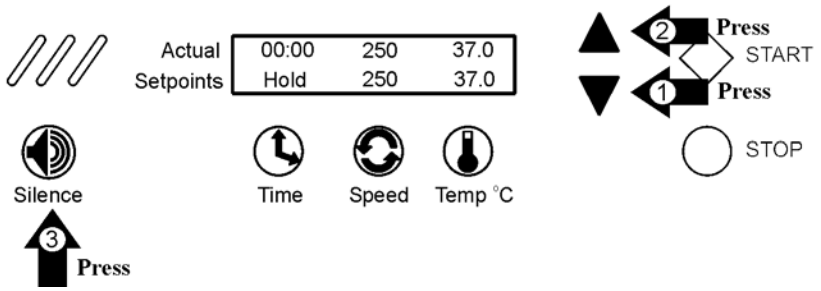

This screen will appear on the display.

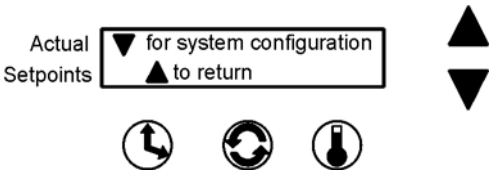

Pressing the down arrow continues with system configuration.

Pressing the up arrow returns to the Operating Screen.

During the following configuration procedures, menu options are given to either modify a setting as it appears in sequence, or scroll past to the next item. If no selection is made by pressing a button or arrow, the display will revert to the Operating Screen in about 15 seconds. The complete configuration menu is shown in the chart at the end of this section.

Note In these procedures, values and settings for time, temperature, speeds, alarms, and so forth are shown on the display screens. These numbers are for example only and may not be the values encountered when programming your unit. ▲

Turn the Audible Alarm On and Off

Open the Configuration menu by pressing the down arrow, the up arrow, and the Silence button, then the down arrow again, in the sequence shown at the right.

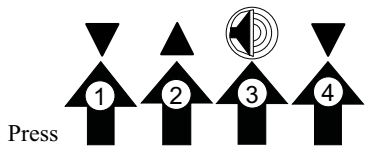

The screen shown at right will appear on the display:

Then press the Time button beneath Audible. The screen at right appears.

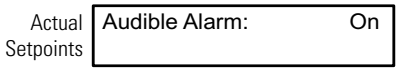

Press the up or down arrow to turn the audible alarm function on or off. Press any of the three buttons (Time, Speed, or Temp) to save the new setpoint value and return the display to the previous screen. Press nothing for about 15 seconds to save the new setpoint value and return the display to the Operating Screen.

When the audible alarm is disabled, a warning message is placed in the Setpoint portion of the Operating Screen display as illustrated at the right.

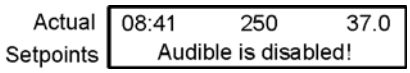

Set Alarm Limits

Two temperature alarms are programmed into the Model SHKE435HP/ SHKE436HP orbital shaker; Overtemperature and Tracking limits.

The Overtemperature alarm activates whenever the operating temperature goes above the Overtemp setpoint by a few tenths of °C. This adjustable limit is set at the factory at approximately 64°C. To change this value, open the Configuration menu by pressing the down arrow, up arrow, and the Silence button, then the down arrow once again, in the sequence shown at the right.

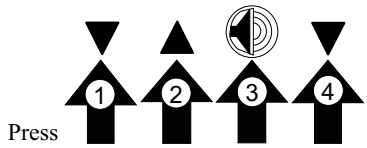

The screen shown at the right will appear on the display.

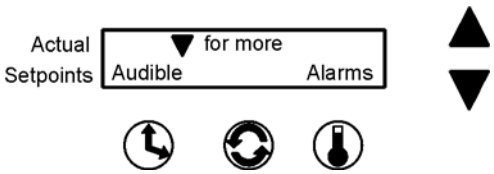

Then press the temperature button beneath Alarms.

To change the overtemperature alarm setting, press the Time button beneath Overtemp.

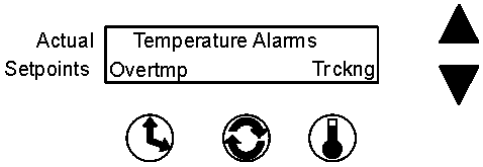

Set Alarm Limits (continued)

The following screen appears and the present over-temperature alarm setting flashes.

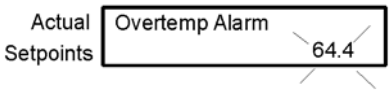

Change the temperature setting by pressing the up or down arrow. When set, press any of the three buttons (Time, Speed, Temp) to save the new setpoint and return to the previous screen or press nothing for about 15 seconds to save the new setpoint and return the display to the Operating Screen.

Note The Overtemp Alarm setpoint values are calculated from the hardware and will not include every numerical value between the upper and lower limits. ▲

When the overtemperature setpoint is exceeded by a few tenths of a degree, the control system will shut the shaker down by turning off the heaters.

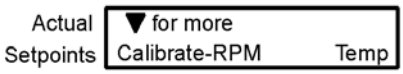

The Overtemp Shutdown warning shown above will be displayed, the indicator lights will flash and the audible tone (if not turned off) will sound.

In the alarm state, the audible alarm is muted by pressing the Silence button, but rings back in about 15 minutes, if the alarm condition is still present. However, the message and indicator lights persist until the fault is corrected. Afterward, the remaining relevant alarm components are cleared by pressing the Silence button.

Set the Temperature Alarm Tracking Limit

The Temperature Tracking alarm activates whenever the operating temperature goes above or below the setpoint temperature by a user selectable value in the range of 1°C to 20°C. The limit is set at the factory as 10°C above and below the temperature setpoint.

Note The above and below limits will always be the same value. ▲

To change this limit, open the Configuration menu by pressing the down arrow, the up arrow, and the Silence button, then the down arrow again, in the sequence shown at the right.

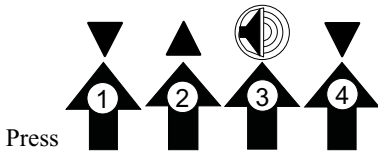

The screen shown below appears on the display:

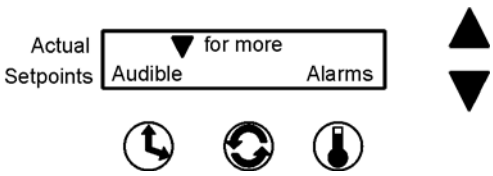

Then press the Temperature button beneath Alarms.

Set Temperature Alarm Tracking Limit (continued)

From the screen below, press the Temperature button beneath Tracking (Trckng).

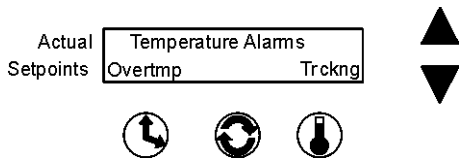

The following screen will appear and the present Temperature Tracking alarm limit setting will flash.

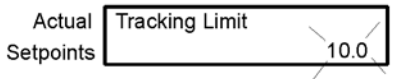

Change the Temperature Tracking limit by pressing the up or down arrow. When set, press any of the three buttons (Time, Speed, Temp) to save the new setpoint and return to the previous screen or press nothing for about 15 seconds to save the new setpoint and return the display to the Operating Screen.

When the chamber temperature rises above or falls below the temperature tracking limit, the appropriate message is displayed (at right), the indicator lights flash and the audible tone sounds (if not turned off).

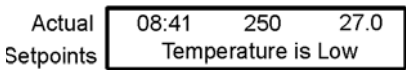

In the alarm state, the audible alarm is muted by pressing the Silence button, but rings back in about 15 minutes, if the alarm condition is still present. However, the message and indicator lights persist until the fault is corrected. Afterward, the remaining relevant alarm components are cleared by pressing the Silence button.

Remote Alarm System

Most of the alarm states described previously (see Table 2-2) can alert a remote alarm monitoring system through an internal SPDT relay connected to an RJ-11 jack on the rear of the shaker cabinet. Refer also to 'Connect the Remote Alarm' in Section 1. For the convenience of the laboratory, these remote alarms can be individually turned on or off. Any of the remote alarms set to On will activate the internal relay.

Note The remote Overtemp Shutdown, Platform Stalled and Check Fuse alarms cannot be deactivated. ▲

To set the remote alarms to On or Off, open the Configuration menu by pressing the down arrow, up arrow, and the Silence button, and then the down arrow three times, in the sequence shown at right. The screen shown at right will appear on the display.

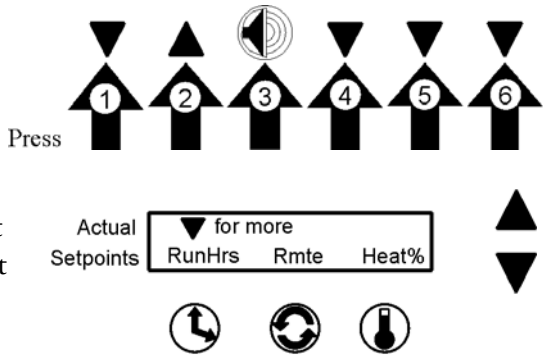

Press the Speed button beneath Remote (Rmte). The alarms will be shown in the following sequence.

Cycle Complete

Toggle the Cycle Complete alarm with either the up (On) arrow or the down (Off) arrow. Pressing Temp button beneath Next advances the display to the next alarm, saving the shown Cycle Complete setting to memory.

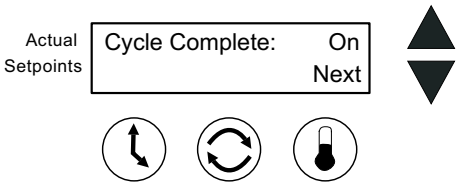

If no buttons are pressed, the display automatically returns to the Operating Screen after about 15 seconds, saving the selection to memory.

Power Failure

Toggle the Power Failure alarm with either the up (On) arrow or the down (Off) arrow. Pressing the Temp button beneath Next advances the display to the next alarm, saving the Power Failure setting to memory.

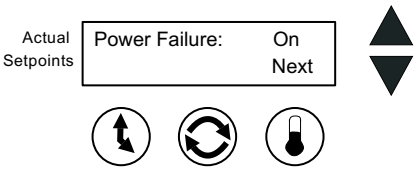

If no buttons are pressed, the display automatically returns to the Operating Screen after about fifteen seconds, saving the selection to memory.

RPM Tracking

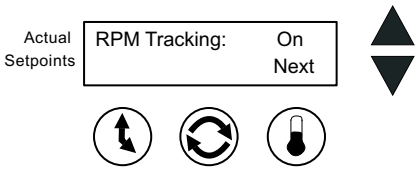

Toggle the RPM Tracking alarm with either the up (On) arrow or the down (Off) arrow. Pressing the Temp button beneath Next advances the display to the next alarm, saving the RPM Tracking setting to memory.

If no buttons are pressed, the display automatically returns to the Operating Screen after about 15 seconds, saving the selection to memory.

Check Belt

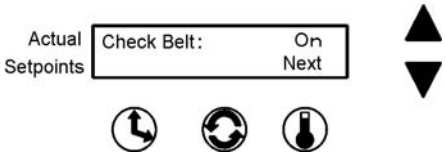

Toggle the Check Belt alarm with either the up (on) arrow or the down (off) arrow. Pressing the Temp button beneath Next advances the display to the next alarm, saving the Check Belt setting to memory.

If no buttons are pressed, the display automatically returns to the Operating Screen after about 15 seconds, saving the selection to memory.

Sensor Fault

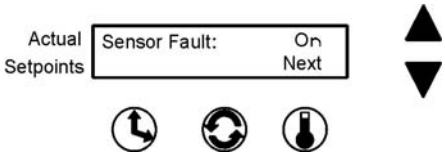

Toggle the Sensor Fault alarm with either the up (On) arrow or the down (Off) arrow. Pressing the Temp button beneath Next advances the display to the next alarm, saving the on/off setting to memory.

If no buttons are pressed, the display automatically returns to the Operating Screen after about 15 seconds, saving the selection to memory.

Temperature High or Low

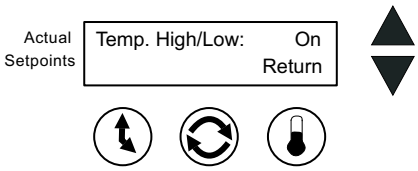

Toggle the Temperature High or Low alarm with either the up (On) arrow or the down (Off) arrow. Pressing the Temp button beneath Return returns the display to the previous screen, saving the on/off setting to memory.

If no buttons are pressed, the display automatically returns to the Operating Screen after about 15 seconds, saving the selection to memory.

View Total Operating Hours

Whether the unit has been operated in Hold or Countdown modes, and/or has been turned off and unplugged many times, the microprocessor control system maintains a running total platform operating hours.

To view this information, open the Configuration menu by pressing the down arrow, up arrow and Silence button, then the down arrow three times, in the sequence shown at right.

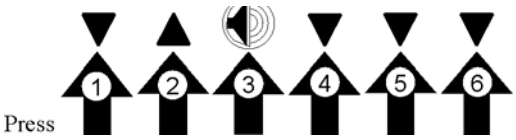

The screen shown at right will appear on the display:

Pressing the Time button beneath RunHrs shows total accumulated run hours as displayed in the illustration at the right. When finished, press any of the three buttons (Time, Speed, or Temp) to save the new setpoint value and return to the previous screen, or press nothing for about 15 seconds to save the new setpoint value and return to the Operating Screen.

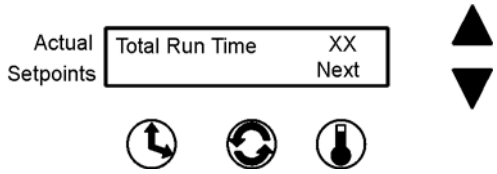

Heat %

Heat percent is intended for factory use only, but can be helpful in troubleshooting the heat control system.

To view this information, open the Configuration menu by pressing the down arrow, up arrow and Silence button then the down arrow three times, in the sequence shown at right. The screen shown at right will appear on the display:

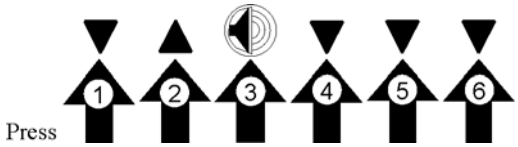

Press the Temp button beneath Heat %.

Main Heat % is the percentage of time that the chamber heater is turned on during a five second period.

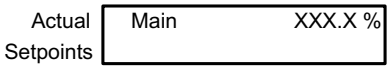

<u>Example:</u> If the heater is being cycled on for two seconds and off for three seconds, the Heat % value is 40 percent.

When finished, press any of the three buttons (Time, Speed, or Temp) to save the new setpoint value and return to the previous screen, or press nothing for about 15 seconds to save the new setpoint value and return to the Operating Screen.

Software Version

Software Version is for factory use only and will be important if troubleshooting the microprocessor programming is ever necessary.

To view this information, open the Configuration menu by pressing the down arrow, up arrow and Silence button, then the down arrow four times, in the sequence shown at right. The screen below will appear on the display:

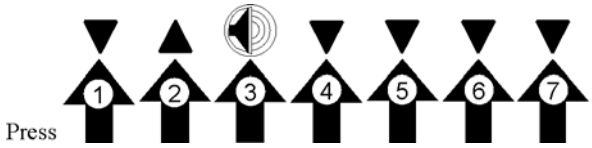

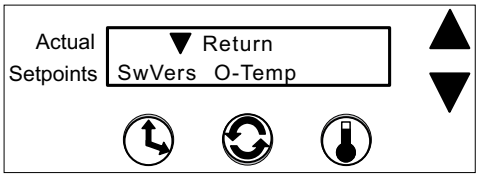

Press the Time button beneath SwVers and the screen at above right will appear, showing the Model SHKE435HP/SHKE436HP software version in the control system memory.

To return to the previous screen, press the Time button. To return to the Operating Screen, wait about 15 seconds.

Overtemp Sensor Readings

Overtemp Sensor Readings is for factory use only and will be important if troubleshooting the microprocessor programming is ever necessary.

To access this screen, press the down arrow, up arrow, Silence button, then the down arrow button four more times.

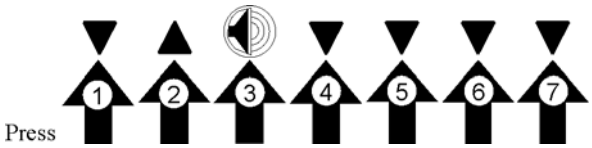

The screen shown at the right will appear on the display.

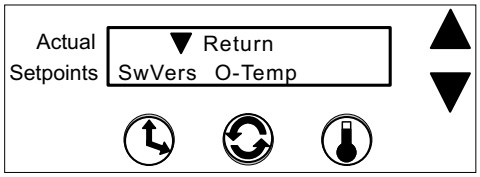

Press the Speed button beneath O-Temp and the screen at the right will appear, showing the temperatures being read by the Overtemperature sensor.

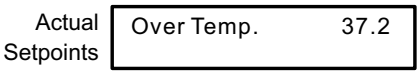

When finished, press any of the three buttons (Time, Speed, or Temp) to save the new setpoint value and return to the previous screen, or press nothing for about 15 seconds to save the new setpoint value and return to the Operating Screen.

Selecting Hold or Countdown Time
Setting Operating Speed
Setting Operating Temperature

Orbital Shaker Menu Map

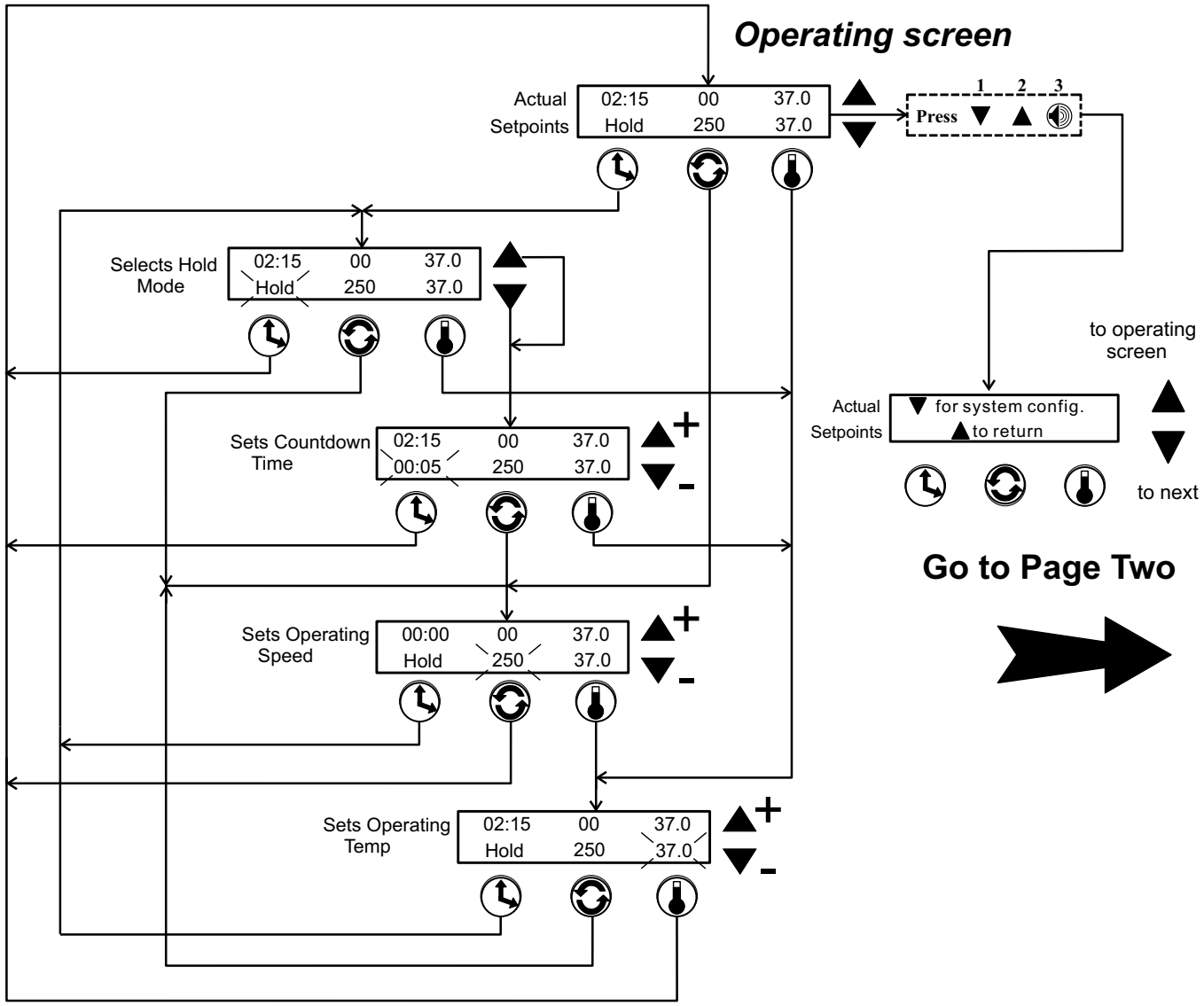

Note: Numerical values and alarm settings shown here are for reference only and may not match any specific shaker

Orbital Shaker Menu Map

Turning the Audible Alarm On and Off

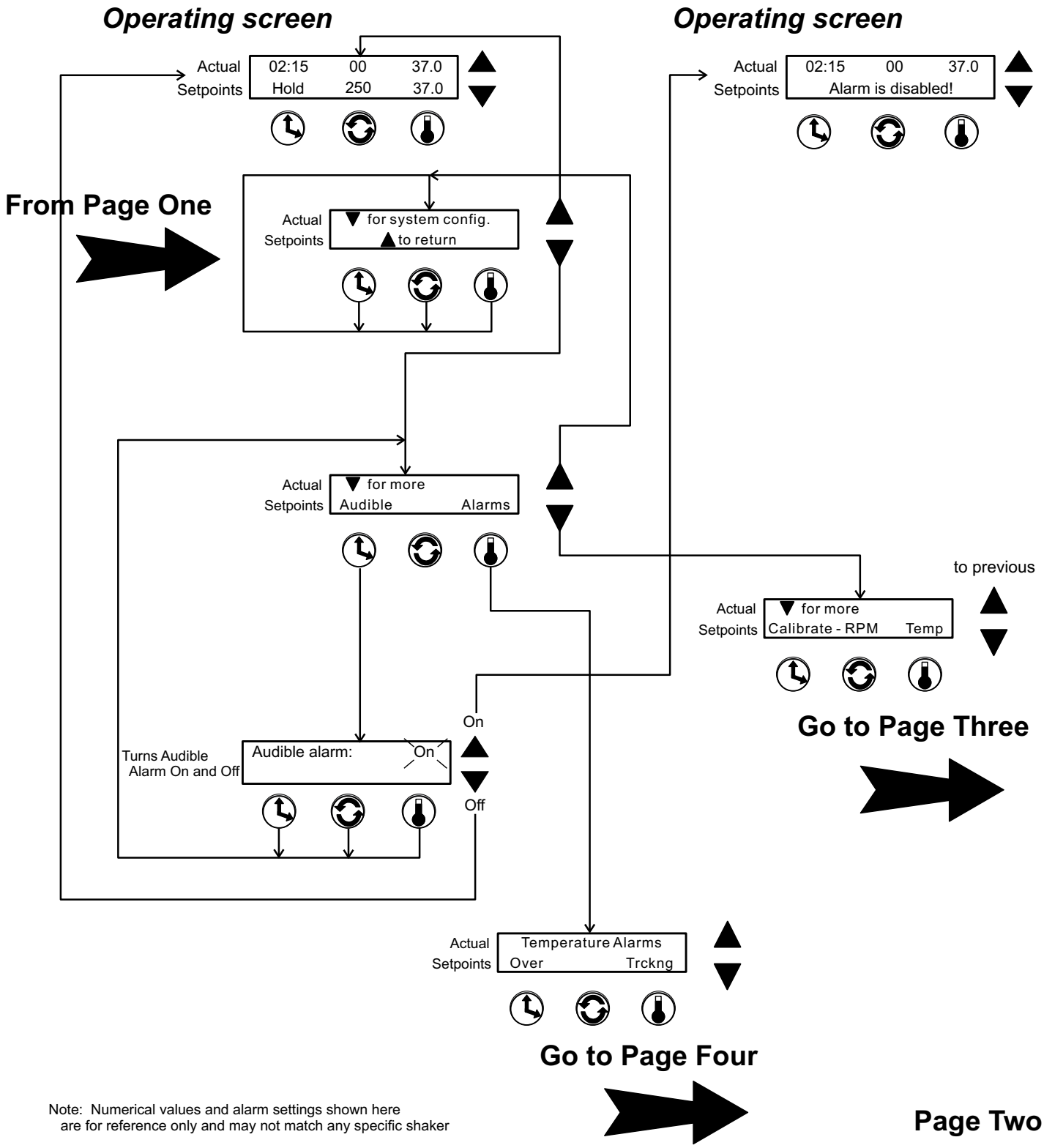

Note: Numerical values and alarm settings shown here are for reference only and may not match any specific shaker

Orbital Shaker Menu Map

Calibrating Speed
Calibrating Temperature
Viewing Total Unit's Running Time
Viewing Percent Heat

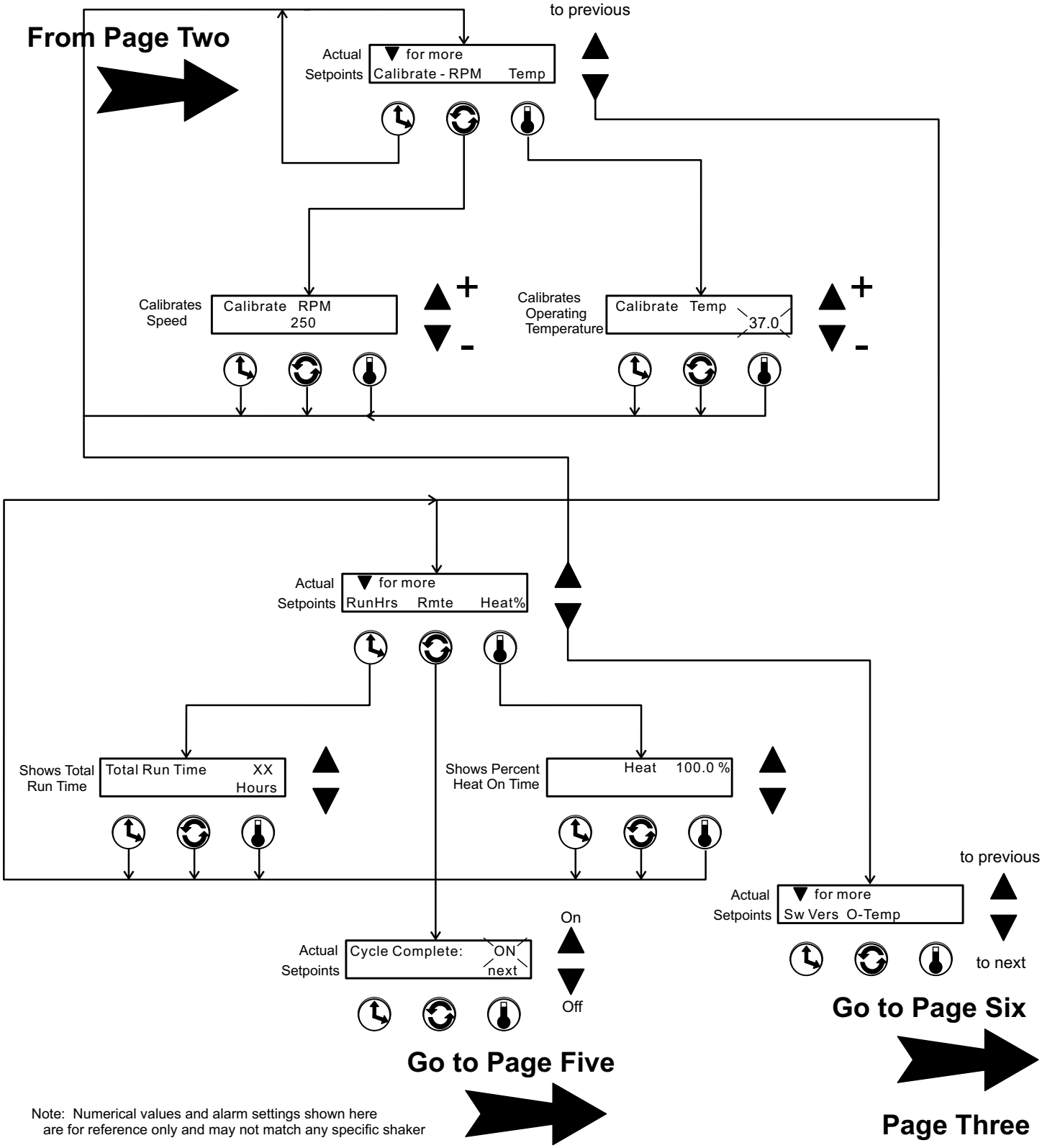

Note: Numerical values and alarm settings shown here are for reference only and may not match any specific shaker

Orbital Shaker Menu Map

Setting Overtemperature Alarm Value
Setting Temperature Tracking Limit Value

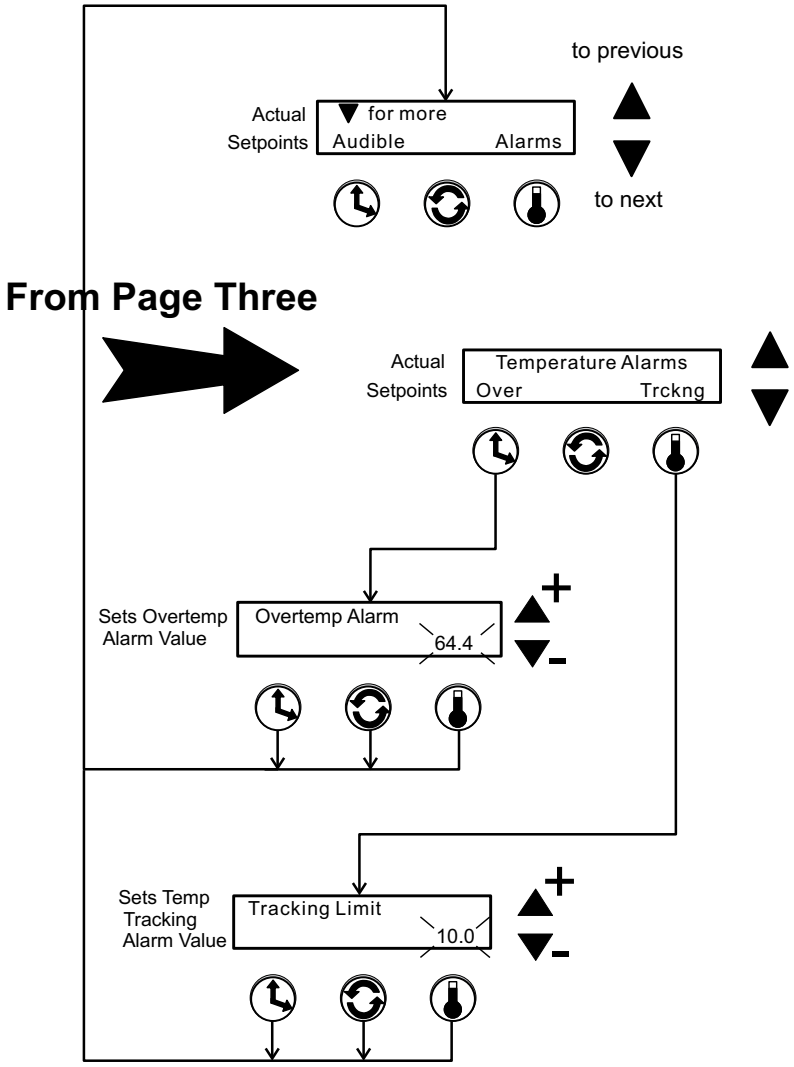

Note: Numerical values and alarm settings shown here are for reference only and may not match any specific shaker

Orbital Shaker Menu Map

Turning the Individual Remote Alarms On and Off

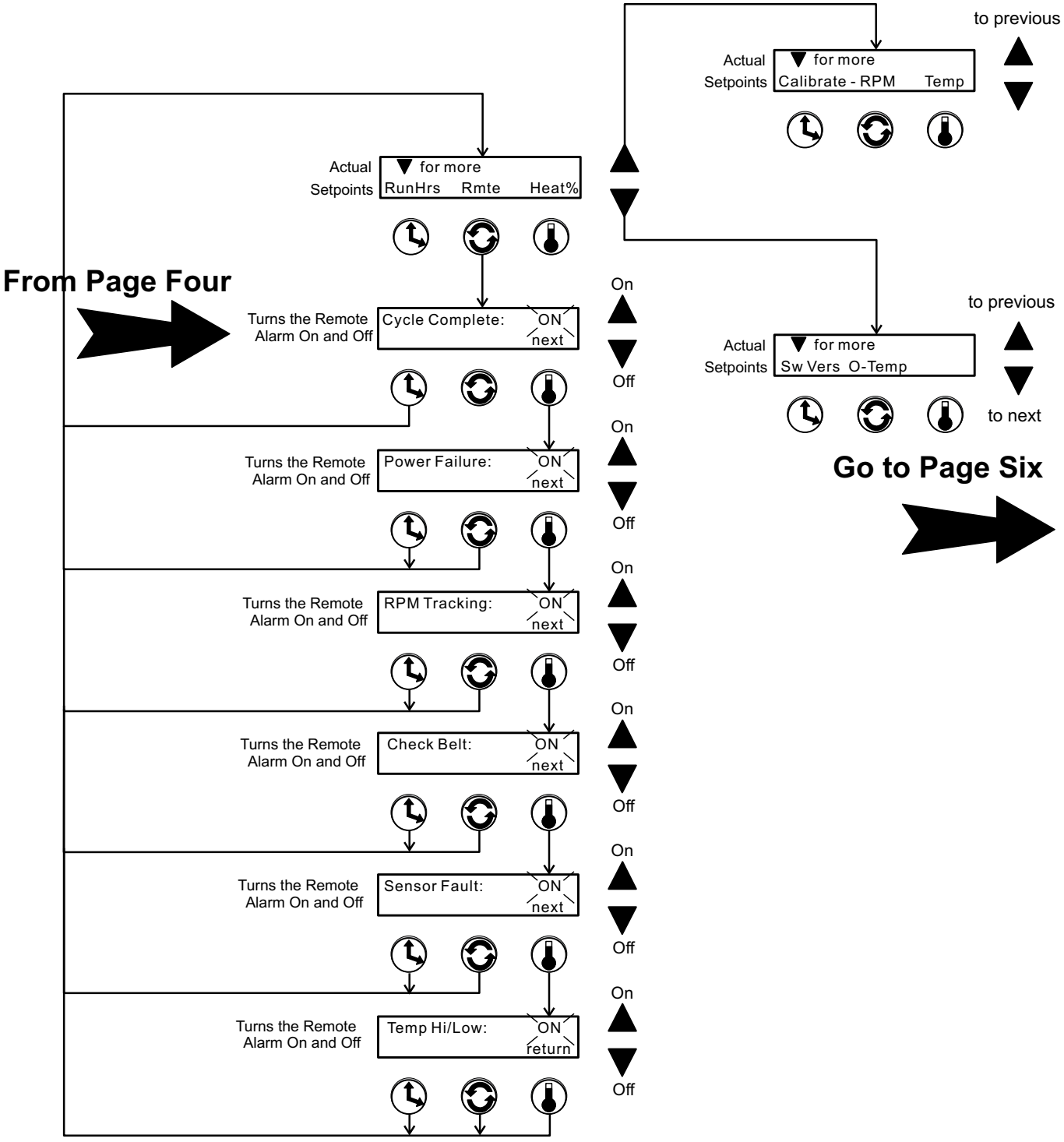

Note: Numerical values and alarm settings shown here are for reference only and may not match any specific shaker

Orbital Shaker Menu Map

Viewing Software Version
Viewing Overtemperature Sensor Reading

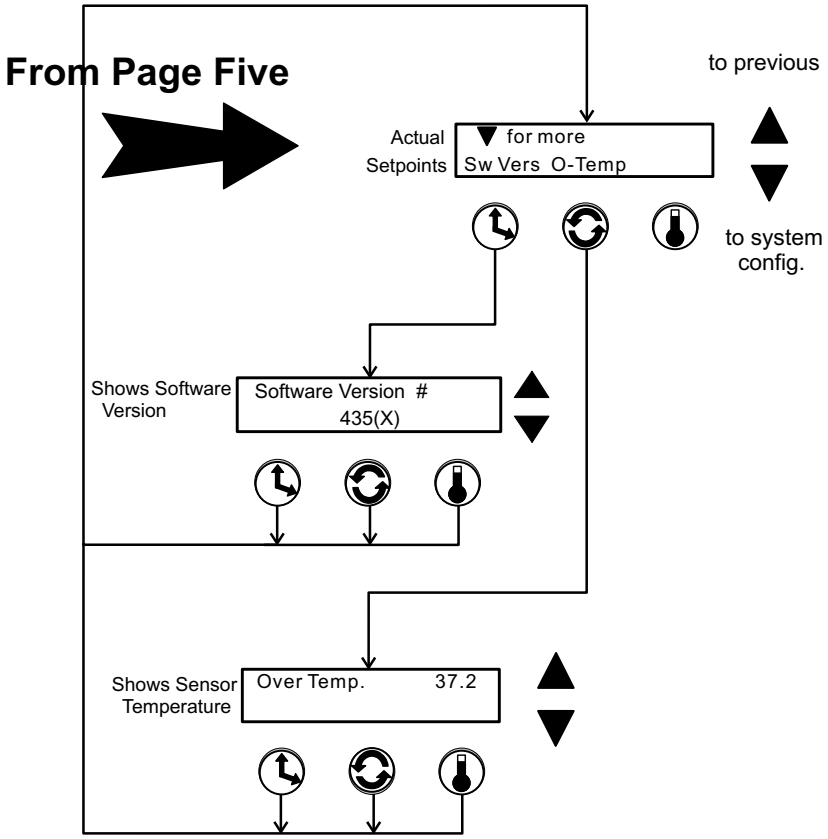

Note: Numerical values and alarm settings shown here are for reference only and may not match any specific shaker

Section 3 Maintenance

The Model SHKE435HP and SHKE436HP shakers use a brushless DC motor and oversized, permanently-lubricated bearings, requiring no maintenance.

Platform and Cabinet Cleaning

The anodized brushed aluminum platform and powder-coated steel cabinet surfaces can be cleaned with common laboratory materials. However, liquids should not be allowed to enter the shaker cabinet from under the platform. All spills should be cleaned up immediately. If necessary, remove the platform. Follow 'Installing the Platform' procedure in Section 1 when re-installing the platform.

Control Panel

The control panel has sealed push buttons and a liquid crystal display. It may be cleaned with a mild detergent and dried with a soft cloth.

Cleaning or Replacing Air Filter

The air filter is located behind the grille on the front of the cabinet. The grille is held in place by six press-in type retainers and is easily removed by grasping it by the edges and pulling it off.

The air filter is held in place by four retaining springs (Figure 3-1) and is easily removed. It may be washed in water with a mild detergent and dried between two lint-free towels.

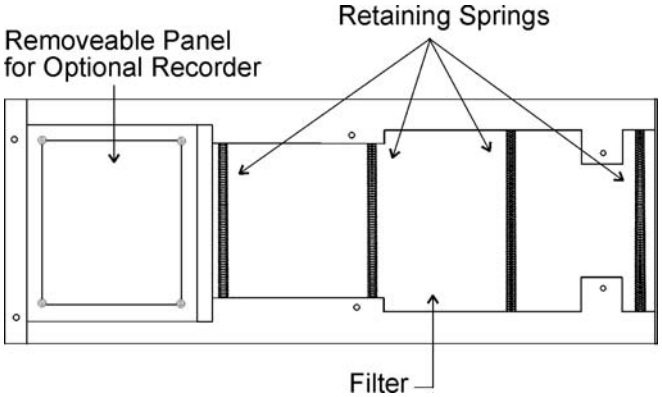

Figure 3-1. Air Filter

PREVENTIVE MAINTENANCE

Shakers

Your equipment has been thoroughly tested and calibrated before shipment. Regular preventive maintenance is important to keep your unit functioning properly. The operator should perform routine cleaning and maintenance on a regular basis. For maximum performance and efficiency, it is recommended the unit be checked and calibrated periodically by a qualified service technician.

The following is a condensed list of preventive maintenance requirements. See the specified section of the operating manual for further details.

We have qualified service technicians, using NIST traceable instruments, available in many areas. For more information on Preventive Maintenance or Extended Warranties, please contact us at the number below.

Cleaning and calibration adjustment intervals are dependent upon use, environmental conditions and accuracy required.

Tips for all shakers:

- Use only our standard flat-head screws for flask clips.
- Use only our standard round-head screws for test tube racks, holders and utility trays.

401 Millcreek Road, Box 649 • Marietta, Ohio 45750 USA • 740-373-4763
USA and Canada 888-213-1790 • Telefax: 740-373-4189 • http://www.service.led.marietta@thermofisher.com

Preventive Maintenance for SHKE435HP Series Shakers

Refer to Manual Section	Action	Daily	Monthly	Yearly
--	Clean the unit with mild detergent and wipe dry as needed		✓	
--	Clean the window with a mild detergent and wipe dry		✓	
--	Check under the platform for broken glass or other debris.		✓	
4	Inspect air filter. Clean as needed		✓	
3	* Check and document calibration of temperature, alarms, speed and time, as applicable			✓
--	* Verify operation of circulation fan motor			✓
5	Change the HEPA filter, as needed			✓

** Qualified service technicians only*

Section 4 Service

Caution The procedures outlined in this section must be performed by persons experienced in servicing and maintaining laboratory equipment. Lockout and tagout electrical power connections whenever removing cabinet panels or working on electrical or motor control components. To avoid damage to solid state electrical components, proper grounding techniques must be observed whenever working on this shaker. ▲

With the exception of the chamber HEPA filter, the Model SHKE435HP and SHKE436HP Orbital Shakers contain no user-serviceable components.

Alarms and Alarm Conditions

If the microprocessor control system senses a fault, malfunction or abnormal operating condition, alarm messages appear on the display. These messages will be helpful should service or repair assistance be necessary. Refer to the table below and the alarm matrix at the end of this section.

Table 4-1. Alarms

Alarm Message	Fault Condition
Overtemp Shutdown	System shutdown due to overtemperature condition
Main Temp Sensor	Temperature sensor has failed
Over Temp Sensor	Temperature sensor has failed
Temperature is High	Temperature tracking has sensed higher temperature than setting
Temperature is Low	Temperature tracking has sensed lower temperature than setting
RPM is High	RPM tracking has sensed shaker speed higher than setting
RPM is Low	RPM tracking has sensed shaker speed lower than setting
Power Failure	Power has failed during shaker operation or shaker power is off for more than 1.5 hours
Cycle Complete	Countdown to zero time has been reached. Unit stops.
Check Belt	Motor V-belt has broken or slipped
Audible is Disabled!	Continuously notifies operator that audible alarm has been disabled
Platform Stalled	Free movement of the platform has been obstructed
Check Fuse	Power loss to motor drive circuit board, most likely the primary drive motor fuse has blown

Change HEPA Filter

The HEPA filter is located on the left side of the chamber, and is accessed by pulling up the four black press-in fasteners and sliding the cover off. Refer to Figure 4-1.

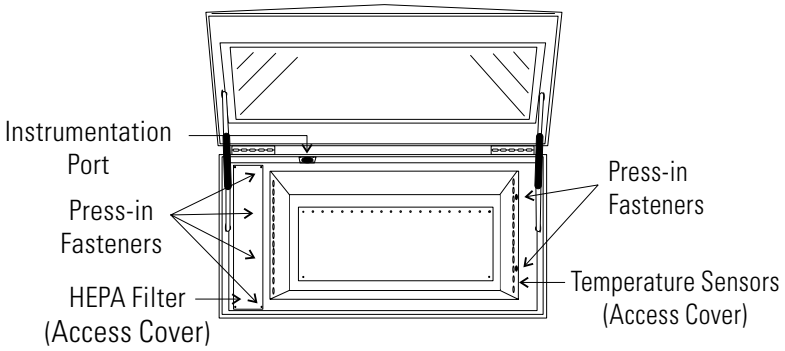

Figure 4-1. HEPA Filter and Temperature Sensors Locations

If the Shaker Will Not Operate

If the shaker platform won't operate with the unit plugged in and the power switch turned on, the following conditions may be present:

- The lid is open. Lower the lid to its fully closed position.
- Time countdown has been reached. Reset the time, or change to continuous operation (Hold).

Spare Fuses

Three spare fuses are provided with this shaker and are taped to the underside of the control panel plastic frame. The plastic frame is attached to the cabinet by Velcro strips. Grasp the frame by the corners and pull to remove. There are also small indents located along the edges of the panel to accommodate a flat screwdriver blade. Figure 4-2 illustrates the underside of the frame.

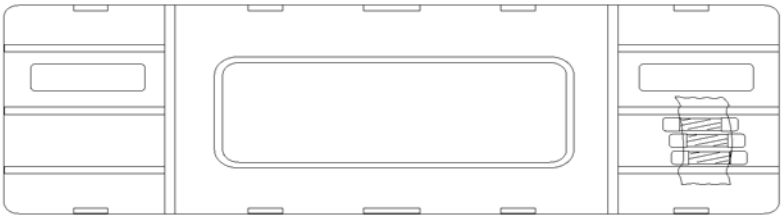

Figure 4-2. Spare Fuse Location

Spare Fuses (continued)

Three fuse holders are located on the left side of the relay tray located in the lower part of the console cabinet. Figure 4-3 shows the location of the fuses. Refer to Table 4-2 for a list of their electrical ratings, part numbers, and applications.

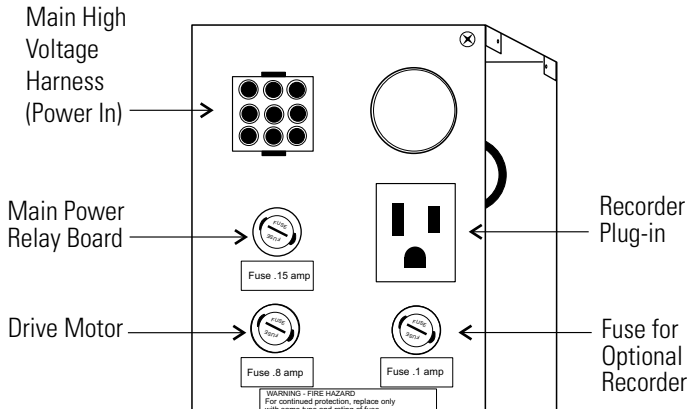

Figure 4-3. Fuse Holders and Connector Locations (Model SHKE436HP shown)

Access to the relay tray is made by removing the grille from the front of the cabinet. It is held in place by six press-in type retainers and is easily removed by grasping the edges of the grille and pulling it off.

To remove the panel beneath the grille, remove six Phillips screws; three on the bottom of the panel and three on the top. The two Phillips screws on the left side of the foot pedal will need to be loosened to allow the panel to slide outward.

Fuses, SHKE435HP		
Rating	**Application**	**Part Number**
0.25 amp	Main Power Relay Board	230144
1.6 amp	Drive Motor	230145
0.1 amp	Recorder (opt.)	30107

Fuses, SHKE436HP		
Rating	**Application**	**Part Number**
0.15 amp	Main Power Relay Board	230142
0.8 amp	Drive Motor	230141
0.1 amp	Optional Recorder	230107

Caution Do not substitute! Replace these fuses with fuses of identical electrical ratings only. ▲

Circuit Boards

Warning Only qualified service personnel should perform this procedure. ▲

Four circuit boards control the Orbital Shaker. Three boards are located in the relay tray compartment, the fourth is behind the LCD display. Figure 4-4 identifies the circuit boards and other major components in the relay tray. Refer also to the relay tray wiring diagrams in Section 7.

To access the panel, unplug the shaker and move it to a sturdy location that will allow the back of the cabinet to swing down and lie flat. Remove the screws indicated by the arrows in Figure 4-2 and lower the back panel.

Components in the electronics panel are identified in Figure 4-4. Refer to the parts list and the electrical schematics in the back of this manual for part numbers.

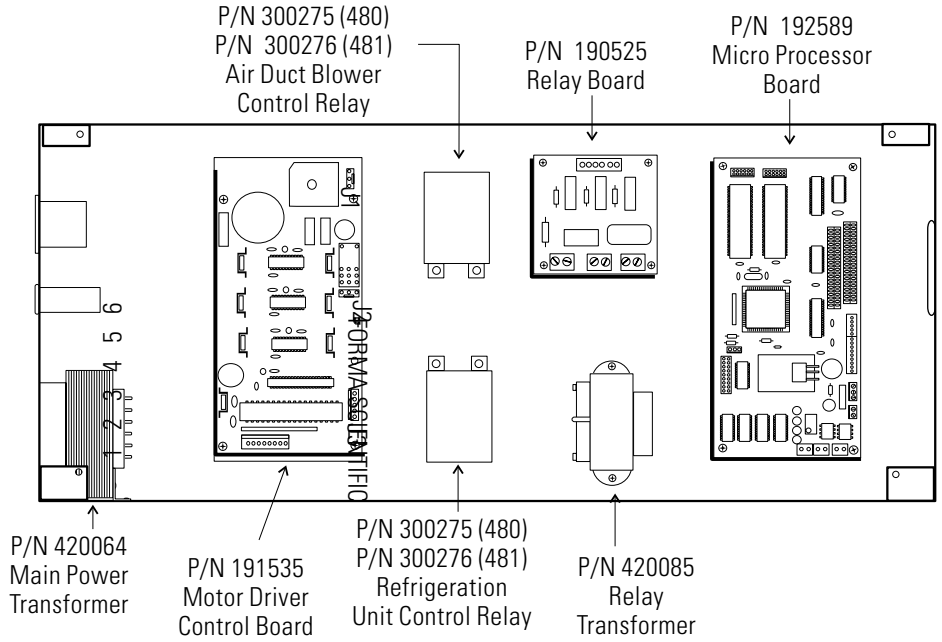

Figure 4-4. Electrical Component Locations, Relay Tray Compartment

Temperature Sensors

Two temperature sensors are located behind a perforated cover plate on the right side of the chamber. Refer to Figures 4-1 and 4-5. To access these sensors, pull outward on the two black press-in fasteners on the top edge of the cover and lift the cover upward. The cover is held in place with four metal clips.

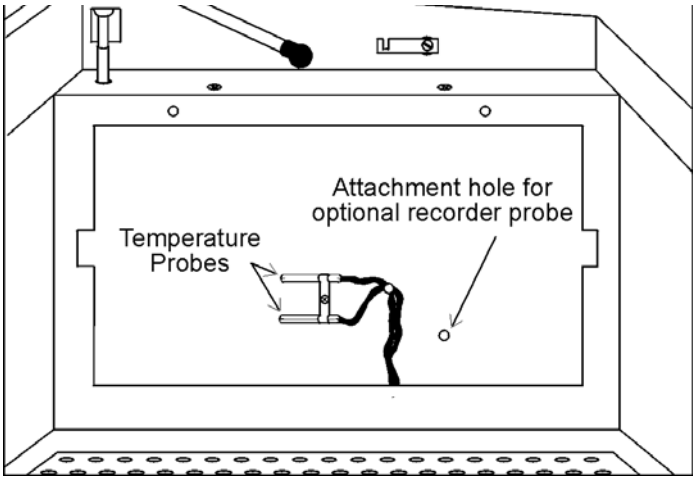

Figure 4-5. Chamber Right Side with Perforated Cover Plate Removed

To replace the cover, make sure all four clips engage the metal edges of the chamber and the two fasteners are firmly seated in their holes. Press the top of the fastener in until a "click" is heard. See Figure 4-6.

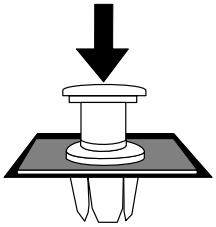

Figure 4-6. Fastener

Blower Fan Motors and Heating Elements

Locations of the Blower Motor and Ambient Fan Motor are shown in Figure 4-7. Removal of the relay tray is necessary to service the Blower Motor or the Heating Elements. Access to the heaters is through an access port on the front of the air plenum.

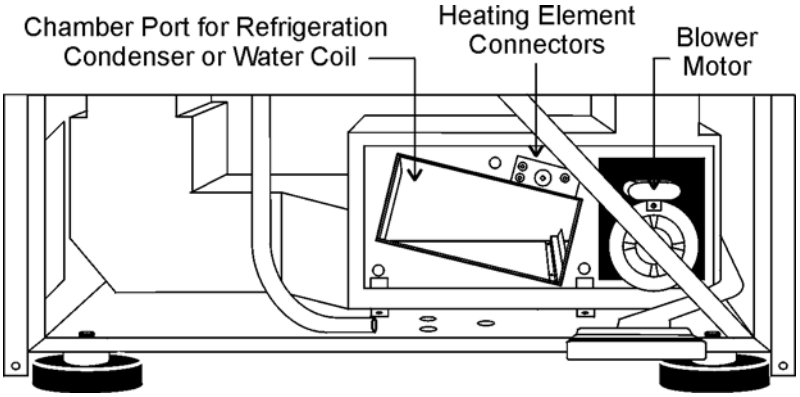

Figure 4-7. Air Plenum with Heating and Air Moving Components

Heater Element Circuit Breaker

Warning Only qualified service personnel should perform this procedure. ▲

Warning Remove and lock-out electrical power when working on or near the relay control tray and heating element connectors. Allow sufficient time for the heating elements to cool before reaching into that area. ▲

A manual reset circuit breaker is located between the heating element electrical connectors on the side of the air plenum. (Figures 4-7 and 4-8) The breaker can be reset by removing the front grille and reaching over the relay tray.

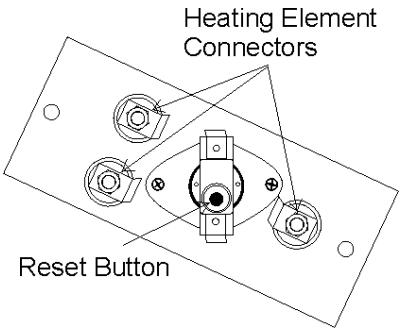

Figure 4-8. Connectors and Reset

Tune the Cabinet

After the console cabinet is in place and leveled, with the platform installed, turn the unit on and set the speed to 300RPM. Kneeling in front of the console, lightly touch the lower left and right corners of the cabinet. If one side seems to vibrate more than the other, raise or lower the corner support leg using the 3/4” open end wrench supplied in the parts bag. Continue this “fine tuning” until the vibrations are reduced as much as possible.

Service the Drive Belt

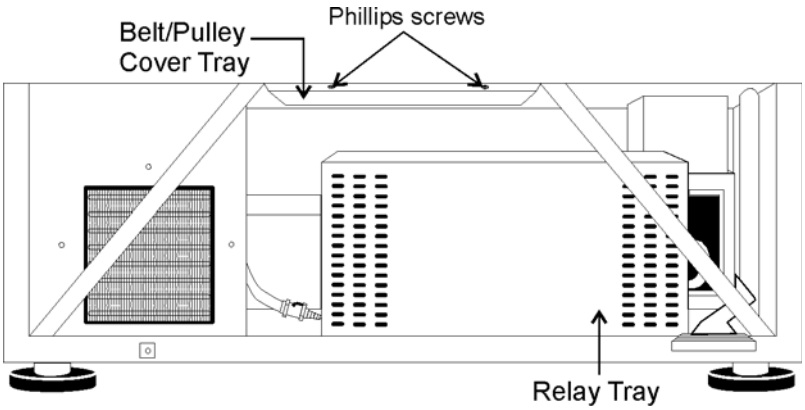

Figure 4-9. Front View of Cabinet with Grille Removed

The motor drive pulley, large mechanism pulley, belt and motor mounting bolts are visible after removing the grille and belt/pulley tray (Figures 4-9 and 4-10).

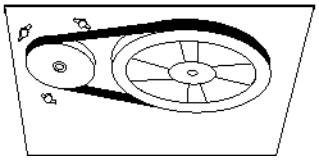

Figure 4-10. Drive Belt

Loosening the three 7/16” bolts at the base of the drive motor allows the belt to be changed or tension applied to the belt. Tighten the three bolts and torque to 10 ft. lbs.

Service the Drive Belt (continued)

To remove the pulleys from their shafts, use a 1/8” Allen wrench to remove two set screws from the belt groove of the larger pulley; use a 5/16” Allen wrench to remove the single set screw from the belt groove of the smaller pulley.

When replacing the pulleys, seat the larger pulley completely against its baseplate. The smaller pulley, however, is installed with 0.300” space between it and the baseplate.

Calibrate Speed (RPM)

An external calibrated speed measuring device can be used to adjust the actual platform speed so that the unit setpoint speed matches the external device measurement. Calibration of the platform speed is performed at the factory at 250 RPM. To change the actual platform speed, open the Configuration menu by pressing the down arrow, up arrow, and the Silence button, and then the down arrow twice, in the sequence shown at right.

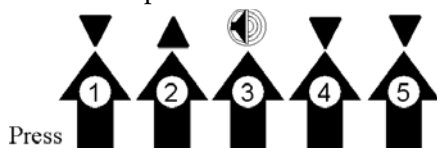

The screen at right appears on the display.

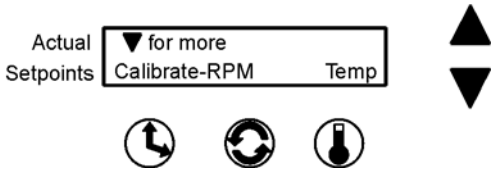

Then press the Speed button beneath RPM.

The value shown on this screen is the present Speed setpoint. Using the up and down arrows, increase or decrease the platform speed until the reading on an independent, accurate speed measuring device matches the Speed setpoint.

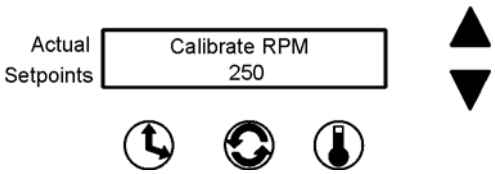

When finished, press any of the three buttons (Time, Speed, or Temp) to save the new setpoint value and return to the previous screen, or press nothing for about 15 seconds to save the new setpoint value and return to the Operating Screen.

Calibrate the Temperature

1. Place a 250ml Erlenmeyer flash (filled with approximately 100ml of liquid) in approximately the geometric center of the platform.
2. Suspend an independent temperature measuring device of known accuracy into the flask. The sensor should be submerged in the liquid but not in contact with the bottom or sides of the flask.
3. Adjust the shaker temp setpoint at desired calibration temperature.
4. Set the shaking speed setpoint to 75 RPM.
5. Start the unit and allow a minimum of 2 hours stabilization of cabinet and flask liquid.
6. Enter Calibration mode by pressing the down arrow, the up arrow, the Silence button. Then press the down arrow twice. The screen at right will appear on the display:

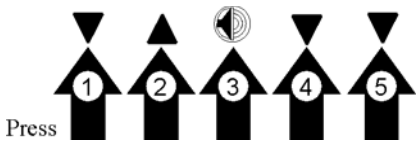

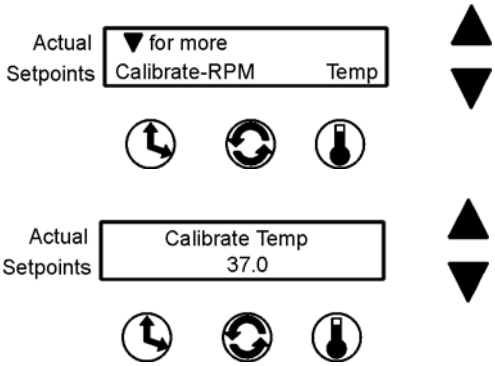

7. Press the Temperature button beneath Temp.
8. Using the up and down arrows, increase or decrease the temperature value to match the independent, accurate temperature measuring device.

9. When complete, press the Time, Speed, or Temp button to save the setting. The display will return to the Calibrate - RPM Temp screen. (Or, if nothing is pressed for about fifteen seconds, the display will return to the Operating Screen and the setting will be automatically saved to memory.)
10. Allow the cabinet to re-stabilize for 1 hour. Recheck temperature. If necessary, return to Step 6 until no additional adjustments are needed.
11. Temperature calibration is now complete. Remove calibration equipment and resume use.

Alarm Message	Alarm Criteria	Alarm Delay*	Alarm Ringback*	System State	Corrective Action
Over Temp Shutdown	Temperature at the over temp sensor is about 1° over shut down set point	None	15 min.	Alarm light on Audible alarm on Blower fans on Shaker motor on Heaters off	Press SILENCE to silence audible alarm Check for air intake blockage Over temperature probe malfunction Sensor connector unplugged Heater circuit not cycling Main circuit board failure Call Forma's Service Department
Main Temp Sensor	Sensor circuit is open or shorted beyond the expected resistance range in either direction	30 sec.	15 min.	Alarm light on Audible alarm on Blower fans on Shaker motor on Heaters off	Press SILENCE to silence audible alarm Check board connector Check sensor circuit Replace sensor Call Forma's Service Department
Over Temp Sensor	Sensor circuit is open or shorted beyond the expected resistance range in either direction.	30 sec.	15 min.	Alarm light on Audible alarm on Blower fans on Shaker motor on Heaters on	Press SILENCE to silence audible alarm Check board connector Check sensor circuit Replace sensor Call Forma's Service Department
Temperature is High	Temperature is above control set point by temperature tracking limit	None	15 min.	Alarm light on Audible alarm on Blower fans on Shaker motor on Heaters on	Press SILENCE to silence audible alarm Check temperature tracking limit Check sensor circuit Replace main temperature sensor Call Forma's Service Department
Temperature is Low	Temperature is below control set point by temperature tracking limit	30 min.	15 min.	Alarm light on Audible alarm on Blower fans on Shaker motor on Heaters on	Press SILENCE to silence audible alarm Check if lid is completely closed Check temperature tracking limit Check sensor circuit Replace main temperature sensor Call Forma's Service Department
	Electrical power has been disrupted	Upon power up	None	Not affected	Warning notice only Press SILENCE to silence audible alarm

435\misc.art\alarmCHART.cdr

* Alarm Delay and Ringback times are approximate

Alarm Message	Alarm Criteria	Alarm Delay*	Alarm Ringback*	System State	Corrective Action
Cycle Complete	Count-down time has reached zero	None	None	Alarm light on Audible alarm on Blower fans on Shaker motor off Heaters on	Advisory notice only Press SILENCE to silence alarm
RPM High	RPM is above control set point by tracking limit	2 min.	15 min.	Alarm light on Audible alarm on Blower fans on Shaker motor on Heaters on	Press SILENCE to silence audible alarm Check platform loading Check RPM tracking limit setting Shut the unit off and call Forma's Service Department
RPM Low	RPM is below control set point by tracking limit	2 min.	15 min.	Alarm light on Audible alarm on Blower fans on Shaker motor on Heaters on	Press SILENCE to silence audible alarm Check for overloaded platform Check for obstruction to edges of platform Check for low input AC mains voltage. Shut the unit off and call Forma's Service Department
Check Belt	Rotation sensor circuit sees no mechanical rotation or excessive belt slippage	None	15 min.	Alarm light on Audible alarm on Blower fans on Shaker motor on Heaters on	Press SILENCE to silence audible alarm Shut the unit off and check the belt If alarm persists, call Forma's Service Department
Audible is disabled!	Operator has turned off the audible alarm	None	None	Normal operation	Lower half of the LCD display will show this warning as long as the audible alarm remains turned off
Platform Stalled	Motor tries to start but platform is obstructed	15 sec.	15 min.	Alarm light on Audible alarm on Blower fans on Shaker motor on/off/on Heaters on	Press SILENCE to silence audible alarm Check for overloaded platform Check for platform edge obstruction Shut the unit off and check the belt If alarm persists, call Forma's Service Department
Check Fuse Power Failure	Primary drive motor fuse blown	15 sec.	15 min.	Alarm light on Audible alarm on Blower fans on Shaker motor off Heaters on	Press SILENCE to silence audible alarm Check/replace drive motor fuse If alarm persists, call Forma's Service Department

* Alarm Delay and Ringback times are approximate

Section 5 Specifications

Shaking

Range . . . . . .25-525 RPM

Accuracy . . . . . .±1 RPM

Motion . . . . . .One inch/orbital

Indicator . . . . . .LCD in 1 RPM increments

Temperature

Range .5°C (41°F) above ambient to 60°C (140°F)

Control . . . . . .±0.1°C

Uniformity . . . . . .±0.2°C (in flask)

Indicator . . . . . .LCD in 0.1°C increments

Timer

Range . . Programmable from 5 minutes to 200 hours, or continuous operation

Indicator . . . . . .LCD in 5 minute increments

Run Time . . LCD counts down for a timed run or counts up in a "Hold" function in 1 minute increments/decrements

Alarms

Temperature . .Adjustable tracking high/low temp

Speed . . . . . .Adjustable tracking high/low RPM

Time . . . . . .Cycle complete

Power Failure . . . . . .Loss of input power

Safety

Temperature . . . .. . .Software independent overtemperature and under-temperature shutdown circuit

Platform Speed . . . .Software independent speed control circuit

Platform Stall . . . . . Software independent motor overcurrent protection circuit

LCD (Liquid Crystal Display)

Top line displays actual elapsed run time, speed, and temperature. Bottom line displays user time, speed and temperture setpoints alternating with any active alarm messages.

Drive

Triple counterbalanced. Compensates for unbalanced platform loads

Drive Motor

1/3 HP brushless DC, permanently-lubricated ball bearing

Lid

Counterbalanced, hand or foot operated, with tempered thermal pane window and key lock.

Automatic Restart

Microprocessor retains all programming in non-volatile memory. In the event a power outage, the shaker restarts automatically.

Construction

Interior . . . . . .Stainless steel with coved corners

Exterior . . . . . .Cold rolled steel

Finish . . . . Powder coated for a durable, easily maintained surface

Platform . . . . . .Anodized brushed aluminum

Dimensions

Exterior . . . . . .45.0” W x 39.0” H x 30.0” F-B
. . . . . .(114.3cm x 99.1cm x 76.2cm)

Exterior (lid open) . 45.0” W x 39.0” H x 30.5” F-B
. . . . . .(114.3cm x 99.1cm x 77.5cm)

Interior . . . . . .34.3” W x 18.8” H x 21.1” F-B
. . . . . .(87.1cm x 47.8cm x 53.6cm)

Electrical

SHKE435HP

Nominal: 120VAC, 60Hz, 1 PH, 8.6 FLA

SHKE436HP

Nominal: 230VAC, 50/60Hz, 1 PH, 3.5 FLA

Data Output . . . . . .RS-232 standard

Remote Alarm Contacts . . Cycle Completion, Speed, Temperature and Power Failure Alarms as selected by user

Certifications

UL Standard No. 61010A-1

Ambient Operating Conditions

Temperature 18°C (64°F) to 40°C (104°F)

Humidity 80% RH at or below 31°C, decreasing linearly to 50% RH at 40°C

Capacity

Flasks From (91) 25ml up to (4) 6L

Weights

Net . . . . . .518 lbs. (235.2kg)

Optional Platforms

Size 29.5” x 18” (74.9cm x 45.7cm)

Clips 25ml, 50ml, 125ml, 250/300ml, 500ml
1L, 2L, 4L, 6L and 2800ml Fernbach sizes available

Racks . . Adjustable angle test tube holder with rack, 13-30mm

Filter

HEPA: Rated efficient at 0.3 microns

Size: 18” x 16” x 2” (45.7cm x 40.6cm x 5.1cm)

Intended Use

Orbital shakers are designed to provide increased aeration in a stable temperature environment

Unintended Use

1) Not intended for use in Class I or II applications as defined in 21 CFR

2) Not intended for mixtures of flammable materials

Sound Level

Not to exceed 85db

Safety Specifications

Indoor Use Only

Altitude . . . . . .2,000 meters

Temperature . . . . . .5°C to 40°C

Humidity . . 80% RH at or below 31°C, decreasing linearly to 50% RH at 40°C

Mains Supply Fluctuations . . ±10%

Installation Category II [1]

Pollution Degree 2 [2]

Class of Equipment I

---

1 Installation category (overvoltage category) defines the level of transient overvoltage which the instrument is designed to withstand safely. It depends on the nature of the electricity supply and its overvoltage protection means. For example, in CAT II which is the category used for instruments in installations supplied from a supply comparable to public mains such as hospital and research laboratories and most industrial laboratories, the expected transient overvoltage is 2500V for a 230V supply and 1500V for a 120V supply.

---

2 Pollution Degree describes the amount of conductive pollution present in the operating evironment. Pollution Degree 2 assumes that normally only non-conductive pollution such as dust occurs with the exception of accasional conductivity caused by condensation.

Section 6 Parts List

**Refer to Section 4 for electrical fuse information.*

SHKE435HP

Part No . . . . . .Description
129024 . . . . . .Pneumatic Spring, 80 lbs.
138009 . . . .Heater, Wirewound 450W 115V/230V
156089 . . . . . .Motor, Brushless 24V
191535 . . . . . .Motor Drive Board
191734 . . . . . .Display/Keypad Replacement Kit
190525 . . . . . .Relay Board
192589 . . . . . .Control Board Replacement
290160 . . . . . .Probe, 2252 Ohm/25°C, 1/8 x 2 (2)
300275 . . . . . .Relay, DPDT 20A 120V
400113 . . . . . .Thermostat - Opens at 200°F
420064 . . . . . .Transformer, 130VA
420085 . . . . . .Transformer, 25VA
800040 . . . . . .V-Belt, A x 43 1/2” x 45”
435051 . . . . . .Screwdriver, Phillips 8-3/4”
443020 . . . . . .Wrench, 5/32” Hex with T-handle
194046 . . Spare Part Screw Bag, (for platform and clips)
900113 . . . . . .Tubeaxial Fan, 665 CFM 115V
900092 . . . . . .230 CFM Blower 115V 60Hz
760164 . . . . . .HEPA Filter
760167 . . . . . .Air Filter 9.5” x 23.625”
230107 . . . . . .100mA Fuse (for optional recorder) T.D. 5mm x 20mm
230144 . . . . . .250mA Fuse T.D 5mm x 20mm
230145 . . . . . .1.6A Fuse T.D. 5mm x 20mm
443021 . . . . . .¾” Open End Wrench
107003 . . . . . .Lid Glass Window
990024 . . . . . .Lid Gasket

SHKE436HP

Part No	Description
129024	Pneumatic Spring, 80 lbs.
138009	Heater, Wirewound 450W 115V/230V
156089	Motor, Brushless 24V
191535	Motor Drive Board
191545	Temp Control Board
191734	Display/Keypad Replacement Kit
192589	Control Board Replacement
290137	Probe, 2252 Ohm/25°C, 1/8 x 2 (2)
300276	Relay, DPDT 20A 240V
400113	Thermostat
420064	Transformer, 130VA
420085	Transformer, 25VA
800040	V-Belt, A x 43 1/2” x 45”
435051	Screwdriver, Phillips 8-3/4”
443020	Wrench, 5/32” Hex with T-handle
194046	Spare Part Screw Bag, (for platform and clips)
900149	Tubeaxial Fan 547 CFM 230V
900093	Blower 230 CFM 220V 50Hz
760164	HEPA Filter
760167	Air Filter 9.5” x 23.625”
230107	100mA Fuse (for optional recorder) T.D. 5mm x 20mm
230144	250mA Fuse T.D 5mm x 20mm
230145	1.6A Fuse T.D. 5mm x 20mm
443021	¾” Open End Wrench
107003	Lid Glass Window
990024	Lid Gasket

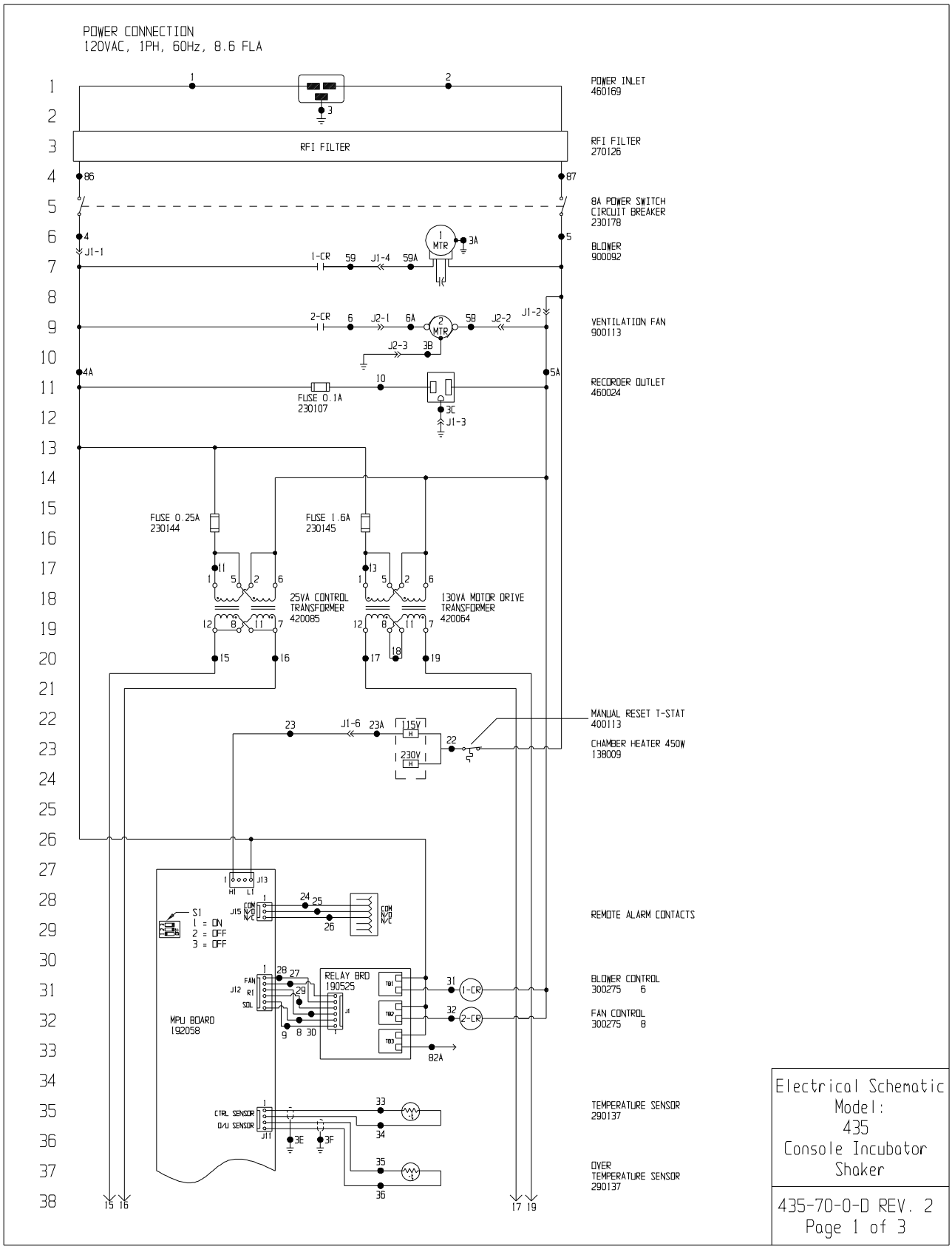
POWER CONNECTION
120VAC, 1PH, 60Hz, 8.6 FLA
POWER INLET
460169
RFI FILTER
RFI FILTER
270126
8A POWER SWITCH
CIRCUIT BREAKER
230178
BLOWER
900092
VENTILATION FAN
900113
RECORDER OUTLET
460024
FUSE 0.1A
230107
FUSE 0.25A
230144
FUSE 1.6A
230145
25VA CONTROL
TRANSFORMER
420085
130VA MOTOR DRIVE
TRANSFORMER
420064
MANUAL RESET T-STAT
400113
CHAMBER HEATER 450W
138009
REMOTE ALARM CONTACTS
S1
1 = ON
2 = OFF
3 = OFF
MPU BOARD
192058
RELAY BRD
190525
BLOWER CONTROL
300275 6
FAN CONTROL
300275 8
TEMPERATURE SENSOR
290137
OVER
TEMPERATURE SENSOR
290137
Electrical Schematic
Model:
435
Console Incubator
Shaker
435-70-0-D REV. 2
Page 1 of 3

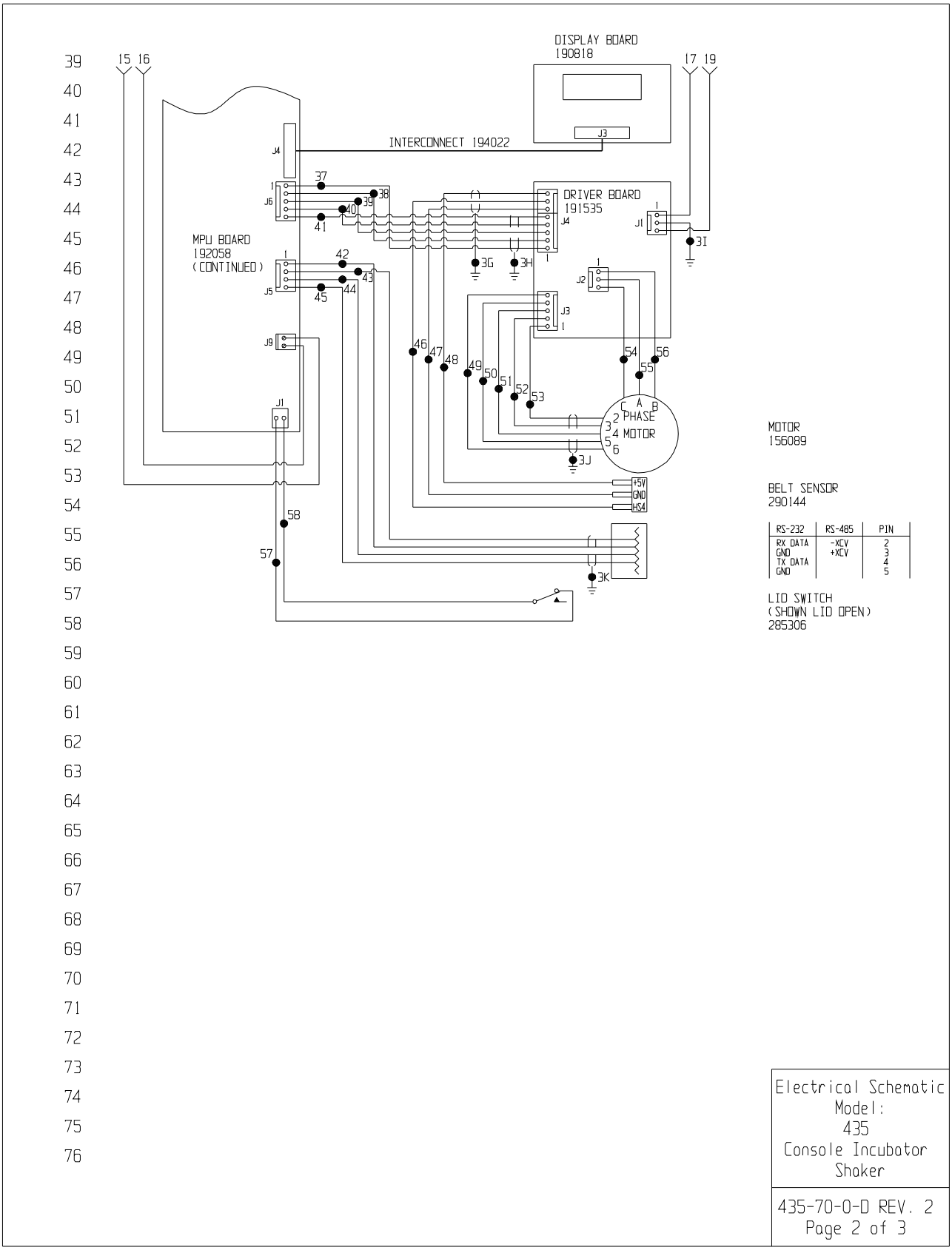

RS-232	RS-485	PIN
RX DATA	-XCV	2
GND	+XCV	3
TX DATA		4
GND		5

WIRE REFERENCE CHART

WIRE #	GAUGE	COLOR	WIRE #	GAUGE	COLOR
1	14	BROWN	32	18	BROWN
2	14	BLUE	33	24	RED
3	14	GREEN	34	24	BLACK
3A-3C	18	GRN/YEL	35	24	RED
3E-3K		SHIELDS	36	24	BLACK
4	14	BLACK	37	24	BLACK
4A	14	BLACK	38	24	RED
5	14	WHITE	39	24	GREEN
5A	14	WHITE	40	24	WHITE
5B	14	WHITE	41	24	BROWN
6	14	BROWN	42	24	BLACK
6A	14	BROWN	43	24	RED
8	24	BLACK	44	24	GREEN
9	24	PURPLE	45	24	WHITE
10	18	BROWN	46	24	GREEN
11	18	RED	47	24	BLACK
13	18	YELLOW	48	24	RED
15	18	BROWN	49	24	BLACK
16	18	BLUE	50	24	RED
17	18	RED	51	24	GREEN
18	18	ORANGE	52	24	WHITE
19	18	RED	53	24	BROWN
22	18	YELLOW	54	18	RED
23	18	BROWN	55	18	WHITE
23A	18	BROWN	56	18	BLACK
24	24	GREEN	57	24	BLACK
25	24	RED	58	24	BLACK
26	24	BLACK	59	18	BROWN
27	24	BLACK	59A	18	BROWN
28	24	RED	82A	18	PURPLE
29	24	BLACK	86	14	BROWN
30	24	ORANGE	87	14	BLUE
31	18	YELLOW			

REV	ECN NO.	DATE	BY	CAD	APPD	DESCRIPTION OF REVISION
2	OS-751	04-03-14	GLS	GLS	CCS	CHG MICRO BD FROM 191542
1	OS-423	09-01-11	GSW	SAG	DRP	CHANGES TO MTR 2 (900113)
0	OS-279	02-11-04	BOB	pdk	LDN	RELEASED FOR PRODUCTION

ATTENTION
OBSERVE PRECAUTIONS
ELECTROSTATIC
SENSITIVE DEVICES

THIS DOCUMENT CONTAINS PROPRIETARY INFORMATION AND SUCH INFORMATION IS NOT TO BE DISCLOSED TO OTHERS FOR ANY PURPOSE NOR USED FOR MANUFACTURING PURPOSES WITHOUT WRITTEN PERMISSION FROM THERMO FISHER SCIENTIFIC

ThermoFisher SCIENTIFIC
BOX 649, MARIETTA, OHIO 45750

MODEL/PART NAME: 435 CONSOLE INCUBATOR SHAKER
DWG TITLE: ELECTRICAL SCHEMATIC
DWN: pdk | CAD: pdk | APPD: | DATE: 02-11-04 | SCALE: NONE
MATERIAL: N/A
PAINT COLOR: N/A
TOLERANCE UNLESS OTHERWISE SPECIFIED
ANGLES: DECIMAL: .XX=± .XXX=±
DRAWING NUMBER 435-70-0
SIZE D

Electrical Schematic
Model:
435
Console Incubator
Shaker

435-70-0-D REV. 2
Page 3 of 3

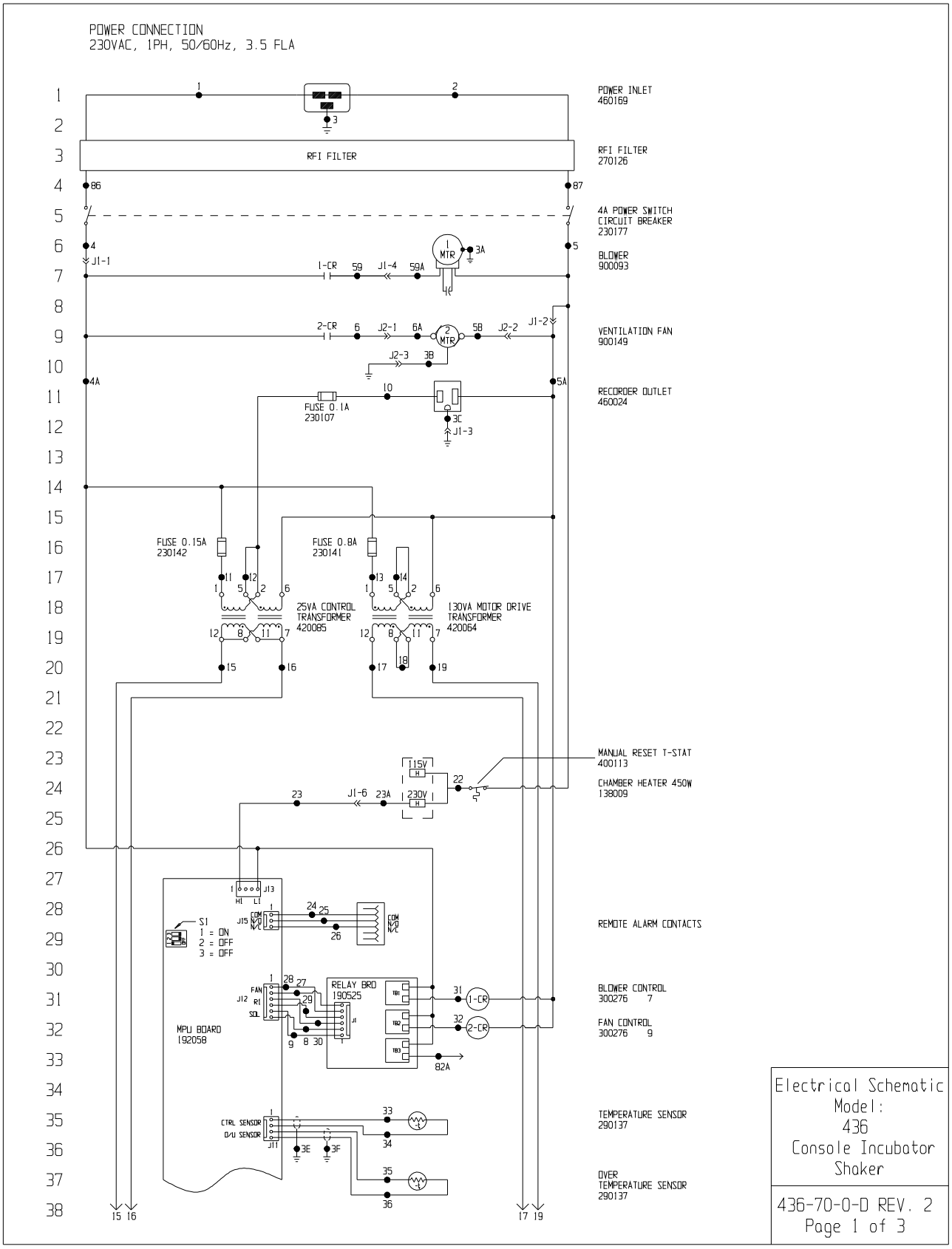
POWER CONNECTION
230VAC, 1PH, 50/60Hz, 3.5 FLA
POWER INLET
460169
RFI FILTER
270126
RFI FILTER
4A POWER SWITCH
CIRCUIT BREAKER
230177
BLOWER
900093
VENTILATION FAN
900149
RECORDER OUTLET
460024
FUSE 0.1A
230107
FUSE 0.15A
230142
FUSE 0.8A
230141
25VA CONTROL
TRANSFORMER
420085
130VA MOTOR DRIVE
TRANSFORMER
420064
MANUAL RESET T-STAT
400113
CHAMBER HEATER 450W
138009
REMOTE ALARM CONTACTS
S1
1 = ON
2 = OFF
3 = OFF
MPU BOARD
192058
RELAY BRD
190525
BLOWER CONTROL
300276 7
FAN CONTROL
300276 9
TEMPERATURE SENSOR
290137
OVER
TEMPERATURE SENSOR
290137
Electrical Schematic
Model:
436
Console Incubator
Shaker
436-70-0-D REV. 2
Page 1 of 3

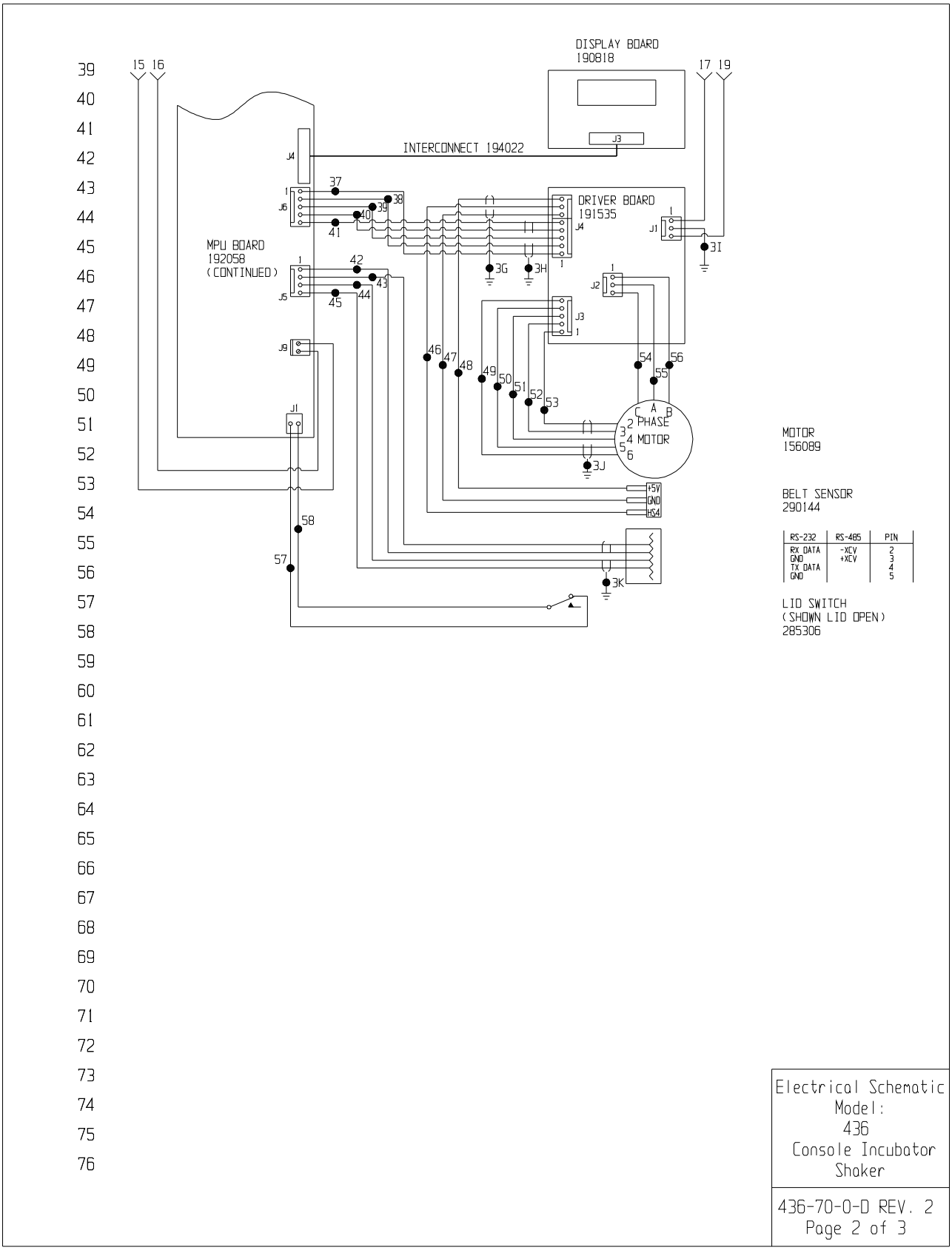
DISPLAY BOARD
190818
J3
INTERCONNECT 194022
J4
MPU BOARD
192058
(CONTINUED)
J6
J5
J9
J1
DRIVER BOARD
191535
J4
J3
J2
J1
15 16
17 19
37
38
39
40
41
42
43
44
45
46
47
48
49
50
51
52
53
54
55
56
57
58
3G
3H
3I
3J
3K
C A B
2 PHASE
3 4 MOTOR
5 6
+5V
GND
+5V
MOTOR
156089
BELT SENSOR
290144
RS-232 | RS-485 | PIN
RX DATA | -XCV | 2
GND | +XCV | 3
TX DATA | | 4
GND | | 5
LID SWITCH
(SHOWN LID OPEN)
285306
Electrical Schematic
Model:
436
Console Incubator
Shaker
436-70-0-D REV. 2
Page 2 of 3

WIRE REFERENCE CHART

WIRE #	GAUGE	COLOR	WIRE #	GAUGE	COLOR
1	14	BROWN	31	18	YELLOW
2	14	BLUE	32	18	BROWN
3	14	GRN/YEL	33	24	RED
3A-3C	18	GRN/YEL	34	24	BLACK
3E-3K		SHIELDS	35	24	RED
4	14	BLACK	36	24	BLACK
4A	14	BLACK	37	24	BLACK
5	14	WHITE	38	24	RED
5A	14	WHITE	39	24	GREEN
5B	14	WHITE	40	24	WHITE
6	14	BROWN	41	24	BROWN
6A	14	BROWN	42	24	BLACK
8	24	BLACK	43	24	RED
9	24	PURPLE	44	24	GREEN
10	18	BROWN	45	24	WHITE
11	18	RED	46	24	GREEN
12	18	ORANGE	47	24	BLACK
13	18	YELLOW	48	24	RED
14	18	BROWN	49	24	BLACK
15	18	BROWN	50	24	RED
16	18	BLUE	51	24	GREEN
17	18	RED	52	24	WHITE
18	18	ORANGE	53	24	BROWN
19	18	RED	54	18	RED
22	18	YELLOW	55	18	WHITE
23	18	BROWN	56	18	BLACK
23A	18	BROWN	57	24	BLACK
24	24	GREEN	58	24	BLACK
25	24	RED	59	18	BROWN
26	24	BLACK	59A	18	BROWN
27	24	BLACK	82A	18	PURPLE
28	24	RED	86	14	BROWN
29	24	BLACK	87	14	BLUE
30	24	ORANGE			

REV	ECN NO.	DATE	BY	CAD	APPD	DESCRIPTION OF REVISION
2	DS-751	04-03-14	GLS	GLS	CCS	CHG MICRO BD FROM 191542
1	DS-423	09-01-11	GSW	SAG	DRP	900149 WAS 900111
0	DS-279	02-11-04	BDB	pdk	LDN	RELEASED FOR PRODUCTION

ATTENTION
OBSERVE PRECAUTIONS
ELECTROSTATIC
SENSITIVE DEVICES

THIS DOCUMENT CONTAINS PROPRIETARY INFORMATION AND SUCH INFORMATION IS NOT TO BE DISCLOSED TO OTHERS FOR ANY PURPOSE NOR USED FOR MANUFACTURING PURPOSES WITHOUT WRITTEN PERMISSION FROM THERMO FISHER SCIENTIFIC

Thermo Fisher SCIENTIFIC
BOX 649, MARIETTA, OHIO 45750

MODEL/PART NAME: 436 CONSOLE INCUBATOR SHAKER
DWG TITLE: ELECTRICAL SCHEMATIC
DWN: pdk CAD: pdk APPD: DATE: 02-11-04 SCALE: NONE
MATERIAL: N/A
PAINT COLOR: N/A
TOLERANCE UNLESS OTHERWISE SPECIFIED
ANGLES: DECIMAL: .XX±
.XXX±
DRAWING NUMBER 436-70-0
SIZE D

Electrical Schematic
Model:
436
Console Incubator
Shaker

436-70-0-D REV. 2
Page 3 of 3

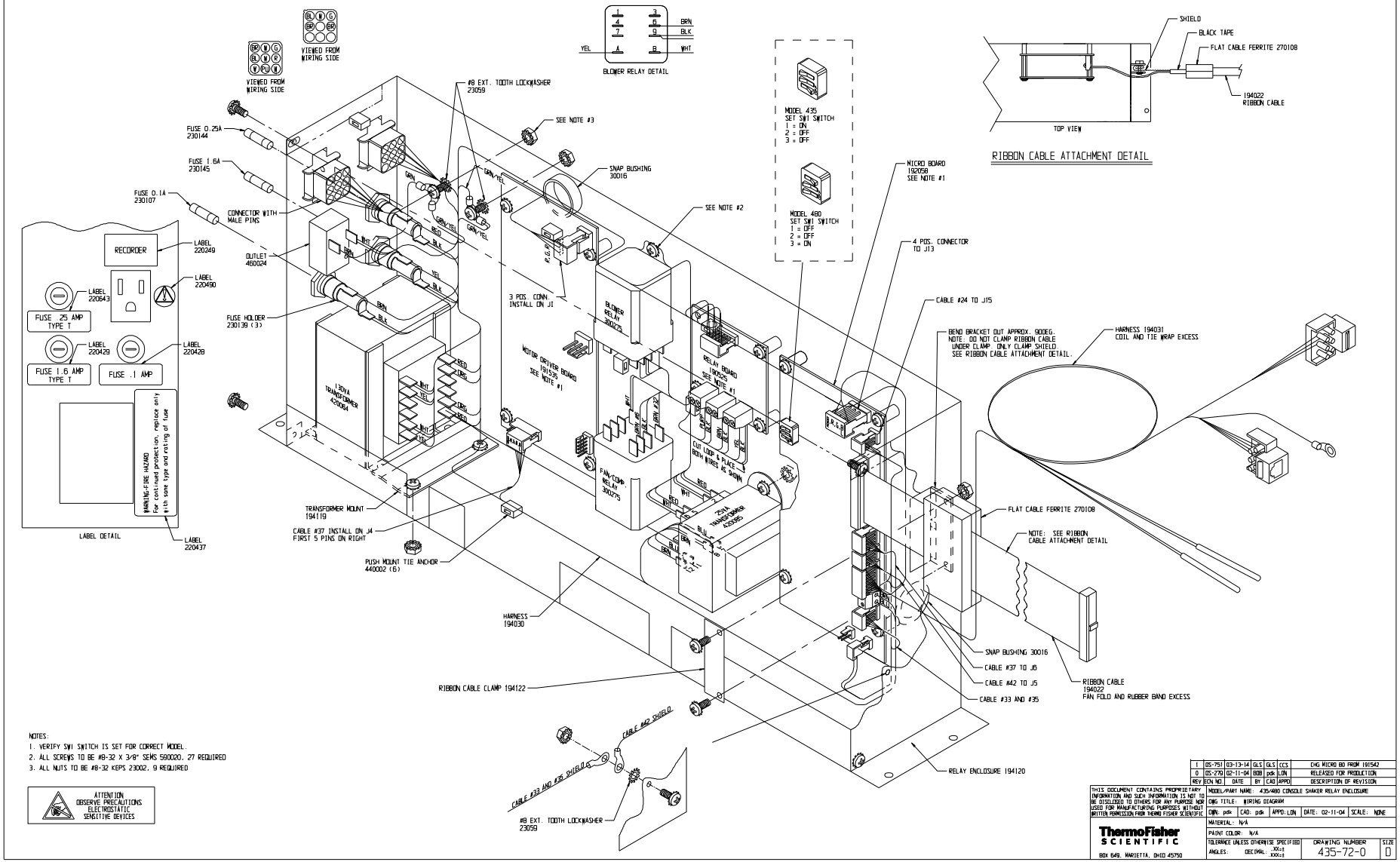

NOTES:
1. VERIFY SW1 SWITCH IS SET FOR CORRECT MODEL.
2. ALL SCREWS TO BE #8-32 X 3/8" SEMS 590020, 27 REQUIRED
3. ALL NUTS TO BE #8-32 KEPS 23002, 9 REQUIRED

REV	ECN NO.	DATE	BY	CAD	APPD	DESCRIPTION OF REVISION
1	05-751	03-13-14	GLS	GLS	CCS	CHG MICRO BD FROM 191542
0	05-270	02-11-04	BDB	pdk	LDN	RELEASED FOR PRODUCTION

THIS DOCUMENT CONTAINS PROPRIETARY INFORMATION AND SUCH INFORMATION IS NOT TO BE DISCLOSED TO OTHERS FOR ANY PURPOSE NOR USED FOR MANUFACTURING PURPOSES WITHOUT WRITTEN PERMISSION FROM THERMO FISHER SCIENTIFIC

MODEL/PART NAME: 435/480 CONSOLE SHAKER RELAY ENCLOSURE
DWG TITLE: WIRING DIAGRAM
DWN: pdk | CAD: pdk | APPD: LDN | DATE: 02-11-04 | SCALE: NONE
MATERIAL: N/A
PAINT COLOR: N/A
TOLERANCE UNLESS OTHERWISE SPECIFIED
ANGLES: DECIMAL .XX=±1 .XXX=±1
DRAWING NUMBER: 435-72-0
SIZE: D

ThermoFisher SCIENTIFIC
BOX 649, MARIETTA, OHIO 45750

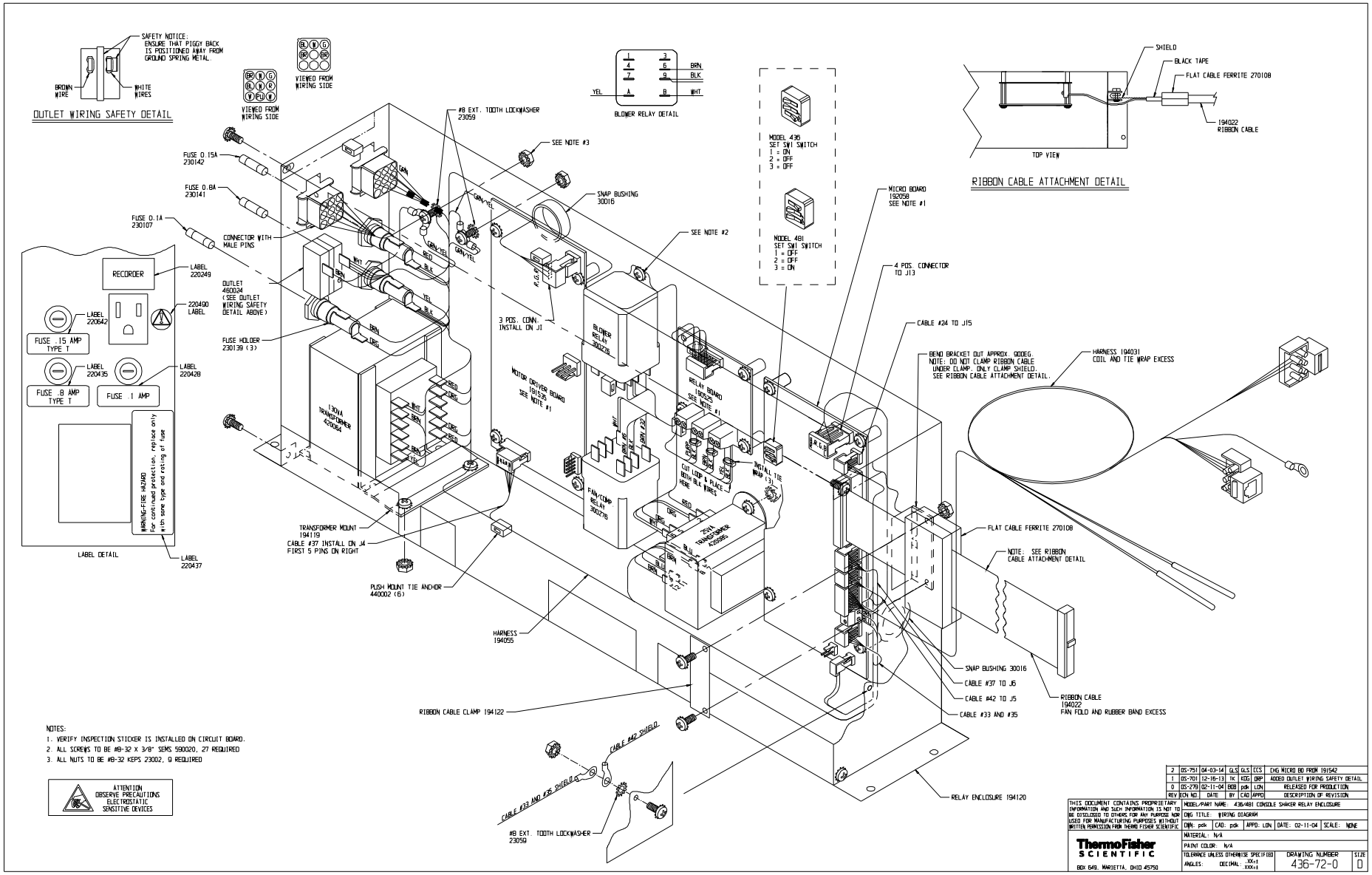

NOTES:

1. VERIFY INSPECTION STICKER IS INSTALLED ON CIRCUIT BOARD.
2. ALL SCREWS TO BE #8-32 X 3/8" SEMS 590020, 27 REQUIRED
3. ALL NUTS TO BE #8-32 KEPS 23002, 9 REQUIRED

ATTENTION OBSERVE PRECAUTIONS ELECTROSTATIC SENSITIVE DEVICES

REV	ECN NO.	DATE	BY	CAD	APPD	DESCRIPTION OF REVISION
2	DS-751	04-03-14	GLS	GLS	ECS	CHG MICRO BD FROM 191542
1	DS-701	12-16-13	TK	KSG	DRP	ADDED OUTLET WIRING SAFETY DETAIL
0	DS-279	02-11-04	BDB	pdk	LDN	RELEASED FOR PRODUCTION

THIS DOCUMENT CONTAINS PROPRIETARY INFORMATION AND SUCH INFORMATION IS NOT TO BE DISCLOSED TO OTHERS FOR ANY PURPOSE NOR USED FOR MANUFACTURING PURPOSES WITHOUT WRITTEN PERMISSION FROM THERMO FISHER SCIENTIFIC

MODEL/PART NAME: 436/481 CONSOLE SHAKER RELAY ENCLOSURE

DWG TITLE: WIRING DIAGRAM

DWN: pdk | CAD: pdk | APPD: LDN | DATE: 02-11-04 | SCALE: NONE

MATERIAL: N/A

PAINT COLOR: N/A

TOLERANCE UNLESS OTHERWISE SPECIFIED: ANGLES: DECIMAL: .XX±1 .XXX±1

DRAWING NUMBER: 436-72-0

SIZE: D

ThermoFisher SCIENTIFIC
BOX 649, MARIETTA, OHIO 45750

THERMO FISHER SCIENTIFIC SHAKER WARRANTY USA

The Warranty Period starts two weeks from the date your equipment is shipped from our facility. This allows shipping time so the warranty will go into effect at approximately the same time your equipment is delivered. The warranty protection extends to any subsequent owner during the warranty period.

During the first year, component parts proven to be non-conforming in materials or workmanship will be repaired or replaced at Thermo's expense, labor included. For an additional 4 years, component parts proven to be non-conforming in materials or workmanship will be repaired or replaced at Thermo's expense, labor excluded. In addition, the Orbital Shaker mechanism is warranted for Unit Production Life, parts only, F.O.B. factory. The mechanism is defined as the bearing assemblies. Unit Production Life is defined as 10 years. The warranty will be void if the equipment is altered without written authorization from Thermo. Installation and calibration is not covered by this warranty agreement. The Technical Services Department must be contacted for warranty determination and direction prior to performance of any repairs. Expendable items, i.e., glass, filters, light bulbs and lid gaskets are excluded from this warranty. Extended warranties are dependent on the units being maintained regularly as stated in the operation and service manuals.

Replacement or repair of components parts or equipment under this warranty shall not exceed the warranty to either the equipment or to the component part beyond the original warranty period. The Technical Services Department must give prior approval for return of any components or equipment.

THIS WARRANTY IS EXCLUSIVE AND IN LIEU OF ALL OTHER WARRANTIES, WHETHER WRITTEN, ORAL, OR IMPLIED. NO WARRANTIES OF MERCHANTABILITY OR FITNESS FOR A PARTICULAR PURPOSE SHALL APPLY. Thermo shall not be liable for any indirect or consequential damages including, without limitation, damages relating to lost profits or loss of products.

Your local Thermo Sales Office is ready to help with comprehensive site preparation information before your equipment arrives. Printed instruction manuals carefully detail equipment installation, operation, and preventive maintenance.

If equipment service is required, please call your Technical Services Department at 1-800-438-4851 (USA and Canada) or 1-740-373-4763. We're ready to answer any questions on equipment warranty, operation, maintenance, service and special applications. Outside the USA, contact your local distributor for warranty information.

Rev. 0 1/09

ISO 9001 REGISTERED

THERMO FISHER SCIENTIFIC INTERNATIONAL SHAKER WARRANTY

The Warranty Period starts two months from the date your equipment is shipped from our facility. This allows shipping time so the warranty will go into effect at approximately the same time your equipment is delivered. The warranty protection extends to any subsequent owner during the warranty period.

During the first year, component parts proven to be non-conforming in materials or workmanship will be repaired or replaced at Thermo's expense, including labor. For an additional 4 years, component parts proven to be non-conforming in materials or workmanship will be repaired or replaced at Thermo's expense, excluding labor. In addition, the Orbital Shaker drive mechanism is warranted for Unit Production Life, parts only, F.O.B. factory. The mechanism is defined as the bearing assemblies. Unit Production Life is defined as 10 years. The warranty will be void if the equipment is altered without the written authorization from Thermo. Installation and calibration is not covered by this warranty agreement. The local Thermo Fisher Scientific office must be contacted for warranty determination and direction prior to performance of any repairs. Expendable items, i.e., glass, filters, light bulbs and lid gaskets are excluded from this warranty. Extended warranties are dependent on the units being maintained regularly as stated in the operation and service manuals.

Replacement or repair of component parts or equipment under this warranty shall not exceed the warranty to either the equipment or to the component part beyond the original warranty period. The local Thermo Fisher Scientific office must give prior approval for return of any components or equipment.

THIS WARRANTY IS EXCLUSIVE AND IN LIEU OF ALL OTHER WARRANTIES, WHETHER WRITTEN, ORAL, OR IMPLIED. NO WARRANTIES OF MERCHANTABILITY OR FITNESS FOR A PARTICULAR PURPOSE SHALL APPLY. Thermo shall not be liable for any indirect or consequential damages including, without limitation, damages relating to lost profits or loss of products.

Thermo International Sales Office is ready to help with comprehensive site preparation information before your equipment arrives. Printed instruction manuals carefully detail equipment installation, operation, and preventative maintenance.

If equipment service is required, please call your local Thermo Fisher Scientific office. We're ready to answer your questions on equipment warranty, operation, maintenance, service and special applications.

Rev. 0 1/09

ISO 9001 REGISTERED

CE Declaration of Conformity

Manufacturer: Thermo Fisher Scientific (Asheville) LLC
401 Millcreek Road
Marietta, Ohio 45750
U.S.A.

hereby declares under its sole responsibility that the following product

Product Description: MaxQ HP Incubated Floor Shaker

Product Designations: **436 (SHKE436HP)**

Year of Initial Marking (CE): 1998

Affected Serial Numbers: Release 1 thru 7
(Release Level [REL#] shown on Serial Tag)

This product conforms to the following European Union Directive(s):

EMC: 2004/108/EC
LVD: 2006/95/EC

This product conforms to the following Harmonized, International and National Standards:

EMC:	**LVD:**
EN 61326-1	EN 61010-1 2nd Edition
EN 50081-1	CAN/CSA C22.2 No. 61010-1
EN 50082-1	CAN/CSA C22.2 No. 61010-2-010 & -2-051

Mark Bartlett 18 January 2012
Mark Bartlett
Supervisor, EPD

ThermoFisher SCIENTIFIC

Rev. 6

Thermo Fisher Scientific
401 Millcreek Road
Marietta, Ohio 45750
United States

www.thermofisher.com

ThermoFisher
SCIENTIFIC