Reverse Osmosis System

Series 1267

Operating Manual and Parts List LT1267X1 Rev. 1

Part of Thermo Fisher Scientific

Thermo SCIENTIFIC

Models covered in this manual		
Model	**Volume**	**Voltage**
D12671 (7157)	6 liter/hour	100-240V

MANUAL NUMBER LT1267X1 (7007157)

REV	ECR/ECN	DATE	DESCRIPTION	By
1	26652/SI-10424	10/8/10	Max pressure updated on pg 3-1	ccs
0	--	8/5/10	Transfer to Marietta (was LT1267X1 7/3/08)	ccs

Important Read this instruction manual. Failure to read, understand and follow the instructions in this manual may result in damage to the unit, injury to operating personnel, and poor equipment performance. ▲

Caution All internal adjustments and maintenance must be performed by qualified service personnel. ▲

Material in this manual is for information purposes only. The contents and the product it describes are subject to change without notice. Thermo Fisher Scientific makes no representations or warranties with respect to this manual. In no event shall Thermo be held liable for any damages, direct or incidental, arising out of or related to the use of this manual.

©2010 Thermo Fisher Scientific. All rights reserved.

Important operating and/or maintenance instructions. Read the accompanying text carefully.

Potential electrical hazards. Only qualified persons should perform procedures associated with this symbol.

Equipment being maintained or serviced must be turned off and locked off to prevent possible injury.

Hot surface(s) present which may cause burns to unprotected skin, or to materials which may be damaged by elevated temperatures.

Marking of electrical and electronic equipment, which applies to electrical and electronic equipment falling under the Directive 2002/96/EC (WEEE) and the equipment that has been put on the market after 13 August 2005.

This product is required to comply with the European Union's Waste Electrical & Electronic Equipment (WEEE) Directive 2002/96/EC. It is marked with the WEEE symbol. Thermo Fisher Scientific has contracted with one or more recycling/disposal companies in each EU Member State European Country, and this product should be disposed of or recycled through them. Further information on Thermo's compliance with this directive, the recyclers in your country and information on Thermo products will be available at www.thermofisher.com.

- ✔ Always use the proper protective equipment (clothing, gloves, goggles, etc.)
- ✔ Always dissipate extreme cold or heat and wear protective clothing.
- ✔ Always follow good hygiene practices.
- ✔ Each individual is responsible for his or her own safety.

Do You Need Information or Assistance on Thermo Scientific Products?

If you do, please contact us 8:00 a.m. to 6:00 p.m. (Eastern Time) at:

1-740-373-4763	Direct
1-800-438-4851	Toll Free, U.S. and Canada
1-877-213-8051	FAX
http://www.thermoscientific.com	Internet Worldwide Web Home Page
service.led.marietta@thermofisher.com	Service E-Mail Address

Our **Sales Support** staff can provide information on pricing and give you quotations. We can take your order and provide delivery information on major equipment items or make arrangements to have your local sales representative contact you. Our products are listed on the Internet and we can be contacted through our Internet home page.

Our **Service Support** staff can supply technical information about proper setup, operation or troubleshooting of your equipment. We can fill your needs for spare or replacement parts or provide you with on-site service. We can also provide you with a quotation on our Extended Warranty for your Thermo Scientific products.

Whatever Thermo Scientific products you need or use, we will be happy to discuss your applications. If you are experiencing technical problems, working together, we will help you locate the problem and, chances are, correct it yourself...over the telephone without a service call.

When more extensive service is necessary, we will assist you with direct factory trained technicians or a qualified service organization for on-the-spot repair. If your service need is covered by the warranty, we will arrange for the unit to be repaired at our expense and to your satisfaction.

Regardless of your needs, our professional telephone technicians are available to assist you Monday through Friday from 8:00 a.m. to 6:00 p.m. Eastern Time. Please contact us by telephone or fax. If you wish to write, our mailing address is:

Thermo Fisher Scientific
401 Millcreek Road, Box 649
Marietta, OH 45750

International customers, please contact your local Thermo Scientific distributor.

Table of Contents

Section 1 Safety Information 1-1

Section 2 Introduction 2-1

Section 3 Specifications 3-1

Section 4 Unpacking and Installation 4-1

Choosing a Site 4-2
Tubing Installation 4-3
Tubing Adapter Installation 4-3
Tubing Removal 4-4
Wall Mounting 4-5
Quick Disconnect Fittings 4-5
Bench Mounting 4-5
Cartridge / Membrane Installation 4-6
MPS Cartridge Installation 4-7
Prefilter Installation 4-7
Membrane Installation 4-8
Carbon Filter Installation 4-8
Water Connections 4-9
Reject Water Connection 4-10
Feed Water Connection 4-10
Product Water Connection 4-10

Section 5 Controls 5-1

Control Panel 5-1
Electrical/Reservoir Connections 5-2
Switches 5-2
Install Control Panel in Remote Location 5-3

Section 6 Initial Operation 6-1

Initial Operation 6-2

Section 7 Normal Operation 7-1
Flushing the Membrane 7-1
Resetting the Membrane Timer 7-2
Resetting the Carbon Timer 7-2
Manual 4 Minute Flush 7-2
Standby Mode 7-3
Pressure Gauges 7-3
Main Fuse Replacement 8-1

Section 8 Maintenance 8-1
Membrane Replacement 8-2
MPS Replacement 8-3
Prefilter Replacement 8-3
Shutdown 8-4
Carbon Replacement 8-4

Section 9 Troubleshooting 9-1

Section 10 Replacement Parts 10-1
Consumables 10-1
General Maintenance Parts 10-1
Safety Stock 10-2
Optional Accessory Ordering Information 10-2
Ordering Procedures 10-2

Section 11 Flow Diagram 11-1
Operating Log 11-2
Wiring Diagram 11-3

Section 1 Safety Information

Your Thermo Scientific Reverse Osmosis (RO) System has been designed with function, reliability, and safety in mind. It is the user's responsibility to install it in conformance with local electrical codes. This manual contains important operating and safety information. The user must carefully read and understand the contents of this manual prior to the use of this equipment. For safe operation, pay attention to Notes, Cautions, and Warnings throughout the manual.

Water purification technology employs one or more of the following: chemicals, electrical devices, mercury vapor lamps, steam and heated vessels. Care should be taken when installing, operating or servicing Thermo Scientific products. The specific safety notes pertinient to this product are listed below.

Warnings

To avoid electrical shock, always:

1. Use a properly grounded electrical outlet of correct voltage and current handling capacity.

2. Do not mount your Thermo Scientific Reverse Osmosis System directly over equipment that requires electrical service. Routine maintenance of this unit may involve water spillage and subsequent electrical shock hazard, if improperly located.

3. Replace fuses with those of the same type and rating of fuse.

4. Disconnect from the power supply prior to maintenance and servicing.

To avoid personal injury:

1. Do not use in the presence of flammable or combustible materials; fire or explosion may result. This device contains components which may ignite such materials.

2. This device is to be used with potable water feeds only.

3. Refer servicing to qualified personnel.

4. Discard the RO membrane product water for at least two hours during initial operation. The membrane contains a preservative solution to prevent microbiological growth.

5. If the equipment is used in a manner not specified by the manufacturer, protection provided by the equipment may be impaired.

Section 2 Introduction

Congratulations on your purchase of a Thermo Scientific RO System. This unit is designed to provide reverse osmosis water for your lab or ultrapure water system. It uses a thin film composite membrane combined with three stages of pretreatment to produce reverse osmosis water.

Careful attention to the following instructions will assure that the system operates properly and produces water to specifications. Also, be sure to fill out and return the enclosed warranty registration card. We would like to receive the information requested, and it will help us assure you of proper warranty coverage.

Each unit requires a separate storage reservoir for automatic operation. Please make sure you have an adequate storage reservoir before installing your RO system.

Note Do not use this product for anything other than its intended usage. ▲

Figure 2-1. Reverse Osmosis System

Section 3 Specifications

Dimensions - Wall and Bench mounted models

Width . . . . . .34.3 cm (13.5”)

Depth . . . . . .42.8 cm (16.9”)

Height . . . . . .49.5 cm (19.5”)

Clearance Requirements

Sides . . . . . .22.9 cm (9”) minimum for servicing.

Above . . . . 7.6 cm (3”) minimum for removal of the top cover.

Front . . . . 12.1 cm (4.75”) minimum for opening the front door.

Cartridge and membrane replacement is easily accomplished upon opening the front and side doors.

Feed Water Requirements[1]

Types[1] . . . . . .Tap (Potable)

Turbidity . . . . . .1.0 N.T.U. maximum.

Pressure Range . . . . . 2 bar (30 psig) to 3.79 bar (54.9 psig) maximum

Temperature Range . . . . . .1-35°C (34-95°F)

Inlet Flow Requirements . . . . . .40 lph

pH 3-10

TDS . . . . . .800 (Max. ppm as CaCO3)

Silt Density Index . . . . . .<5%

Free Chlorine . . . . . .<3 ppm

Langlier Saturation Index . . . . . .<1

Iron (Total as Fe) . . . . . .<0.5 ppm

Silica . . . . . .<30 ppm

Product Water

Model D12671

Flow Rate[2] . . . . . .6 lph, ±15% (1.6 gph)

Recovery[2] 10-20%

Membrane Performance [2]

	Rejection
Inorganic (minimum)	>90%
Inorganic (typical)	>95%
Particles	>99%
Bacteria	>99%
Dissolved Organics (>100 MW)	>99%

[1] Feed water suitability must be determined by a water analysis.

[2] 500 ppm NaCl feedwater solution @ 25°C (77°F), @ 2 bar (30 psig), 10% recovery. Flow rate and recovery will decrease with lower water temperature and pressure. We recommend the use of a hot water mixing valve before the RO system for water cooler than 15°C (59°F).

Electrical Requirements

The Thermo Scientific RO is equipped with a power cord to be plugged into an electrical outlet of the appropriate voltage.

Voltage and Frequency (Nominal)

Model D12671 . . .100-240 VAC, 50/60 Hz, 1 phase

Environmental Conditions

Operating: 4°C - 49°C; 20% to 80% RH, non-condensing.

Installation Category II (over-voltage) in accordance with IEC 664.

Pollution Degree 2 in accordance with IEC 664.

Altitude limit: 3,500 meters.

Storage: -25°C to 65°C; 10% to 85% relative humidity (RH).

Declaration of Conformity

We hereby declare under our sole responsibility that this product conforms with the technical requirements of the following standards:

EMC:

EN 61000-3-2 Limits for Harmonic Current Emissions

EN 61000-3-3 Limits for Voltage Fluctuations and Flicker

EN 61326-1 Electrical Equipment for Measurement, Control and Laboratory Use ; Part 1: General Requirements

Safety:

EN61010-1 Safety Requirements for Electrical Equipment for Measurement, Control, and Laboratory use; Part I: General Requirements

per the provisions of the Low Voltage Directive 2006/95/EC and the Electromagnetic Compatibility Directive 2004/108/EC.

Copies of the Declaration of Conformity are available upon request.

Section 4 Unpacking and Installation

1. Remove the unit from its shipping container. Remove all contents carefully. Ensure the following parts are removed from the packaging materials before discarding.

    1) Membrane(s) (FL1265X1)

    2) Prefilter (D502113)

    3) Carbon Filter (D502115)

    4) MPS cartridge (D502114)

    5) Wall bracket (BC1190X12)

    6) Parts bag with feed, product, and reject water tubes included with fittings.

        a. Feed water assembly - TU1119X7

        b. Product tube - TU550X5

        c. Reject tube - TU1190X12

        d. Elbow fittings - 03033 (3/8” tubing x 1/4” NPTM)

            - PMX80 (3/8” tubing x 3/8” NPTM)

    7) Power cords

2. Put the Thermo Scientific RO system on a bench.

Choosing a Site

The RO system features an optional remotable control panel display which allows the system to be mounted almost anywhere within the laboratory using accessory kit AY1265X1. Your RO system must be located within six feet of an electrical outlet appropriate for your unit, within ten feet of your feed water supply and within six feet of an atmospherically vented drain. If you are using the accessory 30 Liter Storage Reservoir (part number D12681), the reservoir must not be mounted farther than ten feet away from the RO system.

Use the wall bracket for wall mounted systems as a template to drill mounting holes. (The RO system does not include screws and fasteners for mounting.) Allow a minimum of 22.9 cm (9”) clearance on all sides of the unit for servicing, 7.6 cm (3”) on top for top cover removal and 12.1 cm (4.75”) in front for opening the door.

Caution Wall composition, condition and construction, as well as fastener type, must be considered when mounting this unit. The mounting surface and fasteners selected must be capable of supporting a minimum of 68 kg (150 lbs.) Inadequate support and/or fasteners may result in damage to mounting surface and/or equipment. If you are unsure of mounting surface composition, condition and construction or correct fasteners, consult your building maintenance group or contractor. ▲

Warning Do not locate the Thermo Scientific RO system directly over equipment that requires electrical service. Routine maintenance of this unit may involve water spillage and subsequent electrical shock hazard if improperly located.

Do not use in the presence of flammable or combustible materials; fire or explosion may result. The device contains components which may ignite such materials. ▲

Note It is important that the storage reservoir outlet to any ultrapure system such as the Nanopure, be at the same level or higher than the inlet of the Ultrapure system. ▲

The Thermo Scientific RO utilizes two different types of fittings. Please refer to the installation sections when necessary.

Tubing Adapter Installation

These instructions will be needed when making connections at the inlet water supply, atmospheric drain and at a storage reservoir.

1. Completely disassemble the fitting. Refer to Figure 2 to familiarize yourself with the names of the component parts.

2. Make sure the tubing is cut off reasonably square and that no plastic burrs or ridges are present.

3. Place the grab ring and backup ring in the hex nut in the order and orientation shown in Figure 4-1. Thread the nut into the adapter. DO NOT use the o-ring at this time.

4. Push the tubing through the nut until it bottoms out on the adapter.

5. Remove the adapter nut and tubing. Place the o-ring over the tubing. Be careful not to push the backup ring or grab ring further back on the tubing when installing the o-ring.

6. Install the hex nut on the adapter and hand-tighten.

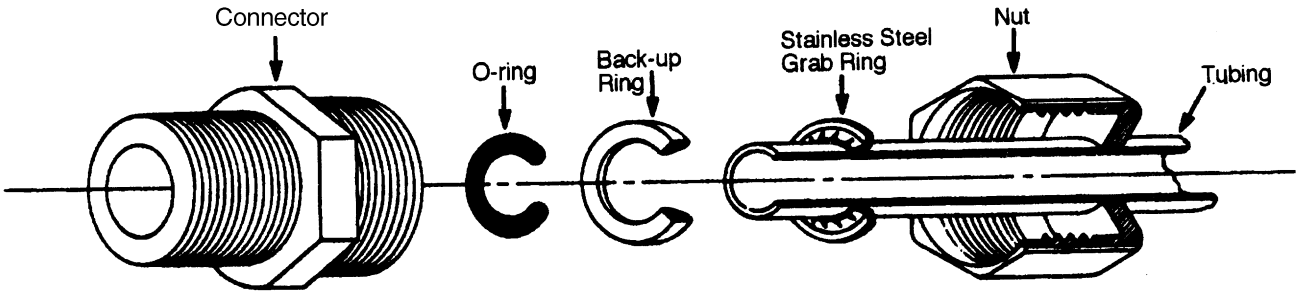

Figure 4-1. Tubing Adapter

Tubing Installation

The following instructions will apply to push to connect type fittings when you need to install the membranes and to attach a piece of tubing to your RO system during installation, unless otherwise noted in the installation instructions.

To make tubing connections:

1. Make sure the tubing is cut off reasonably square and that no plastic burrs or ridges are present.

Tubing Installation (continued)

2. *Mark the length of insertion from end of tube.

Tube size	Insertion length
1/4 O.D.	1.75 cm (11/16")
3/8 O.D.	1.9 cm (3/4")

3. Wet the tube end with water and insert tube straight into fitting until it bottoms out on interior shoulder and insertion mark is no longer visible.

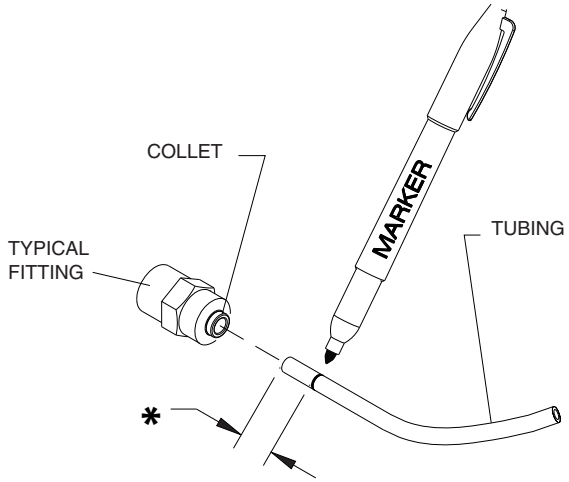

Figure 4-2. Tubing Installation

Tubing Removal

1. Using the tool provided, push the collet toward the body and pull on the tubing to release the tube.

Note Figure 3 & 4 will be used at the membrane, as well as connections at product water outlet (to storage) and reject water (atmospheric drain). ▲

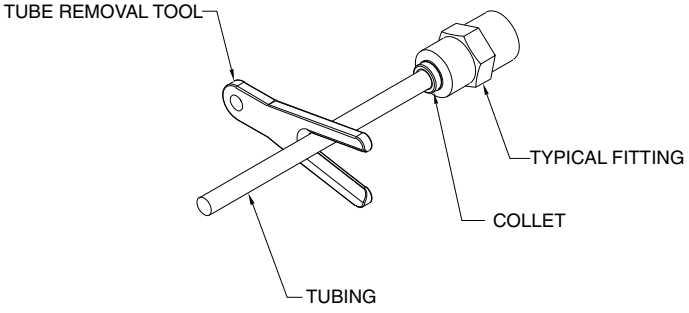

Figure 4-3. Tubing Removal

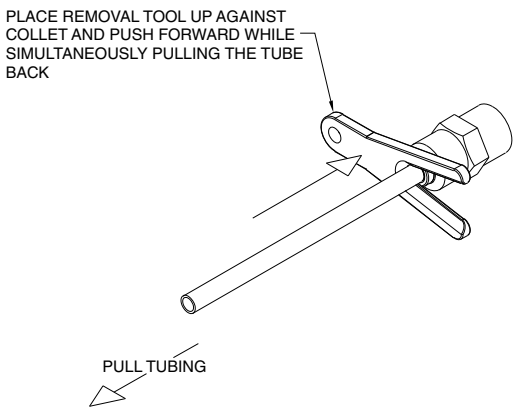

Quick Disconnect Fittings

These fittings are found on the prefilter, carbon and MPS cartridge, as well as the water inlet. See Figure 4-4.

To insert the cartridges or inlet tubing:

1. Press on the metal thumbpad on the unit to ensure the fitting is open.
2. Insert male adapter into fitting until you hear a click. Gently pull on the cartridge or tubing to ensure it is secure.
3. To remove cartridges or tubing, press the metal thumbpad to release fitting and pull adapter out.

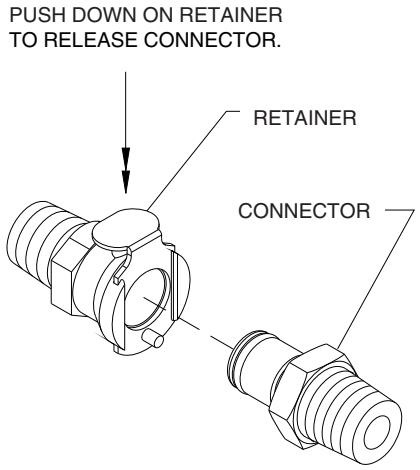

Figure 4-4. Quick Disconnect

Bench Mounting

1. Place RO system on a bench top that is accessible to water, atmospheric drain and electricity, and is convenient to your work area, noting clearance requirements.

Wall Mounting

Install the RO system on a wall in a convenient location that is accessible to water, atmospheric drain and electricity.

Caution Wall composition, condition and construction, as well as fastener type, must be considered when mounting this unit. The mounting surface and fasteners selected must be capable of supporting a minimum of 68 kg (150 lbs.) Inadequate support and/or fasteners may result in damage to mounting surface and/or equipment. If you are unsure of mounting surface composition, condition and construction or correct fasteners, consult your building maintenance group or contractor. ▲

Wall Mounting (continued)

Warning Do not locate the Thermo Scientific RO system directly over equipment that requires electrical service. Routine maintenance of this unit may involve water spillage and subsequent electrical shock hazard if improperly located.

Do not use in the presence of flammable or combustible materials; fire or explosion may result. The device contains components which may ignite such materials. ▲

1. Locate the wall bracket packed separately from the unit.
2. Using the wall bracket as a template, locate and drill the mounting holes in the wall. A minimum of four (customer-supplied) fasteners will be required — two on the top and two on the bottom.
3. Attach the wall bracket to the wall using the customer-supplied fasteners.
4. Remove the locking screws on each side of the wall bracket.
5. Pull the two locking slides on each side of the wall bracket out as far as they will go.

Note Prior to installing the RO system on the wall or bench, it is recommended that all cartridges and membranes are installed. See the appropriate section of this manual for installation of cartridges and membranes. ▲

6. Hang the RO unit on the wall bracket by sliding the mounting pins into the wall bracket slots.
7. Push the locking slides on each side of the wall bracket in as far as they will go.
8. Replace the locking screws.

Cartridge / Membrane Installation

Your RO system has been shipped with a prefilter, carbon filter, MPS cartridge and one membrane that you will install. To prepare your RO for operation, disconnect the unit from the power supply if connected.

Prefilter Installation

Particulates can damage your membrane, resulting in premature membrane failure. Therefore, your Thermo Scientific RO system uses a prefilter to remove particulates from your feed water. Install the prefilter cartridge as follows:

1. Open the front left door.

2. Remove the prefilter (Part Number D502113) from its packaging and wet the o-rings with water.

3. Insert the prefilter straight into the left position upper and lower quick disconnects and push until firmly connected. For easier installation, connect bottom first.

MPS Cartridge Installation

The MPS cartridge contains a slow dissolving anti-scalant material. The anti-scalant material combines with water to prevent scale buildup on the membrane surface. Install the MPS cartridge as follows:

1. Remove the MPS cartridge (Part Number D502114) from its packaging and wet the o-rings with water.

2. Insert the MPS straight into the middle position upper and lower quick disconnects and push until firmly connected. For easier installation, connect bottom first.

Note Figure 4-5 shows the correct sequence of prefilter, MPS and carbon filter. Cartridges must be installed in correct order to operate properly. ▲

Note It is important to replace the MPS cartridge once the material is half dissolved. ▲

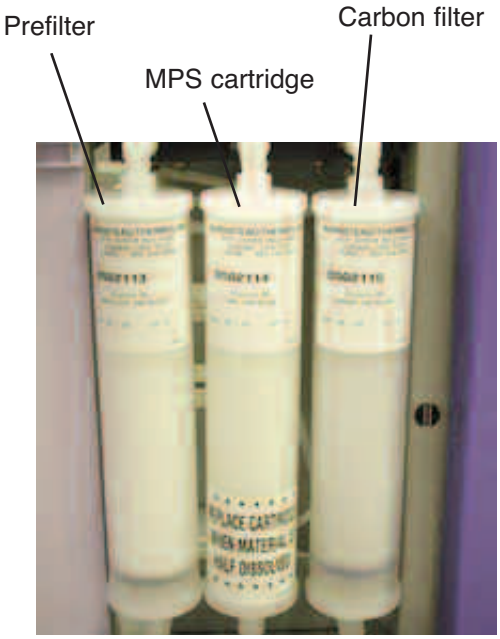

Figure 4-5. Cartridge Installation Order

Carbon Filter Installation

Chlorine can also damage your membrane, resulting in premature membrane failure. Therefore, your RO system uses an extruded carbon filter to remove chlorine from your feed water. Install the carbon cartridge as follows:

1. Remove the carbon filter (Part Number D502115) from its packaging and wet the o-rings with water.
2. Insert the carbon filter straight into the right position upper and lower quick disconnect and push until firmly connected. For easier installation, connect bottom first.

Membrane Installation

1. Remove the RO membrane from its packaging. Note the location of the FEED, PRODUCT, and REJECT connections on the housing. The correct orientation for the installed membrane will be vertical with the FEED connection down.
2. Open the left side door on the RO system.
3. Locate the three unconnected tubes labeled FEED, PRODUCT, and REJECT. Refer to **Tubing Installation** and mark tubing 1.75 cm (11/16”) from end.
4. Note the orientation of the membrane housing and install the unconnected tubes into the corresponding connectors on the membrane housing. To do so, first wet the tube end with water and push the tube end firmly into the connector. Start with the FEED followed by the PRODUCT and finally the REJECT.

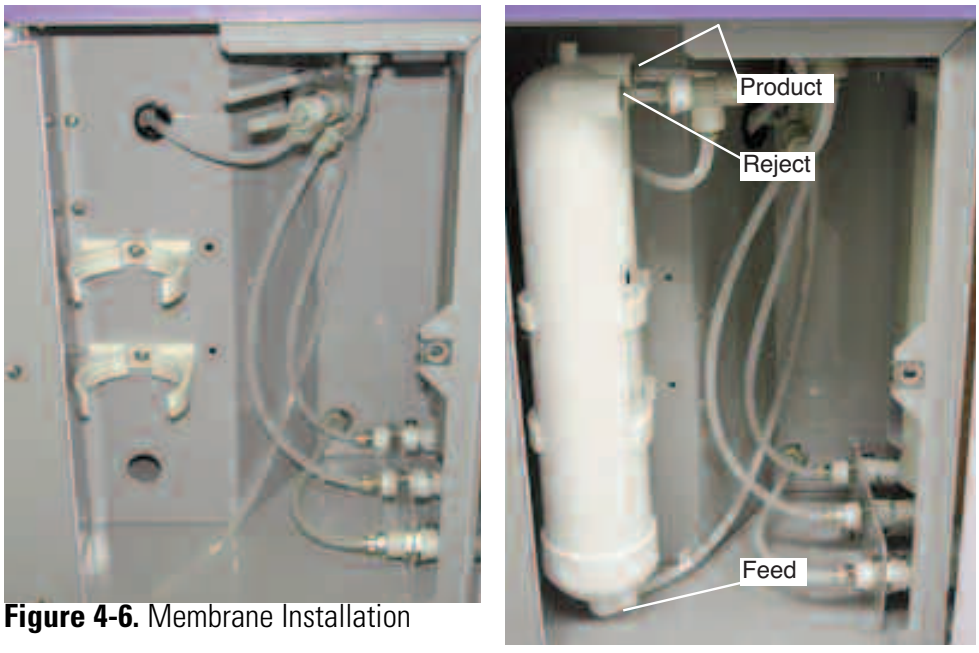

Figure 4-6. Membrane Installation

Membrane Installation (continued)

5. Note the orientation of the membrane housing and press the housing into the two holding clips.

6. The door can remain open until the unit is operating and you have checked for possible water leaks at the membrane connections.

Figure 4-7. Membrane Housing Label

Water Connections

Note Do not connect the product water tubing to a storage reservoir until the startup membrane flush procedure has been performed on the RO. ▲

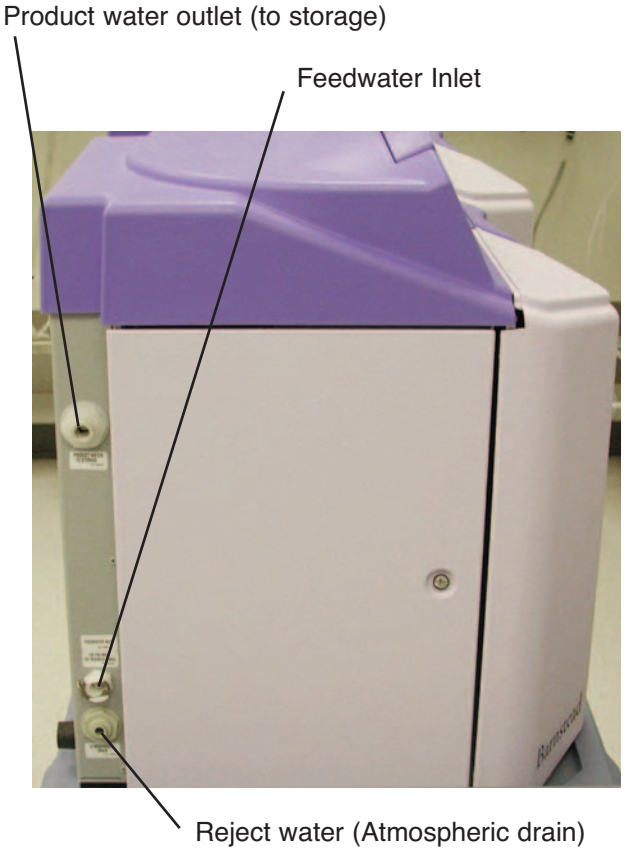

Figure 4-8. Water Connections

Feed Water Connection

1. Locate the length of .95 cm (3/8”) O.D. tubing provided with a quick disconnect insert on one end and a .95 cm (3/8”) O.D. X .64 cm (1/4”) NPT tubing adapter on the other.

2. Install the tubing adapter onto your incoming water line. Refer to tubing installation. We recommend a customer-supplied shutoff valve be installed in your feed water line. The quick disconnect insert will be inserted into the feed water inlet on the lower left side of the RO system during the Initial Operation.

Reject Water Connection

1. Locate the reject water tubing. This is the piece of 0.64 cm (1/4”) O.D. tubing that has a 0.64 cm (1/4”) O.D. x 0.64 cm (1/4”) NPT tubing adapter attached to one end.

2. Install the tubing adapter into your atmospheric drain and route the other end to the RO atmospheric drain connector. Mark tubing per tube installation. Wet the tube end with water and firmly push to install into connector.

Product Water Connection

1. Locate the .95 cm (3/8”) O.D. tubing without connectors attached, mark tubing per tube installation, wet the tube end with water and install into the product water to storage connector firmly. Then route the other end of the tubing to drain, temporarily until membrane flush is completed.

Section 5 Controls

The main power switch on the Thermo Scientific RO system is located on the lower right side of the unit (as you face the front of the unit). This switch should be turned off when any maintenance is to be performed on the unit.

Control Panel

The RO system is controlled through a re-locatable panel that incorporates four switches to control various functions: ENTER/RESTART, FLUSH, MEMBRANE timer reset and CARBON timer reset.

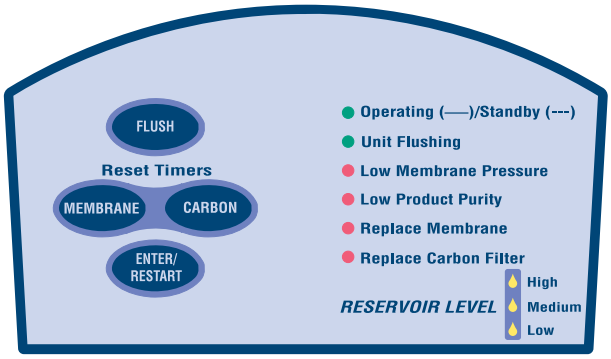

Figure 5-1. Control Panel

9 LEDs illuminate to provide system operational status as follows:

- Operating/Standby: Solid on if the system is running. Slow blink if the system is in Standby.
- Unit Flushing: Solid on indicates the system is currently flushing.
- Low Membrane Pressure: N/A for 6 lph systems.
- Low Product Purity: Solid on indicates the % rejection between incoming water and product water is lower than expected. Factory set at 75% rejection.
- Replace Membrane: Solid on when the operational time of the membrane has been in use for over 12 months.
- Replace Carbon Filter: Solid on when the operational time for the filter has exceeded its useful life.
- 3 Reservoir LEDS: Provides an indiction of the level of product water in the storage reservoir.

Note When using reservoirs other than Model D12681, the “low” reservoir LED will never illuminate. ▲

Switches

When the main power switch (on the lower right side of the unit) is on, the 4 switches on the control panel function as follows.

FLUSH (followed by ENTER/RESTART) places the unit into a 4-minute flush.

MEMBRANE (followed by ENTER/RESTART) resets the membrane operational timer to zero.

CARBON (followed by ENTER/RESTART) resets the carbon operational timer to zero.

ENTER/RESTART is used to select an operation, or restart the unit if it is in standby mode and reservoir high LED is not illuminated.

Electrical/Reservoir Connections

RESERVOIR CONNECTION - Utilized with 30 liter reservoir - D12681

REMOTE DISPLAY - Utilized when control panel is installed in a remote location.

ALTERNATE RESERVOIR CONNECTION - Black jumper plug must remain in place unless either a 60 liter, 100 liter or other Thermo Scientific reservoir is being installed.

Note The black protective cover on the remote display connector should remain in place when the display is not remotely located. ▲

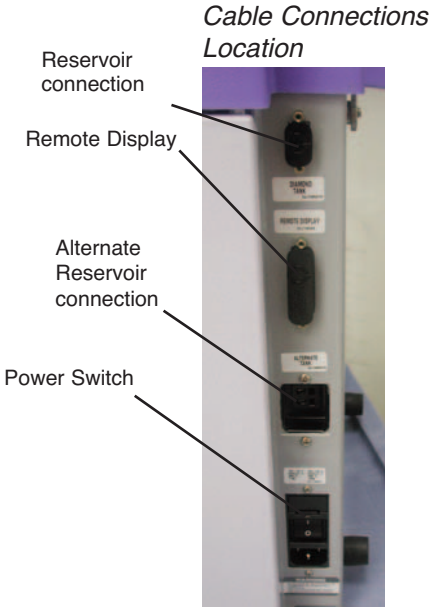

Figure 5-2. Cable Connections

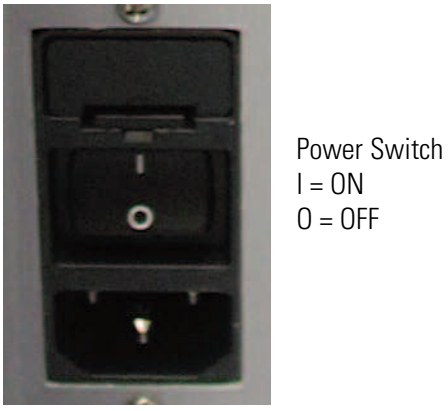

Figure 5-3. Power Switch

Install Control Panel in Remote Location

For your convenience, the control panel can be removed from the unit and mounted at a location within 3.1 m (10 ft.) of the unit. Refer to Figure 5-4 on the following page. To remove the control panel from the unit:

1. Turn the unit OFF and disconnect it from the power supply.

2. Slide the control panel upward about 0.64 cm (1/4”) to 0.95 cm (3/8”) - just enough to clear connector on top cover, pull forward, and remove. (The control panel fits tightly in the unit so it may be difficult to remove. It may be necessary to use a flat head screwdriver and gently pry up.)

3. Replace the control panel with the blank panel provided with the accessory kit (AY1265X1) to protect the electrical connector.

4. After selecting a convenient location, use the wall bracket as a template, locate and drill the mounting holes in the wall. A minimum of two (customer-supplied) fasteners will be required. Attach the wall bracket to the wall using the customer-supplied fasteners.

5. Locate the 25-pin connector on the right side of the unit. Remove the protective black plastic cover and store it for future use if the control panel is returned to the top cover.

6. Locate the 3.1 m (10 ft.) 25 pin M-F cable provided with the accessory kit; attach the female end to the 25 pin connector on the back top right of the unit, and the other end to the connector on the bottom of the control panel.

7. Tighten the cable screws on each end to secure the cable to the unit and control panel.

8. The control panel may now be mounted on the wall bracket installed in Step 4.

Note The removable control panel was not designed to be repeatedly removed from the unit, therefore, you may experience difficulty when attempting to remove it. It is recommended that the control panel be permanently mounted in a remote location, or remain intact with unit. ▲

Caution Repeated removal and replacement of the control panel from the top cover may eventually cause it to become damaged. ▲

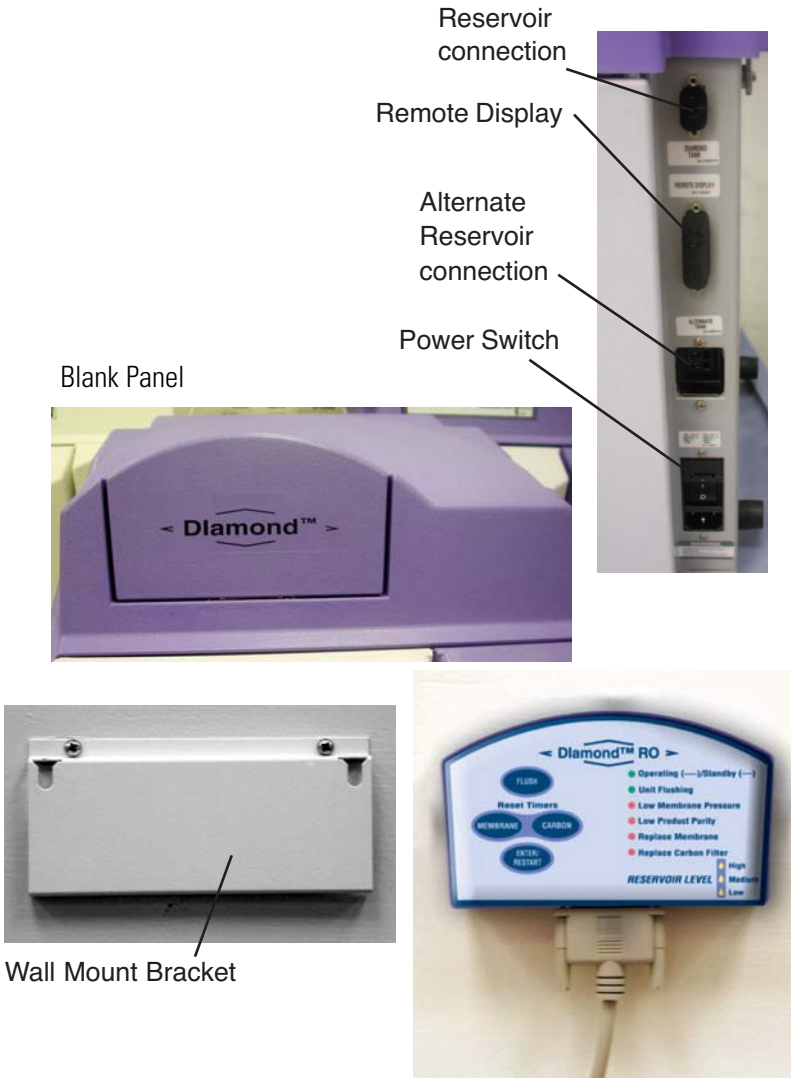

Figure 5-5. Components

Section 6 Initial Operation

A 120V power cord with (2) 1.6 amp fuses and 240V power cords with (2) 0.63 amp fuses are provided with the unit. Choose the cord that applies to you.

The Thermo Scientific RO is not shipped with fuses installed in the fuse draw of the power entry module. Before connecting the power cord to the power entry module, select the appropriate cord with fuses and install the proper fuses in the fuse draw. Refer to the Figure 6-1 below. Check to be sure main power switch is in the off position and install the power cord into the power entry module and into a properly grounded electrical outlet.

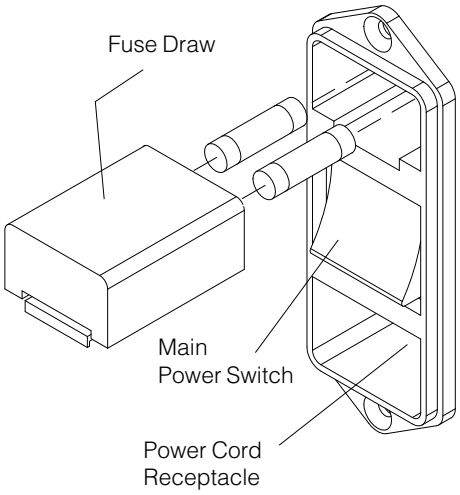

Figure 6-1. Electrical Connections

Initial Operation

1. During initial operation, be sure Product Water Storage tubing is temporarily routed to drain for proper rinsing of RO membrane.

2. Connect water supply to unit by inserting the quick disconnect into the feed water inlet on the lower left side of the RO system. Turn on main water supply. Turn the system power on by depressing the Main Power Switch to the "I" position. The 9 LEDs will sequentially flash, testing the LEDs to make sure they are not burned out.

3. The Operating/Standby, replace membrane and replace carbon filter LEDs will turn solid on. The first 30 seconds the inlet and flush solenoid valves open and water moves through the system. After the 30 seconds, the flush valve will close and the unit will operate normally and produce product water.

4. Reset the membrane and carbon timers. See Section 7.

5. Membrane Rinse - Allow the unit to operate and send water to drain for a minimum of two hours. This will rinse the membrane of its preservatives. It is possible that during this time the "Low Product Purity" LED may illuminate.

6. It is recommended that prior to connecting product water tubing to storage reservoir, the flowrate be measured and recorded in the operating log, toward the end of this manual, along with the other operation data.

7. After the membrane rinse, the unit can be shut down and the product water tubing can be connected to the storage reservoir. Two elbow adapters are provided to allow the RO system to be connected to various reservoirs. Refer to the storage reservoir manual.

8. Connect float cable, check for leaks, etc.

Warning This device is to be used with potable water feeds only. ▲

Warning Use a properly grounded electrical outlet of correct voltage and current handling capacity. ▲

Warning Discard the RO membrane product water for at least two hours during the initial operation. The membrane contains a preservative solution to prevent microbiological growth. ▲

Section 7 Normal Operation

Below is a brief description of the normal automatic operation of the Thermo Scientific RO system. If the unit does not operate as described below, refer to the troubleshooting guide.

When the main power switch is activated, the following events will occur:

1. All LEDs will flash sequentially, to indicate that they work.

2. After approximately 5 seconds, the solenoid valves are energized. The inlet valve opens, supplying the RO system with water. The flush valve also opens, diverting the water to drain.

3. After 30 seconds, the flush solenoid valve closes and the RO system begins making product water and sending it to the storage reservoir.

4. The microprocessor tracks operating time and at a pre-selected interval illuminates the “replace carbon filter” light, signifying that the carbon cartridge should be replaced.

5. When the reservoir is full and the RO system is in Standby mode, a clock is activated, which energizes the RO system for 4 minutes every 3 hours and 56 minutes. This ensures that water will not stagnate on the membrane surface. The majority of the water produced during this 4 minute cycle will divert to the drain.

Flushing the Membrane

Note The Reverse Osomosis System flushes automatically in Standby for 4 minutes, after 3 hours and 56 minutes in Standby (reservoir full). This prevents stagnant water from damaging the membrane. A flush can also be initiated manually. ▲

Manual 4 Minute Flush

1. Press the “FLUSH” button on the control panel.
2. The “Unit Flushing” LED light will begin blinking.
3. Press the “ENTER/RESTART” button while the “Unit Flushing” LED light is blinking.
4. While the unit is flushing, the “UNIT FLUSHING” and “OPERATE/STBY” LED lights will remain lit and the membrane pressure will drop.
5. The flush can be terminated at any time by pressing the Flush button.

Resetting the Carbon Timer

The red “Replace Carbon Filter” light on your control panel illuminates when it is time to replace the carbon filter. This light illuminates after the operation time reaches the chlorine level set point.

1. Press the “CARBON” button on the control panel.
2. Press the “ENTER/RESTART” button while the “Replace Carbon Filter” LED light is blinking to reset the carbon timer.

Note Sustained exposure to high chlorine levels can damage the RO membrane(s). It is highly recommended to replace the carbon filter when indicated by the “Replace Carbon Filter” LED. ▲

Resetting the Membrane Timer

The red “Replace Membrane” light on your control panel illuminates when it is time to replace the membrane. The membrane light illuminates after approximately 12 months of use.

1. Press the “MEMBRANE” button on the control panel.
2. Press the “ENTER/RESTART” button while the “Replace Membrane” LED light is blinking to reset the membrane timer.

Pressure Gauges

There are 4 pressure gauges on the Thermo Scientific RO system. The functions of the gauges are to provide you the necessary information, to monitor system performance as well as when certain maintenance procedures should be accomplished. The pressure gauges are located in the inside of the right front door. The 4 gauge functions are as follows:

1. Prefilter Inlet - Provides you with incoming water pressure and is used in conjunction with the prefilter outlet gauge to determine when it is time to change the prefilter.

2. Prefilter Outlet - Provides the pressure reading of the water exiting the prefilter. If there is a 5 psig pressure differential between this reading and the prefilter inlet reading, or if there are visible particulates in the second position, MPS filter, the prefilter should be replaced.

3. Carbon Outlet - Provides the pressure reading of the water exiting the carbon cartridge. If there is a 10 psig pressure differential between this reading and the prefilter outlet reading, the carbon filter should be replaced. The carbon filter should also be replaced when the “Replace Carbon Filter” LED illuminates.

4. Membrane Pressure - Provides a reading of the membrane pressure. The gauge should read 40 psig, ±10 psig, during normal operation.

Standby Mode

When the water level reaches the top float of the Storage Reservoir, or other reservoirs with properly configured float switches, the RO unit goes into standby.

When the water level falls below the middle float in the 30 liter storage reservoir or lower float in the 100 liter reservoir or other auxiliary tank, the RO system resumes normal automatic operation. Pressing the ENTER/RESTART button when the unit is in Standby and the Reservoir High LED is not lit will cause the unit to enter operating mode. The display’s green “Operating/Standby” LED light will blink when the storage reservoir is full, indicating the unit is in standby. If the unit is idle for 3 hours 56 minutes during the “Standby Mode,” the unit automatically performs a 4-minute membrane flush. The display’s green “Unit Flushing” LED light will be lit during this time.

Note The RO system is designed to be energized at all times. Do not turn off the RO system during nonwork hours. Doing so will allow bacterial growth and may damage the RO membrane(s). ▲

Section 8 Maintenance

Wipe exterior surfaces with lightly dampened cloth containing mild soap solution.

Warning Disconnect from the power supply prior to maintenance and servicing. Refer servicing to qualified personnel. ▲

Warning To avoid electrical shock, always:

1. Use a properly grounded electrical outlet of correct voltage and current handling capacity.
2. Do not locate the RO unit over equipment that requires electrical service. Routing maintenance of this unit may involve water spillage and subsequent electrical shock hazard if improperly located.
3. Replace fuses with those of the same type and rating.
4. Disconnect from power supply prior to maintenance and servicing.

Main Fuse Replacement

1. Turn off the RO system and disconnect it from the power supply by removing the power cord directly below the I/O switch. Locate the fuse drawer above the power cord receptacle.
2. Pull out the fuse drawer located in the power entry module.
3. Remove old fuses and replace with fuses of the same type and rating. See Parts List.
4. Replace fuse drawer.
5. Reattach the power cord and reconnect the unit to the power supply.
6. Operate normally.

Membrane Replacement

A variety of factors will determine the service life of the RO membrane. With proper maintenance and monitoring, the membrane should last a minimum of 1 year.

To replace the membrane, ensure that the power and water are disconnected from the unit. Have a container ready as the membrane will have water inside.

1. Remove the old membrane by disconnecting the reject and product tubing from the top of the membrane and the feed water connection from the bottom. See Section 4 for tubing removal instructions.

2. Install the new membrane by following the “Membrane Installation” section of this manual.

3. Disconnect the product to storage tubing at the reservoir and route to drain.

Warning Discard the RO membrane product water for at least two hours during the initial operation. The membrane contains a preservative solution to prevent microbiological growth. ▲

4. Membrane Rinse - Restart unit and allow it to operate and send water to drain for a minimum of two hours. This will rinse the membrane of its preservatives. It is possible that during this time the “Low Product Purity” LED may illuminate.

5. It is recommended that prior to connecting product water tubing to the storage reservoir, the flowrate be measured and recorded in the operating log.

6. After the membrane rinse the unit can be shut down and the product water tubing can be connected to the storage reservoir, connect float cable, check for leaks, etc.

7. Reset the membrane timer by following the “Resetting the Membrane Timer” section included in this manual.

Prefilter Replacement

The prefilter incorporated in your RO unit is designed to remove particles from your incoming water source. It is impossible to predict expected life. It is recommended that the prefilter be replaced when the pressure differential across the prefilter reaches 5 psig, or if there are visible particulates in the second position MPS cartridge. The pressure is displayed on the pressure gauges located on the inside of the RO system right front door. The differential represents the difference between the prefilter inlet and the prefilter outlet.

To replace the prefilter, ensure that all power and water are disconnected from the unit.

1. Remove the prefilter by first pressing the upper and lower thumb buttons on the quick disconnects.

2. Remove the prefilter by pulling the cartridge straight out.

3. Replace the prefilter by following the instructions located in the "Prefilter Installation" section of this manual.

MPS Replacement

The MPS cartridge incorporated in your RO system is designed to prevent scale buildup on the membrane. This cartridge must be replaced when the anti-scalant level is approximately half dissolved. At this point, the quantity of antiscalant entering the water is insufficient to effectively prevent scale accumulation on the membrane. To replace the MPS cartridge, ensure that all power and water are disconnected from the unit.

1. Remove the MPS cartridge by pressing the upper and lower thumb buttons on the quick disconnect fittings.

2. Remove the MPS cartridge by pulling the cartridge straight out.

3. Replace the MPS cartridge by following the instructions located in the "MPS Cartridge Installation" section of this manual.

Carbon Replacement

The carbon filter incorporated in your RO system provides a combination of filtration and chlorine removal. There is a timer built into the RO system which will alert you when the carbon requires replacement. When the “Replace Carbon Filter” light illuminates the carbon filter must be replaced. To replace the carbon filter, ensure that all power and water are disconnected from the unit.

1. Remove the carbon filter by first pressing the upper and lower thumb buttons on the quick disconnect.

2. Remove the carbon filter by pulling the cartridge straight out.

3. Replace the carbon filter by following the instructions located in the “Carbon Filter Installation” section of this manual.

4. Reset the carbon timer by following the “Resetting the Carbon Timer” section of this manual.

Shutdown

If the RO system is to be shut down for an extended period of time, the unit should be completely drained and the cartridges and filters and membrane removed to prevent the growth of bacteria.

Section 9 Troubleshooting

Problem	Possible Causes	Possible Solutions
A pressure gauge is not displaying or never changes pressure readings. (Other gauges do change and properly display system pressures.)	Gauge is bad.	Verify by shutting down system and temporarily exchanging pressure gauge feed tube with an adjacent tube. Restart system: If problem moved with gauge - replace gauge (MEX196). Be sure to change tubing back to original configuration.
"Low Product Purity" red LED illuminated solid ON	Improperly installed membrane	Ensure membrane(s) is installed properly.
	Fouled membrane	Compare feedwater and product water T.I.S. (total ionized solids) If % rejection is less than 75%, replace membrane(s)
	Faulty PCB (ME1265X1) Circuit Board	Replace PCB ME1265X1
	Air bubbles on conductivity probe	Perform system flush
"Low Product Purity" red LED illuminating blinking ON	Faulty PCB (ME1265X1) Circuit Board	Cycle system power
		Replace PCB ME1265X1
Unit is not operating and the Control Panel Reservoir LEDs are blinking.	Reservoir tank floats are feeding back conflicting level indications.	Check to ensure reservoir floats are not stuck.
		Verify float orientation (not required with Therm Scientific tank float stick assembly.)
Leaks at membrane fittings, reject or product water fittings	Burrs on tubing	Remove tubing as shown in Tubing Removal. Check tubing for burrs. Mark tubing and install per Tubing Installation.
	Tubing not installed in fitting completely	

Problem	Possible Causes	Possible Solutions
RO system completely inactive (controls not operating and no LEDs illuminated)	No electrical power to RO	Ensure RO power cord is installed & connected to live power
	Blown Power Entry Fuses	Check/replace fuses. (Refer to fuse replacement for procedure.)
	Display not connected or remote display cable is loose.	Check display connection
	Power Supply fuse blown	Check/replace fuse
No quantity of water flowing	Feedwater supply valve closed	Open feedwater supply valve
	Quick disconnect for feedwater not inserted fully	Insert quick disconnect on feedwater into unit.
	Prefilter or carbon filter plugged	Replace prefilter or carbon filter
	Inlet solenoid valve not open	Replace inlet solenoid (RY1265X2)
	Feed pressure below specification	Increase feedwater pressure
Low quantity of water flowing	Prefilter plugged	Replace Prefilter
	Carbon filter plugged	Replace carbon filter
	Feed pressure below specification	Increase feedwater pressure
Product water is being produced, but low or no water is exiting out the atmospheric drain connection.	Flush solenoid plugged	Perform system flush (refer to “Flushing the Membrane or Membranes” section)
“Membrane Pressure” gauge displaying good pressures, but other gauges are showing 0 or less than zero.	Prefilter plugged	Replace prefilter
	Carbon filter plugged	Replace carbon filter
Decrease in system productivity.	Decrease in feedwater temperature	If flowrate is unacceptable, install hot/cold water mixing valve (D7427) to elevate temp.
	Membrane(s) fouled	Replace membrane(s)
	Low feedwater pressure	Ensure prefilter is not blocked
		Increase feedwater pressure
	Low membrane operating pressure	Refer to troubleshooting of “Low or no quantity water flowing” items.

Section 10 Replacement Parts

Consumables

Consumable parts are those required to support the day-to-day operation of this equipment. We've established two types of consumables; those items that must periodically be replaced to maintain performance (filters, resin cartridges, etc.) and other items of limited life (indicator lights, fuses, etc.) that you can expect to replace on a more or less random basis. Where practical, we recommend the frequency of replacement, or provides information on life expectancy from which you may calculate a replacement interval compatible with your usage pattern.

The replacement of consumable parts is discussed in the Maintenance and Servicing section to assist you in accomplishing your own service.

Description	Catalog No.	Recommended Quantity
Prefilter	D502113	6
Carbon Filter	D502115	6
MPS Cartridge	D502114	3
Mains Fuse, 120V/100V - Slow Blow, 1.6 Amp, 250 Volt	FZX47	2
Main Fuse, 230V - Type T Time-Lag, 0.63 Amp, 250 Volt	FZX54	2
RO Membrane	FL1265X1	2

General Maintenance Parts

General maintenance parts are defined as laboratory level repair parts which do not require great expertise or special tools for installation. We recommend that you stock the general maintenance parts as an aid to ensuring the continued operation of this equipment.

Description	Catalog No.	Recommended Quantity
Quick Disconnect Inlet	CUX11	1

Safety Stock

Quick Disconnect Insert 3/8” tube CUX9 1

For critical applications where performance with minimum downtime is

Description	Catalog No.	Recommended Quantity
Main PC Board	PC1267X1	1
Inlet Solenoid Valve	RY1265X2	1
Reject Solenoid Valve	RY1265X1	1
Pressure Regulating Valve	PM1267X1	1
Pressure Gauge	MEX196	4
Meter PC Board w/probes	ME1265X1	1
Power Supply Fuse, 3.15 Amp, 250V, Type F	AZ9027	1
Jumper Plug, Alternate Tank	CE1265X2	1

required, We recommend that you maintain a local stock of those parts

Optional Accessory Ordering Information

Description	Catalog No.
30L Storage Tank (wall mount)	D12681
Bench Mount Kit for Tank	AY1268X2
Display Remote Mounting Kit	AY1265X1
Hot/Cold Mixing Valve	D7427

listed in the General Maintenance Parts and Safety Stock sections.

Ordering Procedures

Please refer to the Specification Plate for the complete model number, serial number, and series number when requesting service, replacement parts or in any correspondence concerning this unit.

All parts listed herein may be ordered from the Thermo Scientific dealer from whom you purchased this unit or can be obtained promptly from the factory. When service or replacement parts are needed, check first with your dealer. If the dealer cannot process your request, then contact our Technical Services Department.

Flow Diagram

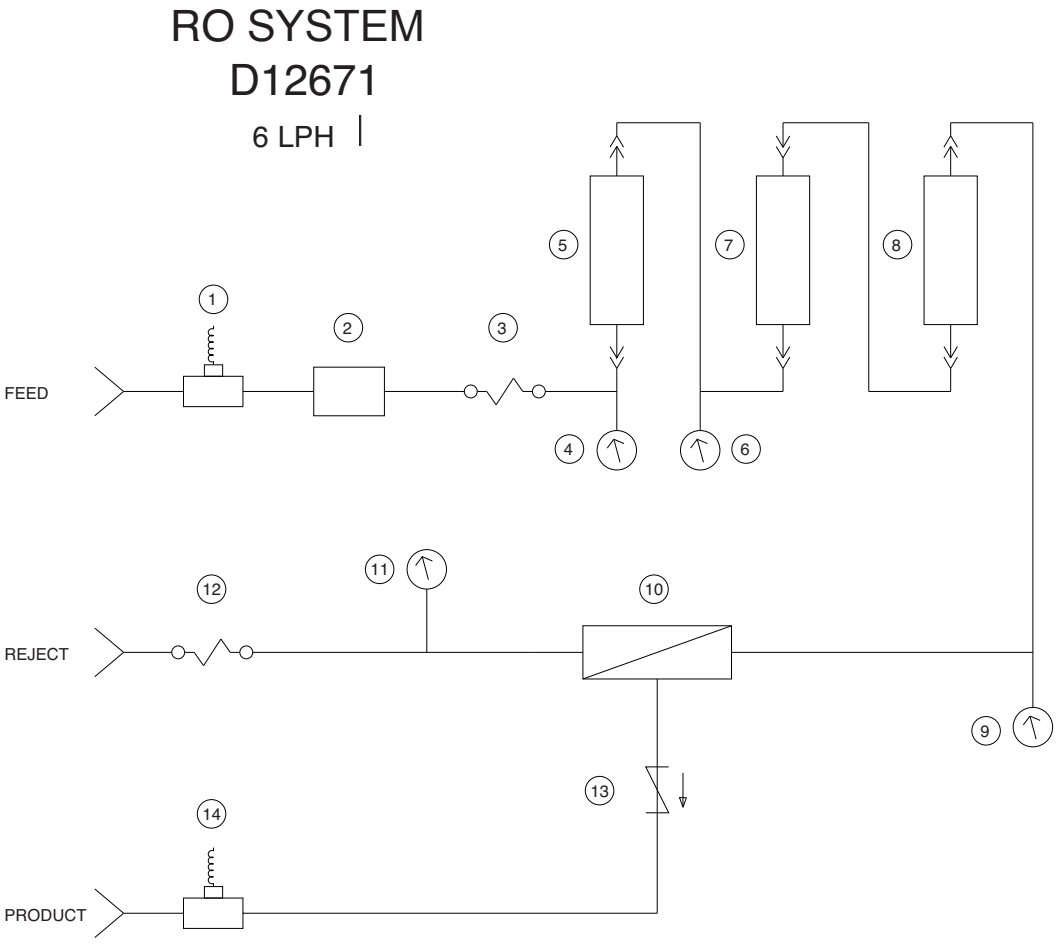

1. Feed comparator Cell
2. Pressure reducing valve
3. Feedwater inlet solenoid
4. Pressure gauge
5. Prefilter
6. Pressure gauge
7. MPS cartridge
8. Carbon filter
9. Pressure gauge
10. Membrane
11. Pressure gauge
12. Reject solenoid
13. Check valve
14. Product comparator cell

Operating Log

To ensure the Thermo Scientific RO System is working properly, the following operating parameters should be recorded monthly.

	Initial Start-Up							
Date and Time								
Feed Water Temperature								
Product Water Flowrate								
Reject Water Flowrate								
Pressure Prefilter Inlet								
Pressure Prefilter Outlet								
Pressure Carbon Outlet								
Membrane Pressure								

Wiring Diagram

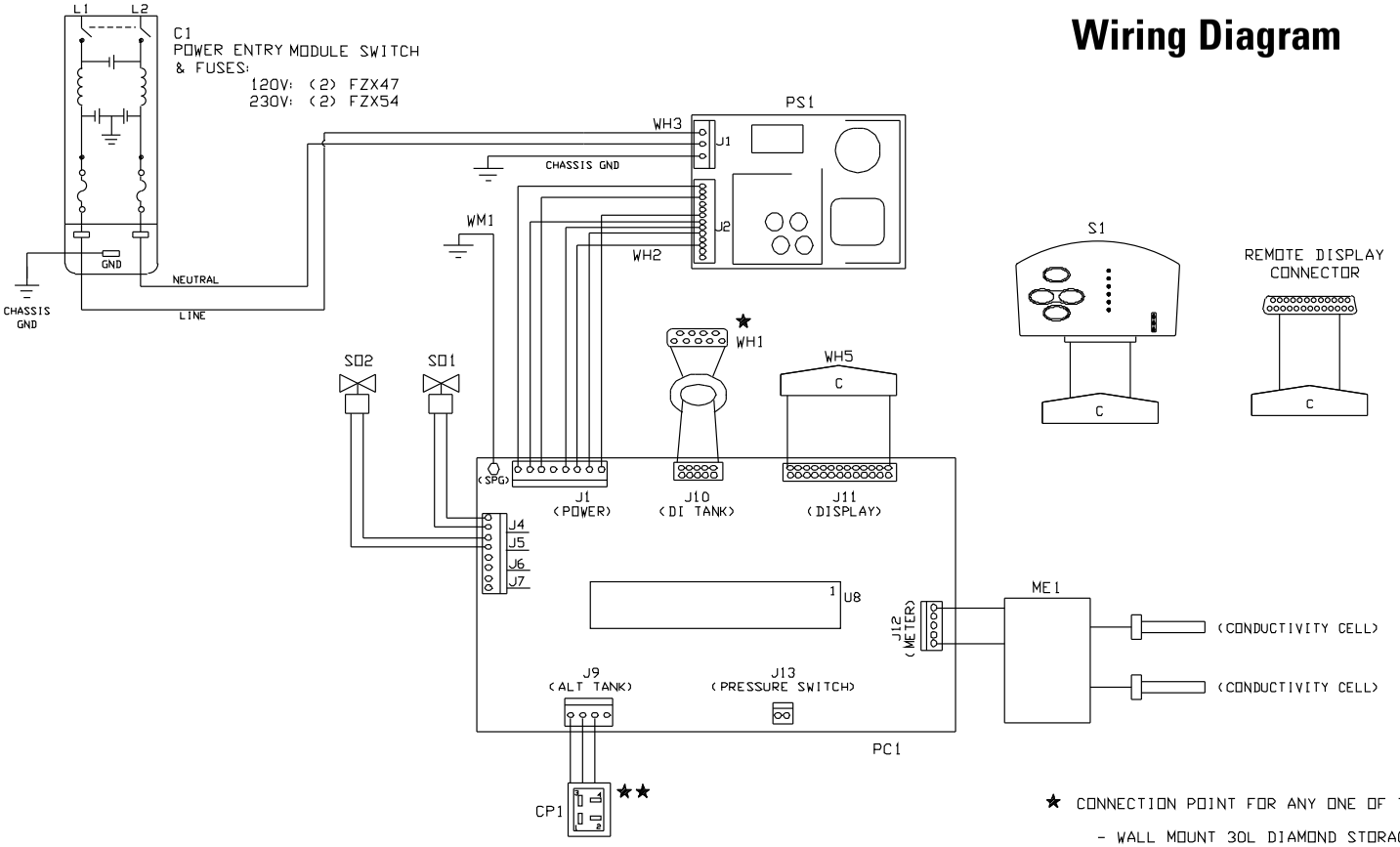

★ CONNECTION POINT FOR ANY ONE OF THE FOLLOWING:

- WALL MOUNT 30L DIAMOND STORAGE TANK (D12681)
- BENCH MOUNT 30L DIAMOND STORAGE TANK (D12681) WITH BENCH MOUNT ACCESSORY KIT (AY1268X2)

★★ CONNECTION POINT FOR ANY ONE OF THE FOLLOWING ALTERNATE TANKS:

- RODPURE INFINITY 60L STORAGE RESERVOIR (D9021)
- ULTRODPURE 100L STORAGE RESERVOIR (D2622)
- DUAL FLOAT STICK ASSEMBLY (16975)

NOTE: OTHER (2) FLOAT PIN CONFIGURATIONS

- PINS 1 AND 4 ON CP1 CORRESPOND TO A "NC" MIDDLE FLOAT
- PINS 2 AND 4 ON CP1 CORRESPOND TO A "NO" HIGH FLOAT
- PIN 3 ON CP1 IS CHASSIS GROUND

DIAGRAM COMPONENT LIST

REF. NO.	DESCRIPTION	MODEL NO. AND OUR PART NO.(s)		
		D12651	D12661	D12671
C1	POWER ENTRY MODULE	CEX183	CEX183	CEX183
CP1	ALTERNATE TANK HARNESS	CE1265X1	CE1265X1	CE1265X1
ME1	METER WITH PROBES	ME1265X1	ME1265X1	ME1265X1
PC1	MAIN CONTROL BOARD	PC1265X1	PC1265X1	PC1265X1
PS1	POWER SUPPLY	TNX116	TNX116	TNX116
S1	MEMBRANE SWITCH	SWX198	SWX198	SWX198
SO1	FLUSH SOLENOID	RY1265X1	RY1265X1	RY1265X1
SO2	INLET SOLENOID	RY1265X2	RY1265X2	RY1265X2
WH1	DIAMOND TANK HARNESS	WH1190X1	WH1190X1	WH1190X1
WH2	DC POWER HARNESS	WH1190X2	WH1190X2	WH1190X2
WH3	AC POWER HARNESS	WH1190X3	WH1190X3	WH1190X3
WH4	PRESSURE SW. HARNESS	WH1190X5	WH1190X5	--------
WH5	DISPLAY HARNESS	WHX19	WHX19	WHX19
WM1	GROUND WIRE	WM1190X2	WM1190X2	WM1190X2

Thermo Fisher Scientific
401 Millcreek Road
Marietta, Ohio 45750
United States

www.thermofisher.com

ThermoFisher
SCIENTIFIC